Topic Skills Practice 6.3

2.1.4 Use manufacturer's catalogues to select appropriate switchgear to sufficiently control and protect the PV power system, in accordance with AS/NZS 3000 and AS/NZS 5033 requirements. Indicate your selections below, using as many rows as necessary:

Control/Protection Device Selection					
#	Type of Device	Nominal Current	Nominal Voltage	Load-Break Capacity	Installation Location
1	Circuit breaker SMA-12 240-6A PV switch BYH32	~~25 A~~ 32A at 40C 29A at 60C	~~230 V~~ 212V dC	☐ Yes ☐ No	MSB solar main switch
2	Circuit breaker 1SMA0	20A	~~230 V~~ 240V	☐ Yes ☐ No	MSB solar
3	PV Disconnector	32A	1000V	☐ Yes ☐ No	inverter
4				☐ Yes ☐ No	
5				☐ Yes ☐ No	

		Teacher/Trainer Initials and Date	
	Feedback: Have your teacher/trainer check your answers		✓

Topic Skills Practice 6.3

2.1.5 Use manufacturer's catalogues to select a suitable d.c. wiring system to be installed between the array and the inverter(s). Indicate your selection below:

d.c. Wiring System Selection	
Installation Method:	Wiring enclosure solar

Current Carrying Capacity				
Insulation Type	Minimum Current Carrying Capacity	Minimum Cable Size	AS/NZS 3008.1.1:2017	
			Table	Column
xlpe	38 A	4 mm	5	15

Voltage Drop				
Volts (V)	Percent (%)	Minimum Cable Size	AS/NZS 3008.1.1:2017	
			Table	Column
1.7 v	~~0.283 %~~ 0.377 %	4 mm	34	6

vd = I x L x 2 x Rc / 1000 Vd% = 1.7 / 600 x 100

		Teacher/Trainer Initials and Date	
	Feedback: Have your teacher/trainer check your answers		✓

2.1.6 Use manufacturer's catalogues to select a suitable a.c. wiring system to be installed betwee the inverter(s) and the connecting switchboard. Indicate your selection below:

a.c. Wiring System Selection	
Installation Method:	Wiring enclosure

Current Carrying Capacity				
Insulation Type	Minimum Current Carrying Capacity	Minimum Cable Size	AS/NZS 3008.1.1:2017	
			Table	Column
PVC	2.5 MM	23 A	10	11

Voltage Drop				
Volts (V)	Percent (%)	Minimum Cable Size	AS/NZS 3008.1.1:2017	
			Table	Column
~~2.6 V~~ 2.566	~~1.13 %~~ 1.06 %	2.5 MM	42	6

Feedback	Have your teacher/trainer check your answers	Teacher/Trainer Initials and Date	✓

2.1.7 Using irradiation data for your current location, estimate the energy yield of the PV system, using the following equation:

$$E_{sys} = P_{array\_STC} \times f_{man} \times f_{dirt} \times f_{temp} \times H_{tilt} \times n_{inv} \times n_{cables}$$

Include your working and answers in the following table. If unsure about estimating certain derating factors, ask your teacher/trainer for assistance.

PV System Derating		
Derating Factor	Determined From	Typical Value
Manufacturing tolerance	Manufacturer's data sheets	0.97
Dirt build up	Estimated based on site conditions	0.95
Operating temperature	Manufacturer's data sheets and site conditions	0.84
Efficiency of system cables	Estimated based on route length, resistivity etc.	0.97
Efficiency of the inverter	Manufacturer's data sheets	0.92

NOTE: f temp = 0.82 yearly irradiation = 1570

Energy Yield Calculation		
Energy yield (E_{sys})	=	9549.96 kWh ~~5954435 Wh~~
Rated output power of the array under STC (P_{array_STC})	=	4620 W ~~5280 W~~
Manufacturing tolerance derating factor (f_{man})	=	0.97
Derating factor for dirt build up (f_{dirt})	=	0.95
Derating factor for temperature (f_{temp})	=	~~0.82~~ 0.99
Total yearly irradiation for the site (H_{tilt})	=	2067 ~~1570~~ kWh/m²
Derating for the efficiency of the inverter (n_{inv})	=	0.98 catalogue
Derating for the efficiency of the system cables (n_{cables})	=	0.97

Working:

	Feedback	Have your teacher/trainer check your answers	Teacher/Trainer Initials and Date ✓

.1.8 Now use your estimated energy yield to determine the specific energy yield, using the ollowing equation:

$$SY = \frac{E_{sys}}{P_{array\_STC}}$$

Specific Energy Yield Calculation		
Specific energy yield (SY) =	2067 ~~1128~~	kWh/kW
Energy yield (E_{sys}) =	9549.96 ~~5954435~~	Wh
Rated output power of the array under STC (P_{array_STC}) =	4620 5280	W

Working:

	Feedback	Have your teacher/trainer check your answers	Teacher/Trainer Initials and Date ✓

Topic Skills Practice 6.3

2.1.9 Calculate the performance ratio of the array using the following two equations:

$$PR = \frac{E_{sys}}{E_{ideal}}$$

$$E_{ideal} = P_{array\_STC} \times H_{tilt}$$

Specific Energy Yield Calculation		
Performance ratio	=	0.867 ~~0.718~~ kWh/kW
Actual energy yield (E_{sys})	=	9549.96 ~~5954435~~ kWh
Ideal energy yield (E_{ideal})	=	11014 ~~8289600~~ kWh

Working:

Topic Skills Practice 6.3

		Teacher/Trainer Initials and Date	
	Feedback: Have your teacher/trainer check your answers		✓

Topic Skills Practice 6.3

3. Completing the Skills Practice

3.1 Skills Practice Review Questions

3.1.1 Complete this section after successfully completing Section 2.

1. List at least four factors that need to be considered when selecting and sizing PV system cable and switchgear.

   Current carrying capacity / voltage drop / impedance/ route length/ installation method

2. What kinds of financial factors can impact the design of a PV power system?

   Stc claims on energy production less power bills

3. What kinds of regulatory factors can impact the design of a PV power system?

   Loss of accreditation id not installed to standards / grid supply impact

	Feedback	Have your teacher/trainer check your answers	Teacher/Trainer Initials and Date

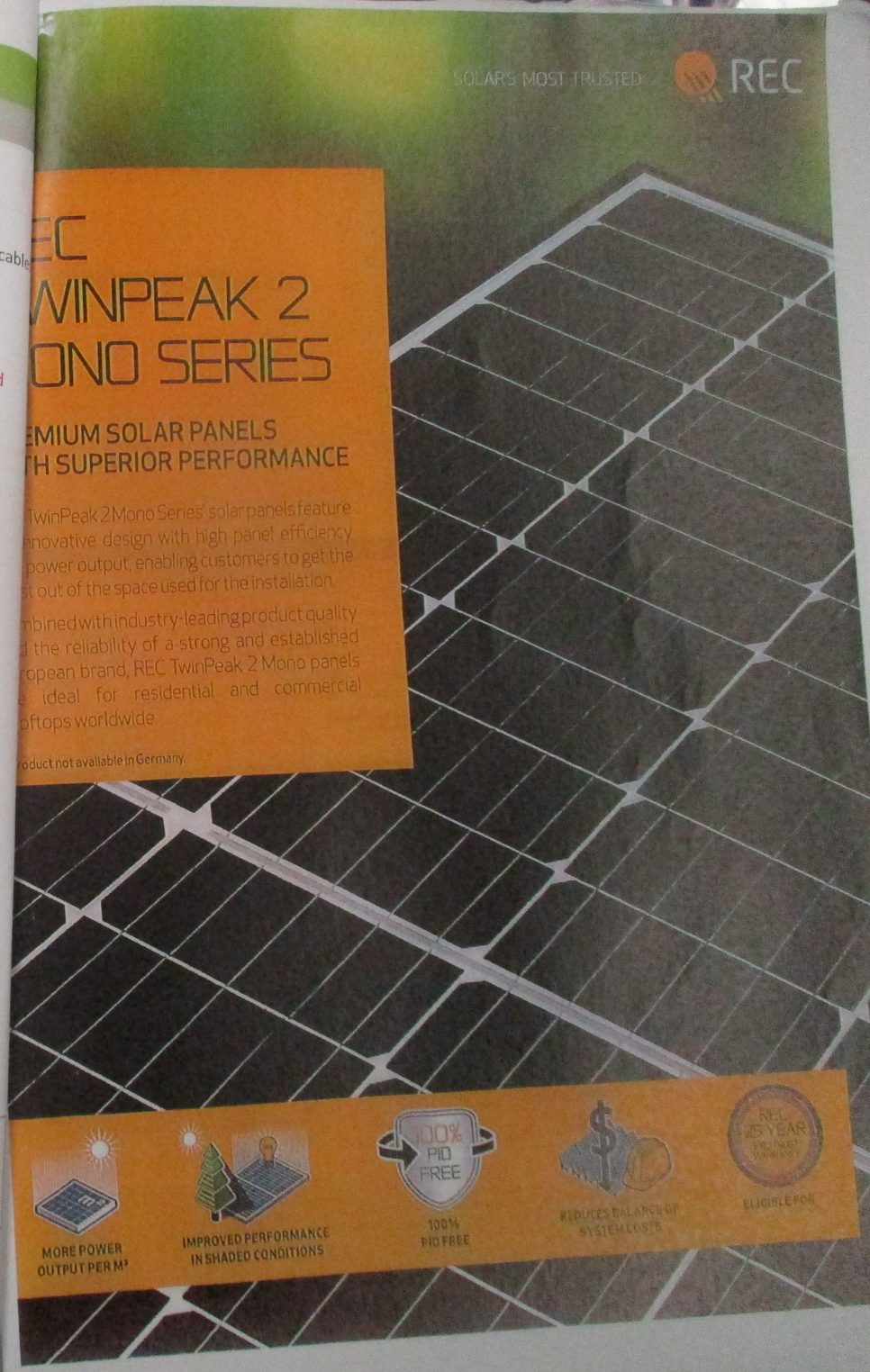

REC TWINPEAK 2 MONO SERIES

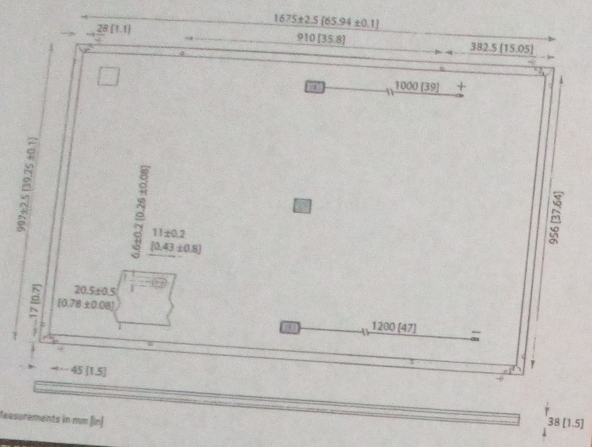

Measurements in mm [in]

19.8% EFFICIENCY

20 YEAR PRODUCT WARR

25 YEAR LINEAR POWER OUTPUT WARRANTY

ELECTRICAL DATA @ STC

Product code*: RECxxxTP2M							
Nominal Power - P_{MAX} (Wp)	300	305	310	315	320	325	330
Watt Class Sorting - (W)	-0/+5	-0/+5	-0/+5	-0/+5	-0/+5	-0/+5	-0/+5
Nominal Power Voltage - V_{MPP} (V)	33.0	33.3	33.5	33.7	33.9	34.0	34.3
Nominal Power Current - I_{MPP} (A)	9.11	9.17	9.26	9.36	9.45	9.56	9.62
Open Circuit Voltage - V_{OC} (V)	38.3	38.8	39.1	39.6	40.0	40.3	40.8
Short Circuit Current - I_{SC} (A)	10.01	10.04	10.07	10.10	10.13	10.15	10.19
Panel Efficiency (%)	18.0	18.3	18.6	18.9	19.2	19.5	19.8

Values at standard test conditions (STC: air mass AM 1.5, irradiance 1000 W/m², temperature 25°C), based on a production spread with a tolerance of P_{MPP}, V_{MPP} & I_{SC} ±3% within one watt class. At a low irradiance of 200 W/m² at least 95% of the STC module efficiency will be achieved.
*Where xxx indicates the nominal power class (P_{MPP}) at STC indicated above.

ELECTRICAL DATA @ NMOT

Product code*: RECxxxTP2M							
Nominal Power - P_{MAX} (Wp)	224	227	231	235	239	242	246
Nominal Power Voltage - V_{MPP} (V)	30.7	31.0	31.2	31.4	31.6	31.7	31.9
Nominal Power Current - I_{MPP} (A)	7.29	7.34	7.41	7.49	7.56	7.65	7.70
Open Circuit Voltage - V_{OC} (V)	35.6	36.1	36.4	36.8	37.2	37.5	38.0
Short Circuit Current - I_{SC} (A)	8.01	8.03	8.06	8.08	8.10	8.12	8.15

Nominal module operating temperature (NMOT: air mass AM 1.5, irradiance 800 W/m², temperature 20°C, windspeed 1 m/s).
*Where xxx indicates the nominal power class (P_{MPP}) at STC indicated above.

GENERAL DATA

Cell type:	120 half-cut mono-Si p-type P 6 strings of 20 cell
Glass:	3.2 mm solar g anti-reflection surface t
Backsheet:	Highly resistant g polyolefin com
Frame:	Anodized al
Junction box:	3-part, 3 bypass diodes, IP6 in accordance with th
Cable:	4 mm² solar cable, 1.0 m in accordance with th
Connectors:	Stäubli MC4 PV-KBT4/PV-KST4 in accordance with IEC 62852, IP68 only when c
Origin:	Made in Sing

MAXIMUM RATINGS

Operational temperature:	-40 ...
Maximum system voltage:	1
Design load (+): snow	3600 Pa (367 kg
Maximum test load (+):	5400 Pa (550 kg
Design load (-): wind	1600 Pa (163 kg
Maximum test load (-):	2400 Pa (244 kg
Max series fuse rating:	
Max reverse current:	

*Calculated using a safety factor
*See installation manual for mounting instruc

TEMPERATURE RATINGS*

Nominal Module Operating Temperature:	44.6°C (±2
Temperature coefficient of P_{MAX}:	-0.37 %
Temperature coefficient of V_{OC}:	-0.28 %
Temperature coefficient of I_{SC}:	0.04 %

*The temperature coefficients stated are linear va

MECHANICAL DATA

Dimensions:	1675 x 997 x 38 m
Area:	1.67 m²
Weight:	18.5 kg

CERTIFICATIONS

IEC 61215, IEC 61730/UL 61730, IEC 62804 (PID)
IEC 62716 (Ammonia Resistance), IEC 61701 (Salt Mist Level 6)
ISO 9001: 2015, ISO 14001: 2004, OHSAS 18001: 2007

take-e-way WEEE-compliant recycling scheme

WARRANTY

	Standard	REC ProTrust
Installed by an REC Certified Solar Professional	No	Yes	Yes
System Size	Any	<25 kW	25-500 kW
Product Warranty (yrs)	20	25	25
Power Warranty (yrs)	25	25	25
Labor Warranty (yrs)	0	25	10
Power in Year 1	97.5%	97.5%	97.5%
Annual Degradation	0.7%	0.7%	0.7%
Power in Year 25	80.7%	80.7%	80.7%

See warranty documents for details. Some conditions apply.

2019 TOP PERFORMER PVEL | DNV·GL PV MODULE RELIABILITY SCORECARD

2020 TOP PERFORMER PVEL | DNV·GL PV MODULE RELIABILITY SCORECARD

REC Group is an international pioneering solar energy company dedicated to empowering consumers with clean, affordable solar power in order to facilitate global energy transitions. Committed to quality and innovation, REC offers photovoltaic modules with leading high quality, backed by an exceptional low warranty claims rate of less than 10 ppm. Founded in Norway in 1996, REC employs 2,000 people and has an annual solar panel capacity of 1.8 GW. With over 10 GW installed worldwide, REC is empowering more than 16 million people with clean solar energy. REC Group is a Bluestar Elkem company with headquarters in Norway, operational headquarters in Singapore, and regional bases in North America, Europe, and Asia-Pacific.

REC

www.recgroup.com

SG3K-D-NI/SG5K-D-NI

Residential Single Phase Inverter

AU

HIGH YIELD

- Higher yield with Max. efficiency 98.4 %, European efficiency 98.0 %
- 12.5 A MPPT current, and compatible with bifacial modules
- Flexible PV string configurations, DC/AC ratio up to 1.4

SMART MANAGEMENT

- Easy local and online monitoring via App or Web
- Export power control with smart energy meter

SAFE AND RELIABLE

- Built-in surge arresters and residual current protection
- High anti-corrosion with aluminum alloy die casting

EASY AND USER FRIENDLY

- 11.5 kg compact design, plug and play installation
- Fast commissioning via LCD

CIRCUIT DIAGRAM

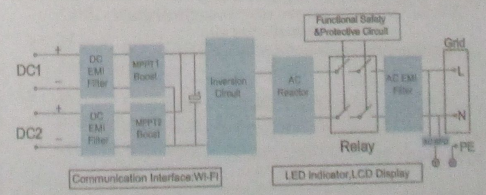

EFFICIENCY CURVE (SG5K-D-NI)

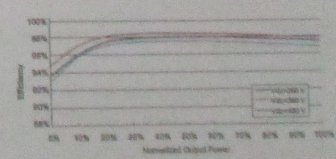

SUNGRO
Clean power for

Type designation	SG3K-D-NI	SG5K-D-NI
Input (DC)		
Recommended max. PV input power	4000 W	6700 W
Max. PV input voltage	600 V	
Min. PV input voltage / Startup voltage	90 V / 120 V	
Rated input voltage	360 V	
MPP voltage range	90 V – 560 V	
MPP voltage range for rated power	160 V – 480 V	260 V – 480 V
No. of MPPTs	2	
Max. number of PV strings per MPPT	1	
Max. PV input current	25 A (12.5 A / 12.5 A)	
Max. PV short-circuit current	40 A (20 A / 20 A)	
Output Side Data		
AC output power	3000 VA	4999 VA
Rated AC output apparent power	3000 VA	4999 VA
Max. AC output current	13.7 A	21.7 A
Rated AC voltage	230 Vac	
AC voltage range	180 Vac – 276 Vac	
Rated grid frequency	50 Hz / 60 Hz	
Grid frequency range	45 Hz – 55 Hz / 55 Hz – 65 Hz	
Total harmonic distortion (THD)	< 3 % (of rated power)	
Power factor	> 0.99 / 0.8 leading – 0.8 lagging	
Feed-in phases / Connection phases	1 / 1	
Efficiency		
Max. efficiency	98.4 %	
European efficiency	97.7 %	98.0 %
Protection		
PV reverse connection protection	Yes	
AC short circuit protection	Yes	
Leakage current protection	Yes	
Grid monitoring	Yes	
PV string current monitoring	Yes	
DC switch	Yes	
AFCI	No	
24H loads monitoring	No	
Overvoltage protection	No	
General Data	AC Type II	
Dimensions (W*H*D)	360*390*133 mm	
Weight	11.5 kg	
Isolation method	Transformerless	
Ingress protection rating	IP65	
Power loss in night mode	< 1W	
Operating ambient temperature	-25 ℃ to 60 ℃ (>45 ℃ derating)	
Allowable relative humidity	0 – 100 %	
Cooling method	Natural cooling	
Max. operating altitude	4000 m (> 2000 m derating)	
Display / Communication	LCD / WLAN	
PV connection type	MC4 (max. 6 mm²)	
AC connection type	Plug and play connector (max. 6 mm²)	
Certification	IEC62109-1, IEC62109-2, IEC62116, IEC61727, EN 61000-6-2, EN 61000-6-3, AS/NZS 4777.2:2020	
Grid support	Active & reactive power control, power ramp rate control	
Country of manufacture	China	

Cluster Skills Test Task Sheet - Planning

Phase 1 – UEE30820

Learner Name:		**ID:**	
College/ Campus:		**Group/ Class:**	
Learner Signature:		**Date:**	

Final Result of CST – Phase 1 (UEE30820) - Planning

The learner has demonstrated a satisfactory performance of identified steps listed.	Yes	No

Assessor Name:			
Assessor Signature:		**Date:**	

Comments:

Instruction:

The cluster test is broken down into three tasks – Task A to C. Planning for all tasks is initially undertaken to complete a job safety/hazard analysis, perform standard pre-work safety checks, development of wiring diagrams and material lists for each task. The carryout for each task can be carryout in any order and will be directed by your assessor. The carryout for each task involves the installation the circuit, testing of the circuit completing any necessary completion documentation.

- Time Allowed (to be specified by assessor):
- Orange shaded checkpoints are for assessor use only. Entering information in these areas may invalidate your assessment.
- Mobile phones and smart devices must be turned off and not accessed.
- Wait for the assessor to mark your work when requested.
- You will be allowed two (2) attempts at each check point to demonstrate the task described.
- If you are unsure about what you need to do, you should ask your assessor for guidance.
- Whilst carrying out skills activities you must follow all standard workplace procedures (i.e. Anti-discrimination, health and safety etc.) and ensure efficient / sustainable use of materials.

1. Planning the Cluster Skills Test

Your assessor will provide a pre-work briefing of the three tasks that you need to complete for this Cluster Skills Test.

1.1 Pre-Work Briefing

Your assessor will now brief you on tasks that you will be required to prep for and undertake during this cluster skills test. Use the space provided below to note down a brief dot point description of the tasks.

Basic Description of Job:

Planning:

- Planning of Task A, B and C installations will require:
  - Completing a job safety/hazard analysis (risk assessment
  - Conversion of the circuit diagram to wiring diagram for each of the three circuits.
  - Completion of material list for all three tasks.

- All work must be carryout that meets the AS/NZS 3000 Wiring Rules (current edition).
- All work must be carryout to meet sustainable and environment requirements.
- Mandatory PPE before entering work shop **Hard hat, Hi vis, Safety boots**
- Task A, B and C can be undertaken in in any order, your RTO assessor will give you instructions concerning the order each ta will be completed and the dimensions you will need to meet for each task.
- The following specifications for each tack, provides the technica requirements, the physical layout of the circuit and the circuit diagram.

Task A:

- Lighting circuit using intermediate switching and an electric bell circuit operated by a pushbutton switch.
- Protected by an 8 A, 30 mA Type C RCBO.

- Wired in flat TPS cable fixed to a surface (plywood board) with suitable cable clips.

The circuit operates of 23 V a.c. 50 Hz.

Task B:

- Supply to a special outlet to enable a power pack to be plug in and supply a voltage divider/timing circuit to control a 12 V lamp.
- Protected by a 16 A, 30 mA Type C RCBO.
- Wired in TPI cable enclosed in rigid non-metallic conduit from the switchboard to special purpose outlet. Power pack connected via a flexible 3 core lead and 3 pin plug.
- The power supplies a 24 V d.c. to a voltage divider circuit.
- Suitable resistors to be selected to provide the following voltages:
  - 15 V d.c at P1 to ground
  - 12 V d.c at P2 to ground.
- The timing circuit needs to supply the lamp with 12 V d.c. after 5 seconds.
- Output of circuit supplies a single signal lamp wired in TPI enclosed in corrugated PVC conduit.

Task C:

- Supplies a control circuit consisting of a magnetic sensor, relay and solenoid and isolation device.
- Protected by a 20 A, 30 mA Type C RCBO.
- Wired from the switchboard to a metallic J-Box in circular TPS cable support on perforated cable tray. Wiring from the 4-way

metallic J-Box to a metal enclosure using TPI cable in metallic conduit.

- The isolation switch is an IP56 wired in TPI enclosed in flexible metallic conduit and magnetic sensor wired in flexible TPS cable enclosed in PVC duct fixed by double sided adhesive tape.

Job Safety/Hazard Analysis (PASS 36/36)

Complete a Job Safety/Hazard Analysis (JSA/JHA) for the work task described in the pre-work briefing, using the following procedure: 3 per Task

- Break the work task down into steps.
- Identify any hazards that may be encountered whilst performing each step.
- Classify and list the level of risk posed by each hazard (Levels 1 to 4)
- Select control measures to reduce the risk posed by each hazard.

Severity \ Likelihood	Likely	Possible	Unlikely
Death or permanent disability	1	1	2
Serious injury or chronic illness	1	2	3
Minor injury requiring first aid	2	3	4

1 = Extreme risk
2 = High risk
3 = Medium risk
4 = Low risk

Task Step	Hazard/s	Risk Level	Control Measure/s
Task A	Exposed live terminals	1	Isolation, AC voltage to be a rating of 23v
Task A	Sharp edge tools, and equipment	3	Safety gloves
Task A	Flying debris, dust	3	Safety glasses

Task B	Exposed live terminals	3	Isolation, dc v to be a rating of 15v max
Task B	Sharp edge tools, and equipment	3	Safety gloves
Task B	Flying debris, dust	3	Safety glasses
Task C	Sharp edge tools, and equipment	3	Safety gloves
Task C	Flying debris, dust	3	Safety glasses
Task C	Material and equipment on the floor	3-4	House keeping

1. Based on your JSA/JHA, identify the tools and safety equipment needed to safely carry out the task. List of the required items in the table below.
2. Obtain the required equipment from your assessor and check the condition of each item. Use the checklist to document your findings, and if any tools/equipment is unsafe indicate why in the comments column.

PASS (8/8)

Tools, Safety Equipment and PPE

Item	Condition		Comments
Safety gloves	☐ OK	☐ Unsafe	
Safety Glasses	☐ OK	☐ Unsafe	
Multimeter / IR Tester	☐ OK	☐ Unsafe	
Battery drills	☐ OK	☐ Unsafe	
Pliers	☐ OK	☐ Unsafe	
Screw Drivers	☐ OK	☐ Unsafe	
Conduit cutters	☐ OK	☐ Unsafe	
Miscellaneous (fixing etc.)	☐ OK	☐ Unsafe	
	☐ OK	☐ Unsafe	

1. Planning the Cluster Skills Test

3. Discuss your JSA/JHA and equipment list with your assessor, and then finalise your work preparation by completing the pre-work checklist.

Pre-Work Checklist

- ☐ JSA/JHA approved by assessor
- ☐ Required work permits obtained
- ☐ Control measures are in place
- ☐ Tools/equipment obtained and checked

I confirm I have read and understood the attached JSA/JHA, and agree to perform work in the manner detailed on it.

Name: **Signature:** **Date:**

4. The assessor must assess your work at this point. **(Checkpoint 1)**

Checkpoint 1 – Planning the Cluster Skills Test		**Satisfactory Yes/No**	
Item	**Description of Item**	**1st**	**2nd**
	Pre-Work Briefing		
	Document Work Task		
1	Task Steps **(Pass 9/9)**		
2	Hazards **(Pass 9/9)**		
3	Risks **(Pass 9/9)**		
4	Control Measures **(Pass 9/9)**		
5	Equipment Selection **(Pass 8/8)**		
7	Equipment Safety Checks **(Pass 8/8)**		
8	Consultation and Approvals		
	Assessor Initial:		

2. Task A Planning

1. Using the job specification – Task A, develop a wiring diagram in the space provided below. **(PASS 7/7)**

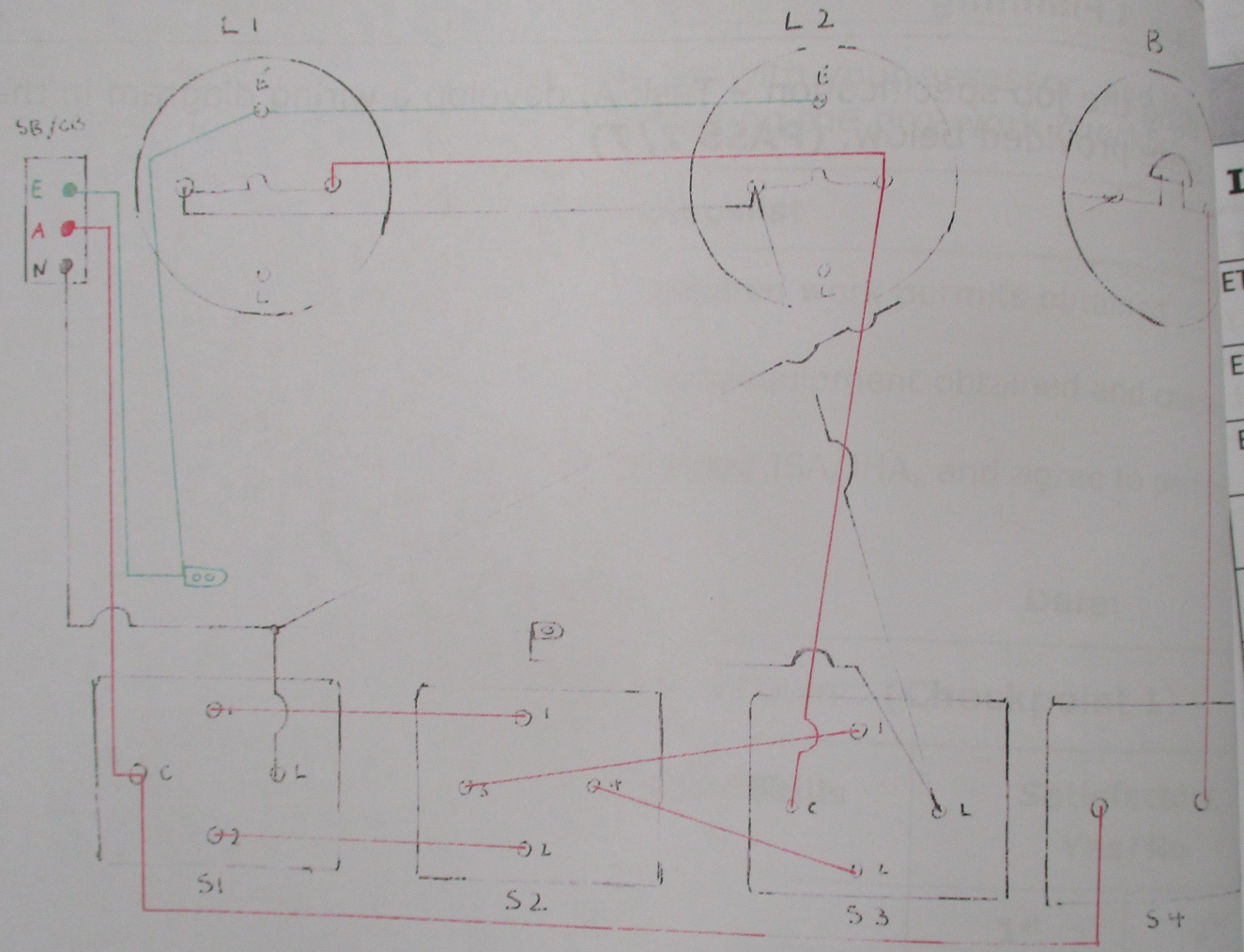

2. Using the details in the specification and you're wiring diagram, develop list of materials required to complete this task. Your list should give enough information about each material item so that your list would provide clear instructions to another person. This information may inclu ratings, sizes, type, colour, and catalogue numbers. Trade catalogues m be useful in helping select the material you need. Use the Material List Table to complete this item.

3. The assessor must assess

Item No.	I
ETC001	100amp HRC fuses
ETC002	100amp HRC fuses
ETC003	80amp HRC fuses
ETC004	80amp HRC fuses
ETC005	1.5mm SDI cable
ETC006	2 core 1.5 TPS ca
ETC007	2 core & Earth 1
ETC008	2.5mm SDI cabl
ETC009	2 core 2.5mm
ETC010	2 core + Earth
ETC011	4 pole sub bo
ETC012	8 pole sub b
ETC013	12 pole sub
ETC014	Shallow m
ETC015	Deep mo

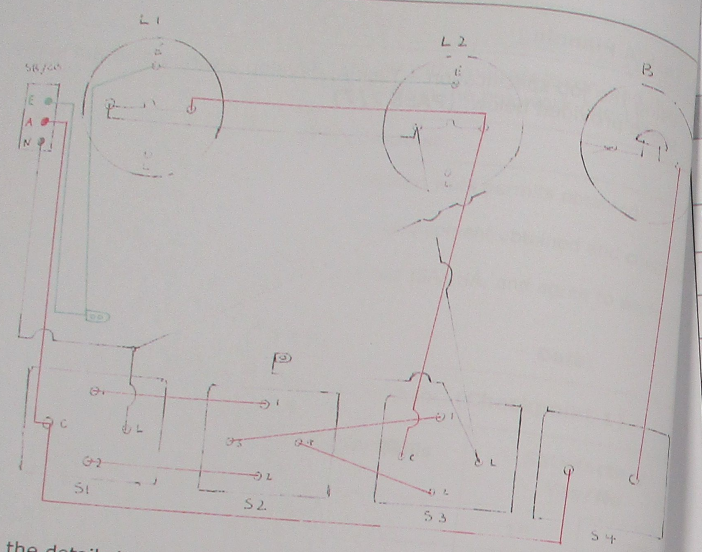

2. Using the details in the specification and you're wiring diagram, develop a list of materials required to complete this task. Your list should give enough information about each material item so that your list would provide clear instructions to another person. This information may include ratings, sizes, type, colour, and catalogue numbers. Trade catalogues may be useful in helping select the material you need. Use the Material List Table to complete this item.
3. The assessor must assess your work at this point. **(Checkpoint 2)**

Checkpoint 2 – Task A Planning		**Satisfactory Yes/No**	
Item	**Description of Item**	**1st**	**2nd**
1	Wiring Diagram **(PASS 7/7)**		
2	Material List		
	Assessor Initial:		

Task A – Material List		
Item No.	**Item Description**	**Quantity**
ETC001	100amp HRC fuses front wired	
ETC002	100amp HRC fuses back wired	
ETC003	80amp HRC fuses front wired	
ETC004	80amp HRC fuses back wired	
ETC005	1.5mm SDI cable	
ETC006	2 core 1.5 TPS cable	
ETC007	2 core & Earth 1.5mm TPS	
ETC008	2.5mm SDI cable	
ETC009	2 core 2.5mm TPS cable	
ETC010	2 core + Earth 2.5mm TPS	
ETC011	4 pole sub board	
ETC012	8 pole sub board	
ETC013	12 pole sub board	
ETC014	Shallow mounting blocks	
ETC015	Deep mounting blocks	
ETC016	Batten Holder	
ETC017	1-way shallow junction box	
ETC018	2-way shallow junction box	
ETC019	3-way shallow junction box	
ETC020	4-way shallow junction box	
ETC021	2 way right angled shallow junction box	
ETC022	1 gang 10 amp light switch	
ETC023	2 gang 10amp light switch	

Item No.	Item Description	Quantity
ETC024	10amp Intermediate switch mechanism	
ETC025	24v Doorbell switch	
ETC026	Single 10amp GPO	
ETC027	Double 10amp GPO	
ETC028	1.5mm cable clips	
ETC029	2.5mm cable clips	
ETC030	20mm rigid conduit	
ETC031	25mm rigid conduit	
ETC032	2 core + earth 1.5mm medium duty flexible cable	
ETC033	2 core + earth 1.5mm heavy duty flexible cable	
ETC034	Resistor	Values.....
ETC035	Capacitor	Values.....
ETC036	10amp 3 pin plug	
ETC037	15amp 3 pin plug	
ETC038	Power Pack/Bridge Rectifier	
ETC039	Wood screws	
ETC040	Hollow wall anchors	
ETC041	20mm conduit adapter	
ETC042	25mm conduit adapter	
ETC043	Plastic Enclosure	
ETC044	75mm cable tray	
ETC045	100mm cable tray	
ETC046	150mm cable tray	

Item No.	Item Description	Quantity
ETC047	225 cable tray	
ETC048	600mm cable tray	
ETC049	63amp 1 POLE MCB	
ETC050	20amp 1 POLE MCB	
ETC051	20amp 1 POLE MCB/RCD	
ETC052	16amp 1 POLE MCB/RCD	
ETC053	16mm PVC Duct	
ETC054	20mm PCV Duct	
ETC055	25mm PVC Duct	
ETC060	double sided tape	
ETC061	Metal enclosure	
ETC062	Magnetic sensor	
ETC063	300mm x 300mm switchboard surround	
ETC064	600mm x 600mm switchboard surround	
ETC065	2 core 16mm XLPE Cable	
ETC066	4 core 16mm XLPE Cable	
ETC067	20mm conduit	
ETC068	25mm conduit	
ETC069	32mm conduit	
ETC070	16 mm metal corrugated	
ETC071	20 mm metal corrugated	
ETC072	25 mm metal corrugated	
ETC073		

3. Task B Planning

1. Using the job specification – Task B, develop a wiring diagram in the space provided below. **(PASS 9/9)**

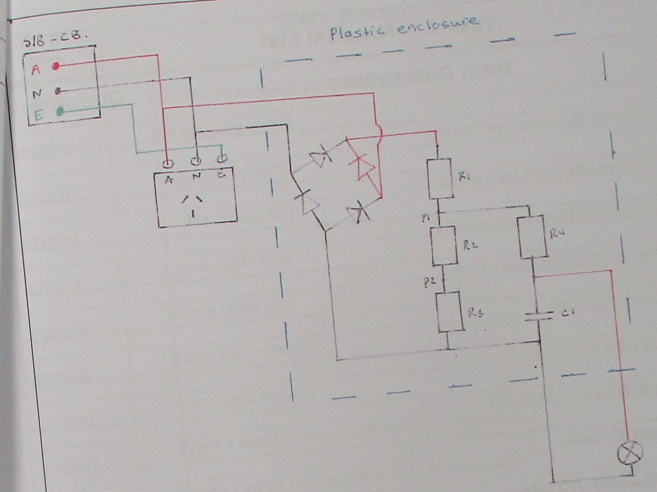

2. Using the details in the specification and you're wiring diagram, develop a list of materials required to complete this task. Your list should give enough information about each material item so that your list would provide clear instructions to another person. This information may include ratings, sizes, type, colour, and catalogue numbers. Trade catalogues may be useful in helping select the material you need. Use the Material List Table to complete this item.

3. The assessor must assess your work at this point. **(Checkpoint 3)**

Checkpoint 3 – Task B Planning		**Satisfactory Yes/No**	
Item	**Description of Item**	**1st**	**2nd**
1	Wiring Diagram **(PASS 9/9)**		
2	Material List		
	Assessor Initial:		

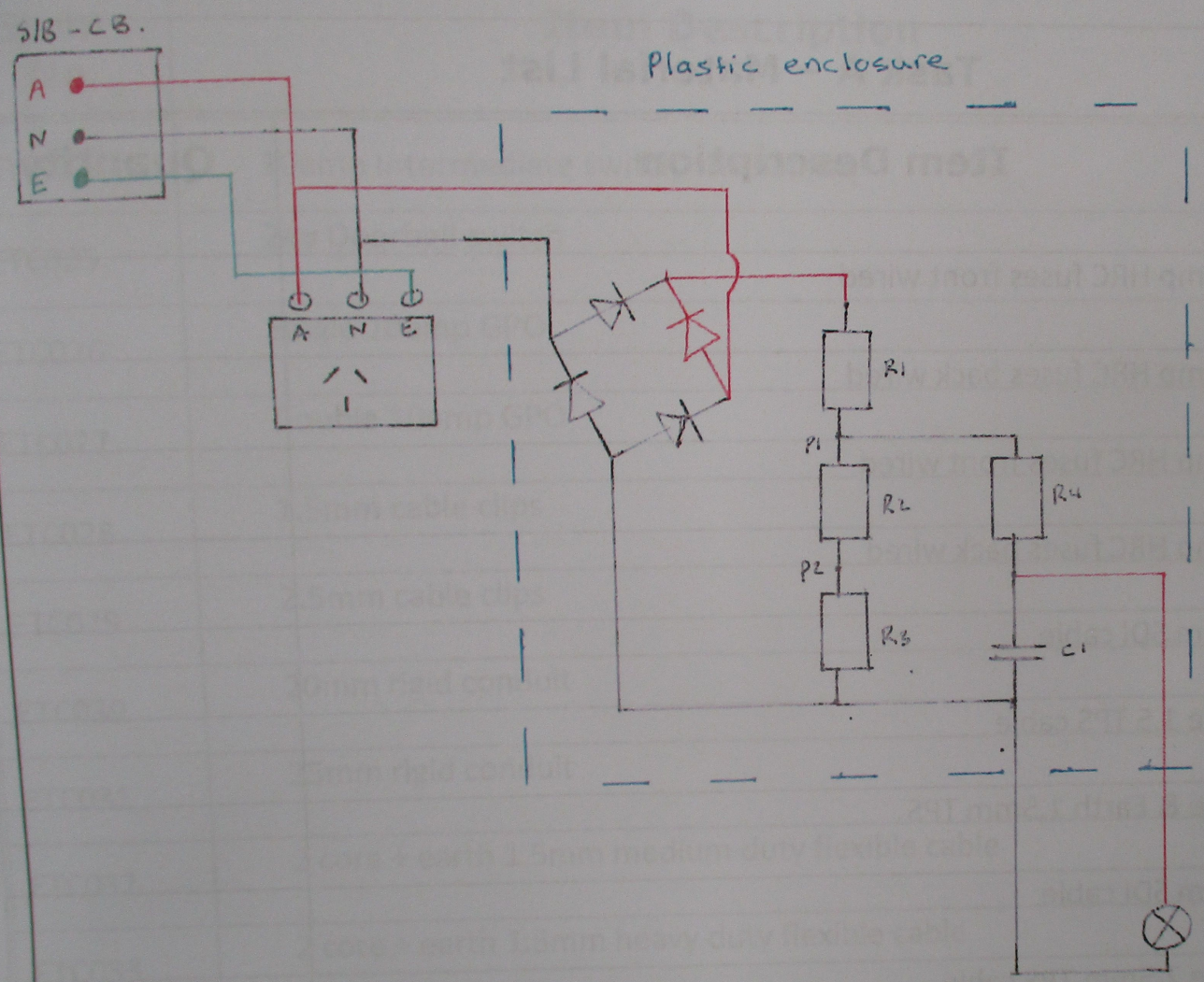

2. Using the details in the specification and you're wiring diagram, develop a list of materials required to complete this task. Your list should give enough information about each material item so that your list would provide clear instructions to another person. This information may include ratings, sizes, type, colour, and catalogue numbers. Trade catalogues may be useful in helping select the material you need. Use the Material List

Task A – Material List

Item No.	Item Description	Quantity
ETC001	100amp HRC fuses front wired	
ETC002	100amp HRC fuses back wired	
ETC003	80amp HRC fuses front wired	
ETC004	80amp HRC fuses back wired	
ETC005	1.5mm SDI cable	
ETC006	2 core 1.5 TPS cable	
ETC007	2 core & Earth 1.5mm TPS	
ETC008	2.5mm SDI cable	
ETC009	2 core 2.5mm TPS cable	
ETC010	2 core + Earth 2.5mm TPS	
ETC011	4 pole sub board	
ETC012	8 pole sub board	
ETC013	12 pole sub board	
ETC014	Shallow mounting blocks	
ETC015	Deep mounting blocks	
ETC016	Batten Holder	
ETC017	1-way shallow junction box	
ETC018	2-way shallow junction box	
ETC019	3-way shallow junction box	
ETC020	4-way shallow junction box	
ETC021	2 way right angled shallow junction box	
ETC022	1 gang 10 amp light switch	
ETC023	2 gang 10amp light switch	

Item No.	Item Description	Quantity
ETC024	10amp Intermediate switch mechanism	
ETC025	24v Doorbell switch	
ETC026	Single 10amp GPO	
ETC027	Double 10amp GPO	
ETC028	1.5mm cable clips	
ETC029	2.5mm cable clips	
ETC030	20mm rigid conduit	
ETC031	25mm rigid conduit	
ETC032	2 core + earth 1.5mm medium duty flexible cable	
ETC033	2 core + earth 1.5mm heavy duty flexible cable	
ETC034	Resistor	Values.....
ETC035	Capacitor	Values.....
ETC036	10amp 3 pin plug	
ETC037	15amp 3 pin plug	
ETC038	Power Pack/Bridge Rectifier	
ETC039	Wood screws	
ETC040	Hollow wall anchors	
ETC041	20mm conduit adapter	
ETC042	25mm conduit adapter	
ETC043	Plastic Enclosure	
ETC044	75mm cable tray	
ETC045	100mm cable tray	
ETC046	150mm cable tray	

Item No.	Item Description	Quantity
ETC047	225 cable tray	
ETC048	600mm cable tray	
ETC049	63amp 1 POLE MCB	
ETC050	20amp 1 POLE MCB	
ETC051	20amp 1 POLE MCB/RCD	
ETC052	16amp 1 POLE MCB/RCD	
ETC053	16mm PVC Duct	
ETC054	20mm PCV Duct	
ETC055	25mm PVC Duct	
ETC060	double sided tape	
ETC061	Metal enclosure	
ETC062	Magnetic sensor	
ETC063	300mm x 300mm switchboard surround	
ETC064	600mm x 600mm switchboard surround	
ETC065	2 core 16mm XLPE Cable	
ETC066	4 core 16mm XLPE Cable	
ETC067	20mm conduit	
ETC068	25mm conduit	
ETC069	32mm conduit	
ETC070	16 mm metal corrugated	
ETC071	20 mm metal corrugated	
ETC072	25 mm metal corrugated	
ETC073		

4. Task C Planning

1. Using the job specification – Task C, develop a wiring diagram in the space provided below. **(PASS 5/5)**

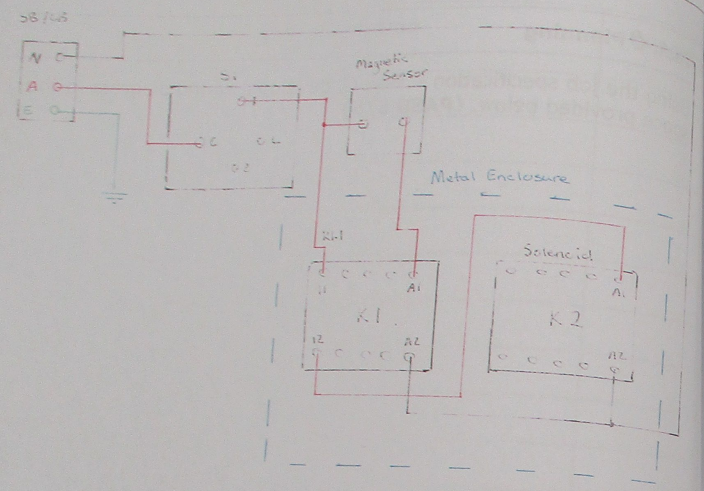

2. Using the details in the specification and you're wiring diagram, develop a list of materials required to complete this task. Your list should give enough information about each material item so that your list would provide clear instructions to another person. This information may include ratings, sizes, type, colour, and catalogue numbers. Trade catalogues may be useful in helping select the material you need. Use the Material List Table to complete this item.
3. The assessor must assess your work at this point. **(Checkpoint 4)**

Checkpoint 4 – Task C Planning		Satisfactory Yes/No	
Item	**Description of Item**	**1st**	**2nd**
1	Wiring Diagram **(PASS 5/5)**		
2	Material List		
	Assessor Initial:		

Task A – Material List		Quantity
Item No.	**Item Description**	
ETC001	100amp HRC fuses front wired	
ETC002	100amp HRC fuses back wired	
ETC003	80amp HRC fuses front wired	
ETC004	80amp HRC fuses back wired	
ETC005	1.5mm SDI cable	
ETC006	2 core 1.5 TPS cable	
ETC007	2 core & Earth 1.5mm TPS	
ETC008	2.5mm SDI cable	
ETC009	2 core 2.5mm TPS cable	
ETC010	2 core + Earth 2.5mm TPS	
ETC011	4 pole sub board	
ETC012	8 pole sub board	
ETC013	12 pole sub board	
ETC014	Shallow mounting blocks	
ETC015	Deep mounting blocks	
ETC016	Batten Holder	
ETC017	1-way shallow junction box	
ETC018	2-way shallow junction box	
ETC019	3-way shallow junction box	
ETC020	4-way shallow junction box	
ETC021	2 way right angled shallow junction box	
ETC022	1 gang 10 amp light switch	
ETC023	2 gang 10amp light switch	

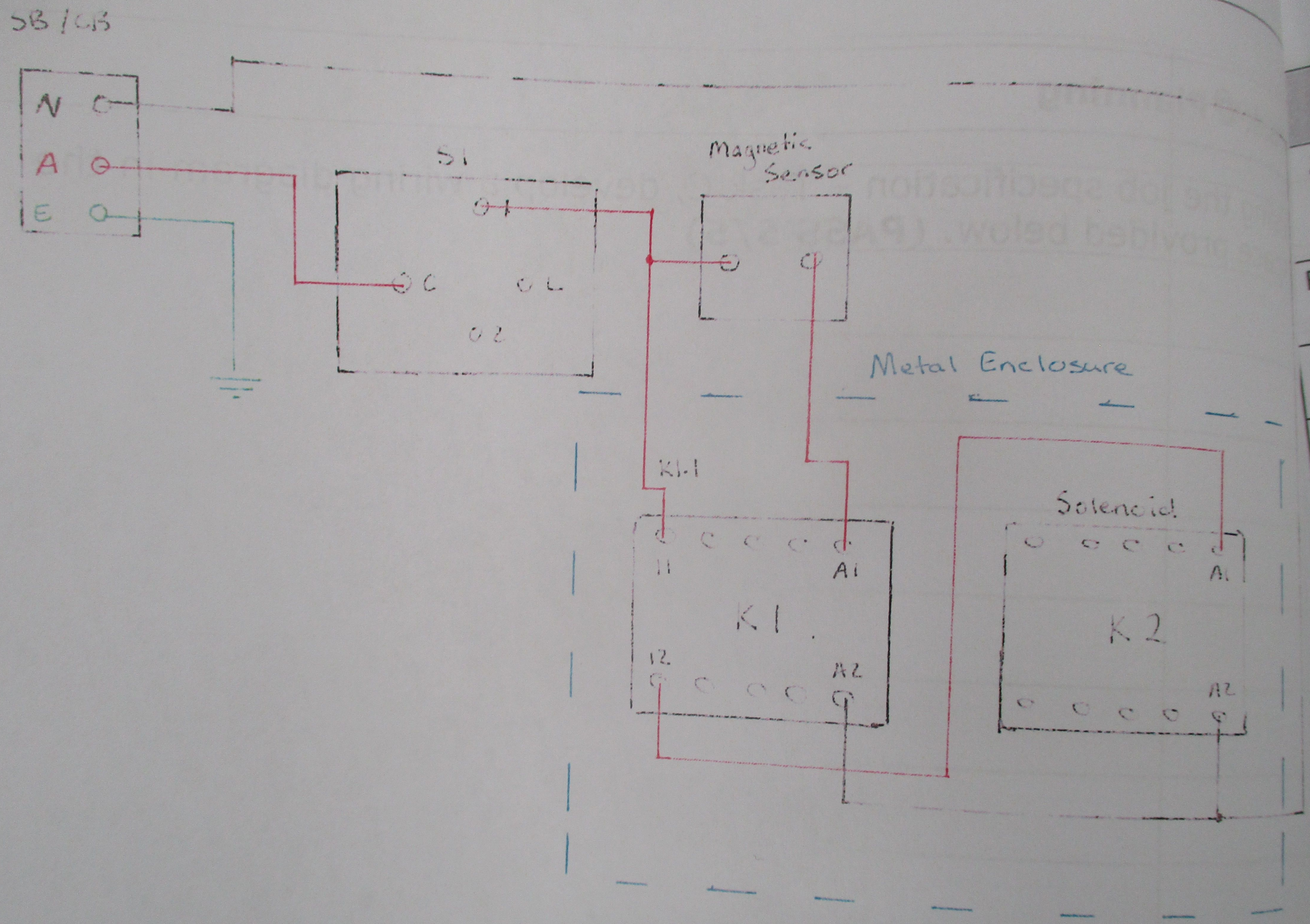

2. Using the details in the specification and you're wiring diagram, develop list of materials required to complete this task. Your list should give enough information about each

Item No.
ETC001
ETC002
ETC00
ETC0
ETC0
ETC
ETC
ETC
ET
E

Item No.	Item Description	Quantity
ETC024	10amp Intermediate switch mechanism	
ETC025	24v Doorbell switch	
ETC026	Single 10amp GPO	
ETC027	Double 10amp GPO	
ETC028	1.5mm cable clips	
ETC029	2.5mm cable clips	
ETC030	20mm rigid conduit	
ETC031	25mm rigid conduit	
ETC032	2 core + earth 1.5mm medium duty flexible cable	
ETC033	2 core + earth 1.5mm heavy duty flexible cable	
ETC034	Resistor	Values.....
ETC035	Capacitor	Values.....
ETC036	10amp 3 pin plug	
ETC037	15amp 3 pin plug	
ETC038	Power Pack/Bridge Rectifier	
ETC039	Wood screws	
ETC040	Hollow wall anchors	
ETC041	20mm conduit adapter	
ETC042	25mm conduit adapter	
ETC043	Plastic Enclosure	
ETC044	75mm cable tray	
ETC045	100mm cable tray	
ETC046	150mm cable tray	

Item No.	Item Description	Quantity
ETC047	225 cable tray	
ETC048	600mm cable tray	
ETC049	63amp 1 POLE MCB	
ETC050	20amp 1 POLE MCB	
ETC051	20amp 1 POLE MCB/RCD	
ETC052	16amp 1 POLE MCB/RCD	
ETC053	16mm PVC Duct	
ETC054	20mm PCV Duct	
ETC055	25mm PVC Duct	
ETC060	double sided tape	
ETC061	Metal enclosure	
ETC062	Magnetic sensor	
ETC063	300mm x 300mm switchboard surround	
ETC064	600mm x 600mm switchboard surround	
ETC065	2 core 16mm XLPE Cable	
ETC066	4 core 16mm XLPE Cable	
ETC067	20mm conduit	
ETC068	25mm conduit	
ETC069	32mm conduit	
ETC070	16 mm metal corrugated	
ETC071	20 mm metal corrugated	
ETC072	25 mm metal corrugated	
ETC073		

EECC00023 — C0203
EECD0007 — E101A
EECD0016 — E137A
EECD0019 — E102A
EECD0020 — E105A
EECD0051 — E107A
RE0001 — H142A

EC00046 } — E104
EECD0044 }
EV0005 — F102A

EEEL0021 } — G101
EEEL0019 }
UEEEL0020 — G102A
UEEEL0023 — G106A

UEEEL0008 }
UEEEL0009 } — G033
UEEEL0010 }

UEEEL0024 } — G006
UEEEL0025 }
UEEEL0003 — G063A
UEEEL0047
UEEEL0014 — G103/104
UEEEL0005 — G109A
UEENS0007
UEEEL0012 — G107A
UEEEL0012 — G103/104
ITLTAI2009
UETDRRF06

UEEEL0039 — G105A

CPPSEC 2021/23/26

SIUNT

2526mon3a ## %

ergebnis

7 ergebnis

8 20149ergebnis

7(ms) ergebnis

10 7(h) | 40(71) 42(72) 46(84) 47(90) 50(92)

12 (11)

13 (13)

15 (12)

mycampus.com

e-Govt

ber 53(100)

62(116) digital

66(stat)

70(134) Anmeldung

23(159) National portal