Braze welding process

Braze welding uses an oxyacetylene flame, a flux to clean the surface, and a filler rod made from a copper/zinc alloy. The filler rod melts at a much lower temperature than the parts to be joined, and the parent metal is not melted.

Braze welding is different from brazing in that it uses different joint preparations, filler metal and welding technique. The weld preparations for braze welding are like the ones used for fusion welding. They allow for full thickness welds and give strong joints. The bond strength comes from the filler metal penetrating into the metal's grain boundaries and sticking to the surface of the joint preparation.

Braze welding technique

The parts are first heated using a slightly oxidising flame. The flux is added to the heated end of the filler rod and applied to the joint during welding.

Advantages of braze welding

- requires much less heat input and causes less distortion than fusion welding
- braze welding is able to join a wide range of dissimilar metals including non-ferrous and ferrous, eg copper, steel, cast iron.

Disadvantages of braze welding

- higher consumable costs
- loss of strength at moderately high temperatures (above 260°C)
- will corrode if in contact with ammonia.

Uses of braze welding

Braze welding is used for repairing machinery and fittings in maintenance work. Other uses include making leakproof joints on small tanks and constructing furniture from hollow sections.
Braze welding is ideal for repairing broken or worn cast iron components.

Safety when braze welding

Safety precautions

- Have enough ventilation
- Don't let fluxes touch your skin
- Use flame and other equipment carefully
- Observe Occupational Health & Safety procedures

Safety clothing

Wear the right clothing for the work you have to do. For example, for bench work wear:

- overalls
- work boots
- non-flammable under-clothing
- oxy-welding goggles with standard filter lens.

Review questions

These questions will help you revise what you've learnt in Section 4.

1. State the differences between braze welding and brazing.

   _____

   _____

2. State the names of the **two** main metals that make up the alloy filler rod for braze welding.

   - _____
   - _____

3. Give a reason why flux is used in braze welding.

   _____

   _____

4. List **three** metals suitable for braze welding.

   - _____
   - _____
   - _____

5. Name a use for braze welding.

   _____

6. Compare braze welding with oxyacetylene fusion welding by listing **two** advantages and disadvantages of braze welding.

   Advantages

   - _____
   - _____

   Disadvantages

   - _____
   - _____

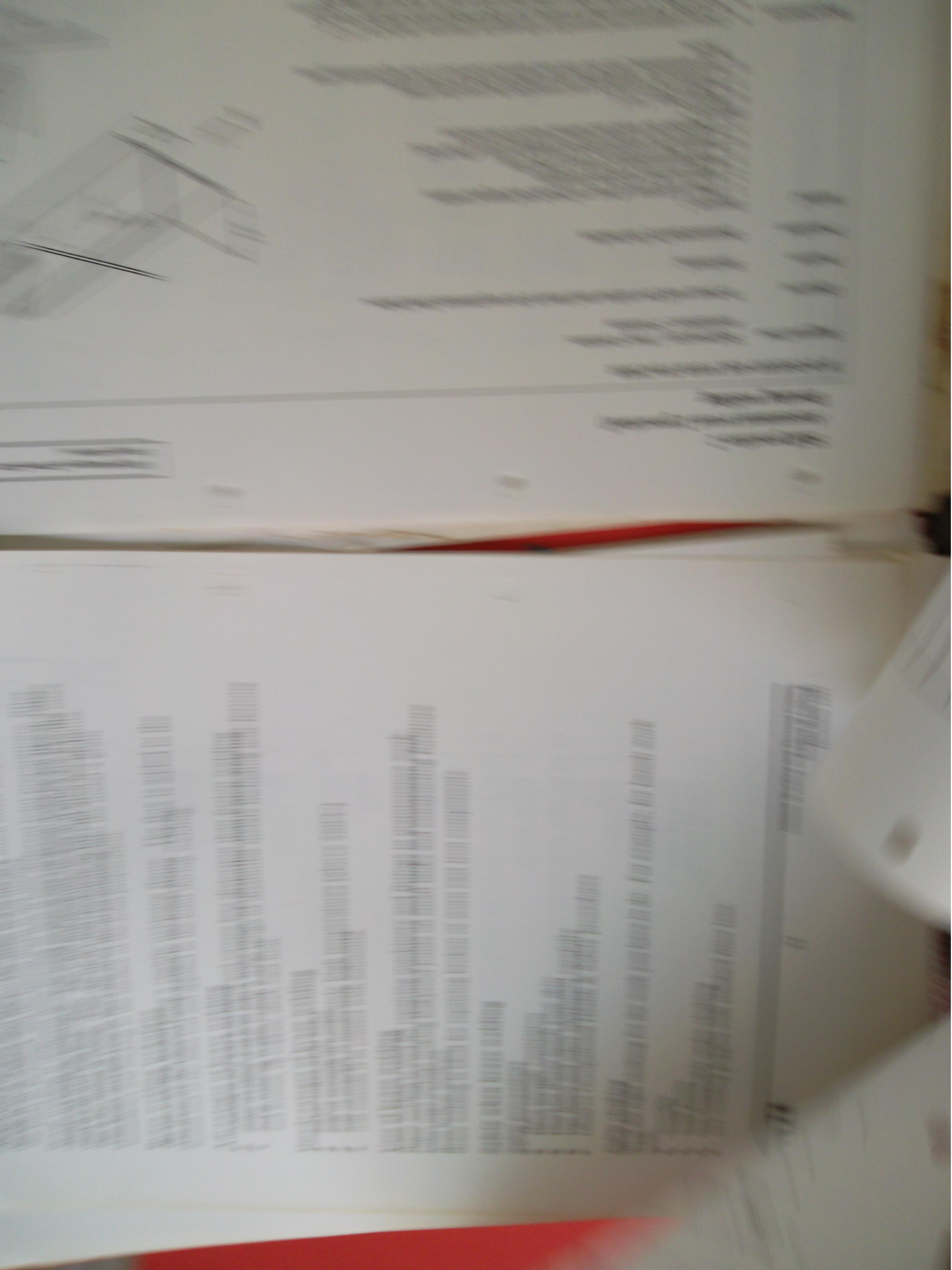

Review questions

List **two** potential hazards associated with the braze welding process.

_____

_____

Section 5: Braze welding

SUGGESTED DURATION	PREAMBLE
1 hour 45 minutes	This section enables you to safety braze weld low carbon steel sheet.

Objectives

At the end of this section you will be able to:

- ☐ braze weld low carbon steel sheet in the horizontal position to following requirements
  - correct alignment and assembly with angular distortion of 0° to 5°
  - no melting of the parent metal
  - adequate tinning and bonding of the joining surfaces
  - a maximum of two significant surface defects per weld length with an accumulative defect area not exceeding 10 mm square per 150 mm weld length
- ☐ record the braze welding procedure
- ☐ follow Occupational Health & Safety workshop procedures.

Safety

- Follow all Occupational Health & Safety workshop procedures.
- Wear the proper eye protection.
- Wear suitable protective clothing.
- Keep your work area tidy.

Procedure sheet
Braze welding

Sketch	
Gas data Regulator Pressure O_2 C_2H_2 Flame type Weld tip size	**Consumables data** Filler type Filler size Flux
Material data Type Thickness	**Weld time** Start Finish Units completed
Assessment	**Complies** / **Does not comply**
Alignment	
Distortion	
Tinning and bonding	
Surface finish	
Surface defects	
Name	**Exercise Number**

Skill practice 2
Assessment event 2 (practical)
Brazing welding

IF IN DOUBT ASK YOUR TEACHER

Suggeted time Skill practice: 1 hour 4 minutes
Assessment: 15 minutes

Objective To braze weld low carbon steel sheet to the requirements listed below.

Position Horizontal.

Procedure Demonstrated by the teacher.

Method

Exercise 1
1. Clean weld zone of rust, mill scale and organic matter.
2. Align and tack weld the assembly.
3. Weld approximately 50 mm of the joint.
4. Examine the weld profile and tinning action of the weld.
5. Complete the weld and submit work to the teacher.

Exercise 2
6. Repeat Steps 1 to 4.
7. Evaluate the weld project and complete the procedure sheet.
8. For assessment, join the first and second exercises to the requirements given below.

Requirements
- Correct alignment and assembly with angular distortion limited to 0°-5°
- No melting or parent plate or excessive loss of filler metal alloying elements
- Adequate tinning and bonding of the deposited alloy to the parent material
- A maximum of two significant surface defects per weld length with an accumulative defect area not exceeding 10 mm square per weld

Material unit 2 pieces 50 x 1.6 x 150 mm low carbon steel sheet
2 pieces 25 x 1.6 x 150 mm low carbon steel sheet

Unit required 2

Filler material 1.6 mm diameter manganese bronze and copper/brass flux.

Economy Join exercises 1 and 2 for maximum use of material. Return all unused material to the store.

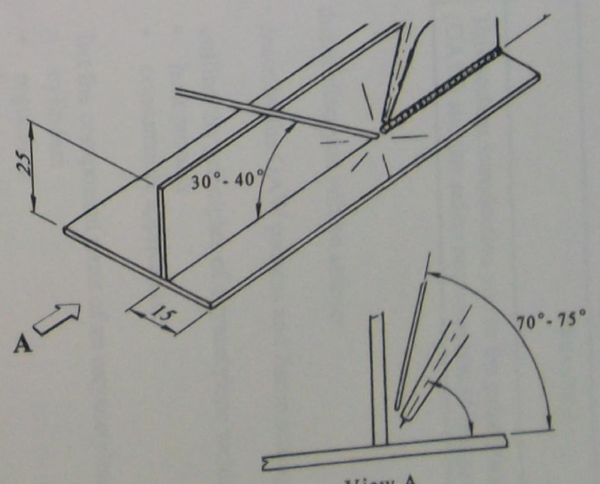

View A

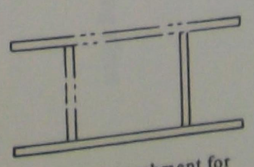
Method of attachment for maximum material use.

Skill practice 2
Assessment event 2 (practical)
Brazing welding

IF IN DOUBT ASK YOUR TEACHER

Suggeted time Skill practice: 1 hour 4 minutes
Assessment: 15 minutes

Objective To braze weld low carbon steel sheet to the requirements listed below.

Position Horizontal.

Procedure Demonstrated by the teacher.

Method

Exercise 1
1. Clean weld zone of rust, mill scale and organic matter.
2. Align and tack weld the assembly.
3. Weld approximately 50 mm of the joint.
4. Examine the weld profile and tinning action of the weld.
5. Complete the weld and submit work to the teacher.

Exercise 2
6. Repeat Steps 1 to 4.
7. Evaluate the weld project and complete the procedure sheet.
8. For assessment, join the first and second exercises to the requirements given below.

Requirements
- Correct alignment and assembly with angular distortion limited to 0°-5°
- No melting or parent plate or excessive loss of filler metal alloying elements
- Adequate tinning and bonding of the deposited alloy to the parent material
- A maximum of two significant surface defects per weld length with an accumulative defect area not exceeding 10 mm square per weld

Material unit 2 pieces 50 x 1.6 x 150 mm low carbon steel sheet
2 pieces 25 x 1.6 x 150 mm low carbon steel sheet

Unit required 2

Filler material 1.6 mm diameter manganese bronze and copper/brass flux.

Economy Join exercises 1 and 2 for maximum use of material. Return all unused material to the store.

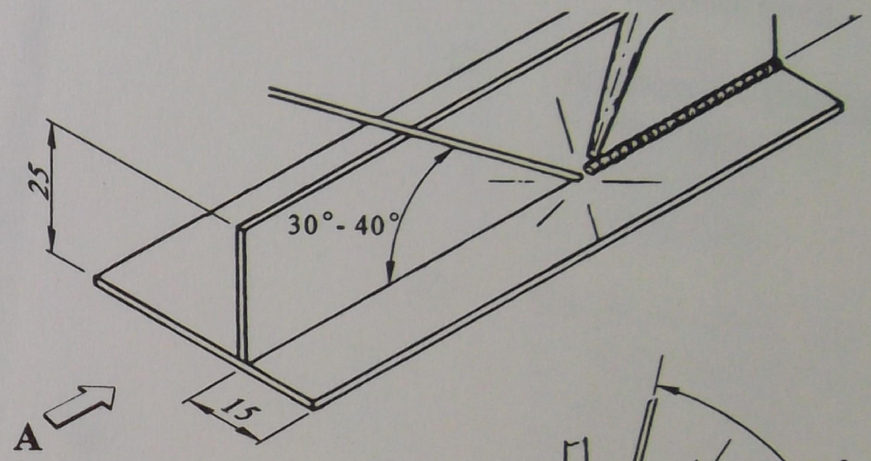

View A

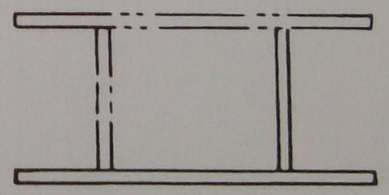

Method of attachment for maximum material use.

Notes

Section 6: Oxyacetylene welding theory

SUGGESTED DURATION	PREAMBLE
1 hour 30 minutes	This section introduction you to the principles of oxyacetylene welding (OAW) and the safety requirements of this process.

Objectives

At the end of this section you will be able to:

- ☐ describe the OAW process and flame settings
- ☐ outline the principles of oxyacetylene welding
  - heat process
  - consumable application
- ☐ list the component parts of an oxyacetylene welding plant
  - cylinders
  - regulators
  - hoses
  - welding torch
- ☐ compare the OAW process to arc welding in relation to:
  - deposition rate
  - portability
  - versatility
- ☐ list the common uses for OAW
  - maintenance repair
  - tubular furniture
  - farm uses
- ☐ list the hazards of the OAW process
  - heat
  - gases
  - fumes
- ☐ list the protective clothing available for OAW operators
  - eyes
  - body
  - feet
- ☐ describe the need for adequate ventilation when using the OAW process.

Oxyacetylene welding process

Oxyacetylene welding is a manual process which combines oxygen and acetylene gases to give a high temperature flame for welding.

The edges of the parts to be joined are melted and fused together to form a high strength joint. Additional weld metal can be added from a hand held filler rod.

You must protect the molten puddle with the flame to prevent the atmosphere from contaminating the molten weld pool.

The hot end of the filler rod and weld are protected from the atmosphere by the covering flame.

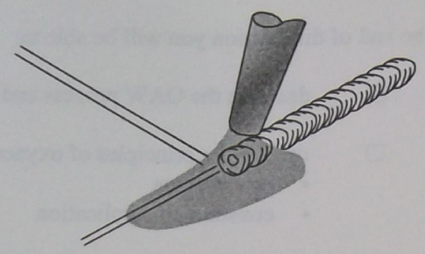

Equipment

Welding tips come in sizes to suit different metal thicknesses. They screw into the mixer which is on the end of the welding torch.

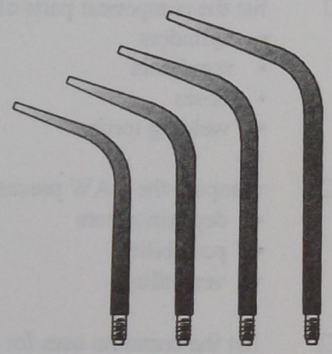

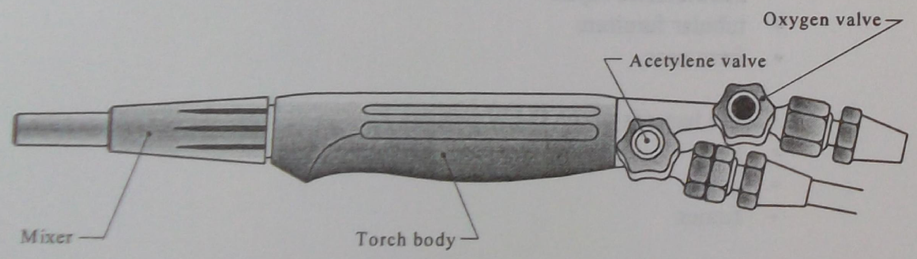

The table opposite shows the gas pressures suitable for the various tip sizes.

Tip size	Oxygen pressure kPa	Acetylene pressure kPa
8	50	50
10	50	50
12	50	50
15	50	50
20	50	50
26	50	50
32	100	100

Oxyacetylene welding equipment

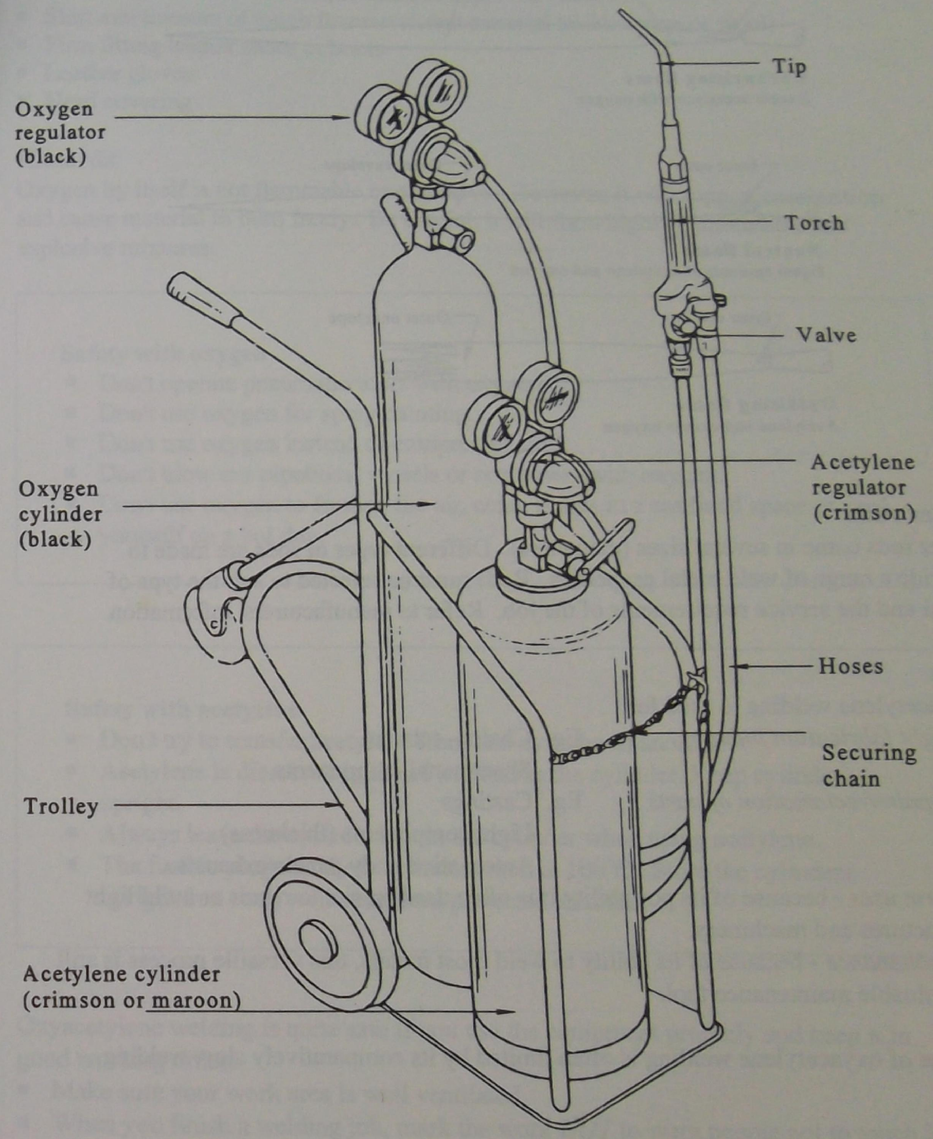

Oxyacetylene welding - flame adjustments

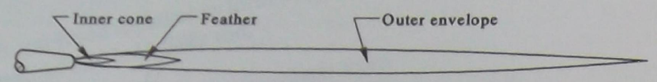

Carburising flame
Excess acetylene with oxygen

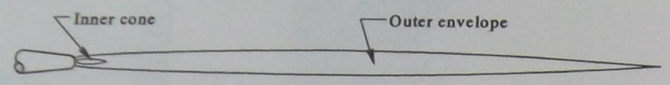

Neutral flame
Equal amounts of acetylene and oxygen

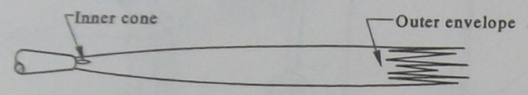

Oxidising flame
Acetylene and excess oxygen

Filler rods

Filler rods come in several sizes (diameters). Different types of rods are made to provide a range of weld metal properties. Rods must be selected to suit the type of metal and the service requirements of the job. Refer to manufacturers' information.

Uses

Oxyacetylene welding is used for:

- *Light fabrication industry* Eg. Chairs - tubular
  Sheet metal components
- *Repairs/reclamation of parts* Eg. Castings
  Light components (thickness)
  Automotive body panels/exhausts
- *Farm uses* - because of its portability it is often used on site to repair or build light structures and machinery.
- *Maintenance* - because of its ability to weld most metals, this versatile process is still a valuable maintenance tool.

The use of oxyacetylene welding is often limited by its comparatively slow welding speed.

Protective clothing

You must protect yourself from the radiated heat and rays when welding with oxyacetylene. Wear the following protective clothing.

- Shade 5 or 6 lens - Australian Standards approved
- Shirt and trousers of tough flame-resistant material (thick cotton or wool)
- Firm fitting leather shoes or boots
- Leather gloves
- Head covering

Hazards

Oxygen by itself is not flammable or explosive. However, it will support combustion and cause material to burn freely. Be careful, it will form highly combustable and explosive mixtures.

Safety with oxygen

- Don't operate pneumatic tools with oxygen.
- Don't use oxygen for spray painting.
- Don't use oxygen instead of compressed air.
- Don't blow out pipelines, vessels or containers with oxygen.
- Don't use oxygen to freshen the air, clean fumes in a confined space or cool yourself on a hot day.

Safety with acetylene

- Don't try to transfer acetylene from one cylinder to another.
- Acetylene is dissolved in liquid acetone in the cylinder. Keep cylinder upright.
- Always leave the cylinder key in the cylinder when using acetylene.
- The fusible plugs on these cylinders melt at 100˚C. Store the cylinders upright in a cool, well ventilated protected location.

Oxyacetylene welding is quite safe if you use the equipment properly and keep it in good working order.

- Make sure your work area is well ventilated.
- When you finish a welding job, mark the work *HOT* to warn people not to touch it.
- The burning temperature of the combined oxygen and acetylene gases is about 3100˚C. Treat this flame with extreme caution.
- Report all faulty or damaged equipment to your supervisor.

Review questions

These questions will help you revise what you've learnt in Section 6.

1. List **four** essential component parts required to operate an oxyacetylene welding plant.

   - _____
   - _____
   - _____
   - _____

2. Cylinders are identified by shape and colour.

   (a) State the colour used for oxygen cylinders.

   _____

   (b) State the colour used for acetylene cylinders.

   _____

3. State **two** industrial uses for oxyacetylene welding.

   - _____
   - _____

4. List **three** types of flame setting.

   - _____
   - _____
   - _____

5. How is the atmosphere excluded from the weld pool during the oxyacetylene process?

   _____

   _____

Review questions

6. List **three** items of clothing you need to protect you when oxyacetylene welding.

   - _____
   - _____
   - _____

Notes

Section 7: Oxyacetylene welding - beads on sheet

SUGGESTED DURATION	PREAMBLE
1 hour 30 minutes	This section enables you to safely deposit weld beads on low carbon steel sheet using the oxacetylene welding (OAW) process.

Objectives

At the end of this section you will be able to:

- ☐ open and close down an oxyacetylene welding plant
- ☐ deposit weld beads on carbon steel sheet to the following requirements:
  - neutral flame setting
  - weld beads for 150 mm continuous length
- ☐ document the weld procedure
- ☐ follow Occupational Health & Safety workshop procedures.

Safety

- Follow Occupational Health & Safety workshop procedures.
- Always wear close fitting welding goggles.
- Direct the flame away from regulators, hoses, clothes and other people.
- Make sure your equipment is in good working order.

Procedure sheet
Oxyacetylene welding - beads on sheet

Sketch		
Gas data Regulator Pressure 0_2 C_2H_2 Flame type Weld tip size		**Consumables data** Filler type Filler diameter Angles Torch Wire
Material data Type Thickness		**Weld time** Start Finish Units completed
Remarks	**Complies**	**Does not comply**
Flame setting		
Continuous weld bead		
Name		**Exercise Number**

Skill practice 3

Oxyacetylene welding - beads on sheet

IF IN DOUBT ASK YOUR TEACHER

Objective To create lines of fusion and to deposit continuous weld beads to the requirements given below.

Position Flat.

Procedure Demonstrated by the teacher.

Method

1. Set up equipment with all connections tight and set regulator pressures as demonstrated.
2. Position the sheet as shown in Exercise 1.
3. Light the torch and before starting to weld, revise:
   - Gas mixture
   - Torch angle
   - Distance of cone from molten pool (view A)
4. Appraise the finished line of fusion and repeat the exercise.
5. After adequate practice, add filler rod to produce continuous weld beads as shown in Exercise 2.
6. Evaluate the exercises and complete the procedure sheet.
7. Submit your work for evaluation.

Points to watch

- Flame setting
- Torch and filler rod angles
- Distance of cone from molten pool
- Pool size and welding speed

Requirements

- Neutral flame setting
- Weld beads for 150 mm continuous length

Material unit 1 piece 50 x 3 x 150 low carbon steel
1 piece 50 x 1.6 x 150 mm low carbon steel

Unit required 6

Economy Use both sides of sheets. Return unused material to the store.

Exercise 1

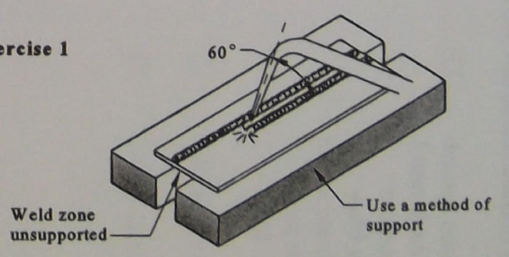

Exercise 2

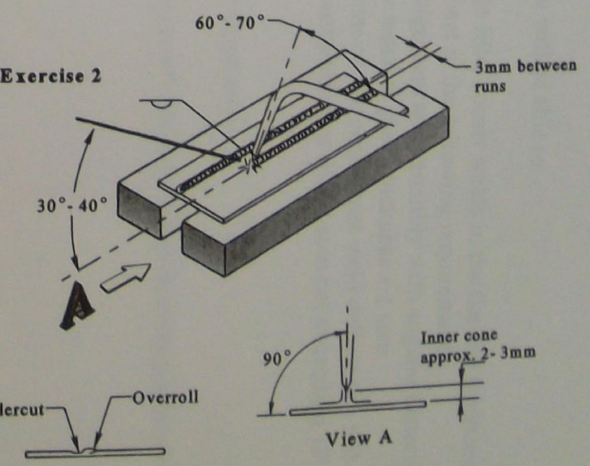

Skill practice 5

Oxyacetylene welding – beads on sheet

IF IN DOUBT ASK YOUR TEACHER

Objective To create line of fusion and to deposit continuous weld beads to the requirements given below.

Position Flat.

Procedure Demonstrated by the teacher.

Method

1. Set up equipment with all connections right and set regulator pressures as demonstrated.
2. Position the sheet as shown in Exercise 1.
3. Light the torch and before starting to weld, revise:
   - Gas mixture
   - Torch angle
   - Distance of cone from molten pool (view A)
4. Appraise the finished line of fusion and repeat the exercise.
5. After adequate practice, add filler rod to produce continuous weld beads as shown in Exercise 2.
6. Evaluate the exercises and complete the procedure sheet.
7. Submit your work for evaluation.

Points to watch
- Flame setting
- Torch and filler rod angles
- Distance of cone from molten pool
- Pool size and welding speed

Requirements
- Neutral flame setting
- Weld beads for 150 mm continuous length

Material unit
1 piece 50 x 3 x 150 low carbon steel
1 piece 50 x 1.6 x 150 mm low carbon steel

Unit required 6

Economy Use both sides of sheets. Return unused material to the store.

Exercise 1

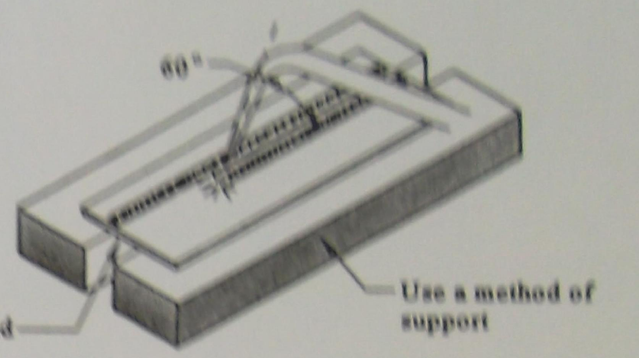

Exercise 2

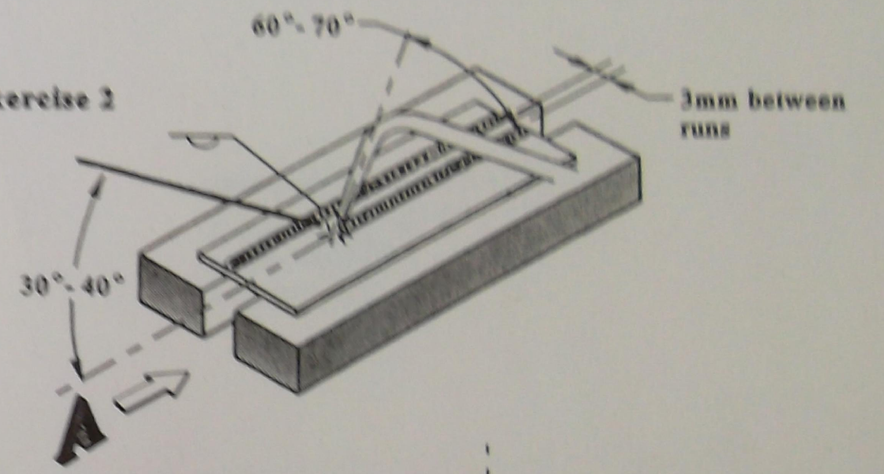

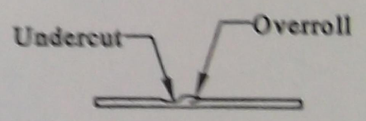

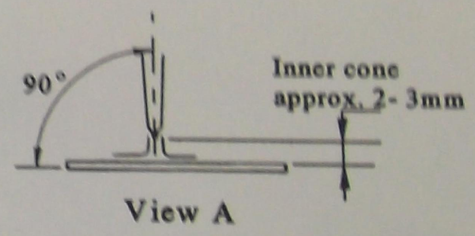

View A

Notes

Section 8: Oxyacetylene welding - outside corner

SUGGESTED DURATION	PREAMBLE
1 hours 30 minutes	This section enables you to safety deposit outside corner fillet welds in the flat and horizontal positions.

Objectives

At the end of this section you will be able to:

- ☐ deposit outside fillet corner welds in the flat and horizontal positions on 3 mm thick sheet to the following requirements:
  - correct alignment and assembly with angular distortion 0°-5°
  - weld size equal to plate thickness ± 1 mm
  - a maximum of two significant weld defects per 150 mm weld length with the accumulative defect area not exceeding 10 mm square per weld
- ☐ record the weld procedure
- ☐ follow Occupational Health & Safety workshop procedures.

Safety

- Follow Occupational Health & Safety workshop procedures.
- Wear the proper eye protection - make sure your goggles are a good fit and have shade 5 or 6 lenses.
- Direct the flame away from regulators, hoses, clothes and other people.

Procedure sheet
Oxyacetylene welding - outside corner

Sketch		
Gas data Regulator Pressure O_2 C_2H_2 Flame type Weld tip size		**Consumables data** Filler type Filler diameter Angles Torch Wire
Material data Type Thickness		**Weld time** Start Finish Units completed
Remarks	**Complies**	**Does not comply**
Alignment		
Distortion		
Weld size		
Surface defects		
Name	**Exercise Number**	

Skill practice 4

Oxyacetylene welding - outside corner

IF IN DOUBT ASK YOUR TEACHER

Objective To deposit outside corner welds to the requirements given below.

Position Flat.

Procedure Demonstrated by the teacher.

Method

1. Assemble and tack two sheets to form a corner joint ensuring correct fit and alignment.
2. Weld approximately 50 mm in a horizontal position.
3. After examination of the weld profile and penetration, complete the weld.
4. After inspection, add an additional section and repeat the exercise.
5. When a sufficient level of proficiency is reached, repeat the exercise.
6. Add additional sections as illustrated for further practice.
7. Evaluate the exercise and complete the procedure sheet.
8. Submit your work for evaluation.

Requirements

- Correct alignment and assembly with angular distortion limited to 0°–5°
- Weld size equal to plate thickness ±1 mm
- A maximum of two significant surface defects per weld length with an accumulative defect area not exceeding 10 mm square per weld

Material unit 2 pieces low carbon steel 50 x 3 x 150 mm.

Unit required 6

Economy Align and tack plates as directed. Join all filler rod short ends and return all unused material to the store.

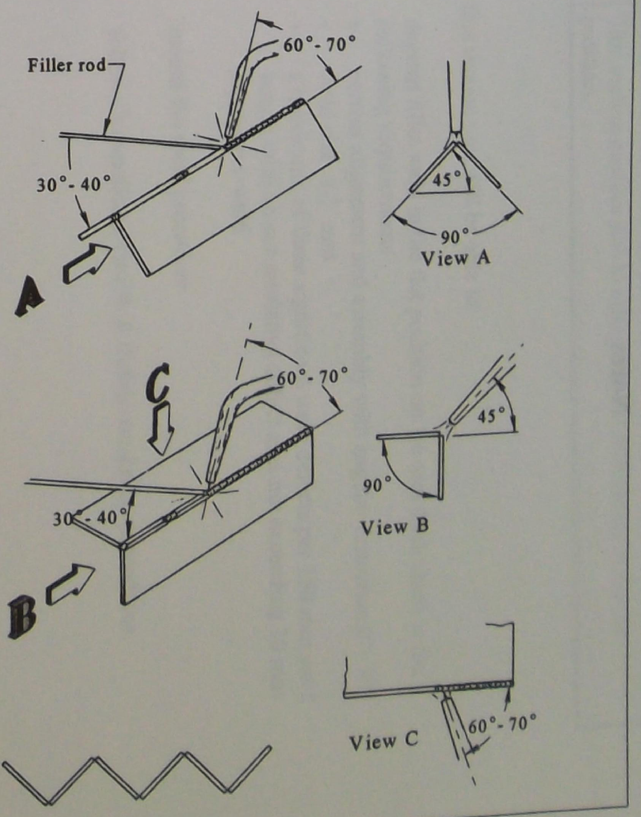

Skill practice 4

Oxyacetylene welding - outside corner

IF IN DOUBT ASK YOUR TEACHER

Objective To deposit outside corner welds to the requirements given below.

Position Flat.

Procedure Demonstrated by the teacher.

Method

1. Assemble and tack two sheets to form a corner joint ensuring correct fit and alignment.
2. Weld approximately 50 mm in a horizontal position.
3. After examination of the weld profile and penetration, complete the weld.
4. After inspection, add an additional section and repeat the exercise.
5. When a sufficient level of proficiency is reached, repeat the exercise.
6. Add additional sections as illustrated for further practice.
7. Evaluate the exercise and complete the procedure sheet.
8. Submit your work for evaluation.

Requirements

- Correct alignment and assembly with angular distortion limited to 0°–5°
- Weld size equal to plate thickness ±1 mm
- A maximum of two significant surface defects per weld length with an accumulative defect area not exceeding 10 mm square per weld

Material unit 2 pieces low carbon steel 50 x 3 x 150 mm.

Unit required 6

Economy Align and tack plates as directed. Join all filler rod short ends and return all unused material to the store.

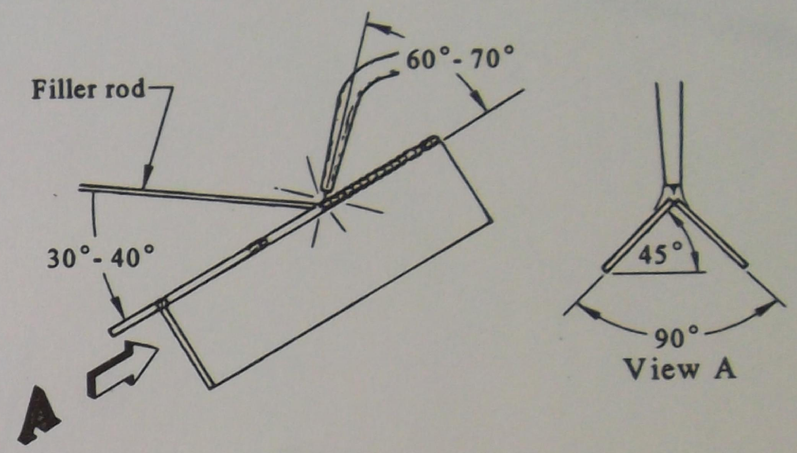

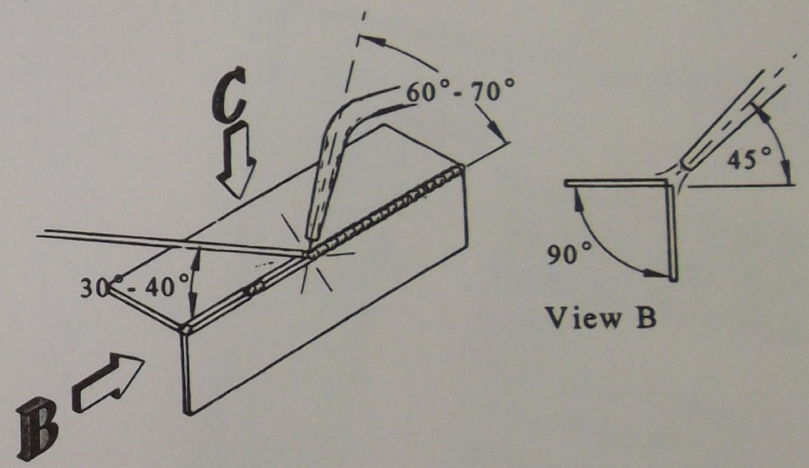

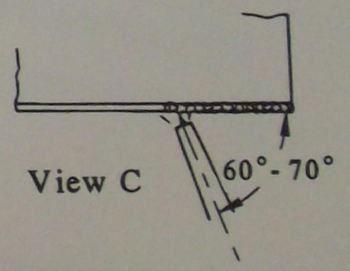

Notes

Section 9: Oxyacetylene welding - fillet weld

SUGGESTED DURATION	PREAMBLE
1 hour 15 minutes	This section enables you to safety deposit fillet welds in the flat position.

Objectives

At the end of this section you will be able to:

- ☐ deposit fillet weld in the flat position on 1.6 mm thick sheet to the following requirements
  - correct alignment and assembly with angular distortion 0°- 5°
  - weld size 3^{+2}_{-1} mm
  - a maximum of three significant weld defects per 150 mm weld length with an accumulative defect area not exceeding 10 mm square per weld
- ☐ record the weld procedure
- ☐ follow Occupational Health & Safety workshop procedures.

Safety

- Follow Occupational Health & Safety workshop procedures.
- Wear the proper eye protection.
- Direct the flame away from regulators, hoses, clothes and other people.
- Mark your finished work **HOT** to warn others not to touch it.
- At all times observe safety procedures when handling or using oxygen and acetylene.

Procedure sheet
Oxyacetylene welding - fillet weld

Sketch			
Gas data		**Consumables data**	
Regulator		Filler type	
Pressure O_2	C_2H_2	Filler diameter	
Flame type		Angles Torch	Wire
Weld tip size			
Material data		**Weld time**	
Type		Start	
Thickness		Finish	
		Units completed	
Assessment		**Complies**	**Does not comply**
Alignment			
Weld size			
Weld defects			
Name		**Exercise Number**	

Skill practice 5
Assessment event 3 (practical)
Oxyacetylene welding - fillet weld

IF IN DOUBT ASK YOUR TEACHER

Suggested time Skill practice: 1 hour 15 minutes
Assessment: 15 minutes

Objective To weld deposit fillet welds to the requirements given below.

Position Flat.

Procedure Demonstrated by the teacher.

Method

1. Wire brush sheet to remove rust or scale from the fusion zone.
2. Align sheets at 90°.
3. Tack weld and check alignment, adjust if necessary to 90°.
4. Weld approximately 50 mm and check bead profile and penetration.
5. Complete the weld.
6. Submit your work for evaluation and complete the procedure sheet.
7. For assessment, repeat the fillet weld to the requirements given below.

Requirements

- Correct alignment and assembly
- Weld size 3^{+2}_{-1} mm
- A maximum of 3 significant weld defects per 150 mm weld length with an accumulative defect area not exceeding 10 mm square per weld

Material unit 2 pieces 25 x 1.6 x 150 mm low carbon steel
2 pieces 50 x 1.6 x 150 low carbon steel

Unit required 2

Economy Align and tack plates as directed. Join all filler rod ends and return all unused material to the store.

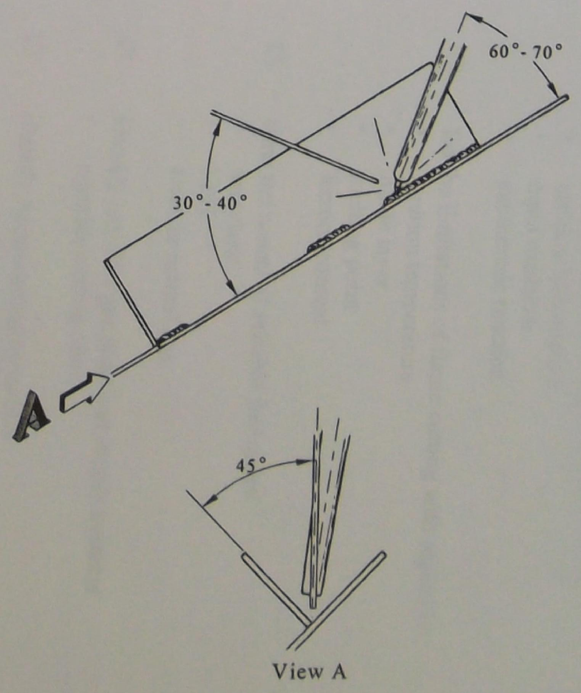

View A

SUGGESTED DURATION	PREAMBLE
1 hour	This section introduces you to oxy-fuel ...

... Flame cutting theory

Skill practice 5
Assessment event 3 (practical)
Oxyacetylene welding - fillet weld

IF IN DOUBT ASK YOUR TEACHER

Suggested time Skill practice: 1 hour 15 minutes
Assessment: 15 minutes

Objective To weld deposit fillet welds to the requirements given below.

Position Flat.

Procedure Demonstrated by the teacher.

Method

1. Wire brush sheet to remove rust or scale from the fusion zone.
2. Align sheets at 90°.
3. Tack weld and check alignment, adjust if necessary to 90°.
4. Weld approximately 50 mm and check bead profile and penetration.
5. Complete the weld.
6. Submit your work for evaluation and complete the procedure sheet.
7. For assessment, repeat the fillet weld to the requirements given below.

Requirements

- Correct alignment and assembly
- Weld size 3^{+2}_{-1} mm
- A maximum of 3 significant weld defects per 150 mm weld length with an accumulative defect area not exceeding 10 mm square per weld

Material unit 2 pieces 25 x 1.6 x 150 mm low carbon steel
2 pieces 50 x 1.6 x 150 low carbon steel

Unit required 2

Economy Align and tack plates as directed. Join all filler rod ends and return all unused material to the store.

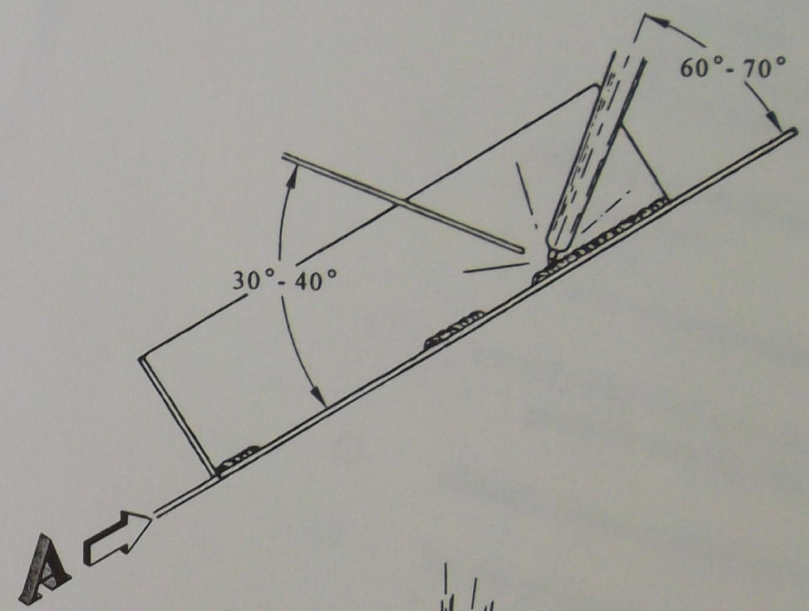

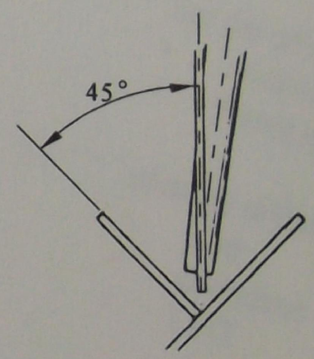

View A

Notes

Section 10: Flame cutting theory

SUGGESTED DURATION	PREAMBLE
1 hour 30 minutes	This section introduces you to oxy-fuel gas flame cutting, safely requirements and the equipment used.

Objectives

At the end of this section you will be able to:

- ☐ describe the basic principles of flame cutting
  - ignition temperature
  - rapid oxidation
  - exothermic reaction
- ☐ list the limitations of flame cutting with regard to:
  - ignition temperature
  - oxide layer
  - melting point
  - ferrous content
- ☐ state the names of suitable fuel gases
  - acetylene
  - LPG
  - town or natural gas
- ☐ identify oxy-fuel gas plant and supply systems
  - portable cutting plant
- ☐ identify flame cutting apparatus
- ☐ list the advantages of flame cutting apparatus
  - multi-purpose blowpipe
  - flame cutting attachment
- ☐ identify different types of flame cutting nozzles
  - size
  - acetylene
  - LPG
- ☐ use appropriate text or manufacturers' information to select the equipment and gas pressures necessary to flame cut steel from 6 to 12 mm thick

- ☐ identify the conditions that give a satisfactory flame cut surface
  - nozzle condition
  - gas pressures and flame setting
  - nozzle height
  - cutting speed
  - material surface condition
- ☐ list the flame cutting methods
  - freehand
  - guided
  - machine
- ☐ discuss the safety factors of flame cutting and flame gouging
  - cylinder location
  - equipment maintenance
  - protective clothing
  - molten oxide stream.

Cutting torches
There are two main types of manual flame cutting tool

Flame (thermal) cutting process

The flame cutting process used for cutting iron and steel depends on a chemical reaction between heated iron and oxygen.

The theory of the flame cutting reaction
When a piece of iron or steel is heated to a temperature of 815°C (the *ignition temperature)* the material will burn to form a lower melting point substance called iron oxide.

The chemical reaction from burning generates a great deal of heat. This heat enables the cutting to continue. Once the metal begins to burn, the heat generated will lead to a spread of oxidisation through the material. This important property of flame cutting allows you to cut and pierce thick steel without overall heating of the metal.

The *ignition temperature* is the temperature at which the chemical reaction begins. The ignition temperature for low carbon steel is 815°C. This is well below its melting temperature which is about 1,450°C.

The steps of the flame cutting action
1. Use the flame to raise a small section of the metal to ignition temperature.
2. Release a high speed jet of oxygen on the heated section.
3. By controlling the direction of the blowpipe nozzle and combining it with the oxidising action, cut through the metal. The width of the cut through the steel is called the *kerf.*

The cutting action is a function of the high speed jet of oxygen. The purpose of the flame is to heat the metal to its ignition temperature so that the cutting can begin. Theoretically, once the cutting begins, the flame shouldn't be necessary. However, heat is lost from the work through conduction, so it's necessary to keep the pre-heat flame going while you're working.

The most common gas combinations used for pre-heat are oxyacetylene and oxy-LPG (Liquefied petroleum gas).

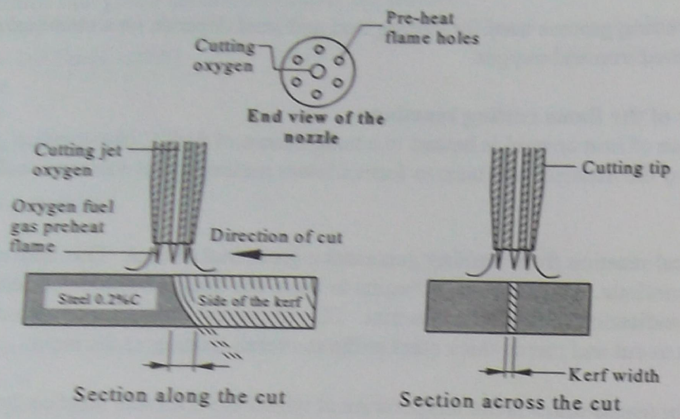

Flame cutting

Limitations

Because flame cutting depends on a chemical reaction (oxidisation) between heated iron and oxygen, you can normally only use it on metals which are basically iron. Non-ferrous metals (such as copper, brass, aluminium) cannot be flame cut.

For a metal is to be readily flame cut, it needs to have:

- an ignition temperature below its melting point so that the metal can be cut without being melted by the flame
- a higher melting point than the oxide or slag that forms from the cutting action.

Cutting equipment

The portable flame cutting plant is the same as for oxyacetylene welding except for the cutting torch or cutting attachment connected to the hoses. The plant consists of the following components.

- Oxygen cylinder
- Acetylene cylinder
- Gas regulators
- Hoses
- Cutting torch
- Cutting nozzle
- Cylinder trolley

Cutting torches

There are two main types of manual flame cutting torches:

- Multiple-purpose cutting torches that are heavy duty cutting and gouging units
- Cutting attachments that are used with a normal welding blowpipe - these units are cheaper and more versatile than the multi-purpose unit but is not as robust and does not have the thickness cutting capacity.

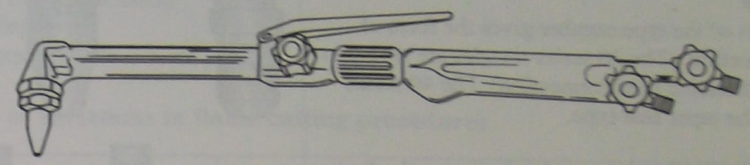

Blowpipe attachment with handle

Cutting technique

The torch can be hand guided (free hand) for normal industrial use. However there are aids (such as a roller guide attachment) to steady the cutting torch movement and improve the quality of the cut.

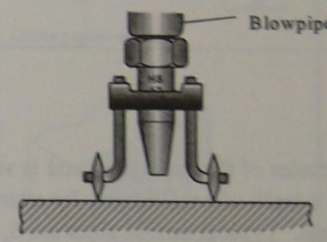

Roller guide attachment

Cutting nozzles

Cutting nozzles are designed for different thicknesses and applications. Each nozzle is stamped to indicate the size, type of fuel gas and process.

Oxyacetylene cutting nozzles

Nozzle identification

Every cutting nozzle or tip is stamped for easy identification. The stampings indicate the type of nozzle, the size of nozzle and special process identification.

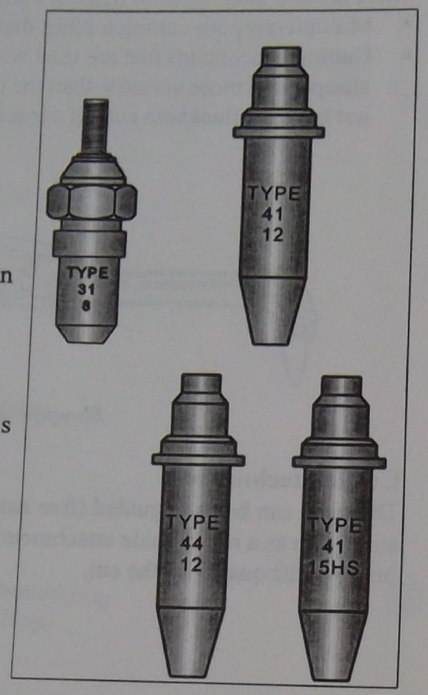

Nozzle type

The first part of the type number gives the form of nozzle connection. The 30 series nozzles are screw-in type with a threaded inlet connection. The 40 series nozzles are the taper seat type.

The second part of the type number indicates the fuel gas used. If the type number ends in a '1' the nozzle is used with acetylene, if it ends in '4' it is used with LP gas.

Gas number identification

1 Acetylene
2 Low pressure acetylene
3 Coal gas
4 LP gas
5 Hydrogen

Size of nozzle

The size number tells you the diameter of the main bore and is stamped underneath the type number. The size number is a tenth of a millimetre for example, a size 12 nozzle has a main bore diameter of 1.2 mm. Typical nozzle sizes are 6, 8, 12, 15 and 20.

Machine cutting

Flame cutting machines are an essential piece of equipment in engineering workshops that make machine parts or structural steel components. These machines have great advantages over manual cutting, especially for accurately cutting thick sections or for cutting multiple items, as they hold the blowpipe rigidly at the correct distance from the work with an even cutting speed.

Safety

Be careful when flame cutting and/or gouging as the cutting stream can shower hot metal sparks to great distances. The protective clothing you need for flame cutting and/or gouging is the same as for welding.

- Overalls
- Oxy goggles (shade 5 filter)
- Leather gloves
- Leather apron
- Steel capped boots
- Spats

Keep all equipment in good order and report any faulty or damaged equipment to your supervisor.

Cut quality

Factors which will affect the quality of the cut are:

- metal composition
- surface cleanliness - free from such thing as paint, oil, grease
- cutting nozzle size and condition
- gas pressures
- size of preheat flame
- cutting speed
- distance nozzle is from job.

Effects of variations in flame cutting procedures

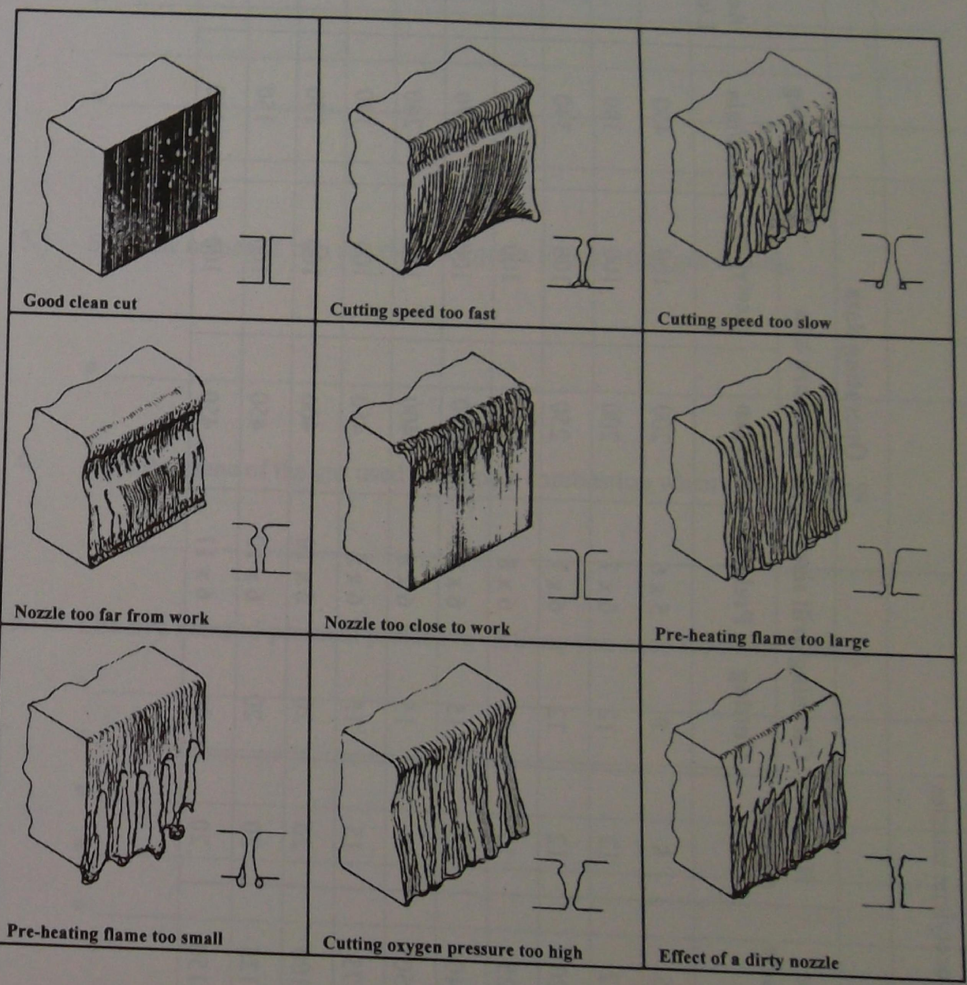

Section 11: Flame cutting and heating

Review questions

These questions will help you revise what you've learnt in Section 10.

1. State the ignition temperature of low carbon steel.

   _____

2. State **two** basic steps for flame cutting other than the one given below.

   - The flame is used to raise a small section of metal to ignition temperature.
   - _____
   - _____
   - _____
   - _____

3. State the names of **two** suitable fuel gases for oxy-fuel gas cutting.

   - _____
   - _____

4. State the name of the gas used to support combustion when flame cutting.

   _____

5. List **five** items of personal protective clothing you need for flame cutting.

   - _____
   - _____
   - _____
   - _____
   - _____

Reference chart: Recommended flame cutting operating data

Type 41 - Taper seat acetylene nozzles

Plate thickness mm	Nozzle size	Cleaning drill size		Operating data				
				Pressure kPa		Cutting speed mm/min	Consumption	
		Cutting	Preheat	Oxygen	Acetylene		Acetylene L/min	Oxygen L/min
6	8	8	5 x 6	200	100	450	3.5	17.5
12	12	12	6 x 7	200	100	380	4	38
20	12	12	6 x 7	250	100	340	4.5	42
25	15	15	6 x 8	220	100	320	6	56
40	15	15	6 x 8	350	100	270	7	75
50	15	15	6 x 8	400	100	240	7.5	85
75	15	15	6 x 8	450	100	180	8	95
100	20	20	6 x 10	400	100	150	9	134
125	20	20	6 x 10	450	100	150	10	155
150	20	24	6 x 11	450	100	130	11	211

Review questions

6. State the meaning of the numbers on a cutting nozzle.

   Type 41: _____

   No. 12: _____

7. Use the Reference Chart to find the recommended nozzle size and gas pressures for flame cutting 6 mm thick low carbon steel.

   Nozzle size: _____

   Acetylene: _____

   Oxygen: _____

8. List the factors which will affect a flame cut finish. One of the factors is given.

   - Material's surface - it should be clean and free from such things as paint, oil, grease.
   - _____
   - _____
   - _____
   - _____
   - _____

Section 11: Flame cutting and heating

SUGGESTED DURATION	PREAMBLE
2 hours 30 minutes	This section enables you to safely flame cut low carbon steel plate.

Objectives

At the end of this section you will be able to:

- ☐ open and close down a flame cutting plant
- ☐ use manual, guided and machine (straight line) cutting methods
- ☐ flame cut 6 mm and 10 mm thick low carbon steel plate to the following requirements
  - flame cut surfaces to exhibit a smooth profile free from excessive nicking and adhering slag
  - cutting accuracy to the marked line ± 2 mm
- ☐ record the flame cutting procedure
- ☐ heat and bend flat bar
- ☐ follow Occupational Health & Safety workshop procedures.

Safety

- Follow all Occupational Health & Safety workshop procedures.
- Always wear safety goggles when flame cutting.
- Always use a flint gun or lighter to ignite the blow pipe. NEVER use matches.
- Turn the cutting torch off when you have finished a job or before putting the torch down.

Procedure sheet
Flame cutting - angle and roller guides

Sketch	

as data	
gulator	
essure O_2 C_2H_2	
me type	
tting nozzle size	
terial data	Weld time
e	Start
ckness	Finish
	Units completed

arks		Complies	Does not comply
	Exercise 1		
uracy	Exercise 2		
	Exercise 1		
urface	Exercise 2		
tion			
		Exercise Number	

Skill practice 6

Flame cutting - angle and roller guides

IF IN DOUBT ASK YOUR TEACHER

Objective To connect a flame cutting plant and cut, 6 and 10 mm low carbon steel to the requirements given below.

Position Flat.

Procedure Demonstrated by the teacher.

Method
1. Mark out and prick punch the cutting line locations for Exercises 1 and 2.
2. Establish correct cutting techniques for Exercises 1 and 2 using scrap material.

Exercise 1: Flame cut 10 mm plate as illustrated, using:
a) an angle guide b) a roller guide.
Exercise 2: Flame cut 6 mm plate as illustrated, using:
a) an angle guide b) a roller guide.

3. Evaluate the work and complete the procedure sheet.
4. Submit your work to the teacher.

Requirements
- Assemble and activate oxyacetylene cutting plant
- Flame cut surfaces to exhibit a smooth profile free from adhering slag and excessive nicking
- Accuracy to be maintained to ±2 mm of marked line

Material unit **Exercise 1**: 1 piece 150 x 10 x 300 mm low carbon steel
Exercise 2: 1 piece 150 x 6 x 300 mm low carbon steel

Unit required 1

Economy Practise flame cutting on scrap material.
Return all unused material to the store.

Exercise 1
10 mm plate

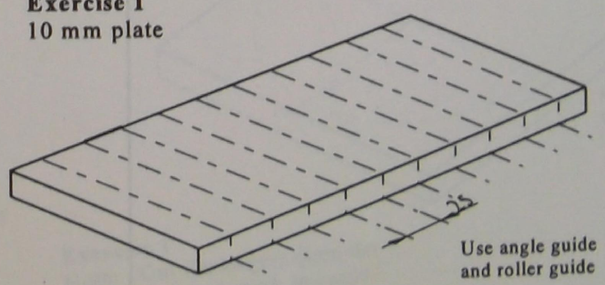

Exercise 2
6 mm plate

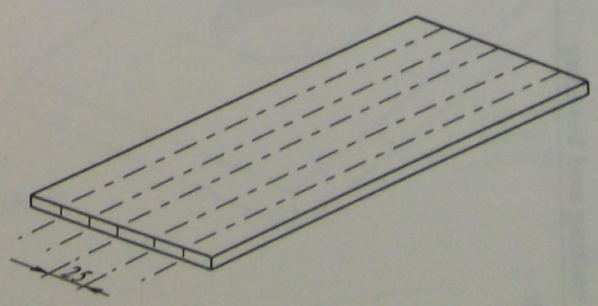

Skill practice 6

Flame cutting - angle and roller guides

IF IN DOUBT ASK YOUR TEACHER

Objective To connect a flame cutting plant and cut, 6 and 10 mm low carbon steel to the requirements given below.

Position Flat.

Procedure Demonstrated by the teacher.

Method

1. Mark out and prick punch the cutting line locations for Exercises 1 and 2.
2. Establish correct cutting techniques for Exercises 1 and 2 using scrap material.

Exercise 1: Flame cut 10 mm plate as illustrated, using:
a) an angle guide b) a roller guide.
Exercise 2: Flame cut 6 mm plate as illustrated, using:
a) an angle guide b) a roller guide.

3. Evaluate the work and complete the procedure sheet.
4. Submit your work to the teacher.

Requirements

- Assemble and activate oxyacetylene cutting plant
- Flame cut surfaces to exhibit a smooth profile free from adhering slag and excessive nicking
- Accuracy to be maintained to ±2 mm of marked line

Material unit
Exercise 1: 1 piece 150 x 10 x 300 mm low carbon steel
Exercise 2: 1 piece 150 x 6 x 300 mm low carbon steel

Unit required 1

Economy Practise flame cutting on scrap material.
Return all unused material to the store.

Exercise 1
10 mm plate

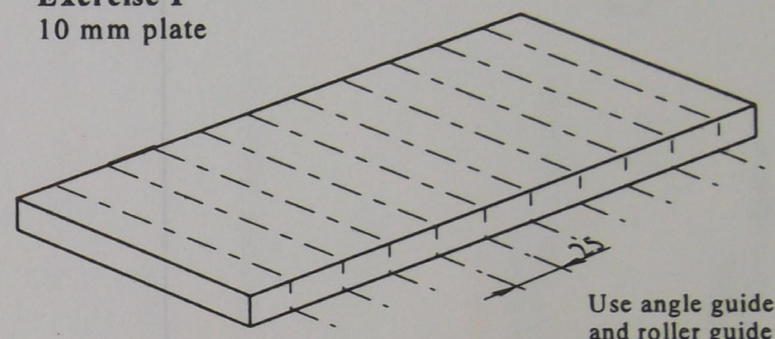

Use angle guide
and roller guide

Exercise 2
6 mm plate

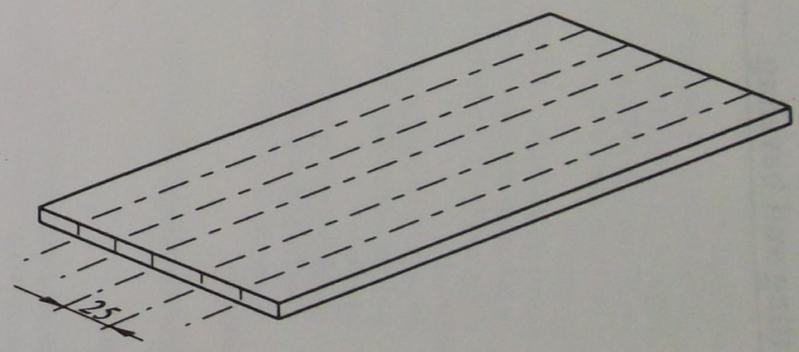

Use angle guide
and roller guide

Nozzle identification

Procedure sheet
Flame cutting and beveling

Sketch	
Gas data Regulator Pressure O_2 C_2H_2 Flame type Cutting nozzle size	
Material data Type Thickness	**Weld time** Start Finish Units completed

Assessment		**Complies**	**Does not comply**
Accuracy	Ex 1		
	Ex 2		
Cut surface condition	Ex 1		
	Ex 2		

Name	**Exercise Number**

Skill practice 7
Assessment event 4 (practical)
Flame cutting and beveling

IF IN DOUBT ASK YOUR TEACHER

Suggested time Skill practice: 45 minutes
Assessment: 15 minutes

Objective To connect a flame cutting plant and cut, bevel 10 mm low carbon steel to the requirements given below.

Position Flat.

Procedure Demonstrated by the teacher.

Method

Exercise1
1. Mark out and prick punch the cutting line locations.
2. Using scrap material, establish the correct cutting technique.
3. Using a circle cutting attchment, flame cut the circular flanges to the sizes shown.
4. Evaluate the work and complete the procedure sheet.
5. Submit completed work to the teacher.

Exercise 2
1. Mark out and prick punch the cutting line locations.
2. Using scrap material, establish the correct cutting technique.
3. Using an appropriate cutting guide, flame cut two 45° bevel edges as illustrated.
4. Using free hand techniques, flame cut two 45° bevel edges as illustrated.
5. Using free hand techniques, cut the hole as shown.
6. Evaluate the work and complete the procedure sheet.
7. For assessment, repeat steps 1 to 5 of Exercise 2 to the following requirements.

Requirements
- Assemble and activate oxyacetylene cutting plant
- Flame cut surfaces to exhibit a smooth profile free from adhering slag and excessive nicking
- Accuracy to be maintained to ± 2 mm of marked line

Material unit Exercise 1: 1 pieces 200 x 10 x 200 mm low carbon steel
Exercise 2: 2 piece 200 x 10 x 200 mm low carbon steel

Unit required 1

Economy Practise flame cutting on scrap material Return all unused material to the store.

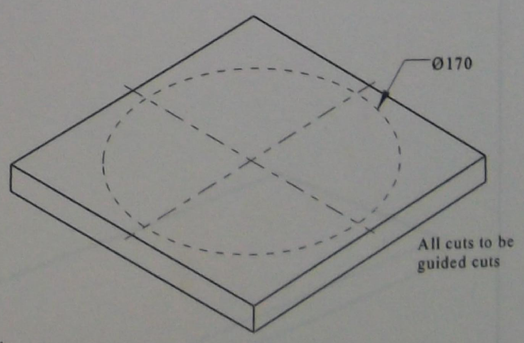

Exercise 1
Note: Cut the largest diameter first and work inwards

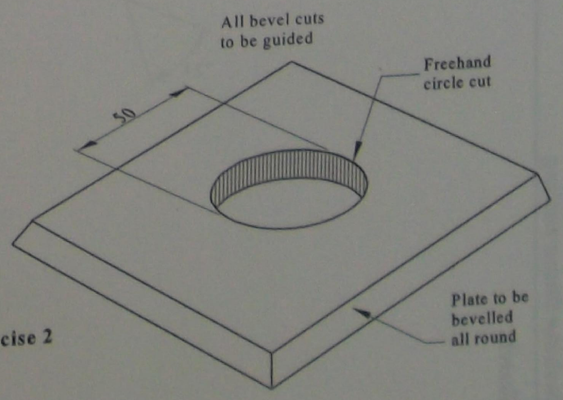

Exercise 2

Skill practice 7
Assessment event 4 (practical)
Flame cutting and beveling

IF IN DOUBT ASK YOUR TEACHER

Suggested time Skill practice: 45 minutes
Assessment: 15 minutes

Objective To connect a flame cutting plant and cut, bevel 10 mm low carbon steel to the requirements given below.

Position Flat.

Procedure Demonstrated by the teacher.

Method

Exercise1

1. Mark out and prick punch the cutting line locations.
2. Using scrap material, establish the correct cutting technique.
3. Using a circle cutting attchment, flame cut the circular flanges to the sizes shown.
4. Evaluate the work and complete the procedure sheet.
5. Submit completed work to the teacher.

Exercise 2

1. Mark out and prick punch the cutting line locations.
2. Using scrap material, establish the correct cutting technique.
3. Using an appropriate cutting guide, flame cut two 45° bevel edges as illustrated.
4. Using free hand techniques, flame cut two 45° bevel edges as illustrated.
5. Using free hand techniques, cut the hole as shown.
6. Evaluate the work and complete the procedure sheet.
7. For assessment, repeat steps 1 to 5 of Exercise 2 to the following requirements.

Requirements

- Assemble and activate oxyacetylene cutting plant
- Flame cut surfaces to exhibit a smooth profile free from adhering slag and excessive nicking
- Accuracy to be maintained to ± 2 mm of marked line

Material unit
Exercise 1: 1 pieces 200 x 10 x 200 mm low carbon steel
Exercise 2: 2 piece 200 x 10 x 200 mm low carbon steel

Unit required 1

Economy Practise flame cutting on scrap material Return all unused material to the store.

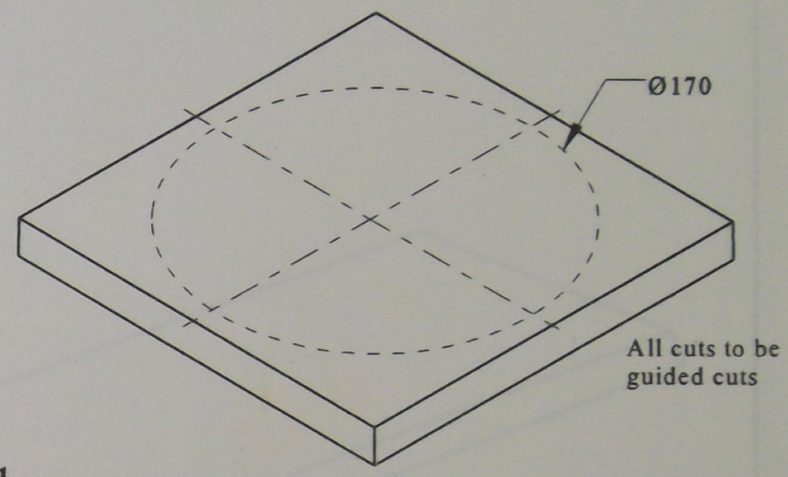

Exercise 1
Note: Cut the largest diameter first and work inwards

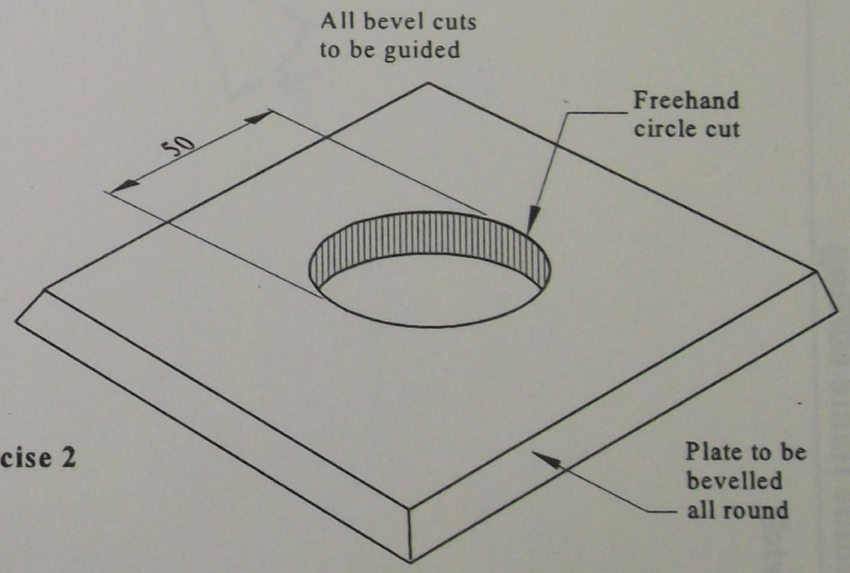

Exercise 2

Procedure sheet
Machine flame cutting

Sketch

s data	**Speed of cut**
gulator	45° bevel
ssure O_2	C_2H_2 90° cut
me type	
tting nozzle size	
terial data	**Weld time**
e	Start
kness	Finish
	Units completed
ssment	**Complies** / **Does not comply**
uracy	
urface	
tion	
	Exercise Number

Skill practice 8
Assessment event 5 (practical)
Machine flame cutting

IF IN DOUBT ASK YOUR TEACHER

Suggested time Skill practice: 15 minutes
Assessment: 15 minutes

Objective To machine flame cut 10 mm low carbon steel to the requirements given below.

Position Flat.

Procedure Demonstrated by the teacher.

Method
1. Mark out the cutting line locations.
2. Using scrap metal, establish correct cutting techniques.
3. Flame cut 10 mm plate as illustrated, using the straight line machine with the nozzle set at 45°.
4. Evaluate your work and complete the procedure sheet.
5. For assessment repeat Steps 1 to 3 to the requirements given below.

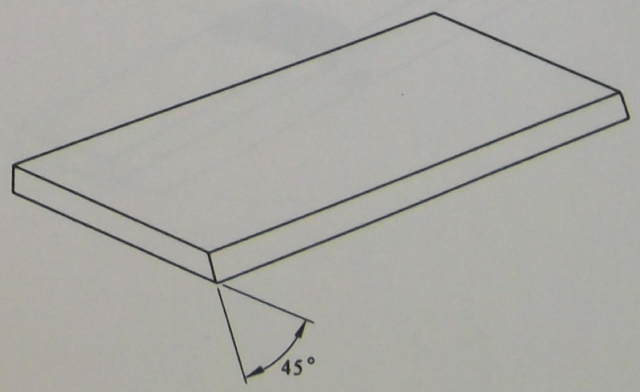

Requirements
- Flame cut surfaces to have a smooth profile free from adhering slag and excessive nicking
- Accuracy to be maintained to ±2 mm of marked line

Material unit 1 piece 150 x 10 x 300 low carbon steel

Unit required 1

Economy Practise flame cutting on scrap material. Return all unused material to the store.

Skill practice 8
Assessment event 5 (practical)
Machine flame cutting

IF IN DOUBT ASK YOUR TEACHER

Suggested time Skill practice: 15 minutes
Assessment: 15 minutes

Objective To machine flame cut 10 mm low carbon steel to the requirements given below.

Position Flat.

Procedure Demonstrated by the teacher.

Method

1. Mark out the cutting line locations.
2. Using scrap metal, establish correct cutting techniques.
3. Flame cut 10 mm plate as illustrated, using the straight line machine with the nozzle set at 45°.
4. Evaluate your work and complete the procedure sheet.
5. For assessment repeat Steps 1 to 3 to the requirements given below.

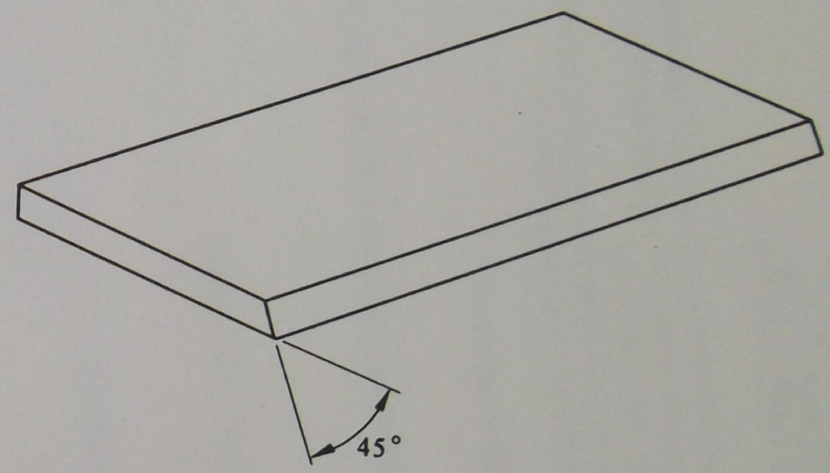

Requirements

- Flame cut surfaces to have a smooth profile free from adhering slag and excessive nicking
- Accuracy to be maintained to ±2 mm of marked line

Material unit 1 piece 150 x 10 x 300 low carbon steel

Unit required 1

Economy Practise flame cutting on scrap material. Return all unused material to the store.

re sheet
and bending

	Speed of cut 45° bevel 90° cut
C_2H_2	
zle size	
ta	**Weld time** Start Finish Units completed
	Complies / **Does not comply**
	Exercise Number

Assessment event 6 (practical)

Heating and bending

IF IN DOUBT ASK YOUR TEACHER

Suggested time 30 minutes

Objective To heat and bend low carbon steel flat bar to the requirements given below.

Procedure Demonstrated by the teacher.

Mehtod
1. Mark areas to be heated using a scriber.
2. Heat the 1st mark as shown until bar is red right through for 10 mm each side of the mark.
3. Using the appropriate jig, bend the bar to 90° check and adjust.
4. Evaluate the exercise and submit for assessment.

Requirements
- Observe safety precautions
- All bends to be 90° ± 5°

Material unit 1 pieces 50 x 10 x 300 mm low carbon steel

Unit required 1

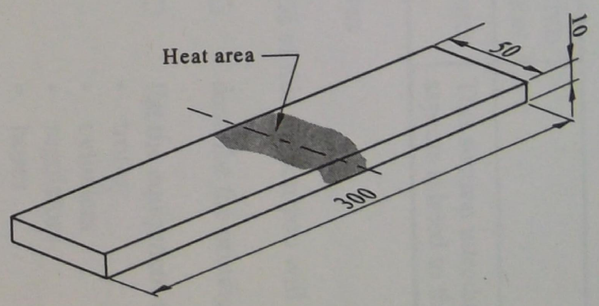

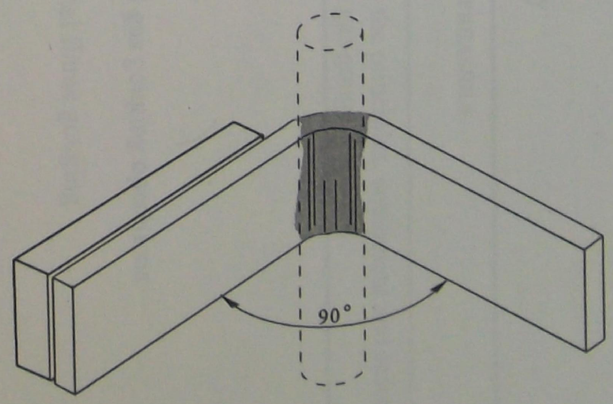

Notes

Steps in flame gouging

1. Hold the nozzle at an angle of 30°
ignition temp

Section 12: Flame gouging theory

SUGGESTED DURATION	PREAMBLE
30 minutes	This section introduces you to the principles, equipment and safety aspects related to the oxy-fuel gas gouging process.

Objectives

At the end of this section you will be able to:

- ☐ describe the principles of fuel gas gouging operations
- ☐ list the equipment for industrial flame gouging
  - trolley
  - cylinders
  - regulators
  - hoses
  - torch
  - nozzle
- ☐ describe typical industrial uses for flame gouging
  - weld preparation
  - defect removal.

Safety

- Always use the recommended equipment for the job.
- Protect your skin and eyes.

Flame gouging principles

Flame gouging (also called flame machining) is a process used to groove metal surfaces instead of cutting them. The nozzles used for flame gouging have a much larger opening for the cutting oxygen than the standard cutting types. The cutting jet uses a greater volume of oxygen at a lower velocity (speed). There is oxidisation over a wider area of metal, but the cut in the steel is shallower.

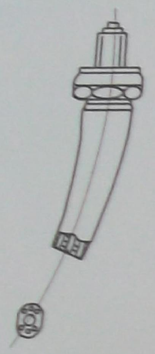

Flame gouging nozzle

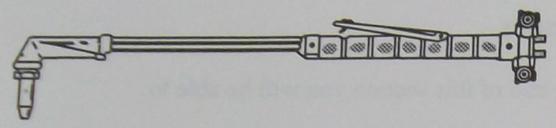

(a) Multi-purpose blowpipe

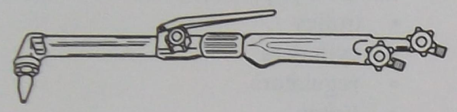

(b) Blowpipe attachment with handle

Many gouging nozzles are the bent type as shown in the illustration. Straight nozzles are also available.



Gouging out a fillet weld

Steps in flame gouging

1. Hold the nozzle at an angle of 30° to the surface of the work and heat a spot on the metal to ignition temperature (815°C).
2. Reduce the angle of the gouging nozzle as you apply the cutting oxygen.
3. Move the nozzle in the direction you want to make the groove. The molten slag is blown from the groove onto the surface of the metal in front of the flame.

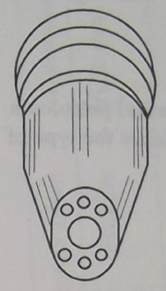

Flame gouging nozzle

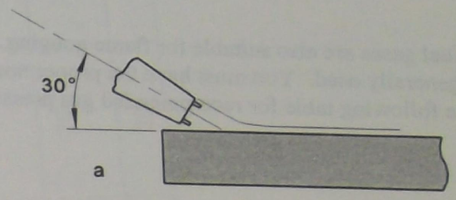

Angle of nozzle to surface of work

The width and depth of the groove are controlled by:

- size of nozzle
- cutting oxygen pressure
- angle of nozzle to work
- number of gouge passes made.

Note: The nozzle must not ride on the bottom of the groove.

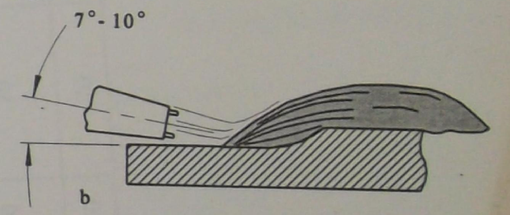

Angle between nozzle and plate

The illustration below shows how to deep gouge. After pre-heating, open the cutting oxygen valve and reduce the angle of the nozzle slowly. Increase the angle until you get the depth of gouge you want. When you move the nozzle forward 25 mm, the angle is reduced and it increases again as the depth increases. Repeat this until you've made the gouge length you need.

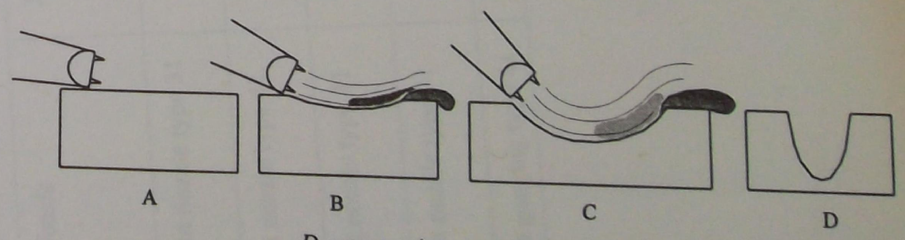

Deep gouging

Uses

Flame gouging is used in welded construction and repair work for:

- edge preparation for butt welds
- the remvoal of metal from the underside of butt welds to prepare them for full penetration welding
- the removal of defective sections (for example cracks and slag inclusions) of welded joints to prepare them for rewelding.

Fuel gases

Flame cutting fuel gases are also suitable for flame gouging. Acetylene or liquiefied petroleum gas (LPG) are generally used. You must have the proper nozzle design that matches the type of fuel gas. See the following table for recommended gas pressures.

	Nozzle	*Nozzle size*	*Regulator pressure kPa*		*Speed mm/min*	*Gas consumption L/min*		*Dimensions groove*	
			Oxygen	Fuel gas		Total oxygen	Fuel gas	Width mm	Depth mm
Acetylene	C227 straight nozzle type 31	32GS (13)	500-560	70	300-500	80-85	18	8	3-6
	C151 bent nozzle type 41	32GB (13)	500-560	70	300-500	80-85	15	8	3-6
	C152 bent nozzle type 41	48 GB (19)	560-630	70	500-650	135-120	18	10-11	5-10
	C153 bent nozzle type 41	64GB (25)	630-700	70	550-800	180-210	20	13	5-11
	C209 deep gouging type 41	60 (24)	280-350	70	3000-16000	80-85	20	13-20	13-20

Review questions

These questions will help you revise what you've learnt in Section 12.

1. State the names of **two** common fuel gases.

   - _____
   - _____

2. Sketch and identify the end view of a gouging nozzle.

3. *Tick the correct box.*

   (a) The volume of oxygen used for flame gouging when compared to flame cutting is:

   - ☐ higher
   - ☐ lower
   - ☐ the same.

   (b) Before you can initiate the flame cutting/gouging action, the temperature of the plate must be raised to:

   - ☐ 750°
   - ☐ 216°
   - ☐ 815°
   - ☐ 425°.

   (c) The angle of the gouging nozzle to the plate surface is approximately:

   - ☐ 10°
   - ☐ 20°
   - ☐ 30°
   - ☐ 40°.

Section 13: Flame gouging

SUGGESTED DURATION	PREAMBLE
45 minutes	This section enables you to safely use the flame gouging process for efficient metal grooving of low cabron steel metal and welded products.

Objectives

At the end of this section you will be able to:

- ☐ set up and operate a flame gouging plant to groove low carbon steel plate to the following requirements
  - smooth gouge surface free from adhering slag
  - depth and width of the groove consistent with the gouging nozzle specification with the groove section 4 mm wide +3 -1 mm to the required size
- ☐ record the flame gouging procedure
- ☐ follow Occupational Health & Safety workshop procedures.

Safety

- Always direct hot sparks and slag away from other people working in the area and away from flammable material.

Procedure sheet
Flame gouging - flat

Sketch			
Gas data		**Nozzle size**	
Regulator		Plot thickness	
Pressure 0_2	C_2H_2		
Flame type			
Weld tip size			
Material data		**Cutting time**	
Type		Start	
Thickness		Finish	
		Units completed	
Assessment		**Complies**	**Does not comply**
Alignment			
Weld size			
Weld defects			
Name		**Exercise Number**	

Skill practice 9
Assessment event 7 (practical)
Flame gouging - flat

IF IN DOUBT ASK YOUR TEACHER

Suggested time Skill practice: 45 minutes
Assessment: 15 minutes

Objective To flame gouge low carbon steel plate to the requirements given below.

Position Flat.

Procedure Demonstrated by the teacher.

Method
1. Mark out the line of gouging on plate surface.
2. Gouge approximately 70 mm of the length before stopping to examine the quality of the cut.
3. Make any procedural changes necessary and complete the gouge.
4. Repeat the procedure for the other nominated locations.
5. Turn the plate over and repeat the exercise on the 10 mm wide grooves.
6. Complete the procedure sheet.
7. For assesment, repeat the groove to the requirement given below.

Requirements
- Smooth gouge surface free from adhering slag
- Depth and width of the groove consistent with the gouging nozzle specification with the groove section 4 mm wide +3 -1 mm to the required size

Material unit 1 piece of 150 x 10 x 150 mm low carbon steel

Unit required 2

Economy Gouge both sides of plate for maxium use. Return all unused material to the store.

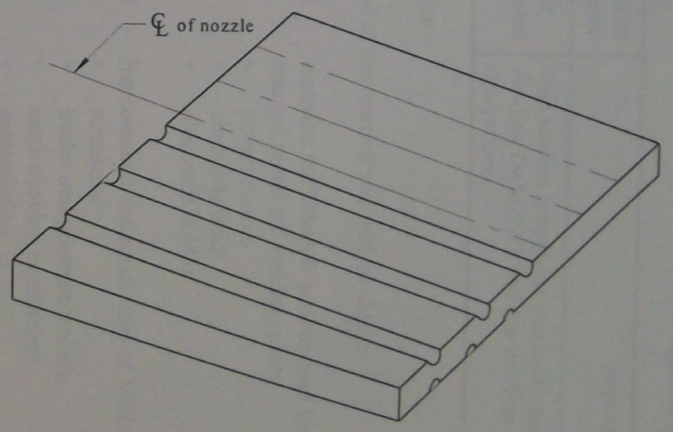

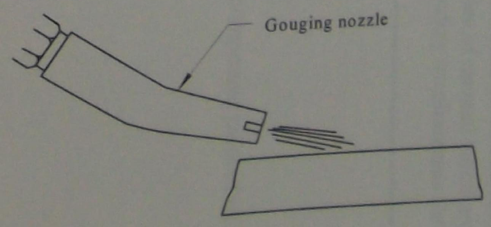

Skill practice 9
Assessment event 7 (practical)
Flame gouging - flat

IF IN DOUBT ASK YOUR TEACHER

Suggested time Skill practice: 45 minutes
Assessment: 15 minutes

Objective To flame gouge low carbon steel plate to the requirements given below.

Position Flat.

Procedure Demonstrated by the teacher.

Method

1. Mark out the line of gouging on plate surface.
2. Gouge approximately 70 mm of the length before stopping to examine the quality of the cut.
3. Make any procedural changes necessary and complete the gouge.
4. Repeat the procedure for the other nominated locations.
5. Turn the plate over and repeat the exercise on the 10 mm wide grooves.
6. Complete the procedure sheet.
7. For assesment, repeat the groove to the requirement given below.

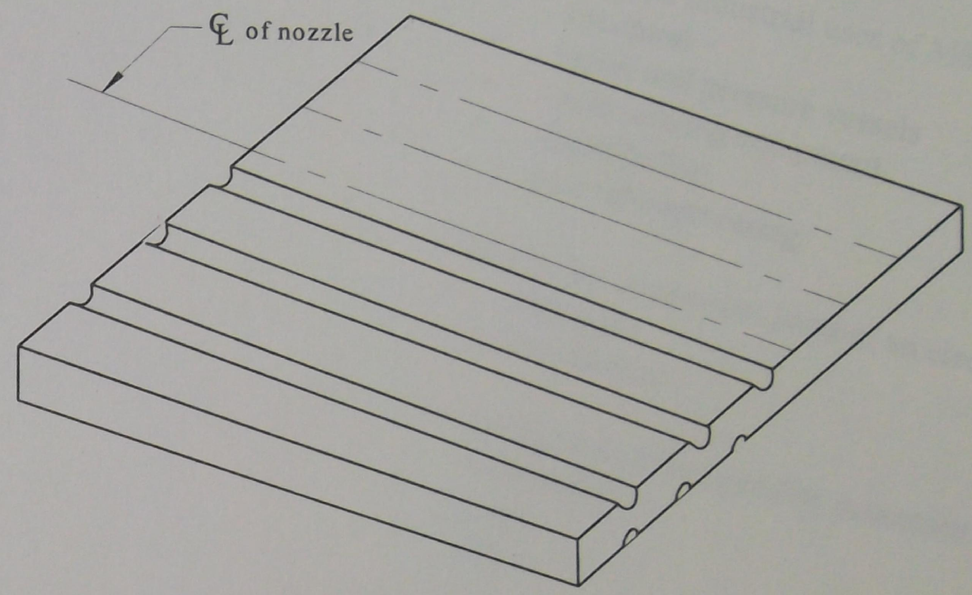

Requirements

- Smooth gouge surface free from adhering slag
- Depth and width of the groove consistent with the gouging nozzle specification with the groove section 4 mm wide +3 -1 mm to the required size

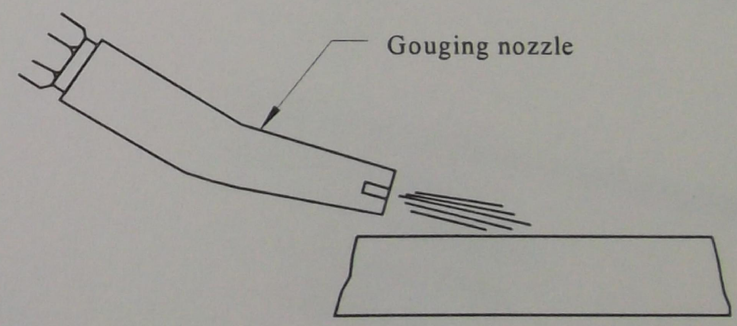

Material unit 1 piece of 150 x 10 x 150 mm low carbon steel

Unit required 2

Economy Gouge both sides of plate for maxium use. Return all unused material to the store.

Notes

Section 14: Manual metal arc welding theory

SUGGESTED DURATION	PREAMBLE
1 hour 30 minutes	This section introduces you to the basic principles of manual metal arc welding (MMAW), and the welding plant and safety requirements for this process.

Objectives

At the end of this section you will be able to:

- ☐ describe the MMAW process and identify the component parts of an a.c. manual metal arc welding plant
  - power source
  - electrode leads
  - electrode holder
- ☐ list common industrial uses of MMAW
  - structural
  - boiler and pressure vessels
  - earth moving equipment
  - shipbuilding
  - general engineering
- ☐ identify the component parts of an electrode
  - core wire
  - flux coating
- ☐ list the hazards of arc welding processes
  - electricity
  - heat
  - fumes
- ☐ list the protective clothing available for MMAW operators
  - eyes
  - body
  - feet
- ☐ describe the methods of reducing/removing welding fumes from the breathing zone
  - natural ventilation
  - exhaust systems
  - respirators.

Manual metal arc welding process

A welding machine provides the electrical energy to make an arc between the electrode and the workpiece. There has to be a strong enough electric current (amps) to melt the surface of the workpiece and the end of the electrode. The machine has a control which changes the amount of current to suit different welding conditions.

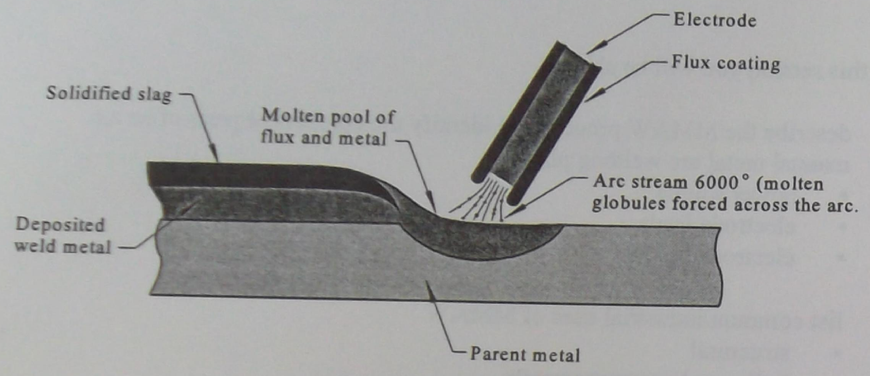

When the arc is formed, the temperature at the point of contact rises to about 6000°C. This intense heat is concentrated at the electrode end and the point of welding. It melts a small pool of metal in the workpiece and also melts the end of the electrode into globules of molten metal which are forced across the arc and into the weld pool on the work. The electrode flux coating melts, provides a gaseous shield around the arc and deposits a protective slag on the molten weld pool. The melting rate of the electrode metal depends on the amount of electric current used.

Uses

Manual metal arc welding is used for:

- structural steel work
- steel bridges
- pressure vessels
- tanks
- general fabrication
- earth moving equipment.

Equipment set-up

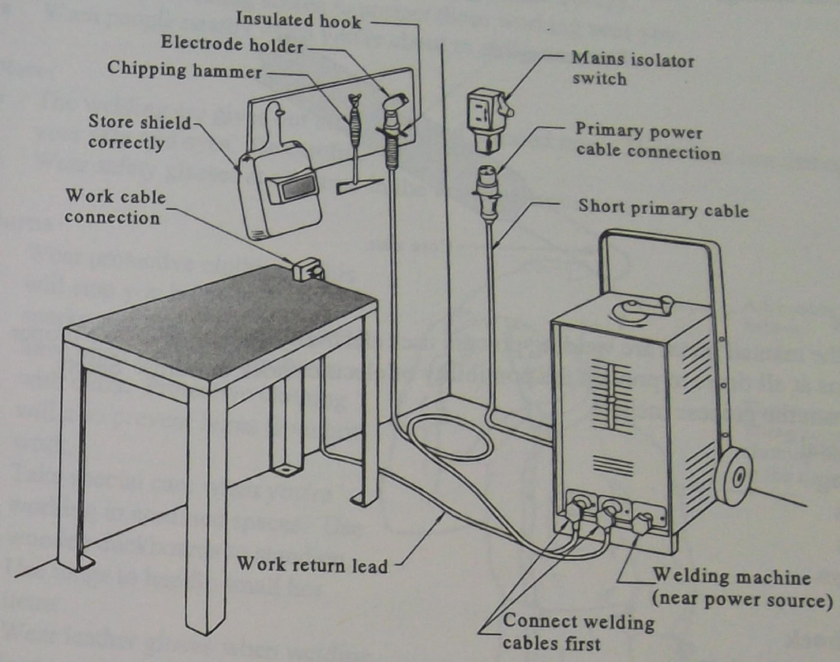

- Install the welding machine as near as possible to the mains power to keep the primary power cable short. *The primary power cables carry dangerously high voltages.*
- Inspect all cables for damage.
- Use welding cables that are fully insulated.
- Make sure the electrode holder is insulated from the bench. *Hang it on an insulated hook.*
- Switch off when not in use.

Electrodes

Electrode size is measured by the diameter of the corewire. You can use the manual metal arc welding process with welding current from about 40 amps to 400 amps depending on electrode size. Follow manufacturers' recommendations for flux types and current settings. These are always printed on the electrode packet.

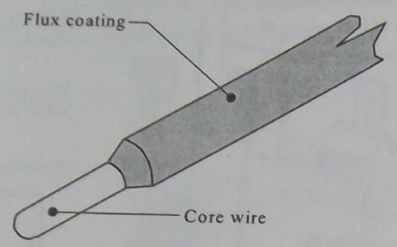

Hazards

Because the manual metal arc welding process uses electricity, you need to take proper precautions at all times to prevent the possibility of electric shock or burns. Safety hazards from the process include:

- hot metal
- hot slag
- sparks
- fumes
- arc rays

Electric shock

Avoid electric shock by:

- wearing dry insulated boots
- wearing dry leather gloves
- never changing electrodes with bare hands or wet gloves
- never cooling electrode holders in water
- working on a dry insulated floor where possible
- never holding the electrode and holder under your arm.

If there is an accident, turn off the power to the circuit **first**. When this isn't possible, clear the victim from the electrical source using dry non-conducting material.

Ventilation and fumes

- You must always have enough ventilation in confined spaces. Be alert to this at all times.
- Keep your head out of the fumes rising from the arc.
- Fumes from the welding of some metals are bad for you. Don't breathe them in. If you are welding on material such as stainless steel, nickel, nickel alloys or galvanised steel, further precautions are necessary .
- Wear a respirator when natural or forced ventilation is not good enough.

Protective clothing

Protect your eyes and skin from harmful arc radiations:

- Never watch the arc without wearing a welding shield. Protect your eyes. Wear a helmet with filters of the correct shade (eg. shade 10-13).
- Use a non-reflecting screen to protect those working near you.
- Warn people nearby when you're about to strike an arc.

Note:

- The welding arc gives out ultraviolet and infrared rays. These rays can damage your skin and eyes. Be careful.
- Wear safety glasses at all times in the work environment.

Burns

- Wear protective clothing. This will stop you being burnt by sparks and slag. You shouldn't have open pockets or trousers with cuffs. Protective clothing will also prevent burns from hot work.
- Take special care when you're working in confined spaces. Use wooden duckboards to stand on.
- Use tongs to handle small hot items.
- Wear leather gloves when welding. Inspect your gloves regularly for holes and thin patches. Don't depend on gloves to protect you when you're handling very hot items. Use tongs.
- Wear a skull cap and cape or jacket of chrome leather to protect you when welding in the overhead position.
- Write '*HOT*' on items which may be handled accidently before cooling.

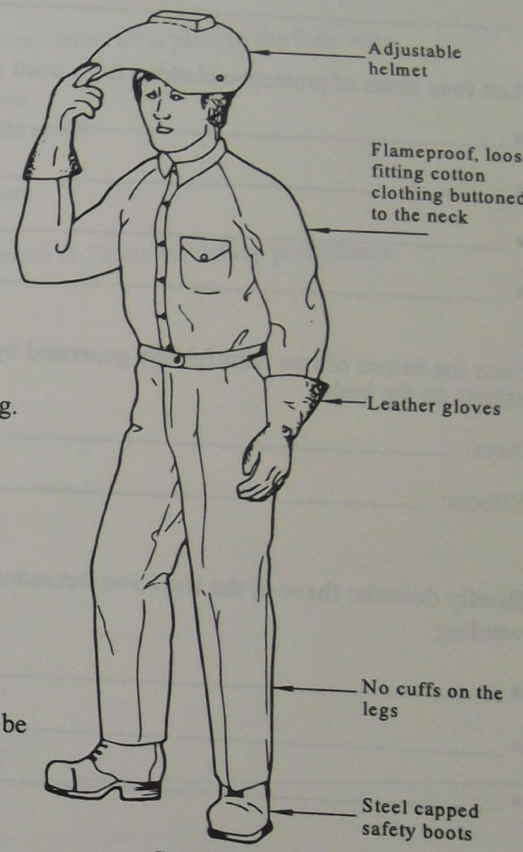

Suitable protective clothing

Review questions

These questions will help you revise what you've learnt in Section 14.

1. State the names of the component parts that make up a MMAW electrode.

   - _____
   - _____

2. What is the approximate temperature of the electric arc in manual metal arc welding?

   _____

3. List **four** items of protective clothing to be worn when MMAW.

   - _____
   - _____
   - _____
   - _____

4. State the names of **two** harmful rays generated by the electric arc and give their effects on the body.

   Rays: _____

   Effects: _____

5. Briefly describe **three** of the ways you can reduce the risk of electric shock when welding.

   - _____
   - _____
   - _____

Section 15: Manual metal arc welding - beads on plate

SUGGESTED DURATION	PREAMBLE
1 hour	This section enables you to safely deposit weld beads on low carbon steel plate.

Objectives

At the end of this section you will be able to:

- ☐ set up and activate a manual metal arc welding plant
- ☐ deposit weld beads on low carbon steel plate to the following requirements:
  - bead height 3^{+2}_{-1} mm
  - smooth regular weld profile
- ☐ record the weld procedure
- ☐ follow Occupational Health & Safety workshop procedures.

Safety

- Follow Occupational Health & Safety workshop procedures.
- Protect your eyes from the welding arc and wear the proper eye protection.
- Wear suitable protective clothing including dry leather gloves.

1. ...of the component parts that make up a MMA W electrode.

2.

3.

4.

5.

Procedure sheet
Manual metal arc welding - beads on plate

Sketch	
Weld current data Run 1 2 3 4 5 6	Run 7 8 9 10 11 12
Material data Type low carbon steel Thickness 10 mm	**Weld time** Start Finish Units completed
Remarks	**Complies** / **Does not comply**
Height of beads	
Restarts	
Spatter	
Name	**Exercise Number**

December 1997

Skill practice 10

Manual Metal Arc Welding - beads on plate

IF IN DOUBT ASK YOUR TEACHER

Objective To deposit uniform weld beads to the requirements given below.

Position Flat.

Procedure Demonstrated by the teacher.

Method

1. Position the plate on the bench so that a right handed operator would weld across the body from left to right (left hand opposite direction).
2. Deposit a weld bead along the plate length, maintaining the angles shown with an arc gap of approximately 2 mm.
3. Deposit additional runs parallel to the plate edge approximately 6 mm apart.
4. When the top surface of the plate has been covered, turn the material over and repeat Steps 1 to 4.
5. Evaluate the weld exercise and complete the procedure sheet.
6. Submit your work for evaulation.

Points to watch

- Amperage setting and heat input
- Position of the plate on the bench
- Correct method of arc striking
- Correct arc length
- Correct welding speed and travel
- Electrode angles

Requirements

- Beads to be uniform with consistent, even restarts, free from slag and splatter
- Bead height 3^{+2}_{-1} mm

Material unit 1 piece low carbon steel 75 x 10 x 225 mm

Unit required 1

Economy Materials and consumables are expensive. Use electrodes to 50 mm maximum stub length.

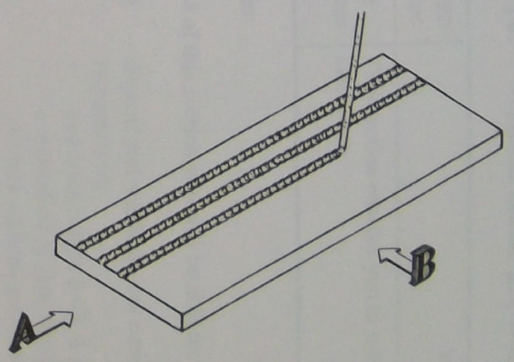

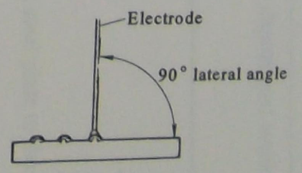

View A

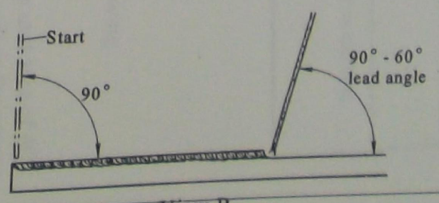

View B

Skill practice 10

Manual Metal Arc Welding - beads on plate

IF IN DOUBT ASK YOUR TEACHER

Objective To deposit uniform weld beads to the requirements given below.

Position Flat.

Procedure Demonstrated by the teacher.

Method

1. Position the plate on the bench so that a right handed operator would weld across the body from left to right (left hand opposite direction).
2. Deposit a weld bead along the plate length, maintaining the angles shown with an arc gap of approximately 2 mm.
3. Deposit additional runs parallel to the plate edge approximately 6 mm apart.
4. When the top surface of the plate has been covered, turn the material over and repeat Steps 1 to 4.
5. Evaluate the weld exercise and complete the procedure sheet.
6. Submit your work for evaulation.

Points to watch

- Amperage setting and heat input
- Position of the plate on the bench
- Correct method of arc striking
- Correct arc length
- Correct welding speed and travel
- Electrode angles

Requirements

- Beads to be uniform with consistent, even restarts, free from slag and splatter
- Bead height 3^{+2}_{-1} mm

Material unit 1 piece low carbon steel 75 x 10 x 225 mm

Unit required 1

Economy Materials and consumables are expensive. Use electrodes to 50 mm maximum stub length.

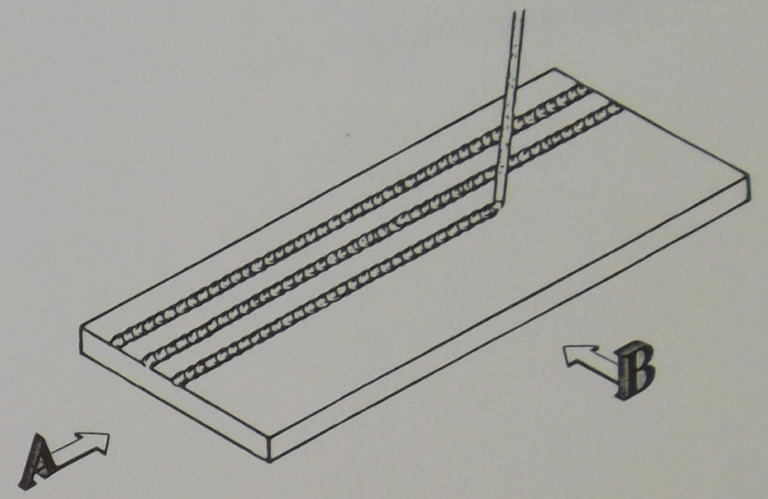

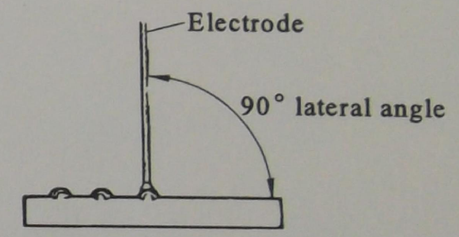

View A

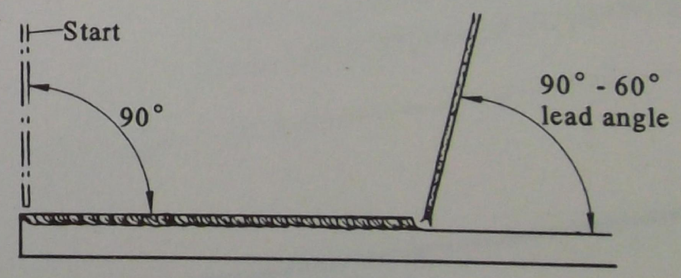

View B

Notes

Section 16: Manual metal arc welding - pad weld

SUGGESTED DURATION	PREAMBLE
1 hour 30 minutes	This section enables you to safely deposit pad welds on low carbon steel plate.

Objectives

At the end of this section you will be able to:

- ☐ deposit pad welds on low carbon steel plate to the following requirements
  - pad weld height 3 +2 -1 mm
  - a maximum of four significant surface defects in a unit area of 40 x 150 mm with an accumulative defect area not exceeding the square of the plate thickness
  - no adhering slag or spatter
- ☐ record the weld procedure
- ☐ follow Occupational Health & Safety workshop procedures.

Safety

- Follow Occupational Health & Safety workshop procedures.
- Use an approved shade 10 welding glass filter.
- Wear suitable protective clothing to stop ray burn.

Procedure sheet
Manual metal arc welding - pad weld

Sketch	
Weld current data Run 1 Run 7 2 8 3 9 4 10 5 11 6 12	**Electrode data** Size Type Brand name Electrode Angles Lead 60°-80° Lateral 90°
Material data Type low carbon steel Thickness 10 mm	**Weld time** Start Finish Units completed
Remarks	**Complies** / **Does not comply**
Height of beads	
Restarts	
Spatter	
Name	**Exercise Number**

Skill practice 11

Manual metal arc welding -pad weld

IF IN DOUBT ASK THE TEACHER

Objective To deposit a pad weld on low carbon steel plate to the requirements given below.

Position Flat.

Procedure Demonstrated by the teacher.

Method

1. Outline, with chalk, a rectangular shape 40 x 200 mm.
2. Position the plate on the bench.
3. Deposit weld beads along the plate length, maintaining the angles shown.
4. Remove all slag from individual weld beads before depositing subsequent runs. Each run must have a staggered stop and restart.
5. Build up the pad to the required dimensions and have your exercise inspected.
6. Evaluate the weld and complete the procedure sheet.
7. Submit your work for evaluation.

Points to *watch*

- Setting of amperage and heat input
- Position of the plate on the bench
- Correct method of arc striking
- Correct arc length
- Correct welding speed and travel
- Correct electrode angles

Requirements

- Pad weld height of 3 +2 -1 mm
- A maximum of four significant surface defects on a unit area of 40 x 150 mm with and accumulative area not exceeding the square of the plate thickness
- No adhering slag or splatter

Material unit 1 piece low carbon steel 75 x 10 x 225 mm

Unit required 1

Economy Use electrodes down to a stub length of 50 mm maximum.

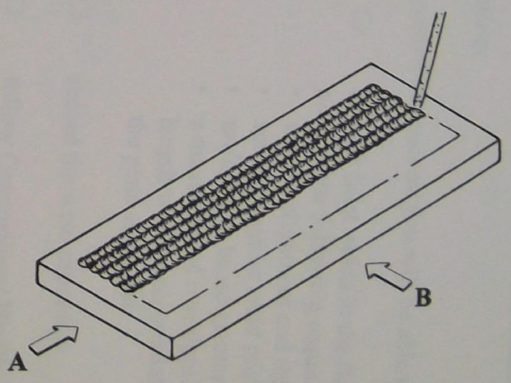

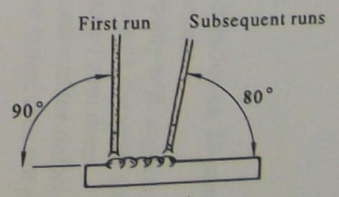

View A

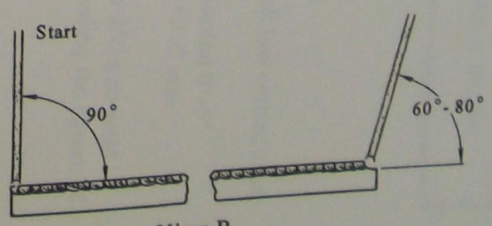

View B

Skill practice 11

Manual metal arc welding -pad weld

IF IN DOUBT ASK THE TEACHER

Objective To deposit a pad weld on low carbon steel plate to the requirements given below.

Position Flat.

Procedure Demonstrated by the teacher.

Method

1. Outline, with chalk, a rectangular shape 40 x 200 mm.
2. Position the plate on the bench.
3. Deposit weld beads along the plate length, maintaining the angles shown.
4. Remove all slag from individual weld beads before depositing subsequent runs. Each run must have a staggered stop and restart.
5. Build up the pad to the required dimensions and have your exercise inspected.
6. Evaluate the weld and complete the procedure sheet.
7. Submit your work for evaluation.

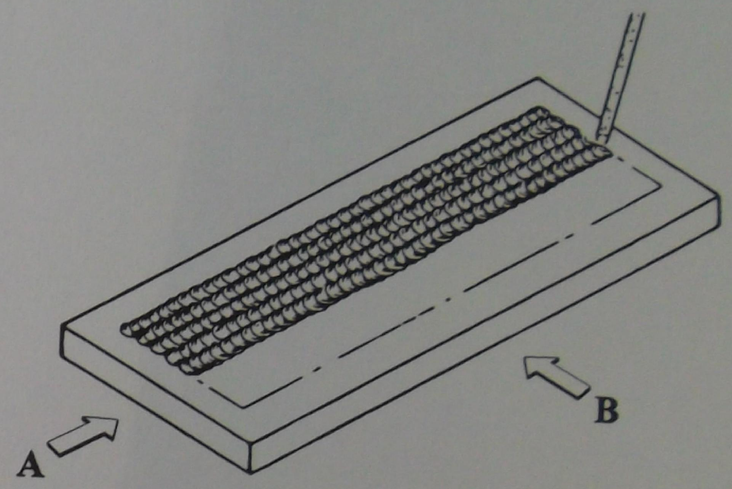

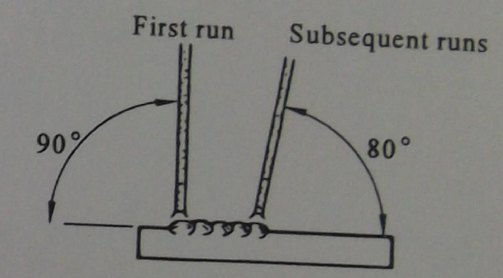

View A

Points to watch

- Setting of amperage and heat input
- Position of the plate on the bench
- Correct method of arc striking
- Correct arc length
- Correct welding speed and travel
- Correct electrode angles

Requirements

- Pad weld height of 3 +2 -1 mm
- A maximum of four significant surface defects on a unit area of 40 x 150 mm with and accumulative area not exceeding the square of the plate thickness
- No adhering slag or splatter

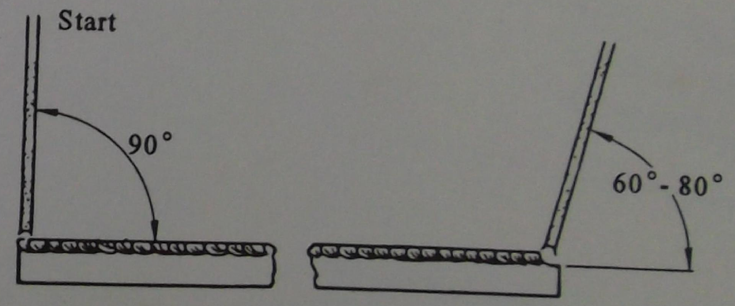

View B

Material unit 1 piece low carbon steel 75 x 10 x 225 mm

Unit required 1

Economy Use electrodes down to a stub length of 50 mm maximum.

Notes

Section 17: Manual metal arc welding - fillet weld

SUGGESTED DURATION	PREAMBLE
1 hour 45 minutes	This section enables you to safely deposit fillet welds in the flat position.

Objectives

At the end of this section you will be able to:

- ☐ deposit fillet welds in the flat position on 10 mm thick low carbon steel plate to the following requirements
  - correct alignment and assembly with angular distortion 0°-5°
  - smooth regular weld profile with the weld size 6 +2 -2 mm
  - undercut to be no greater than 1 mm deep
  - a maximum of two significant surface defects per 250 mm weld length with an accumulative defect area not exceeding the square of the plate thickness
- ☐ record the weld procedure
- ☐ follow Occupational Health & Safety workshop procedures.

Safety

- Follow Occupational Health & Safety workshop procedures.
- Wear the proper eye protection.
- Wear suitable protective clothing.

Skill practice 12
Assessment event 8 (practical)
Manual metal arc welding - fillet weld

IF IN DOUBT ASK YOUR TEACHER

Suggested time Skill practice: 1 hour 45 minutes
Assessment: 15 minutes

Objective To deposit a fillet weld to the requirements given below.

Position Flat.

Procedure Demonstrated by the teacher.

Method

1. Wire brush fusion faces to remove surface rust and mill scale.
2. Tack both ends of the plates, ensuring a close fit.
3. Complete approximately 50 mm of the weld and examine the weld profile.
4. Complete the weld and present to the teacher for inspection.
5. Break the weld and reposition for further practice.
6. Evaluate the weld exercise and complete the procedure sheet.
7. For assessment, repeat the fillet weld to the requirements given below.

Requirements

- Correct alignment and assembly with angular distortion limited to 0°-5°
- Smooth regular weld profile with weld size 6 +2 -2 mm
- Undercut restricted to 1 mm depth for the length of welds
- A maximum of two significant surface defects per weld length with an accumulative defect area not exceeding the square of the plate thickness

Material unit 2 pieces low carbon steel 50 x 10 x 225 mm

Unit required 2

Economy Consumables are expensive. Use electrodes down to a stub length of 50 mm maximum.

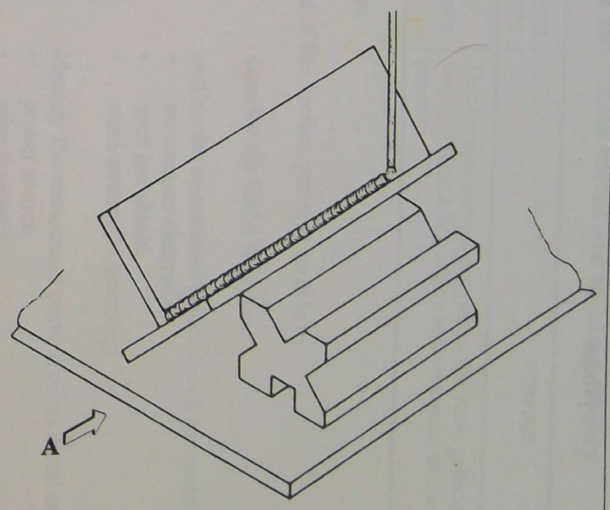

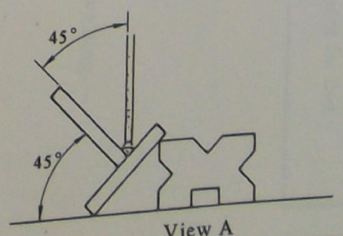

View A

Skill practice 12
Assessment event 8 (practical)
Manual metal arc welding - fillet weld

IF IN DOUBT ASK YOUR TEACHER

Suggested time Skill practice: 1 hour 45 minutes
Assessment: 15 minutes

Objective To deposit a fillet weld to the requirements given below.

Position Flat.

Procedure Demonstrated by the teacher.

Method

1. Wire brush fusion faces to remove surface rust and mill scale.
2. Tack both ends of the plates, ensuring a close fit.
3. Complete approximately 50 mm of the weld and examine the weld profile.
4. Complete the weld and present to the teacher for inspection.
5. Break the weld and reposition for further practice.
6. Evaluate the weld exercise and complete the procedure sheet.
7. For assessment, repeat the fillet weld to the requirements given below.

Requirements

- Correct alignment and assembly with angular distortion limited to 0°-5°
- Smooth regular weld profile with weld size 6 +2 -2 mm
- Undercut restricted to 1 mm depth for the length of welds
- A maximum of two significant surface defects per weld length with an accumulative defect area not exceeding the square of the plate thickness

Material unit 2 pieces low carbon steel 50 x 10 x 225 mm

Unit required 2

Economy Consumables are expensive. Use electrodes down to a stub length of 50 mm maximum.

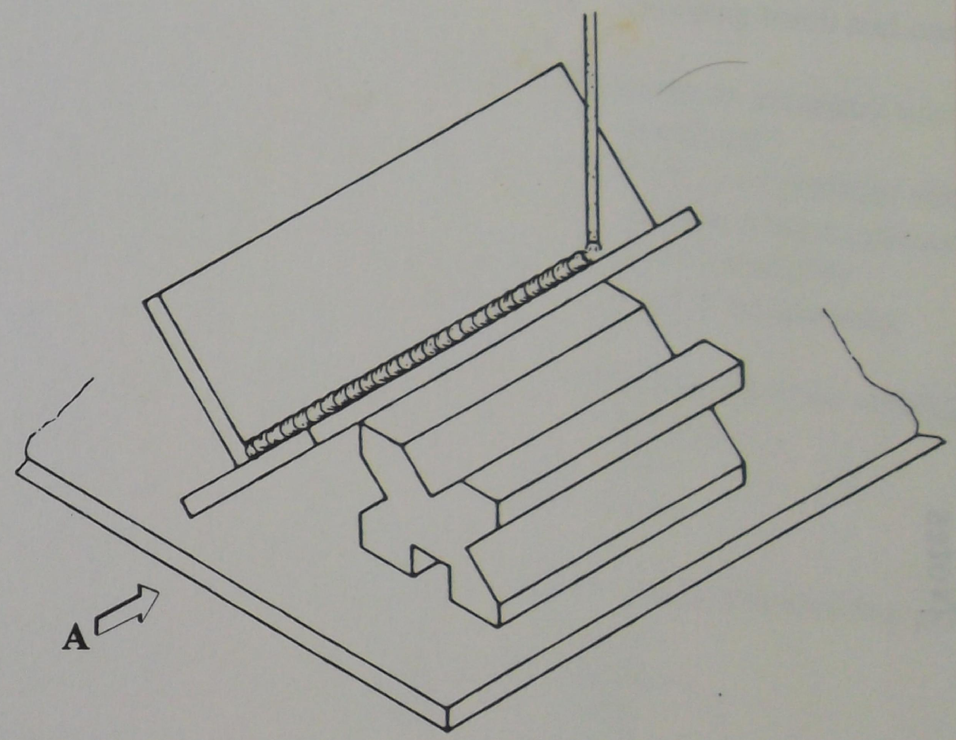

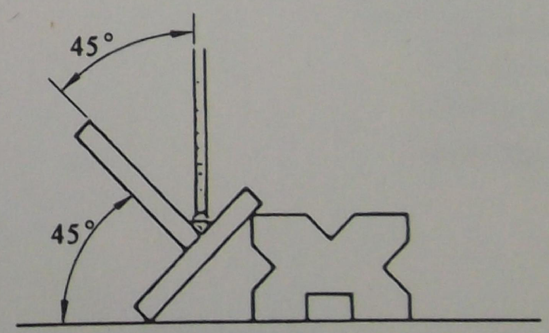

View A

Notes

Section 18: Gas metal arc welding theory

SUGGESTED DURATION	PURPOSE
1 hour 30 minutes	This section introduces you to the basic principles of gas metal arc welding (GMAW), safety requirements, and equipment for this process.

Objectives

At the end of this section you will be able to:

- ☐ describe the GMAW process
- ☐ outline the operational principles of gas metal arc welding
  - continuous electrode
  - inert gas shield
  - semi-automatic operation
- ☐ identify the component parts of a gas metal arc welding plant
  - power source
  - wire feed unit
  - welding torch and conduit
- ☐ list common industrial uses for GMAW
  - structural
  - boiler and pressure vessels
  - earth moving equipment
  - sheet metal uses
  - general engineering
- ☐ list the hazards of arc welding processes
  - electrical
  - heat
  - fumes
- ☐ list the protective clothing available for GMAW operators
  - eyes
  - body
  - feet
- ☐ describe how welding fumes can be removed or reduced from the breathing zone
  - natural ventilation
  - exhaust systems
  - respirators.

Gas metal arc welding (GMAW) process

Gas metal arc welding is a semi-automatic welding process which feeds a continuous wire electrode, through a torch, to the work. A shielding gas is given out around the wire and the weld pool to stop contamination from the atmosphere. Electric power is transferred to the wire at the contact tip. Machine settings are important to make sure that proper welding conditions are maintained for the job.

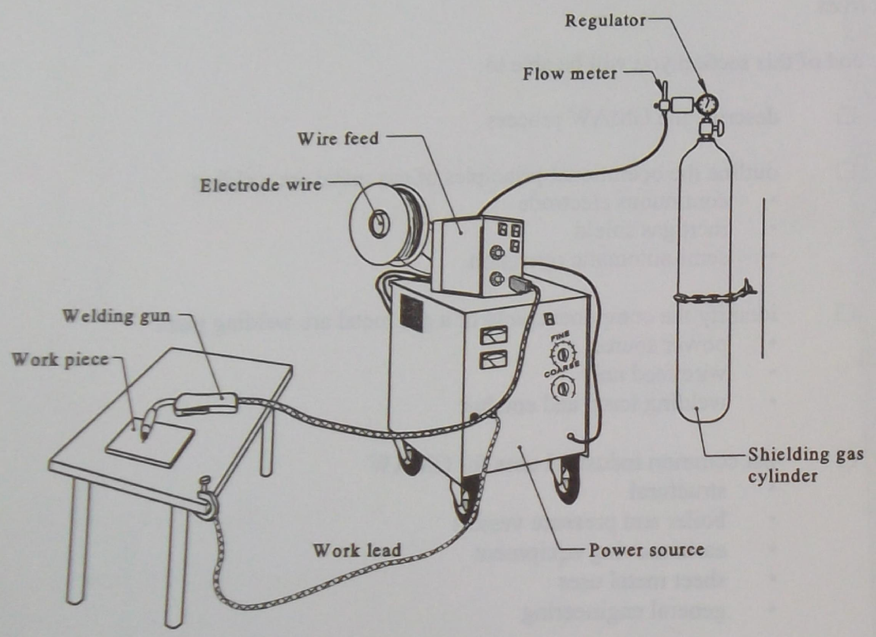

GMAW plant

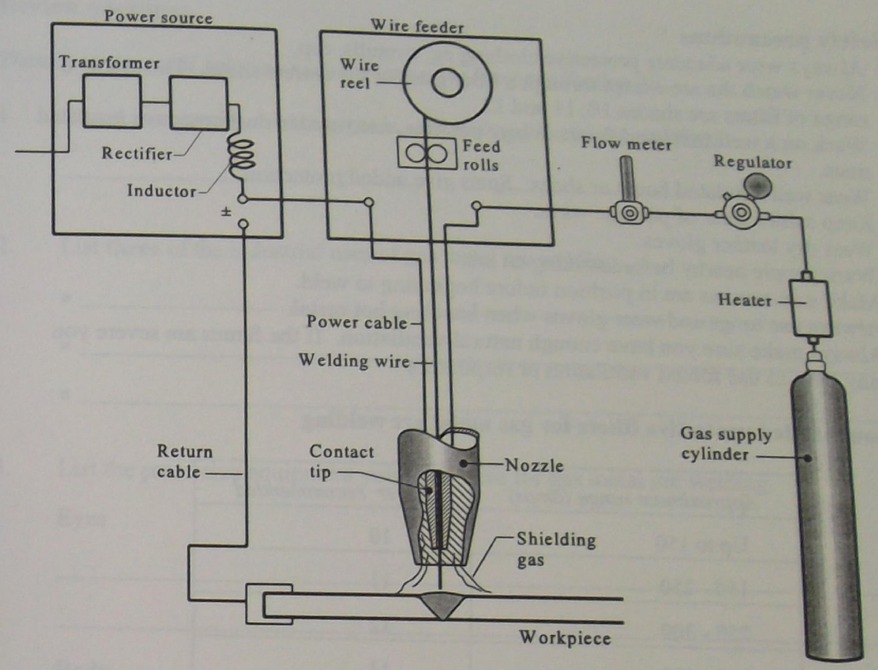

Gas metal arc welding process

Electrode wires range from 0.6 mm diameter to 1.6 mm and are supplied on spools.

Shielding gases are selected to suit the job. They are usually argon/CO_2 mixtures for welding steel.

Uses

Gas metal arc welding is used widely in industry. You can make variations for different jobs by selecting different gases, consumable wires, machine types and settings.

GMAW is used in the following industries.

- Structural
- Boilers and pressure vessels
- Earth moving equipment
- Light fabrication (sheet metal)
- General engineering

Safety precautions

- Always wear adequate protective clothing eg. overalls, cap.
- Never watch the arc except through a filter glass of the correct shade. The usual range of filters are shades 10, 11 and 12.
- Work on a well-insulated floor. Where possible, use wooden duckboards or insulated mats.
- Wear well-insulated boots or shoes. Spats give added protection.
- Keep cables clear of passage ways.
- Wear dry leather gloves.
- Warn people nearby before striking an arc.
- Make sure screens are in position before beginning to weld.
- Always use tongs and wear gloves when handling hot metal.
- Always make sure you have enough natural ventilation. If the fumes are severe you may have to use forced ventilation or respirators.

Recommended protective filters for gas metal arc welding

Approximate range (amps)	*Filter recommended*
Up to 150	10
150 - 250	11
250 - 300	12
300 - 400	13
Over 400	14

Your helmet and filter should meet relevant code requirements.

4. Is more versatile.

Review questions

These questions will help you revise what you've learnt in Section 18.

1. Give a reason why shielding gas is used with gas metal arc welding.

   _____

2. List **three** of the industrial uses of gas metal arc welding.

   - _____
   - _____
   - _____

3. List the protective equipment you must have for gas metal arc welding.

   Eyes

   _____

   _____

   Body

   _____

   _____

   Feet

   _____

   _____

4. List **three** ways of protecting yourself from fumes when gas metal arc welding.

   - _____
   - _____
   - _____

5. State the name of the part of the welding torch where the welding current is transferred to the wire.

   _____

Notes

4. Is more versatile.

Section 19: Gas metal arc welding - beads on plate

SUGGESTED DURATION	PREAMBLE
1 hour	This section enables you to safey deposit weld beads using the gas metal arc welding process.

Objectives

At the end of this section you will be able to:

- ☐ operate a gas metal arc welding plant
- ☐ deposit weld beads on low carbon steel plate to the following requirements
  - bead height 3 +2 -1mm
  - smooth regular weld profile
- ☐ record the weld procedure
- ☐ follow Occupational Health & Safety workshop procedures.

Safety

- Follow Occupational Health & Safety workshop procedures.
- Turn off your welding machine when you complete your work.
- Keep cables clear of passage ways.
- Always use tongs and wear gloves when handling hot metal.
- Cool your hot work, or attach a sign telling others it is hot.

Skill practice 13

Gas metal arc welding - beads on plate

IF IN DOUBT ASK YOUR TEACHER

Objective To deposit a bead weld on low carbon steel plate using the gas metal arc welding process to the requirements given below.

Position Flat.

Procedure Demonstrated by the teacher.

Method

1. Trial welding conditions on scrap material, to establish the weld procedure.
2. Deposit the weld as shown.
3. Clean up the bead weld and submit your work for inspection.
4. Turn the plate and repeat the exercise.
5. Evaluate the weld exercise and complete the procedure sheet.
6. Submit your work for evaluation.

Requirements

- Smooth regular weld profile free from splatter
- Bead height of 3 +2 -1 mm

Material unit 1 piece 100 x 12 x 225 mm low carbon steel

Unit required 1

Economy Use scrap material for setting equipment, and opposite side of the plate for further practice.

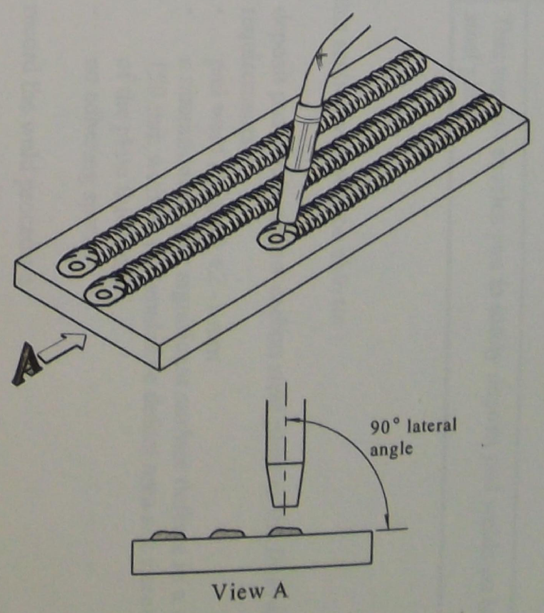

View A

Skill practice 13

Gas metal arc welding - beads on plate

IF IN DOUBT ASK YOUR TEACHER

Objective To deposit a bead weld on low carbon steel plate using the gas metal arc welding process to the requirements given below.

Position Flat.

Procedure Demonstrated by the teacher.

Method

1. Trial welding conditions on scrap material, to establish the weld procedure.
2. Deposit the weld as shown.
3. Clean up the bead weld and submit your work for inspection.
4. Turn the plate and repeat the exercise.
5. Evaluate the weld exercise and complete the procedure sheet.
6. Submit your work for evaluation.

Requirements

- Smooth regular weld profile free from splatter
- Bead height of 3 +2 -1 mm

Material unit 1 piece 100 x 12 x 225 mm low carbon steel

Unit required 1

Economy Use scrap material for setting equipment, and opposite side of the plate for further practice.

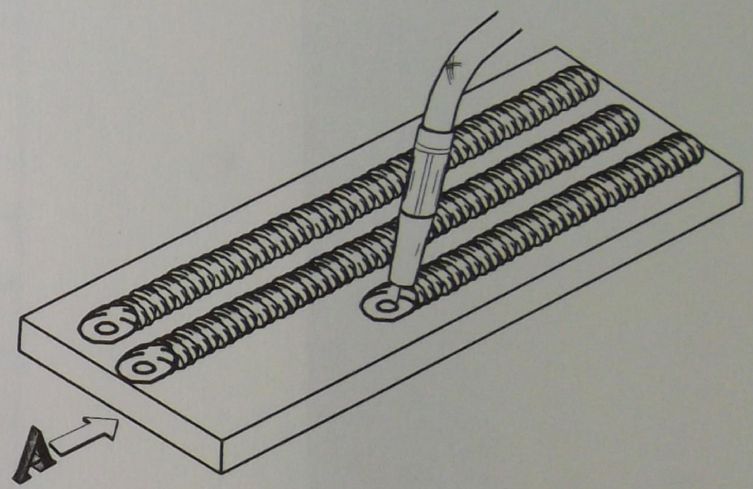

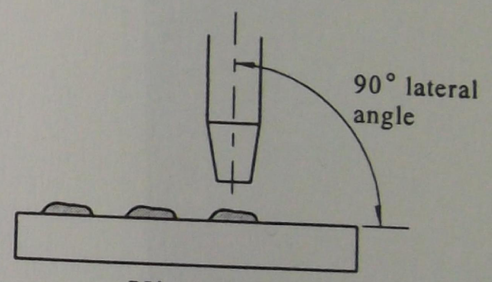

View A

Notes

4. Is more versatile

Section 20: Gas metal arc welding - pad weld

SUGGESTED DURATION	PREAMBLE
1 hour 30 minutes	This section enables you to safely deposit pad welds on low carbon steel plate.

Objectives

At the end of this section you will be able to:

- ☐ deposit pad welds on low carbon steel plate to the following requirements
  - pad weld height 3 +2 -1 mm
  - a maximum of four significant surface defects in a unit area of 40 x 150 mm with an accumulative defect area not exceeding the square of the plate thickness
  - no adhering spatter
- ☐ record the weld procedure
- ☐ follow Occupational Health & Safety workshop procedures.

Safety

- Follow Occupational Health & Safety workshop procedures.
- Wear safety glasses in the welding workshop.
- Wear suitable protective clothing.
- Use tongs to handle hot work.
- Warn people nearby before striking an arc.
- Make sure screens are in position before beginning to weld.

Procedure sheet
Gas metal arc welding - pad weld

Sketch		
Electric output data Amps Volts open circuit Volts arc	**Consumables data** Wire type Wire diameter Gas type Flow rate	
Electrode data Electrical stick out Wire feed rate Torch angles Lead Lateral	**Material data** Type Thickness **Weld time** Start Finish Units completed	
Remarks	**Complies**	**Does not comply**
Spatter		
Surface finish		
Surface defects		
Pad weld height		
Name	**Exercise Number**	

Skill practice 14

Gas metal arc welding - pad weld

IF IN DOUBT ASK YOUR TEACHER

Objective To deposit a pad weld on low carbon steel plate using the gas metal arc welding process to the requirements given below.

Position Flat.

Procedure Demonstrated by the teacher.

Method

1. Trial welding conditions on scrap material, to establish the weld procedure.
2. Mark a rectangular outline of the required bead weld on the plate.
3. Deposit the pad shape as shown.
4. Clean the weld and submit your work for inspection.
5. Turn the plate and repeat the exercise.
6. Evaluate the weld exercise and complete the procedure sheet.
7. Submit your work for evaluation.

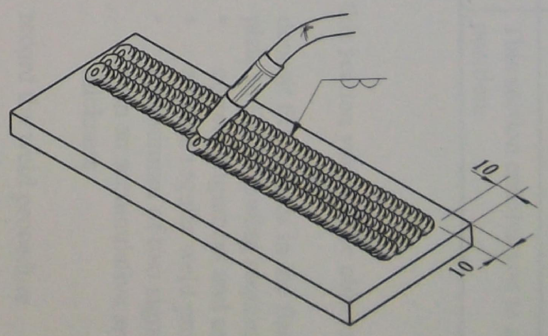

Requirements

- Smooth regular weld profile free from splatter
- Pad height of 3 +2 -1 mm
- A maximum of four significant surface defects per unit area of 40 x 150 mm with an accumulative defect area not exceeding the square of the plate thickness

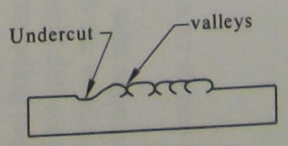

Common faults

Material unit 1 piece 100 x 12 x 225 mm low carbon steel

Unit required 1

Economy Use scrap material for setting equipment, and opposite side of plate for further practice.

4. Is more versatile

Skill practice 14

Gas metal arc welding - pad weld

IF IN DOUBT ASK YOUR TEACHER

Objective To deposit a pad weld on low carbon steel plate using the gas metal arc welding process to the requirements given below.

Position Flat.

Procedure Demonstrated by the teacher.

Method

1. Trial welding conditions on scrap material, to establish the weld procedure.
2. Mark a rectangular outline of the required bead weld on the plate.
3. Deposit the pad shape as shown.
4. Clean the weld and submit your work for inspection.
5. Turn the plate and repeat the exercise.
6. Evaluate the weld exercise and complete the procedure sheet.
7. Submit your work for evaluation.

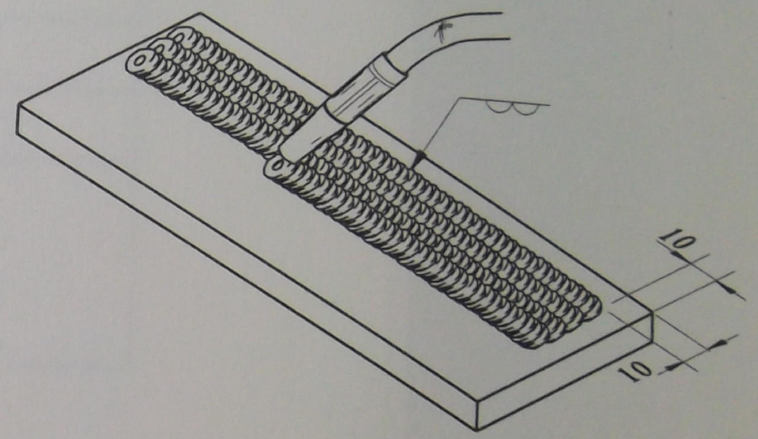

Requirements

- Smooth regular weld profile free from splatter
- Pad height of 3 +2 -1 mm
- A maximum of four significant surface defects per unit area of 40 x 150 mm with an accumulative defect area not exceeding the square of the plate thickness

Material unit 1 piece 100 x 12 x 225 mm low carbon steel

Unit required 1

Economy Use scrap material for setting equipment, and opposite side of plate for further practice.

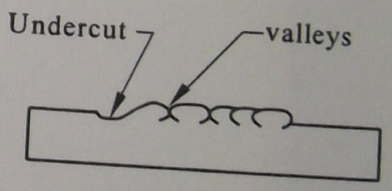

Common faults

Notes

4. Is more versatile

Section 21: Gas metal arc welding - fillet weld

SUGGESTED DURATION	PREAMBLE
1 hour 45 minutes	This section enables you to safely deposit fillet welds in the flat position.

Objectives

At the end of this section you will be able to:

- ☐ deposit fillet welds in the flat position on 10 mm thick low carbon steel plate to the following requirements
  - correct alignment and assembly with angular distortion 0°-5°mm
  - smooth regular weld profile with the weld size 6 +2 -1 mm
  - a maximum of two significant weld defects per 250 mm weld length with an accumulative area not exceeding the square of the plate thickness
- ☐ record the weld procedure
- ☐ follow Occupational Health & Safety workshop procedures.

Safety

- Follow Occupational Health & Safety workshop procedures.
- Wear the proper eye protection.
- Never watch the arc except through a filter glass of the correct shade. The usual range of filters are shades 10, 11 and 13.
- Work on a well-insulated floor. Where possible, use wooden duckboards or insulated mats.
- Wear suitable protective clothing.

Sketch		
Electric output data Amps Volts open circuit Volts arc		**Consumables data** Wire type Wire diameter Gas type Flow rate
Electrode data Electrical stick out Wire feed rate Torch angles Lead	Lateral	**Material data** Type Thickness **Weld time** Start Finish Units completed
Assessment	**Complies**	**Does not comply**
Bead height		
Surface finish		
Spatter		
Name	**Exercise Number**	

Skill practice 15
Assessment event 9 (practical)
Gas metal arc welding - fillet weld

IF IN DOUBT ASK YOUR TEACHER

Suggested time Skill practice: 1 hour 45 minutes
Assessment: 15 minutes

Objective To deposit a fillet weld to the requirements given below.

Position Flat.

Procedure Demonstrated by the teacher.

Method

1. Wire brush fusion faces to remove surface rust and mill scale.
2. Tack both ends of the plates, ensuring a close fit.
3. Complete approximately 50 mm of the weld and examine weld and profile.
4. Complete the weld and present to the teacher for inspection.
5. Break the weld and reposition for further practice.
6. Evaluate the weld exercise and compete the procedure sheet.
7. For assessment, repeat the fillet weld to the requirements given below.

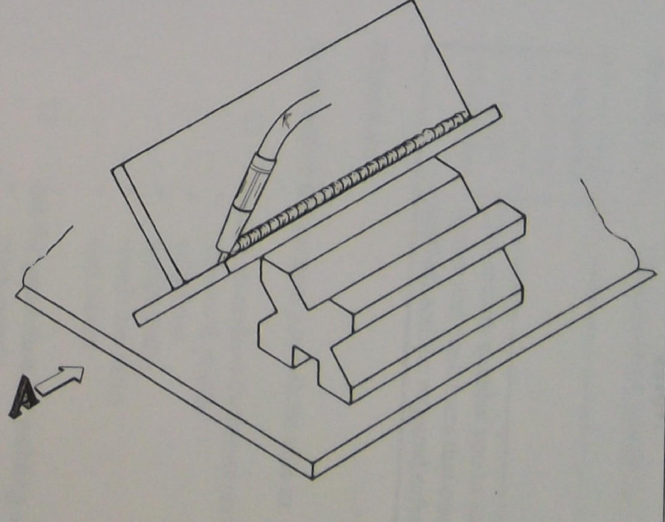

Requirements

- Correct alignment and assembly with angular distortion limited to 0°-5°
- Smooth regular weld profile with weld size equal 6 +2 -1 mm
- A maximum of two significant surface defects per weld length with an accumulative defect area not exceeding the square of the plate thickness

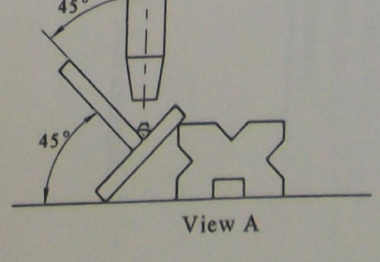

View A

Material unit 2 pieces low carbon steel 50 x 10 x 225 mm

Unit required 2

Economy Consumables are expensive, use shielding gas and electrode wire economically.

Skill practice 15
Assessment event 9 (practical)
Gas metal arc welding - fillet weld

IF IN DOUBT ASK YOUR TEACHER

Suggested time Skill practice: 1 hour 45 minutes
Assessment: 15 minutes

Objective To deposit a fillet weld to the requirements given below.

Position Flat.

Procedure Demonstrated by the teacher.

Method

1. Wire brush fusion faces to remove surface rust and mill scale.
2. Tack both ends of the plates, ensuring a close fit.
3. Complete approximately 50 mm of the weld and examine weld and profile.
4. Complete the weld and present to the teacher for inspection.
5. Break the weld and reposition for further practice.
6. Evaluate the weld exercise and compete the procedure sheet.
7. For assessment, repeat the fillet weld to the requirements given below.

Requirements

- Correct alignment and assembly with angular distortion limited to 0°-5°
- Smooth regular weld profile with weld size equal 6 +2 -1 mm
- A maximum of two significant surface defects per weld length with an accumulative defect area not exceeding the square of the plate thickness

Material unit 2 pieces low carbon steel 50 x 10 x 225 mm

Unit required 2

Economy Consumables are expensive, use shielding gas and electrode wire economically.

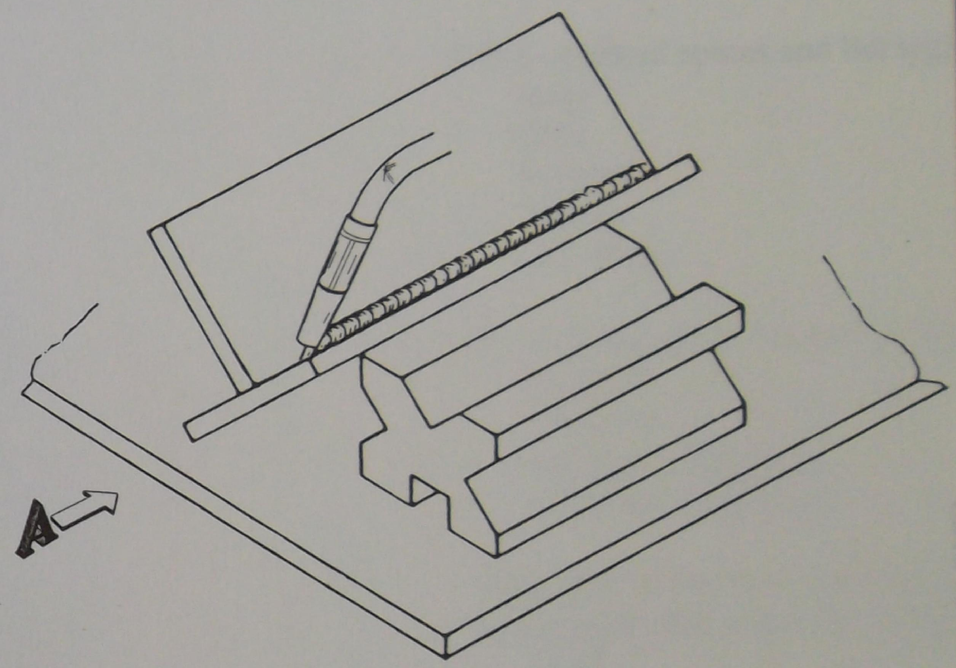

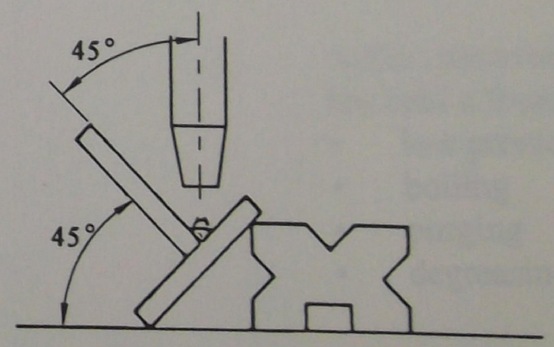

View A

Notes

Section 22: Hazardous locations and situations

SUGGESTED DURATION	PREAMBLE
2 hours 30 minutes	This section enables you to identify hazardous locations, confined spaces and containers that could cause an explosion or fire, if heat was applied, and the required safety procedures.

Objectives

At the end of this section you will be able to:

- ☐ define hazardous locations and list typical examples
  - chemical plants
  - refineries
  - textile mills
  - woodchip mills
  - and others
- ☐ list the procedure for welding or cutting in hazardous locations
  - work permit
  - fire prevention
- ☐ define confined spaces and list typical examples
  - tanks
  - ships
  - hoppers
  - vessels
  - and others
- ☐ list the safety precautions necessary when working in a confined space
  - assistant
  - ventilation
  - use of welding plant
  - electrical equipment
- ☐ list typical substances that make a container potentially dangerous if subjected to flame cutting, welding or heating
  - acid
  - petrochemicals
- ☐ outline the treatments and testing required to make a small container that has held a flammable substance, safe to heat, flame cut or weld
  - low pressure steam
  - boiling
  - purging
  - degreasing.

Hazardous locations and situations

Hazardous locations are areas where flammable or explosive substances are present or have been present. No welding or cutting is permitted in this area without written approval from the safety officer responsible for the location. When there's any doubt about the safety of a location, see your supervisor before starting work.

Areas classed as hazardous locations include the following.

- Alcohol distilleries
- Oil refineries
- Paint factories
- Explosives manufacturers
- Coal crushers
- Flour mills
- Plastics manufacturers
- Saw mills
- Wheat silos
- Clothing factories
- Paper mills

This list is only a guide and by no means complete.

Work processes which generate heat and can be dangerous in these locations include:

- flame heating
- oxy cutting
- gouging
- arc welding
- grinding.

Normal procedures for welding or cutting in hazardous locations

Before work can begin in any of these areas, the safety officer responsible must be informed of what you plan to do. The officer is then required to inspect the site thoroughly and make any special safety recommendations. The safety officer must issue a work permit before any work can begin. A typical work permit lists all the specific safety requirements and must be signed by the Responsible Officer.

Sample cutting and welding work permit

WORK PERMIT
FOR ARC OR FLAME CUTTING, FLAME HEATING AND ARC OR GAS WELDING OPERATIONS

Reference ..... *Date* .....

Period of Issue: From ..... *am/pm To* ..... *am/pm*

Premises/Ship .....

Department ..... *Floor* ..... *Location* .....

Nature of hazard .....

Precautions to be taken .....

.....

.....

Welder .....

All necessary precautions have been taken to avoid any possible fire or explosion hazard and permission is given for arc/or flame cutting, flame heating and arc or gas welding operations to be carried out in conformity with the above instructions.

Signed ..... *Welder* ..... *Responsible Officer*

Note: The work permit is valid only for the location and period indicated and is to be returned to the Responsible Officer on completion of the work.

Fire prevention

The Responsible Officer will tell those who are cutting, heating or welding to watch out for fire and where to contact the nearest fire brigade. The correct type and number of fire extinguishers must always be available for immediate use in your work area. After cutting, heating and welding the Responsible Officer must arrange for a watch to be kept for at least 1 hour.

Confined working areas

A confined working area is a location with restricted ventilation and/or access. Some examples are given below.

- Tanks and containers (road and rail tankers)
- Bins and silos (quarries, grain handlers, mines)
- Ship hull compartments
- Ducts and chutes
- Pipelines (large diameters)

Before you begin any work in these areas, check with your supervisor.

Working in confined areas

Working in confined areas requires a number of safety precautions.

- Ventilation by forced draught, using fans and/or air ducts.
- An assistant outside the location to observe the welders at all times - the assistant will operate the controls of the gas cylinders or welding machines and help in the event of an emergency.
- Rescue apparatus harness available so the attendant can assist without getting into danger.
- Gas cylinders and welding machines outside the location in a well ventilated position.
- Blowpipes lit outside, whenever practicable and be removed from the location when not in use.
- Electrical hand tools and lighting (32 volt maximum).

Dangerous containers

Containers are dangerous to work on especially if they contain flammable substances. They can be just as dangerous when empty, if gas or other residues remain. Even very small amounts of some residues are dangerous and they may collect in seams which makes them difficult to remove. Some examples of dangerous containers are given below.

- Vessels used for petroleum products or other types of explosive liquids that release a flammable gas.
- Vessels used for acid - hydrogen may be present.
- Vessels used for gum, resin, varnish, bitumen or similar products - these will release explosive gases when heated.
- Containers holding, or having held, a flammable or explosive solid - these may have particles of dust still in them which could cause an explosion.

Preparation of dangerous containers for welding or cutting operations

You should not rely on sight or smell to decide whether a container is safe or not. A work permit must be obtained before work begins on the container. If you are in doubt about any aspect, you should ask for help from a qualified chemist.

Cleaning and purging procedures for small containers

Steaming

Fill the container with steam under low pressure and drain out the steam and condensed water at the lowest point. Steam for a least half an hour after the container is hot, and be sure the flammable substance is completely removed.

Boiling

Remove the caps from the container and immerse it in boiling water. You may use degreasing agents but take care not to use an agent that will cause the container to corrode. The container should be boiled for at least half an hour. Be sure the flammable substance has been completely removed.

Other treatments

Besides steaming or boiling of small containers, other methods include filling the container with water to just below the repair area to reduce the incidence of gas build up or ignition.

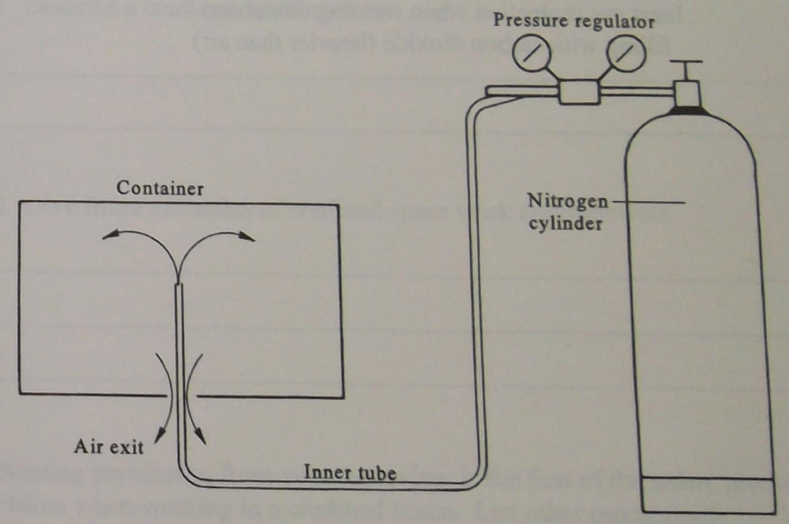

Before welding or cutting, partially fill the container with water, vent to the atmosphere and ask the welding supervisor to inspect it and confirm that it is safe to work on.

You can also supplement the process by filling the container with inert gas such as argon, carbon dioxide or nitrogen which will act in the same way as water.

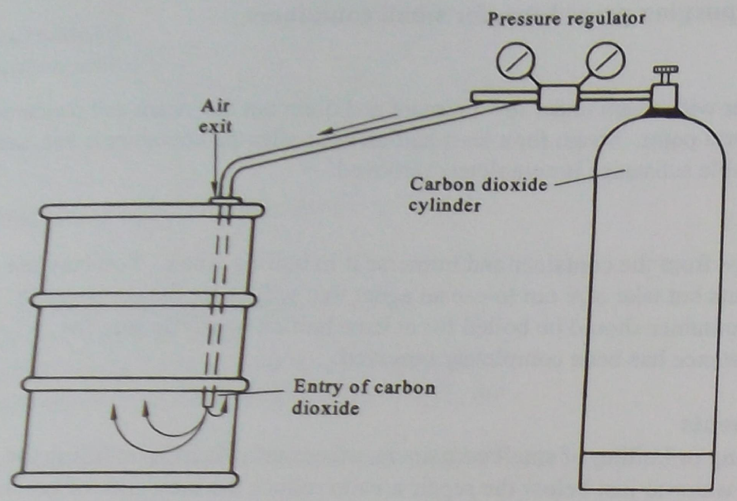

Inert gas protection when welding containers - filling with carbon dioxide (heavier than air)

Review questions

These questions will help you revise what you've learnt in Section 22.

1. List **three** of the locations that are classed as hazardous.

   - _____
   - _____
   - _____

2. What must you do first before beginning work in a hazardous location?

   _____

3. (a) Describe a confined working space.

   _____

   _____

   (b) Give **three** examples of confined space work environments.

   - _____
   - _____
   - _____

4. Obtaining permission from your supervisor is the first of the safety precautions to be taken when working in a confined space. List other precautions.

   _____

   _____

   _____

   _____