Power sources

The power sources for gas tungsten arc welding provide either an alternating current (AC) or a direct current (DC) or a combination of both. A high frequency HF unit can be built into the power source or obtained as an add-on unit.

- ACHF transformers
- DC generators
- AC/DC HF transformer rectifiers
- inverters.

Gas tungsten arc welding power sources are fitted with high frequency (HF) so the arc can self start. **Self start** or **non-touch** start means the arc can be initiated without the electrode having to make contact with the workpiece. There is more information on HF later in this section.

ACHF transformers

ACHF (alternating current high frequency) transformers produce a safe and adjustable alternating current for welding. This type of machine is generally used for gas tungsten arc welding aluminium, magnesium and their alloys.

DC generators

DC (direct current) generators are designed to generate an adjustable direct current for welding ferrous and non-ferrous metals. These machines are not often used today because transformer rectifiers and inverters are more efficient and popular. Generators can be fitted with portable HF units for non-touch starting.

AC/DC HF transformer rectifiers

AC/DC HF (alternating current/direct current high frequency) transformer rectifiers are the most popular type of power source. They supply either AC or DC welding current with HF. This power source is suitable for welding all metals, both ferrous and non-ferrous.

Inverters

Inverters are a newer type of power source that is lighter, more portable and multi-functional. Inverters can be used for different types of welding processes. They are designed to produce DC current. More specialised and expensive types provide AC current.

Polarity/current

When using direct current the gas tungsten arc welding process you need to select the correct polarity for the material to be welded. Choosing a polarity is an important part of the welding operation because it affects the operating characteristics of the arc, heat input and level of weld penetration.

- DC (-) negative
- DC (+) positive
- AC-HF.

DC (-) negative

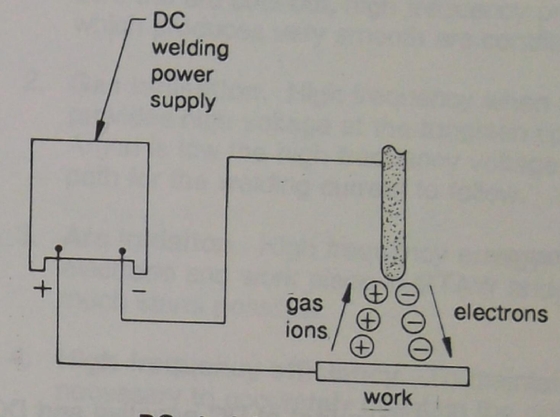

DC straight polarity (electrode negative)

With the DC negative polarity the electrode (torch) is connected to the negative terminal of the power source. The negative electrons flow from the electrode to concentrate about two thirds of the heat energy into the positive workpiece and produce a deep penetrating weld. DC polarity is used for welding all types of materials except aluminium and magnesium alloys.

DC (+) positive

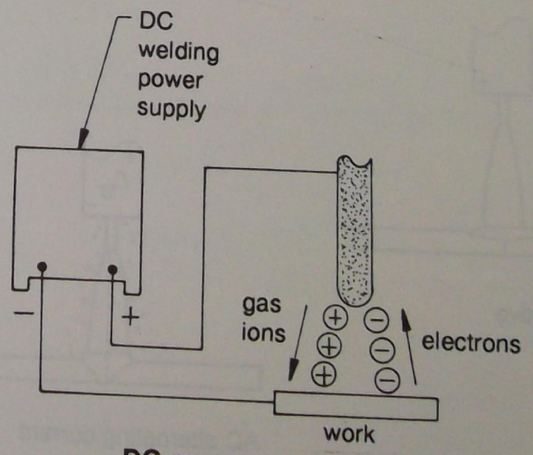

DC reverse polarity (electrode positive)

When using DC+ polarity the electrode (torch) is connected to the positive terminal and the workpiece to the negative terminal of the power source.

The electrons flow from the workpiece to concentrate about two thirds of the heat energy into the electrode and the remainder into the workpiece. This causes electrode overheating and much shallower weld penetration and so DC electrode positive is seldom used. It requires larger size electrodes on lower currents to prevent the electrode melting into the weld pool.

AC-HF

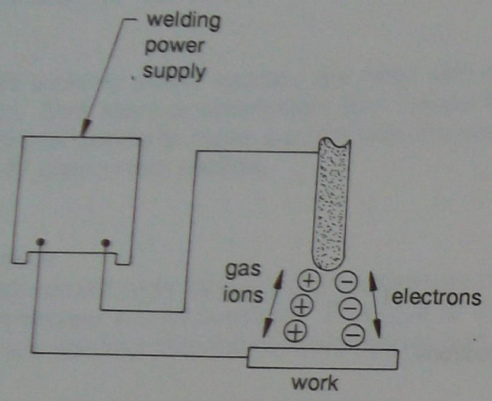

AC-HF gives a weld penetration characteristic between that of DC negative and DC positive. Its electrical cleaning action makes it ideally suited to welding aluminium and magnesium alloys.

Examples of arc and weld penetration characteristics

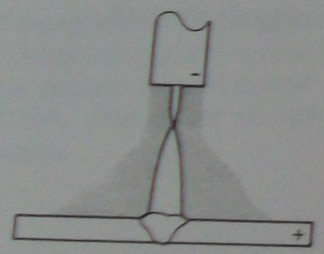

DC (-) negative

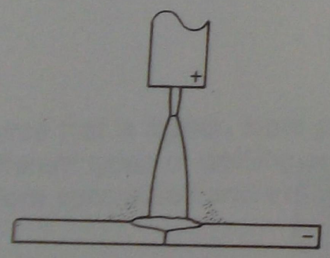

DC (+) positive

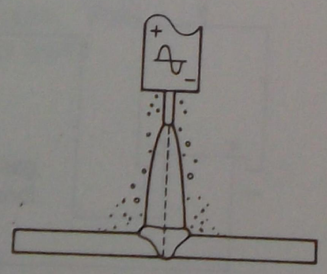

AC alternating current

High frequency systems

The term high frequency, as applied to welding processes and power sources, usually refers to electrical pulses in the frequency range of 50,000, to 3,000,000 hertz (cycles) per second at very low amperages. When high frequency is switched on a superimposed secondary voltage is passed through the welding circuit.

High frequency is used to provide:

1. **Arc stabilisation with AC current.** When an AC sine wave passes through zero the arc cuts out, high frequency provides stable re-initiation of the arc which produces very smooth arc conditions.

2. **Gas ionisation.** High frequency when used in conjunction with GTAW provides high voltage at the tungsten tip. Since the ionisation potential of Argon is low the high frequency voltage does create an improved ionised gas path for the welding current to follow.

3. **Arc initiation.** High frequency energy, by ionising a gas path between the electrode and work piece in GTAW bridges the physical distance making non touch starts possible.

4. **High frequency efficiency.** To maintain high frequency efficiency it is necessary to accurately maintain the contact points in the high frequency unit. Qualified electricitians are responsible for the service of the points unit.

nt the electrode melting into the weld pool.

Tungsten electrodes

Tungsten (chemical symbol W) is a very hard, silver-grey metal which has the highest melting point (3410°C) of all the metals and stays hard even when red-hot.

Electrodes for gas tungsten arc welding are different from those used for manual metal arc welding. They are not flux coated, do not melt in the arc or leave a slag cover over the finished weld.

Gas tungsten arc electrodes will melt if they are the wrong type or size, if excessive current is used or if the argon runs out or is turned off, if any of these situations occur; thin particles of tungsten can be transferred across the arc into the weld pool.

There are four main types of tungsten electrodes used with the gas tungsten arc process. The choice depends on the metal being welded and the current/polarity used.

The four tungsten electrodes and the recommended current/polarity for each are:
- pure tungsten (ACHF or DC(-))
- thoriated tungsten (DC(-))
- zirconiated tungsten (ACHF)
- ceriated tungsten (ACHF) and DC(-)

Pure tungsten
Pure tungsten electrodes were the first used for gas tungsten arc welding but are rarely used.

Improvements have been made to tungsten electrodes with the addition of alloying elements such as thorium, zirconium and cerium.

Thoriated tungsten
Thoriated tungsten electrodes contain a small percentage (up to 2%) of thorium oxide which improves the qualities of the electrode. These electrodes are used with direct current on negative polarity (DC-).

Zirconiated tungsten
Zirconiated alloyed tungsten electrodes are useful because they form a balled tip and resists oxides. These electrodes are used with alternating current high frequency (ACHF).

Ceriated tungsten
Ceriated electrodes contain small percentages of cerium which combine the features of both the thoriated and zirconiated type electrodes. These electrodes can be used on both ACHF and DC negative.

Electrode preparation

It's most important that you prepare electrodes properly before use. The size and shape of the tip depends on the amount of current that has to pass through the electrode.

When using low currents on thin metals' grind the electrode to a point. The length of the point can be about two to three times the diameter (thickness) of the electrode. This is for electrodes up to 3.2mm diameter.

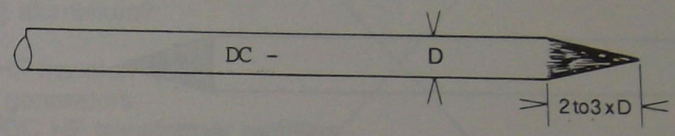

When using higher currents taper the electrode to about twice the diameter of the electrode and leave the tip flat.

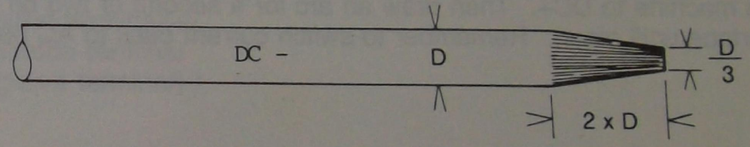

Ball zirconiated electrodes by grinding a shorter taper; about a 45° angle with a flat tip about half the diameter as shown below.

Before beginning to weld, draw the arc between the electrode and a striker plate to allow the tip to ball. Copper is an excellent striker plate.

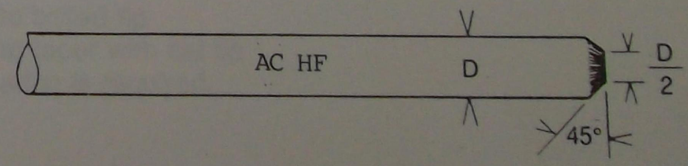

Grind the electrode with the grind marks running lengthways on the tip as shown in the previous examples. If you grind the electrode round the tip (as shown below), small particles of tungsten may break from the electrode and be thrown across the arc to contaminate the weld metal. When low amperes are used the arc can wander by following the grind marks around the tip.

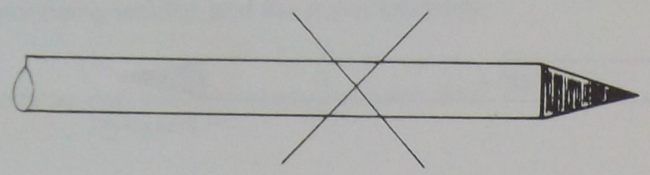

Note To clean a contaminated zirconiated electrode, when welding aluminium, first switch the machine to DC+. Then draw an arc for a second or two on a copper surface until clean. Remember to switch current back to AC before welding.

Review questions

These questions will help you revise what you've learnt in **Section 5**. The answers are on page 79. Ask your teacher for help with anything you don't understand.

Multiple choice questions

Choose the correct answer and write the letter **a**, **b**, **c** or **d** in the box.

1. Which of the machines listed below is not recommended for gas tungsten arc welding aluminium?

   a. ACHF transformers
   b. DC generators
   c. AC/DC HF transformer rectifiers
   d. none of the above. ☐

2. When using DC generators for gas tungsten arc welding the electrode (torch) lead is connected to the:

   a. work terminal
   b. positive terminal(+)
   c. electrode terminal
   d. negative terminal(-). ☐

3. Which electrode is recommended for use on ACHF?

   a. thoriated tungsten
   b. chromium tungsten
   c. zirconiated tungsten
   d. nickel tungsten. ☐

4. When welding with low amperes on dc - the electrode is:

   a. prepared to tapered point
   b. prepared to balled tip
   c. prepared to taper with flat tip
   d. no preparation is required. ☐

Short answer questions

5. About two thirds of the heat of direct current (DC) comes from which terminal?

   _____

6. When using the gas tungsten arc process on ACHF, the high frequency has some important functions. Name one of these functions:

   _____

7. List **three** different types of electrodes used for gas tungsten arc welding.

   - _____
   - _____
   - _____

8. When using ACHF, the positive (+) half cycle has an effect on aluminium. What is this effect?

9. With the aid of a sketch show the correct preparation for a zirconiated tungsten electrode.

10. List **two** advantages of using zirconiated electrodes:

    - _____
    - _____

Section 6 Gases and filler rods

Task To understand the different types of shielding gases and filler rods used for gas tungsten arc welding steel, stainless steel and aluminium materials.

This section covers learning outcome 4 of the National Module Descriptor.

Why So you will be able to choose the appropriate consumables for welding.

To pass At the end of the module you will do a competency test on this topic. This consists of a series of multiple choice and short answer questions.



Safety

- Make sure adequate ventilation is provided when welding in confined spaces.
- Always wear non-flammable clothing and footwear.

Shielding gases and their uses

The function of shielding gases in the gas tungsten arc welding process is to protect the tungsten electrode and molten weld pool from contamination from the surrounding air. Without a shielding gas there would be serious damage to the electrode and poor quality welds would be made.

Inert gases are generally used for this process. The shielding gases and gas mixtures most used are:

- argon (Ar)
- helium (He)
- argon/helium (Ar/He) gas mixture
- argon/helium/hydrogen* (Ar/He/H) gas mixture

* Hydrogen is not inert. It is classified as an active gas.

Argon
Argon is the most widely used GTA shielding gas in Australia. It's the least expensive because it's obtained from separating air during the oxygen and nitrogen distillation process. Argon produces a moderately hot arc and is suitable for welding all metals. It has the slowest welding speed of all the gases and gas mixtures but the best arc starting characteristic.

Helium
Helium is the most expensive inert gas used in Australia because it's imported from North America. Helium produces a hotter arc and deeper weld penetration than argon. It can be used on all metals.

Argon/helium mixtures
Argon and helium are mixed together in varying percentages to form a range of gases suitable for welding different materials. Either one can be the base gas. The greater the percentage of helium, the hotter the arc temperature. For example, three parts argon to one part helium produces a hot arc especially good for aluminium. Mixed in the opposite proportions, the arc is very hot with high welding speeds and rapid melting of the metal (without the need for pre-heat) and broad deep penetration. This mixture is an economic alternative to pure helium. It's used for improving weld speeds, penetration and the shape of the weld.

Argon/helium/hydrogen mixtures
The three-gas mixtures produce a hot stable arc for welding steels (low carbon and alloy), stainless steels, some copper alloys and nickel. They produce a very hot arc and better welding speeds than argon/helium mixtures. As the hydrogen content is more than 1%, these mixtures are no longer inert. The relatively small amount of hydrogen doesn't damage the parent material or tungsten electrode.

Cylinder colour code

There is an **Australian Standards** colour code for gas and gas mixture cylinders so they can be easily recognised. The colours for the cylinders used with the gas tungsten arc process are:

argon	peacock blue
helium	middle brown
argon/helium	peacock blue with middle brown shoulder
argon/helium/hydrogen	peacock blue with middle brown shoulder and red band.

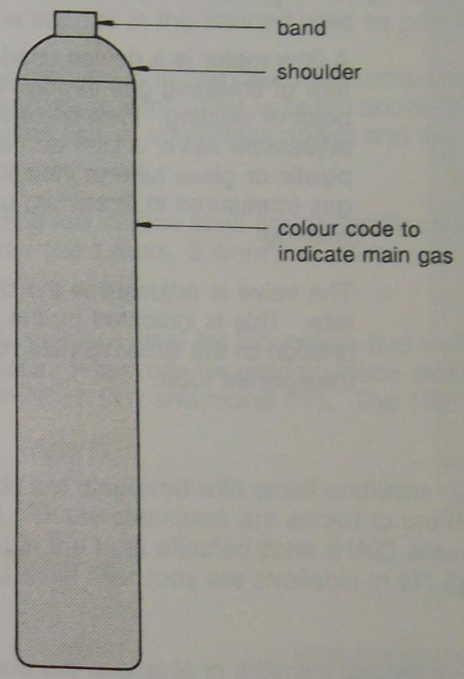

Regulators and flow-meters

Regulators

The main function of the regulator is to reduce the high pressure from the cylinder to a safe and usable operating pressure. Regulators used for gas tungsten arc welding are pre-set to a maximum output pressure of 200kPa.

They are colour coded, usually peacock blue, and have a right-hand threaded connection.

Flow-meters



A flow-meter is a device used to control the flow of shielding gas through the torch to the point of welding. Flow-meters have an adjustable valve, a float and a transparent plastic or glass tube to indicate the amount of gas (measured in litres/min) used during welding.

The valve is adjusted to the desired gas flow rate. This is indicated by the level of float in relation to the litres/minutes reading on the transparent tube.

Example of a regulator used for gas tungsten arc welding.



Filler rods

Good quality welds with the gas tungsten arc process depend on matching the type of filler rod to the parent metal and the size of the rod to the size of the weld. The composition of the filler rod should be as close as possible to the parent material.

Low carbon steels

The gas tungsten arc process is particularly suitable for the various types and alloys of low carbon steel. These are usually described as **semi-killed** which means the steel has been de-oxidised during manufacture but can still contain oxygen which may cause problems during welding. Gas bubbles can form in the weld puddle and be trapped in the finished weld as porosity.

The solution to this problem is to use filler wire containing de-oxidisers such as silicon (Si) and manganese (Mn). This is called double de-oxidised rod. A third de-oxidiser, aluminium (Al), is sometimes added and this known as triple de-oxidised rod.

Filler rods for welding low carbon steel are generally colour-coded and are available in diameter (∅) 1.6mm, 2.4mm and 3.2mm.

Stainless steel

The most common stainless steel for fabrication and welding are the austenitic stainless steel grades. Filler rods for welding these steels contain varying percentages of chromium (Cr) and nickel (Ni). The 18/8 Cr/Ni is one of the most popular.

Austenitic filler rods are stabilised with small additions of niobium (Nb) and Molybdenum (Mo). These stabilisers are added to prevent carbide precipitation (loss of chromium) in the heat affected zone (HAZ) area of the weld. Stabilised austenitic stainless steel filler rods are available in ∅1.6mm, 2.4mm and 3.2mm.

Aluminium

Aluminium filler rods are available in different grades and sizes for many uses. When welding aluminium, it's important to select the correct grade or series number filler rod to suit the composition of the parent material.

Pure aluminium is used for the welding exercises in this module. To weld this grade of material you will need a 1000 series (pure) aluminium filler rod.

1000 series, pure aluminium filler rods are available in ∅1.6mm, 2.4mm, 3.2mm and 4.8mm.

Review questions

These questions will help you revise that you've learnt in **Section 6**. The answer are on page 80. Talk to your teacher, if there's anything you don't understand.

Multiple choice questions

Choose the correct answer and write the letter **a**, **b**, **c** or **d** in the box.

1. The most common gas used for shielding with the gas tungsten arc welding process is:

   a. argon
   b. carbon dioxide
   c. acetylene
   d. oxygen

2. The cylinder colour for helium is?

   a. peacock blue
   b. black
   c. middle brown
   d. maroon

3. Which of the gases/gas mixtures in the list below is not an inert gas?

   a. helium
   b. hydrogen
   c. argon/helium
   d. argon

4. The function of the gas regulator is to:

   a. regulate the amperes to the torch
   b. lower the volts from the power source
   c. deliver gas to the torch
   d. feed water to the torch

5. Which type of filler rod would you choose to weld pure aluminium?

   a. de-oxidised low carbon steel
   b. de-oxidised copper
   c. stabilised stainless steel
   d. aluminium

Short answer questions

1. Shielding gases have an important function in gas tungsten arc welding. Briefly describe that function:

2. Briefly describe what is meant by the term inert:

3. Briefly describe the function of the flow-meter in the gas tungsten arc process:

4. Filler rods used for welding low carbon steel contain de-oxidisers to eliminate porosity from the weld metal. Name **two**:

   -
   -

5. Stainless steels can be stabilised to prevent carbide precipitation. Name **two** of the stabilisers that are used for this purpose:

   -
   -

Notes

Section 7 Corner fillet weld - stainless steel sheet - flat

Task

Deposit single run corner fillet welds on stainless steel sheet in the flat position.

This section covers part of learning outcome 5 of the National Module Descriptor.

Why

So you will be able to competently weld stainless steel sheet sections together in the flat position as required by industry.

To pass

You will be expected to complete a single run corner fillet weld on stainless steel sheet in the flat position to the requirements on the work sheet.



Safety

- Follow all the OH&S safety requirements.
- Protect your eyes and skin by wearing proper safety clothing.
- Use screens to protect others from arc rays.

PROCEDURE SHEET

Section 7 Corner fillet weld - stainless steel sheet flat		
Welding data:		
Machine brand	**Weld current data** Run:	
Type of current:	1 amps	3 amps
Type of electrode:	2 amps	4 amps
Electrode size: ∅	**Material data** Type:	Classification:
Electrode profile		
Type of shielding gas:	Thickness:	
Flow rate l/min:	Surface cleaning:	
Type of filler rod:	Pre heat temperature:	
Size of filler rod: ∅	Ceramic hood size:	
Assessment	**Complies**	**Doesn't comply**
Correct alignment, assembly and tacking		
Smooth regular contour		
Angular distortion		
Weld defects		
Name:		

Section 7 Corner fillet weld - stainless steel sheet - flat
(Formal assessment to pass)

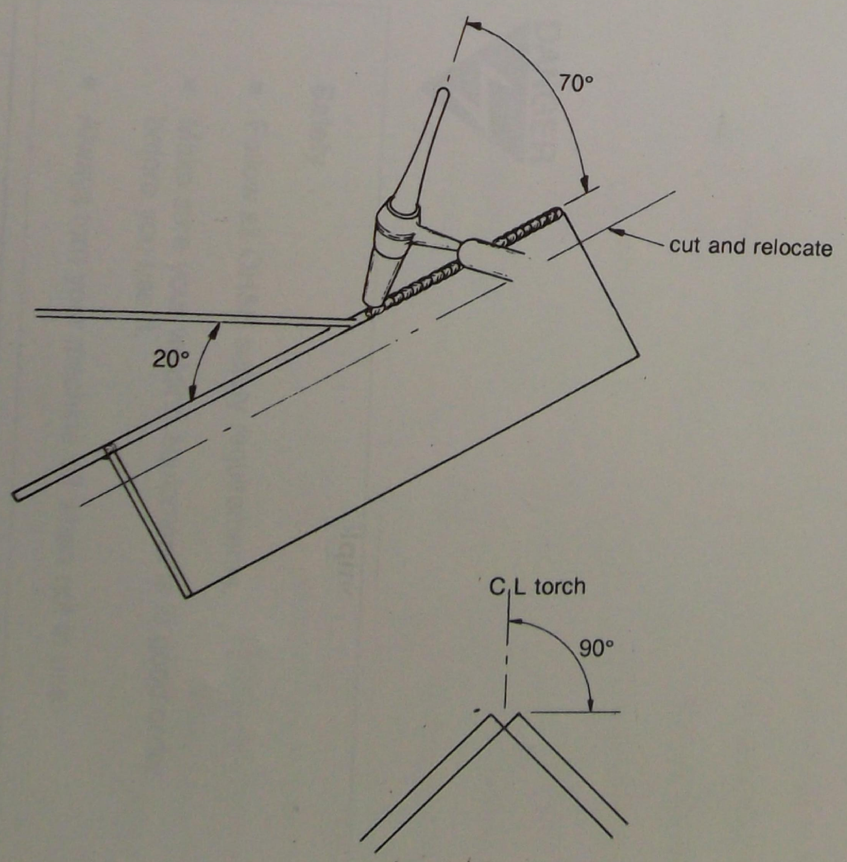

IF IN DOUBT ASK YOUR TEACHER

OBJECTIVE To deposit a single run corner fillet on 1 to 1.6mm stainless steel.

POSITION Flat

PROCEDURE Your teacher will demonstrate.

METHOD
1. Thoroughly clean weld surface and degrease if necessary.
2. Assemble and securely tack weld.
3. Dress tack welds.
4. Complete welding exercise and show your work to your teacher.
5. Repeat the exercise and show your completed job for assessment.
6. Complete your procedure sheet.

REQUIREMENTS
- correct alignment, assembly and tacking of the job
- smooth regular weld contour
- angular distortion 0° to 5°
- to have no more than 2 significant defects per 150mm of weld length with an accumulated defect area of less than 4 times the square of the material thickness.

MATERIAL 4 pieces 50 x 1 to 1.6 x 150mm stainless steel sheet

UNITS 2

ECONOMY Return unused material and filler rods to the store. Turn off the shielding gas when you're not using it.

Notes

Section 8 Fillet weld - stainless steel sheet - horizontal

Task To deposit single run fillet welds on stainless steel sheet in the horizontal position.

This section covers part of learning outcome 5 of the National Module Descriptor.

Why So you will able to competently weld stainless steel sheet in the flat position as required by industry.

To pass You will need to complete a single run fillet weld on stainless steel sheet in the horizontal position to the requirements on the work sheet.



Safety

- Follow all OH&S safety requirements.
- Make sure your welding equipment is in good order before you use it.
- Always turn your machine off when not in use.

PROCEDURE SHEET

Section 8 Fillet weld - stainless steel sheet - horizontal

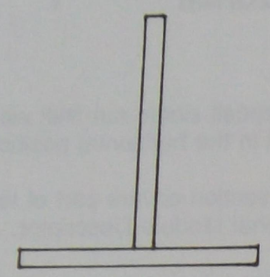

Welding data:

Machine brand	**Weld current data** Run:
Type of current:	1 amps 3 amps
Type of electrode:	2 amps 4 amps
Electrode size: Ø	**Material data** Type: Classification:
Electrode profile	
Type of shielding gas:	Thickness:
Flow rate l/min:	Surface cleaning:
Type of filler rod:	Pre heat temperature:
Size of filler rod: Ø	Ceramic hood size:

Assessment	Complies	Doesn't comply
Correct alignment, assembly and tacking		
Smooth regular contour		
Angular distortion		
Weld defects		

Name:

Section 8 Fillet weld - stainless steel sheet - horizontal
(Formal assessment to pass)

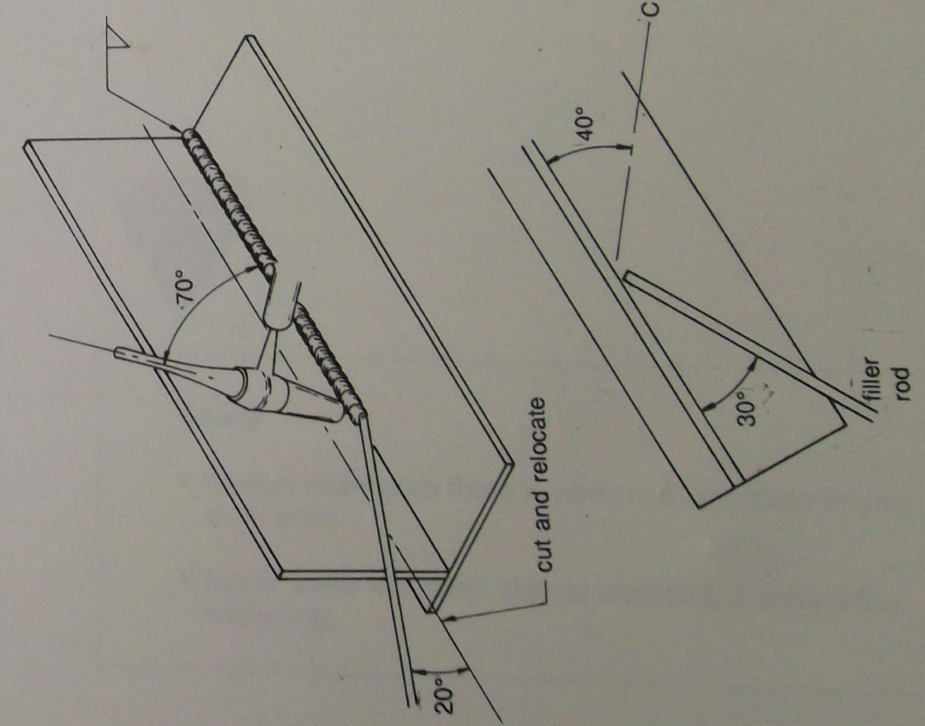

IF IN DOUBT ASK YOUR TEACHER

OBJECTIVE To deposit a single run fillet on 1 to 1.6mm stainless steel.

POSITION Horizontal

PROCEDURE Your teacher will demonstrate.

METHOD
1. Thoroughly clean weld surface and degrease if necessary.
2. Assemble and securely tack weld.
3. Dress tack welds.
4. Complete welding exercise and show your work to your teacher.
5. Repeat the exercise and show your completed job for assessment.
6. Complete your procedure sheet.

REQUIREMENTS
- correct alignment, assembly and tacking of the job
- smooth regular weld contour
- angular distortion 0° to 5°
- to have no more than 2 significant defects per 150mm of weld length with an accumulated defect area of less than 4 times the square of the material thickness.

MATERIAL 4 pieces 50 x 1 to 1.6 x 150mm stainless steel sheet

UNITS 2

ECONOMY Return unused material and filler rods to the store. Turn off the shielding gas when you're not using it.

otes

Section 9 Gas tungsten arc weld faults

Task To recognise gas tungsten arc welding faults.

This section covers learning outcomes 6 and 7 of the National Module Descriptor.

Why So you will able to identify problems and take appropriate corrective action.

To pass At the end of the module you will do a competency test on this topic. This consists of a series of multiple choice and short answer questions.



Safety

- Always make sure there is adequate ventilation in your work area.
- Never leave hot metal objects unattended around the workshop.

Gas tungsten arc welding faults

Despite your efforts to produce perfect welds, faults sometimes occur with all welding processes. Gas tungsten arc welding is no exception. Faults are caused by human error, equipment not working properly, using the wrong type of filler rod or the wrong welding technique or other things.

Faulty welds add expense to a job because it takes time to put them right. It's important for you to know the types of faults, the likely causes and how to correct them.

The most common gas tungsten arc welding faults are:

- undercut
- overroll
- porosity
- lack of fusion
- tungsten inclusion
- cracking.

You will find the possible causes for these faults and suggestions on how to correct them on the next two pages.

FAULT	POSSIBLE CAUSE	HOW TO CORRECT
Undercut 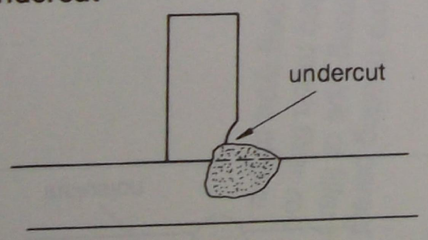	▪ Welding current too high ▪ Welding speed too fast ▪ Not adding enough filler rod	▪ Lower the current ▪ Use a slower welding speed ▪ Add more filler rod to the weld pool
Overroll 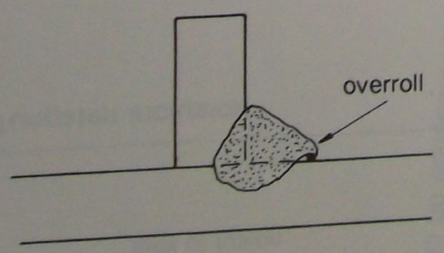	▪ Welding current too low ▪ Adding too much filler rod ▪ Using too large a size filler rod	▪ Increase the current ▪ Reduce the amount you add ▪ Use a smaller size filler rod
Porosity 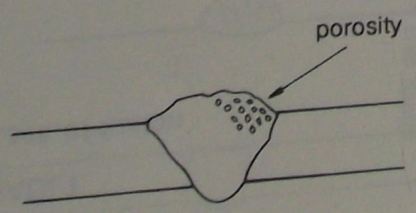	▪ Using too long an arc length ▪ Lack of shielding gas covering the weld ▪ Working in draughty area ▪ Gas nozzle bore too small (causes a lack of shielding around the arc) ▪ Welding over contaminated metal	▪ Shorten your arc ▪ Increase gas supply ▪ Protect the weld area by closing doors, windows or by screening ▪ Use a larger size nozzle ▪ Clean surfaces before welding

FAULT	POSSIBLE CAUSE	HOW TO CORRECT
Lack of fusion 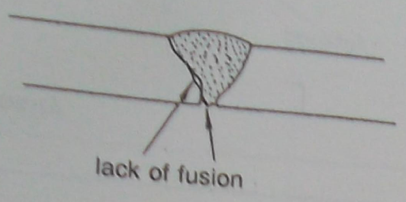 	▪ Welding current too low ▪ Using wrong welding technique ▪ Poorly prepared weld joint preparation ▪ Using incorrect size filler for the type of work ▪ Welding over badly contaminated surfaces	▪ Increase the current ▪ Adjust your technique to suit the type of work ▪ Adjust preparation ▪ Select the correct size for the thickness of metal and position it is to be welded in ▪ Clean surfaces before you weld them
Tungsten inclusion 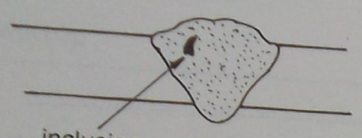 	▪ Current too high for the size of the electrode ▪ Poor electrode preparation ▪ Touching the workpiece with the electrode ▪ Welding with a badly contaminated electrode	▪ Lower the current to suit the size of the electrode ▪ Prepare the electrode to the dimensions shown in this module ▪ Adjust your operating technique ▪ Clean and regrind ready for use

Review questions

These questions will help you revise what you've learnt in **Section 9**. The answers are on page 81. Ask your teacher for more help if you need it.

Multiple choice questions

Choose the correct answer and write the letter **a**, **b**, **c** or **d** in the box.

1. Undercut is mostly likely caused by:

   a. welding over contaminated surfaces
   b. adding excessive amounts of filler rod
   c. using too large a gas nozzle
   d. using too high a welding current

2. Which of the following is a major cause of weld porosity?

   a. using too high a welding current
   b. welding in draughty conditions
   c. using too short an arc length
   d. none of the above

3. When gas tungsten arc welding, which of the following would correct lack of fusion?

   a. increasing welding current
   b. adding more filler rod
   c. increasing gas supply
   d. depositing larger size weld

4. Which of the following would have least influence on cracking of the weld metal?

   a. lack of pre-heating parent metal
   b. using wrong type of filler rod
   c. adding too much filler rod
   d. using wrong type of gas

5. Tungsten inclusions in a weld are caused by:

   a. the electrode touching the workpiece
   b. using too high a current for the size of electrode
   c. poor electrode preparations
   d. all of the above

6. Contamination of workpiece surfaces is likely to cause:

   a. undercut
   b. porosity
   c. overroll
   d. tungsten inclusion

7. Using too fast a welding speed will result in:

   a. undercut
   b. overroll
   c. porosity
   d. none of the above

Short answer questions

8. Below are four typical gas tungsten arc welding faults. Identify each one and label where indicated:

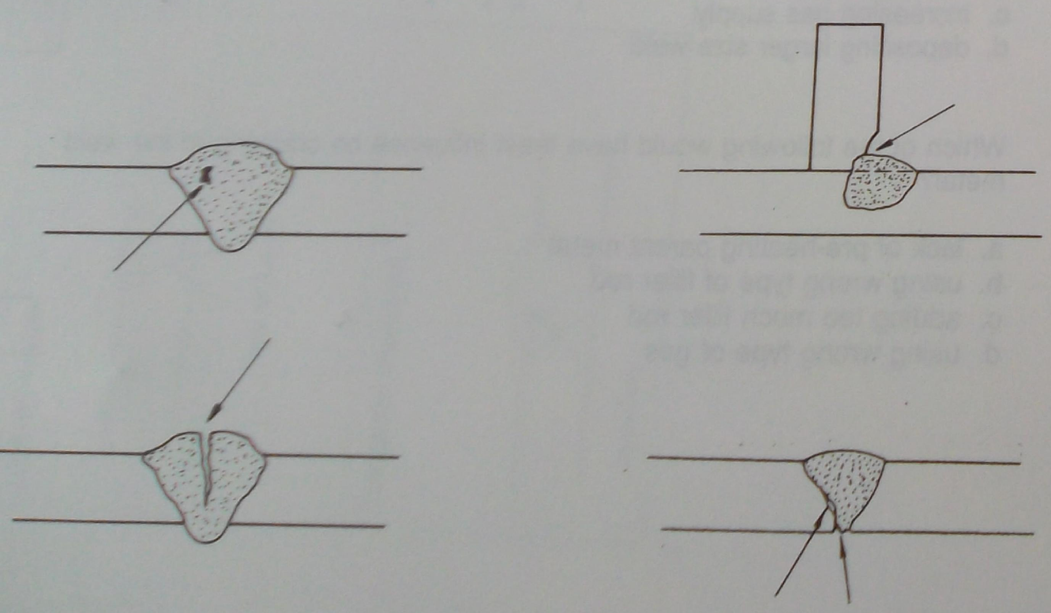

Section 10 Stringer beads - aluminium sheet - flat

Task To deposit stringer beads on aluminium sheet in the flat position.

This section covers part of learning outcome 5 of the National Module Descriptor.

Why To develop the manipulative skills to weld a range of aluminium joint preparations.

To pass Section 10 is a skill practice exercise which is not assessed as part of this module. However, you should make every effort to reach the standards required. The skills you learn in this section are used later for exercises that are formally assessed.

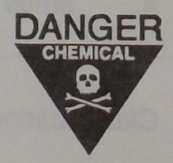

Safety

- Follow OH&S requirements.
- When using shearing equipment make sure your hands are clear of the cutting edges.
- Never leave hot metal objects around the workshop without first indicating to others that they are hot.
- When using degreasing solvents such as acetone and white spirit, make sure that you have adequate ventilation. These solvents should be stored well away from welding operations.

PROCEDURE SHEET

Section 10 Stringer beads - aluminium sheet - flat		
Welding data:		
Machine brand	**Weld current data** Run:	
Type of current:	1 amps	3 amps
Type of electrode:	2 amps	4 amps
Electrode size: Ø	**Material data** Type:	Classification:
Electrode profile		
Type of shielding gas:	Thickness:	
Flow rate l/min:	Surface cleaning:	
Type of filler rod:	Pre heat temperature:	
Size of filler rod: Ø	Ceramic hood size:	
Assessment	**Complies**	**Doesn't comply**
Complete fusion of the parent metal		
Smooth regular contour		
Weld defects		
Name:		

Section 10 Stringer beads - aluminium sheet - flat
(Skill practice - no formal assessment)

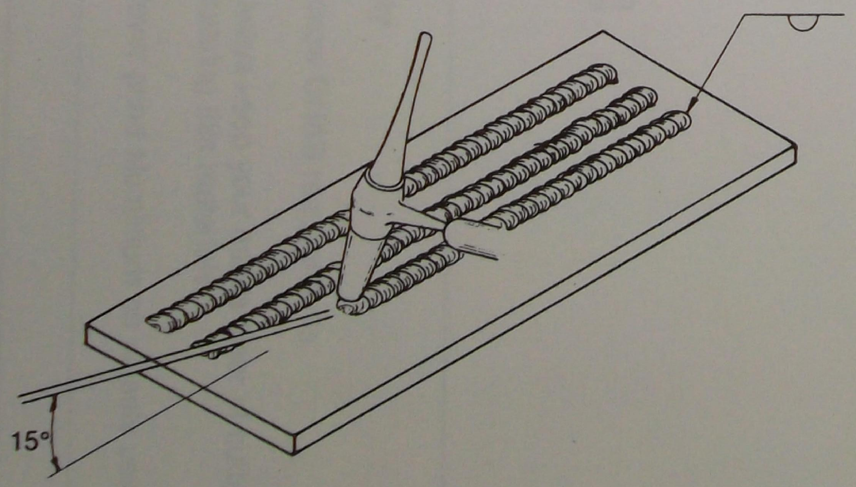

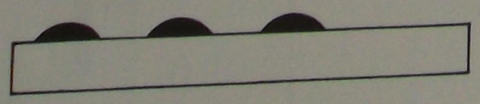

IF IN DOUBT ASK YOUR TEACHER

OBJECTIVE To deposit stringer beads using a filler rod on 3mm pure aluminium sheet.

POSITION Flat

PROCEDURE Your teacher will demonstrate.

METHOD
1. Thoroughly clean weld surface and degrease if necessary.
2. Position sheet on support surfaces.
3. Complete bead exercise and show your work to your teacher.
4. Repeat the exercise and show your completed job for assessment.
5. Complete your procedure sheet.

REQUIREMENTS
- Complete fusion of the parent metal
- smooth regular appearance
- beads to have no surface defects

MATERIAL 3 pieces 75 x 3 x 150mm pure aluminium sheet

UNITS 3

ECONOMY Return unused material and filler rods to the store. Turn off the shielding gas when you're not using it.

otes

Section 11 Butt weld - aluminium sheet - flat (temporary backing)

Task To deposit single run butt weld aluminium sheet using a backing bar device.

This section covers part of learning outcome 5 of the National Module Descriptor.

Why So you will be able to weld aluminium sheet together in the flat position as required by industry.

To pass You will be expected to complete a single run butt weld on aluminium sheet in the flat position to the requirements on the work sheet.



Safety

- Follow OH&S requirements.
- Always keep your hands clear of cutting edges when shearing thin materials.
- Never grind aluminium on wheels used for steel.

PROCEDURE SHEET

Section 11 Butt weld - aluminium sheet - flat (temporary backing)		
Welding data:	**Weld current data**	
Machine brand	Run:	
Type of current:	1 amps	3 amps
Type of electrode:	2 amps	4 amps
Electrode size: Ø	**Material data**	
Electrode profile	Type:	Classification:
Type of shielding gas:	Thickness:	
Flow rate l/min:	Surface cleaning:	
Type of filler rod:	Pre heat temperature:	
Size of filler rod: Ø	Ceramic hood size:	
Assessment	**Complies**	**Doesn't comply**
Correct alignment, assembly and tacking		
Smooth regular contour		
Angular distortion		
Weld penetration		
Weld defects		
Name:		

Section 11 Butt weld - aluminium sheet - flat (temporary backing)
(Formal assessment to pass)

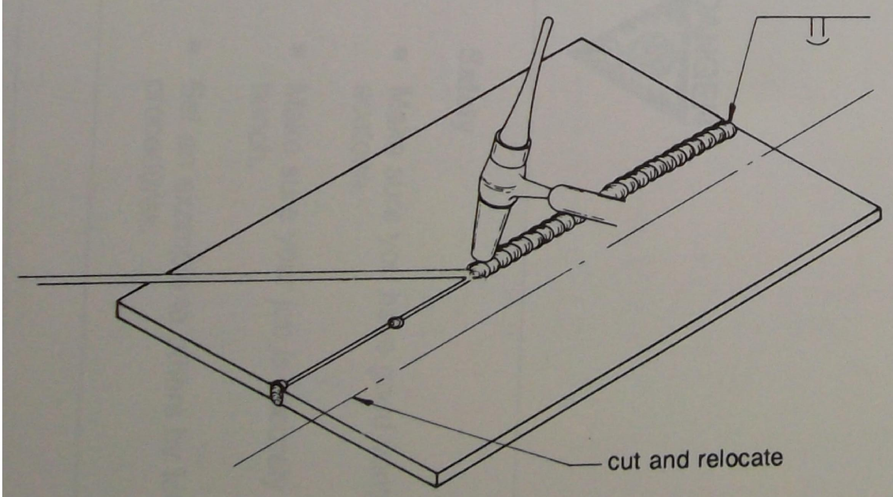

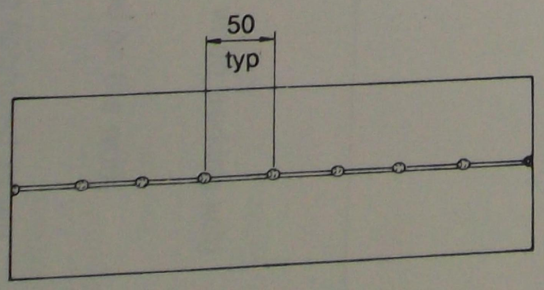

Tack weld detail

IF IN DOUBT ASK YOUR TEACHER

OBJECTIVE To deposit a single run butt on 3mm pure aluminium sheet.

POSITION Flat

PROCEDURE Your teacher will demonstrate.

METHOD
1. Thoroughly clean weld surface and degrease if necessary.
2. Assemble and securely tack weld.
3. Complete the welding exercise and show it to your teacher.
4. Cut and relocate for further practice.
5. Repeat the exercise and show your completed job for assessment.
6. Complete your procedure sheet.

REQUIREMENTS
- correct alignment and assembly
- smooth regular weld contour
- angular distortion 0° to 5°
- penetration to be no less than 20% of the total weld length
- to have no more than 2 significant defects per 150mm of weld length with an accumulated defect area of less than 4 times the square of the material thickness.

MATERIAL 4 pieces 50 x 3 x 150mm pure aluminium sheet

UNITS 2

ECONOMY Return unused material and filler rods to the store. Turn off the shielding gas when you're not using it.

Notes

Section 12 Corner fillet - aluminium sheet - flat

Task To deposit single run corner fillet welds on aluminium sheet in the flat position.

This section covers part of learning outcome 5 of the National Module Descriptor.

Why So you will be able to weld aluminium sheet together in the flat position as required be industry.

To pass You will be expected to complete a single run corner fillet weld on aluminium sheet in the flat position to the requirements on the work sheet.



Safety

- Make sure you have good ventilation when working with acetone.
- Make sure your job is securely located on the work bench.
- Set an example to others by following approved safety procedures.

PROCEDURE SHEET

Section 12 Corner fillet - aluminium sheet flat					
Welding data:					
Machine brand	**Weld current data** Run:				
Type of current:	1	amps	3	amps	
Type of electrode:	2	amps	4	amps	
Electrode size: Ø	**Material data** Type: Classification:				
Electrode profile					
Type of shielding gas:	Thickness:				
Flow rate l/min:	Surface cleaning:				
Type of filler rod:	Pre heat temperature:				
Size of filler rod: Ø	Ceramic hood size:				
Assessment	**Complies**	**Doesn't comply**			
Correct alignment, assembly and tacking					
Smooth regular contour					
Angular distortion					
Weld defects					
Name:					

Section 12 Corner fillet - aluminium sheet - flat
(Formal assessment to pass)

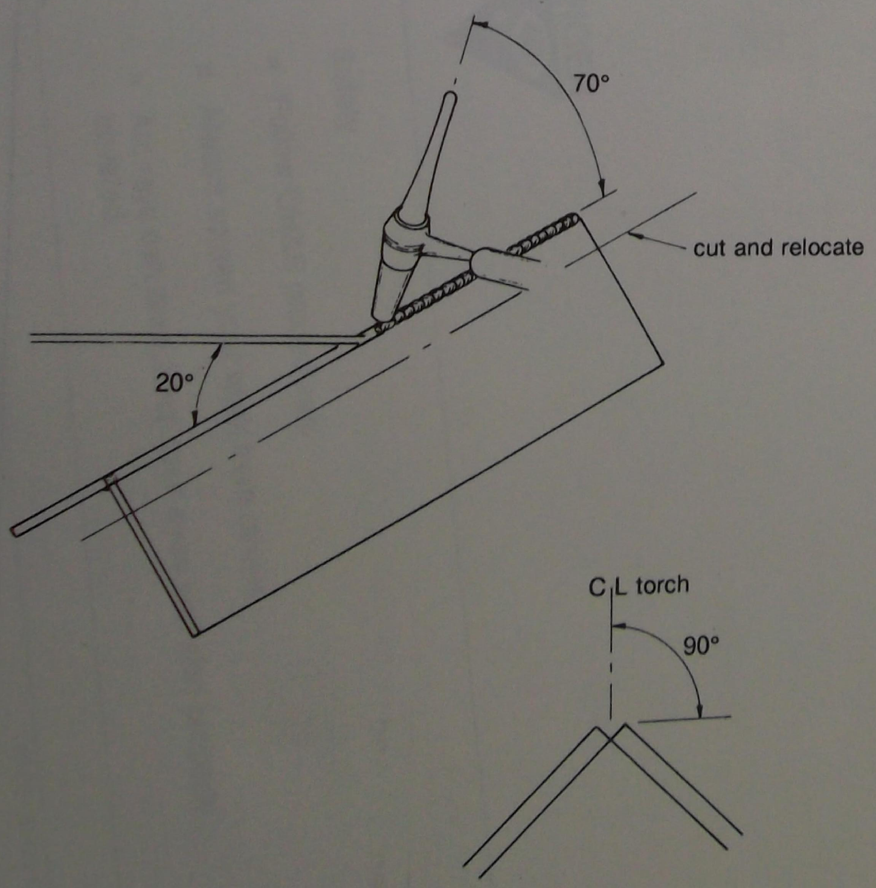

IF IN DOUBT ASK YOUR TEACHER

OBJECTIVE To deposit a single run corner fillet weld on 3mm pure aluminium.

POSITION Flat

PROCEDURE Your teacher will demonstrate.

METHOD
1. Thoroughly clean weld surface and degrease with acetone..
2. Assemble and securely tack weld.
3. Complete the welding exercise and show it to your teacher.
4. Repeat the exercise and show your completed job for assessment.
5. Complete your procedure sheet.

REQUIREMENTS
- correct alignment and assembly
- smooth regular weld contour
- angular distortion 0° to 5°
- to have no more than 2 significant defects per 150mm of weld length with an accumulated defect area of less than 4 times the square of the material thickness.

MATERIAL 4 pieces 50 x 3.0 x 150mm pure aluminium sheet

UNITS 2

ECONOMY Return unused material and filler rods to the store. Turn off the shielding gas when you're not using it.

Section 13 Fillet weld - aluminium sheet - horizontal

Task

Deposit single run fillet welds on aluminium sheet in the horizontal position.

This section covers part of learning outcome 5 of the National Module Descriptor.

Why

So you will be able to weld aluminium sheet together in the horizontal position as required by industry.

To pass

You will be expected to complete a single run fillet weld on aluminium sheet in the horizontal position to the requirements on the work sheet.



Safety

- Follow OH&S procedures.
- Always screen your work from others.
- Arc rays can burn, keep your eyes and skin properly covered.

76

PROCEDURE SHEET

Section 13 Fillet weld - aluminium sheet - horizontal		
Welding data:		
Machine brand	**Weld current data** Run:	
Type of current:	1 amps	3 amps
Type of electrode:	2 amps	4 amps
Electrode size: Ø		
Electrode profile	**Material data** Type:	Classification:
Type of shielding gas:	Thickness:	
Flow rate l/min:	Surface cleaning:	
Type of filler rod:	Pre heat temperature:	
Size of filler rod: Ø	Ceramic hood size:	
Assessment	**Complies**	**Doesn't comply**
Correct alignment, assembly and tacking		
Smooth regular contour		
Angular distortion		
Weld defects		
Name:		

Section 13 Fillet weld - aluminium sheet - horizontal
(Formal assessment to pass)

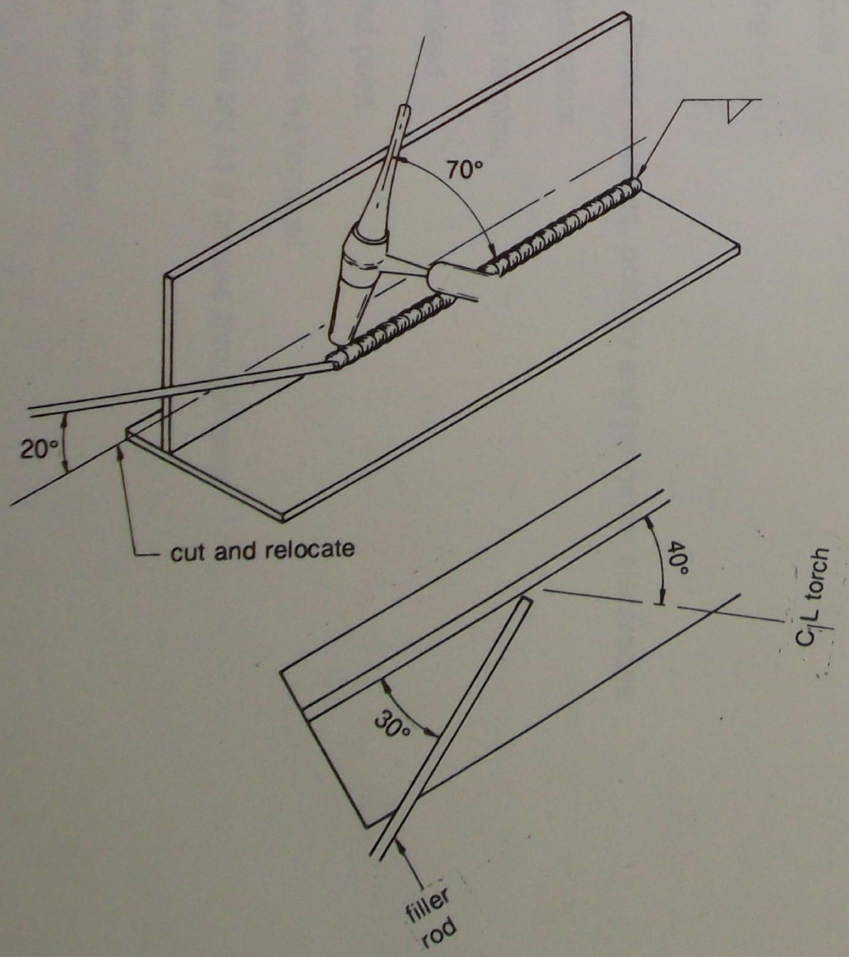

IF IN DOUBT ASK YOUR TEACHER

OBJECTIVE To deposit a single run fillet weld on 3mm pure aluminium sheet.

POSITION Horizontal

PROCEDURE Your teacher will demonstrate.

METHOD
1. Thoroughly clean weld surface and degrease with acetone..
2. Assemble and securely tack weld.
3. Complete the welding exercise and show it to your teacher.
4. Repeat the exercise and show your completed job for assessment.
5. Complete your procedure sheet.

REQUIREMENTS
- correct alignment and assembly
- smooth regular weld contour
- angular distortion 0° to 5°
- to have no more than 2 significant defects per 150mm of weld length with an accumulated defect area of less than 4 times the square of the material thickness.

MATERIAL 4 pieces 50 x 3 x 150mm pure aluminium sheet

UNITS 2

ECONOMY Return unused material and filler rods to the store. Turn off the shielding gas when you're not using it.

Notes

Answers to review questions

Section 1 Gas tungsten arc welding - process and hazards

1b. power source

2d. thick plate

3.c all of the above

4a. tungsten

5d. tungsten

6. DC negative (-)

7. Less smoke and fumes are produced.
Produces a concentrated arc which leads to less distortion.
No slag or fluxes are used.

8. affected by wind and draughts
slow welding speeds

9. shielding

10. Tungsten
electrode

11. welding

Section 5 Power sources, polarity and tungsten electrodes

1b. DC generators

2d. negative terminal

3c. zirconiated

4a. tapered point

5. the positive (+) terminal

6. reignite the arc as it passes through zero

7. pure tungsten
thoriate tungsten
zirconiated tungsten

8. To assist in the surface cleaning of the material by breaking up its oxide.

9.

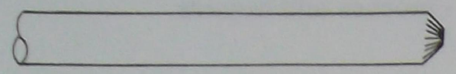

The electrode should be ground to a taper twice the diameter with a flat left on the tip to one third that of the diameter.

10. Good arc starting when used on AC current.
High resistance to contamination when welding aluminium and magnesium.

Section 6 Gases and filler rods

1a. argon

2c. middle brown

3b. hydrogen

4c. deliver gas to the torch

5d. aluminium

6. To prevent the weld and surrounding weld area from contamination from the atmosphere.

7. The gas is chemically inactive and therefore doesn't break down in the arc to form other elements.

8. Flow-meters are used to control the amount of gas flow to the arc via the torch.

9. silicon
manganese

10. niobium
molybdenum

Section 9 Gas tungsten arc welding faults

1d. using too high a weld current

2b. welding in draughty conditions

3a. increasing welding current

4c. adding too much filler rod

5d. all of the above

6b. porosity

7a. undercut

8.

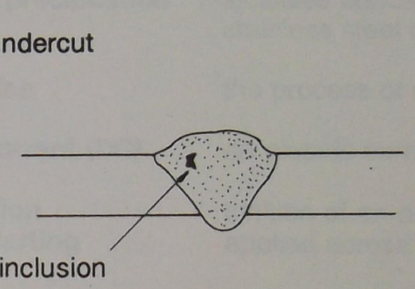

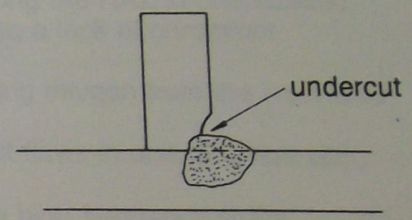

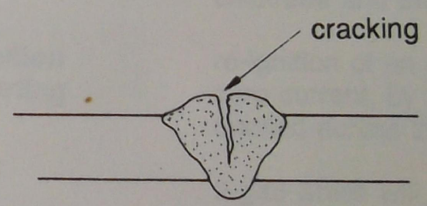

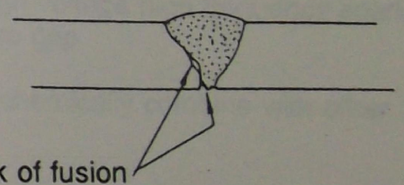

Notes

Words you need to know

∅	symbol representing diameter
alternating current (AC)	an electric current that regularly alters its direction of flow; first flowing in one direction and then reversing to flow in the opposite direction
aluminium	silvery coloured non-ferrous element that is lightweight and non-corrosive
asphyxiation	suffocation owing to lack of oxygen
carbide precipitation	localised corrosion along the HAZ in unstabilised stainless steel owing to a lack of chromium
de-oxidise	the process of removing oxygen from the weld area
direct current (DC)	an electric current that flows in one direction only
HF ignition spark starting	ignition of an arc by a high frequency spark applied across the arc gap
HF ignition unit	a high voltage, high frequency electrical oscillator used to enable an arc to be initiated without contact between the electrode and the workpiece
HF re-ignition spark starting	re-ignition of an AC arc, after extinction at zero current, by a high voltage high frequency spark applied across the arc gap
inert gas	a gas which will not chemically combine with other elements
inverter	a welding machine which changes rectified DC current to AC current at a much lower frequency; this allows a lightweight transformer to be used before the current is finally rectified back to DC
low carbon steel	an iron-based alloy containing between 0.08% to 0.3% carbon
rectifier	a welding machine used for changing AC current to DC current
stabilised	a stainless steel that contains small quantities of niobium or molybdenum to prevent carbide precipitation



AUTOMOTIVE

HEATING AND WELDING

PROCEDURES

7292G

Statement of Intent

The following notes and exercises have been prepared to help you learn the principle operations and safety procedures required when using welding or heating equipment on or around automotive vehicles and is aimed at promoting a safe working environment.

These principle operations and safety procedures have been developed over many years and are recommended safe working practices that will maximise protection and minimise the risk of injury to you and others when welding or heating in a potentially hazardous and dangerous environment.

The intent of this module is to provide the learner with the underpinning knowledge and skills through instruction and practical experiences to enable them to apply simple heating and welding processes relative to automotive service and repair operations.

On successful completion of this module the learner should be able to:

* state the safety precautions that must be followed when using welding or heating equipment on or around automotive vehicles.
* preform the procedures involved in using heat on automotive component parts to affect their assembly or disassembly without damage.
* use the oxy/acetylene welding equipment to lap weld low carbon steel sheeting.
* use the oxy/acetylene cutting equipment to cut low carbon steel plate.
* use the Gas Metal Arc Welding (GMAW) process to lap weld low carbon steel sheeting.
* explain the procedure for welding low carbon steel sheet with the Manual Metal Arc Welding (MMAW) process.

This module should serve as a general guide for the more experienced trade person, and as a training aid for those newly introduced to the trade.

CONTENTS

Purpose and what to learn

Oxy/Acetylene Principle Operations and Safety Procedures
- ☐ Gases used for welding, heating and cutting applications
- ☐ Personal and site safety
- ☐ Equipment handling
- ☐ Vehicle component safety
  - Welding damage
  - Components
  - Damage prevention
- ☐ Questions

Using Heat on Automotive Component Parts
- ☐ Temperature measurement
- ☐ Heating effect
- ☐ Heat for the removal of component parts
- ☐ **Practical exercises**
  - Bearing retaining ring
  - Flywheel ring gear
- ☐ Questions

Oxy/Acetylene Lap Welding on Low Carbon Steel Sheet
- ☐ Weld terminology
  - Butt and fillet joints
- ☐ **Practical exercise**
  - Lap weld 1.6mm low carbon steel
- ☐ Questions

xygen - Fuel Gas Cutting
- ☐ Principles of flame cutting
- ☐ Types of fuel gasses used
- ☐ Fuel gas hazards
- ☐ Oxygen hazards
- ☐ Plasma cutting process
- ☐ **Practical exercise**
  - Oxy - fuel gas cutting 6mm Low Carbon Steel
- ☐ Questions

Metal Arc Welding Process
- ☐ GMAW operaring principles
- ☐ Equipment used
- ☐ **Practical exercise**
  - Lap weld 1.6mm low carbon steel
- ☐ Questions

ual Metal Arc Welding Process
- ☐ Describe the procedure required to lap weld 1.6mm low carbon steel
- ☐ Advantages and disadvantages of MMAW process in automotive applications
- ☐ Questions

OXY/ACETYLENE WELDING, HEATING AND CUTTING

Introduction

The oxy/acetylene process is basically a heating process and is built upon two fundamental principles, firstly, the acetylene and oxygen is burnt to form a flame which is the hottest combination of any two known gases and is capable of fusing most of the common metals and their alloys and secondly, if a stream of oxygen is directed on to a heated piece of iron or steel, it is possible to cut those metals to any desired shape. These principles are applied in the workshop for the cutting of steel. The principles, safety and applications are:

Gases used for welding, heating and cutting applications

OXYGEN (O_2)	ACETYLENE (C_2H_2)
Natural Occuring Gas (21% Approx. by volume in earths atmosphere)	**Manufactured Gas** (calcium carbide to water)
* Sustains all life.	* Hydrocarbon gas. (fuel gas)
* Supports Combustion.	* Exothermic gas.
* Combustion occurs at a higher tempature.	* Flame temperature 335°C..
* Colourless.	* Colourless.
* Odourless.	* Distinctive acrid odour.
* Tasteless.	* Tasteless.
	* Heavier than air.

Oxygen is used industrially in conjunction with acetylene for such universal purposes as metal cutting, welding, flame hardening, flame cleaning, hardfacing and heating applications. This chemical flame combination produces a flame temperature of approximately 3100°C., making it the hottest of all flames in commercial use.

Note: The automotive industry uses the oxy/acetylene process to aid in the service and repair of light and heavy vehicles. This involves the use of the oxy/acetylene process for metal cutting, welding, and heating applications on low carbon steel.

PERSONAL AND SITE SAFETY

OXYGEN	ACETYLENE
Never: * allow industrial oxygen, under pressure, to come into contact with grease, oil, soap or fatty matter. * permit oxygen cylinders to contact any electrical circuit. * dust clothing down with industrial oxygen. * venilate the air with industrial oxygen. * use industrial oxygen for pressure testing lines or containers. * exceed more than 1/7 cylinder draw off rate per hour maximum. * use idustrial oxygen in place of compressed air. * smoke in close proximity to pure oxygen. * expose asphalt paving or fuel to industrial oxygen. **Note:** **Oxygen, in a free state, is compressed in cylinders at extemely high pressures. (13700 KPa.)** **Cylinders are colour coded - BLACK.**	**Never:** * use free acetylene gas outside the cylinder at a pressure exceeding 100 kPa.. * use acetylene in direct contact with unalloyed copper, due to the possible formation of explosive acetylides. * use the cylinder in a position other than upright. * exceed 1/5 cylinder draw off rate per hour maximum. * "crack" an acetylene cylinder. * check for leaks with a naked flame. * decant acetylene from the cylinder. * use acetylene equipment in confined areas without adequate ventilation. **Note:** **The standard cylinder is fitted with fusible plugs, which melt at 100°C., allowing the gas to escape from overheated cylinders before an explosion temperature is reached.** **It is possible to fill the cylinders at pressures up to 1550 KPa without the risk of explosion.** **Regulator max. working gauge pressure 100 KPa..** **Cylinders are colour coded - CRIMSON.**

If industrial oxygen, under pressure, is misused it can result in a fire or explosion, which may cause serious damage/injury to property and personnel.

Acetylene in its liquid or solid state, or as gas under pressure exceeding 100 KPa. is very unstable and can explode with great voilence, even without the presence of air.

Personal Protective Clothing And Equipment Used For Welding, Heating And Cutting

Personnel should be suitably dressed when carrying out welding, heating or cutting operations and it is important that the dress be comfortable and afford proper protection from the various hazards associated with the processes.

Students who are engaged in practical exercises in TAFE designated practical workrooms, workshops, laboratories or any area off campus site used for practical training, shall be required to comply with industry or the TAFE Commissions requirements relative to protective clothing and equipment.

The items of personal protective clothing and equipment are required to protect the operator and others working around the welding, heating or cutting processes from burns, scalds, ultra voilet and infra red arc radiation, excessive brightness and electric shock.

Students will be required to wear as a minimum standard the following items:

Process Used / Protective Item	Oxy/acetylene Heating	Oxy/acetylene Welding or Cutting	Electric Arc Welding
Clothing *	*	*	*
Safety Boot/Shoe Wear	*	*	*
Leather Gauntlets/Gloves	*	*	*
Face or Head Shield	–	–	* Fitted with approved Shade Lens
Oxy Welding Goggles	-	* Fitted with approved Shade Lens	-
Leather Apron	*	*	*
Leather Jacket	*	*	*
Safety Glasses	-	-	*
Anti-Flash Glasses	*	-	*
Leather or Cotton Hat	-	*	*

Legend: * Yes - No Clothing* - Material to be Industrial Quality Cotton Drill.

Note: Protective clothing worn must be free from grease or oil.
An approved Oxy/acetylene welding or Cutting Shade Lens No. 5. (GW)
An approved Electric Arc Welding Shade Lens to 200 Amperes is No. 10 (EW)



1. Place oxygen and fuel gas cylinders together where they are to be used and secure them from falling.

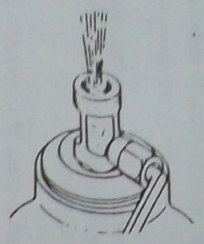

2. Examine the cylinder valve threads to ensure that they are free from damage, then blow out any dust or dirt by "cracking" the oxygen valve. This operation must not be carried out if hands are oily or greasy or in the presence of sparks or naked flames. **DO NOT "CRACK" Acetylene valves, but instead wipe clean with a lint free cloth.**

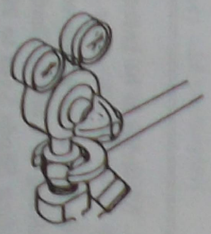

3. Attach the regulators to their respective cylinders **(R.H. Thread OXYGEN - L.H. Thread ACETYLENE)** using the correct spanner and sufficient force to tighten the connection nut firmly. With the regulator adjusting screw in the "out" position open each cylinder valve slowly until the cylinder contents gauge registers the cylinder pressure then continue opening the valve to a **maximum of 1½ turns.**



4. Connect hoses to their respective regulators **(R.H. Thread OXYGEN - L.H. Thread ACETYLENE)** and purge each hose in turn by turning the regulator adjusting screw to supply a pressure of approx. 35KPa.. **This operation must not be carried out in the presence of sparks or naked flames.**

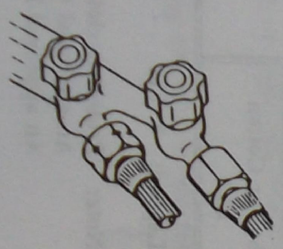

5. Connect the free ends of the oxygen and acetylene hoses to the welding or cutting torch. **(R.H. Thread OXYGEN - L.H.Thread ACETYLENE)**

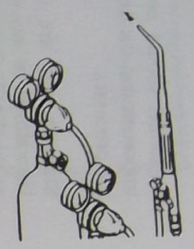

6. Partially open the torch oxygen valve and adjust the regulator to the required pressure, then shut the valve. Repeat the procedure for the acetylene pressure.
Note: Pressure will increase slightly in the hoses when torch valves are closed.

OXY/ACETYLENE CLOSING DOWN PROCEDURE

When you have finished your welding, cutting or heating operation.

1.	First shut off the torch acetylene valve, then shut off the torch oxygen valve.
2.	Close both cylinder valves.
3.	Open the torch acetylene valve and release the pressure in the line.
4.	Release the adjusting screw on the acetylene gas regulator.
5.	Open the torch oxygen valve, and let the oxygen in the lines drain out.
6.	Release the adjusting screw on the oxygen regulator.

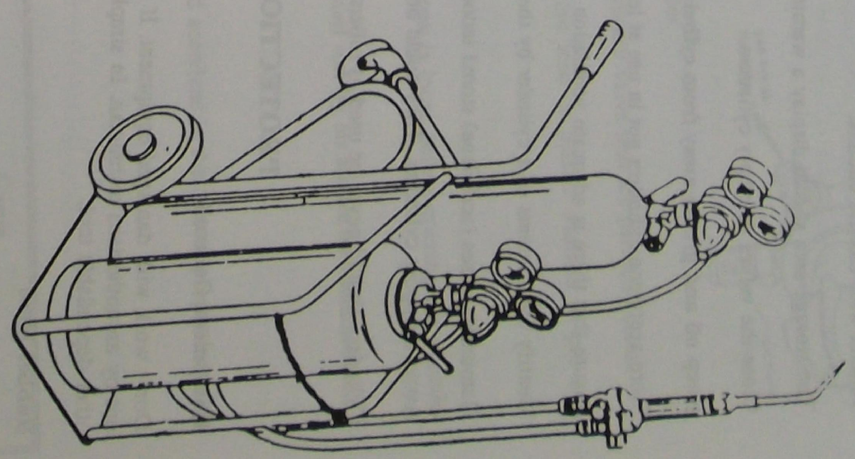

STORAGE OF GAS CYLINDERS

Keep all cylinders, wheather empty or full away from radiators, furnaces, or other sources of heat, and from contact with electric circuits.

The storage area should display a warning sign notice, **DANGER- NO SMOKING- KEEP FIRE AWAY.**

Close the valves of empty cylinders.

Keep oil and grease away from cylinders.

Store acetylene cylinders not in use at least 8 metres from full oxygen cylinders.

Ensure that there is adequate ventilation where gases are stored.

dentify the contents of a cylinder by the label and not by the cylinder colour alone.

lammable gases (acetylene) stored indoors must not exceed 56m^3 by gas volume.

void dropping cylinders. They could burst or the valves might be broken off or seriously damaged.

ylinders should never be used as rollers or supports.

PROTECTION OF PLANT AND EQUIPMENT

uipment Generally

n't work with damaged equipment. If any part of the plant is leaking or damaged, have the repairs carried by an authorised technician. In simple terms, give your welding equipment the care you would give any er dependable tool.

bber Hose

y use hose which is designed specifically for oxygen and fuel gases. i.e. Red for fuel gases and black for gen.

ew hose should be blown out before being put into use.

id the use of excessively long lines of hose.

tect lines of hose from becoming kinked or tangled, tripped over, or run over by vehicles, barrows, etc..

tect hoses from molten slag and hot metal.

not interchange hoses, as an explosive mixture within the hose may be the result.

er use copper tubing in a hose joint. Use only fittings of an approved type.

Regulators

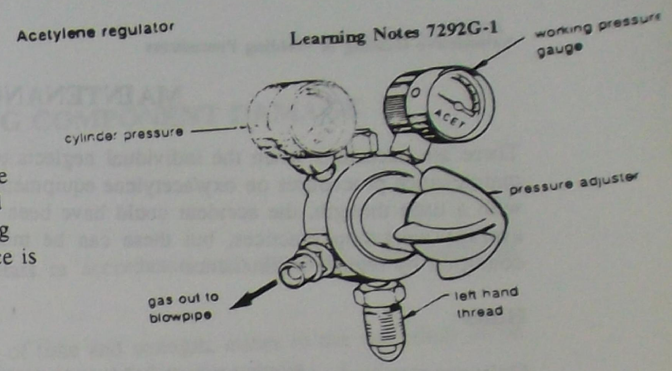

As the pressures in both oxygen and acetylene cylinders are much higher than the pressures required at the welding and cutting blowpipes, it is necessary to use a pressure reducing device between each cylinder and the blowpipe. This device is known as a gas regulator.

The following rules should be observed:

Never have greasy hands or gloves when fitting a regulator to a cylinder.

When attaching a regulator ensure that the bull nose nipple and the cylinder valve seat are perfectly clean.

Important: If seating is faulty do not, under any circumstances, use lead or plastic washers to prevent leakage.

Never use a hammer to tighten the nut when attaching the regulator.

Having attached a regulator to a cylinder, make sure that the tee-screw is loose before opening the cylinder valve.

Note: If a regulator is leaking or damaged, have the repairs carried out by an authorised technician.

Welding Blowpipe

The oxy/acetylene welding blowpipe is designed to mix oxygen and acetylene in the correct proportions, and to control the volume of gases burned at the welding tip.

Operational Problems

Problem	Discription	Cause
Backfire	A load "pop" or snapping sound, from the flame going out, and if the metal is hot enough, will relight the acetylene.	**1.** Shutting off the oxygen first and then the feul gas. **2.** Touching the work with the tip. **3.** Operating the torch at too low a fuel gas pressure. **4.** A loose tip. **5.** Dirt on the seating surface of the tip, mixer or head, causing a leak. **6.** Overheating the tip.
Flashback	When the flame leaves the tip and burns back into the mixing chamber.	

MAINTENANCE PROCEDURES

There are occasions when the individual neglects to exercise "reasonable care" with regards to carrying out maintenance procedures on oxy/acetylene equipment. It is not until an accident happens that it is recalled that with a little thougth, the accident could have been averted. The oxy/acetylene process has added dangers to average workshop practices, but these can be minimised if the equipment/plant is kept in good working condition by regular maintenance .

Hoses

Only use standard connections to join hoses to regulators, etc..

Always tape long hoses together to prevent tangling or kinking.

If a hose becomes damaged and requires a joint, only use approved hose connectors of the correct size and blow out all loose particals of rubber, etc., before the joint is made.

Always examine hoses periodically for leaks, etc., by immersing them in water at working pressure. Any leakage of gas can be detected by the presence of bubbles.

Regulators

Should be of an approved type.

All joints between cylinder valve, regulator and hose connections must be metal to metal. Gas leaks can be detected on these connections by the use of clean soapy water.

Regulators should not be handled roughly.

Regulator Operational Defects

Defect	Discription	Remedy
Scratched bull nose nipple	Leaking seat between bull nose nipple and cylinder valve.	Regulator seat will need replacing.
CREEP	Marked increase in the low pressure gauge reading when blowpipe valve is closed.	Remove and replace regulator seat.
Surging	Fluctuation or variation of the blowpipe flame.	Replace regulator seat.
Whistling or Humming noise	Whistling or humming noise during use.	Replace worn regulator seat.
FREEZING	Occurs with oxygen regulators in cold weather when a large volume of gas is being used.	The regulator may be thawed by pouring on warm, not boiling, water.

POTENTIAL VEHICLE WELDING COMPONENT DAMAGE

Introduction

Welding is used in the automotive industry to join metals in accordance with the manufacturers/clients specifications and expectations.

Repairs by welding can be effected with a minimum loss of time and strength, either in the workshop or on the field site. Parts can often be fabricated, machined and then assembled on the vehicle.

A correctly executed weld has distinct advantages over other methods of joining. i.e. saving of weight, material, cost and time. etc..

When service and/or repair on a vehicle is required, it is important, that the person carrying out the repairs is aware and exercises caution when applying heat, to minimise the risk of damage through heat conduction, radiation and hot metal globules.

Electrical/Electronic Damage

All modern automotive vehicles use some type of electrical/electronic component part. These components and electronic control units (ECU) and sensors are very susceptible to high temperatures.

It is very easy to cause heat damage to electrical/electronic parts on a automotive vehicle. This damage may occur when using incorrect methods during arc and gas welding.

List of Component Parts	Result
* **Capacitors** * **Diodes** * **Resistors** * **Transistors** * **Wiring** * **Wiring Harness**	**Too much heat being applied to component parts may result in operational problems being inbuilt into the vehicles functional system/systems.**

Note: Any arc welding process has the potential to cause damage to the ECU and other sensors due to high voltage surges. Precaution is essential to safe guard the components by isolating the electrical/electronic systems. i.e. disconect the battery and ECU harness connector at the computor.

SENSITIVE COMPONENT PARTS

Introduction

The mechanical properties of metals used in the construction and design of a automotive vehicle, differ, dependent to the operational service condition of the preforming part.

Metals are generally selected because of their suitability, some, can be stretched, twisted, compressed, etc., while others offer great resistance to these actions.

Many metal parts have special welding procedures imposed to ensure these properties are retained after welding.

Others are subject to an engineering report to Australian Design Rules and Authorised Inspection Station Rules governing the use of welding in accordance with Australian Standards AS 1554 Part 1 - "Welding of Steel Structures" SP (Structural Purpose) unless otherwise specified.

Examples of sensitive component parts

Component Parts	Metals Used	Recommendation
SAFETY RELATED SYSTEMS * STEERING - Connecting Rods - Tie Rods - Pitman or Idler arms * BRAKES * SUSPENSION - struts - Control arms - Springs - Stabiliser arms - Cross members	Alloy Steel or Heat Treated Steel or Super Saturated steel	Welding, heating, bending or deforming of components should be avoided if at all possible. Non-Destructive testing is required if these processes are used.

Remember: **This module only deals with the arc and fuel gas welding of Low Carbon Steel(mild steel)**

Painted Parts, Plastic Materials and Electrical/Electronic Units

When heat from the arc or oxy/acetylene flame contacts or nears painted parts, plastic materials and electrical/electronic units, it will melt, burn or scorch the surface. The resulting fumes are also a hazard to the operator.

Material	Hazard	Precaution
PLASTIC FUMES	**SHORT TERM** Eye, skin, throat and lung irritation and burns. Suffocation. Poisoning. **LONG TERM** Lung and colon cancer, liver damage (from some epoxy-coated metals)	**1. Clean contaminants from the metal to be welded for a minimum distance of 50mm either side of the joint.** **2. Ensure that coatings are removed safely before welding.** **3. If the coating or grease cannot be removed, use local exhaust ventilation and airfed respirators.**
PRIMERS, PAINT, GREASE FUMES	**LONG TERM** Cancer. Kidney damage.	**4. Appropriate local exhaust ventilation.**

In cases where fumes occur in welding, heating or cutting operations it is essential to provide ample ventilation. Fumes are produced when the heat of the process, melt and vaporise metals and treated surfaces and produce welding fumes, which can have an adverse effect on health.

Note: **Of particular danger are heavy metals and treated surfaces including, Chromium, Lead, Nickel, Cadmium, Aluminium, Iron oxide, Zinc, Anodised and Power Coated surfaces.**

Welding Or Cutting Containers Which Have Held A Flammable Substance

Introduction

Serious explosions and fires may result if welding, heating or cutting is done on containers that may not be entirely free of flammable solids, liquids, gases and dusts. Precautions are therefore necessary and must be taken to render containers safe for such work.

The following cleaning methods are regarded as satisfactory if properly applied.

Method	Procedure
Steam Cleaning	The filler caps and drain plugs are removed and the contents drained. Low pressure steam is admitted into the container which is positioned so that steam and condensation drains from the lowest point. The steaming process should continue for at least a half-hour after the container has become hot to the touch.
Boiling	The filler caps and drain plugs are removed and the contents drained. The container is then immersed in boiling water. Degreasing agents may be added to the water if desired provided they will have no corrosive effect on the container. Boiling should continue for at least one-half hour.

The following additional safety measures are recommended before welding or cutting operations are carried out on cleaned containers, and should be applied whenever possible.

Filled with Water	Filled with an Inert Gas
The container may be filled with water to a level just below the section to be cut or welded and the area above the water level should be vented to the atmosphere.	During cutting or welding the container may be kept filled with a inert gas. i.e. Nitrogen, Argon or Carbon Dioxide.

Prevention Methods

Before doing any welding, heating or cutting on a automotive vehicle the operator needs and assess whether any damage is likely occur to the component, adjacent component parts or systems of the vehicle. If there is a need to disconnect, remove, shield, clean and replace component parts, this must be done in accordance with the manufactures workshop manual recommendations. This may involve the use of special tools and accessories to achieve satisfactory repair.

OXY/ACETYLENE PRINCIPLES AND SAFETY OPERATIONS

These exercises will help you revise what you've learnt in **learning outcome 1**. If you are having difficulty in understanding or answering any exercises then ask your teacher for help.

Exercises **Answers ↓**

OXYGEN (O_2)

a) Why is industrial oxygen used in combination with acetylene gas?

Answer: 1) _____

2) _____

Refer to P.4/table

b) Why must you never allow industrial oxygen, under pressure, to come into contact with grease, oil, soap or fatty matter?

Answer: _____

Refer to P.5

c) Never use industrial oxygen in place of compressed air because this can result in a _____ or _____ taking place.

Refer to P.5

d) Oxygen is compressed in a cylinder to what pressure?

Answer: _____**kPa..**

Refer to P.5

e) Oxygen cylinders are colour coded _____.

Refer to P.5

f) Why should you never dust clothing down with industrial oxygen?

Answer: _____

Refer to P.5

OXY/ACETYLENE PRINCIPLES AND SAFETY OPERATIONS

These exercises will help you revise what you've learnt in **learning outcome 1**. If you are having difficulty in understanding or answering any exercises then ask your teacher for help.

Exercises **Answers ↓**

ACETYLENE (C_2H_2)

a) What type of fuel gas is acetylene?

Answer: _____

Refer to P.4/Table

b) Never use free acetylene gas outside the cylinder at a pressure exceeding _____**kPa..**

Refer to P.5

c) What can result, if acetylene has direct contact with unalloyed copper?

Answer: _____

Refer to P.5

d) An acetylene cylinder is used in the _____ position.

Refer to P.5

e) Why are Acetylene cylinders fitted with safety devices called fusible plugs?

Answer: _____

Refer to P.5

f) To avoid the risk of explosion, acetylene cylinders are filled to a maximum pressure of:

Answer: _____**kPa..**

Refer to P.5

g) Acetylene regulators are set to a maximum working gauge pressure of _____**kPa..**

Refer to P.5

h) Acetylene cylinders are colour coded _____.

Refer to P.5

OXY/ACETYLENE PRINCIPLES AND SAFETY OPERATIONS

These exercises will help you revise what you've learnt in **learning outcome 1**. If you are having difficulty in understanding or answering any exercises then ask your teacher for help.

Exercises

Answers ↓

OXY/ACETYLENE COMBINATION

a) The oxy/acetylene chemical combination produces a flame temperature of approximately _____ °C.

Refer to P.4

b) The oxy/acetylene chemical flame combination produces a flame temperature which is what in commercial use?

Answer: _____

Refer to P.4

c) The automotive industry uses the oxy/acetylene process to aid in the service and repair of which vehicles?

Answer: _____

Refer to P.4

PERSONAL PROTECTIVE CLOTHING AND EQUIPMENT

a) List the safety items of personal protective clothing and equipment to be worn when **oxy/acetylene heating operations** are to be carried out?

Answers: 1. _____ 2. _____

3. _____ 4. _____

5. _____

Refer to P.6

b) List the safety items of personal protective clothing and equipment to be worn when **oxy/acetylene welding or cutting operations** are to be carried out?

Answers: 1. _____ 2. _____

3. _____ 4. _____

5. _____ 6. _____

Refer to P.6

ASSEMBLY PROCEDURES FOR OXY/FUEL GAS EQUIPMENT

These exercises will help you revise what you've learnt in **learning outcome 1**. If you are having difficulty in understanding or answering any exercises then ask your teacher for help.

Exercises

Answers ↓

a) Why are oxygen and fuel gas cylinders placed securely together before they are used?

Answer: _____

Refer to P.7

b) How does the operator ensure dust or dirt is removed from:

Answers:

An oxygen cylinder valve _____

An acetylene cylinder valve _____

Refer to P.7

c) All connections used for oxygen use a thread type of:

Answer: _____

Refer to P.7

d) All connectios used for acetylene use a type thread of:

Answer: _____

Refert to P.7

e) What is the maximum number of turns each cylinder valve should be opened?

Answer: _____

Refer to P.7

f) During the purging of each hose, you must not carry out this operation in the presence of _____.

Refer to P.7

g) After purging each hose, the operator connects the free ends of the oxygen and acetylene hoses to the _____.

Refer to P.7

POTENTIAL DAMAGE TO VEHICLE COMPONENTS CAUSED BY WELDING

These exercises will help you revise what you've learnt in **learning outcome 1**. If you are having difficulty in understanding or answering any exercises then ask your teacher for help.

Exercises

Answers ↓

a) Metal joining problems arising in the automotive industry are often solved by what welding processes?

Answer: _____

Refer to P.12

b) How is damage caused to electrical/electronic component parts, by welding on automotive vehicles?

Answer: _____

Refer to P.12

c) List six (6) different electrical/electronic component parts which can be damaged by welding?

Answers: 1. _____ 2. _____

3. _____ 4. _____

5. _____ 6. _____

Refer to P.12

d) Names three (3) different types of steels that are used in the construction and design of a automotive vehicle?

Answers: 1. _____

2. _____

3. _____

Refer to P.13

e) Is welding of these steels recommended?

Answer: _____

Refer to P.13

f) If no proper precautions were taken during welding of painted parts and plastic materials, what would the effect be on:

1. the surface? _____

2. the operator? _____

Refer to P.13

DAMAGE PREVENTION METHODS

These exercises will help you revise what you've learnt in **learning outcome 1**. If you are having difficulty in understanding or answering any exercises then ask your teacher for help.

Exercises

Answers ↓

a) Name two (2) methods in which a container may be freed of a flammable solid, liquid, gas or dust?

Answer: 1. _____

2. _____

Refer to P.15

b) What two additional safety measures, should be applied before welding, heating or cutting operations are carried out on cleaned containers?

Answer: 1. _____

2. _____

Refer to P.15

c) Can degreasing agents be added to the water if they have no corrosive effect on the container?

Answer: **Yes. No.**

Refer to P.15

d) Should filler caps and drain plugs be removed from the container before cleaning?

Answer: **Yes. No.**

Refer to P.15

e) If there is a need to disconnect, remove, shield, clean and replace component parts, how would you achieve this?

Answer: _____

_____

Refer to P.16

f) Refering to the above question, what may this involve?

Answer: _____

Refer to P.16

HEAT ON AUTOMOTIVE COMPONENT PARTS

Introduction

During this learning outcome you will preform the procedures involved in using heat on automotive component parts to affect their assembly or disassembly without damage.
In order for you to complete this learning outcome you will need to have the knowledge to determine, understand and apply practical application in temperature measurement, heating affect, heat for the removal of components and shrink fitting.

Temperature Measurement

Temperature is the degree of hotness or coldness measured in respect to an arbitrary zero in the celsius scale.
Our sense of determining hotness by touch is extremely inaccurate, since metal will always feel colder than plastic, for example, even when actually at the same temperature.
Two methods used in the automotive industry to accurately determine temperature are:

Temperature crayons

The operator selects the appropriate crayon and makes a mark on the workpiece, if the work is at the required temperature the mark changes colour. These are available in a range from 30°C to 1650°C..

Contact thermometer

These devices are in common use, i.e. body temperature (medical), atmospheric temperature, home heating systems, cooking and engine temperatures. The thermometer is meant for use in the range of ice to steam. (Up to 330°C.)

One other relatively accurate way to dertermine temperature is the use of a pine match, which chars at a temperature of 335°C. This method is normally associated with the use in alluminium and alluminium alloys.

Heating Effect

In general when a body recieves heat its temperature rises and when heat is taken away its temperature falls.
When a solid recieves sufficient heat it will melt to produce a liquid. If the substance continues to recieve heat it will eventually boil and produce a gas.
The metals metallurgical character is affected by heat and character changes are accelerated when the temperature is raised.
Alloy steel, hardened steel and non-ferrous metals can suffer character change if the temperature rise is to high. This may result in the loss of mechanical properties by either hardening or softening the base metal.
To further complicate matters it is quite often the situation where distortional problems occur from too large an heat input.

Heat for the Removal of Components

Metals expand when heated and contract when cooled. i.e. A speciman of low carbon steel, if not restrained in any way, will increase its dimensions in all directions .000012 times the original dimensions for every degree Celsius the temperature rises. On cooling the dimensions will decrease a similar amount, so restoring the specimen to its original size and shape before heating. The figure .000012 is called the **coefficient of linear expansion** for low carbon steel, and is used to calculate the expansion of a specimen of low carbon steel of any unit of length, and at any desired rise in temperature.

HEAT ON AUTOMOTIVE COMPONENT PARTS

Stud Removal: Demonstration by teacher only on the application of heat for stud removal.

BEARING RETAINING RING

Oxy/acetylene Information

Oxygen and Acetylene regulator pressures: **50 kPa**

Heating Tip Size: **15**

Flame Setting: **Neutral**

Cone Length: **10mm**

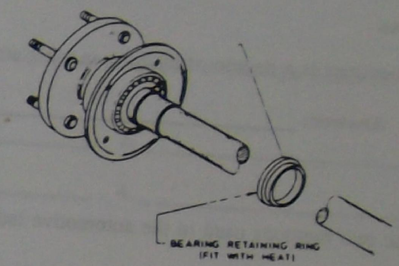

Procedure

1. Place retaining ring on refactory brick.
2. Select temperature crayon (**200°C**) and mark the retaining ring.
3. Apply pre-heat to retaining ring until marks change colour.
4. Slide the retaining ring onto the axle.
5. Press the retaining ring to the bearing face.

Precautions

1. Wear eye protection during heating and pressing operations.
2. There must be no space between the bearing and the retaining ring after pressing.
3. Do not quench the job after completion.

FLYWHEEL RING GEAR

Oxy/acetylene Information

Oxygen regulator pressure: **85 kPa.**

Acetylene regulator pressure: **100 kPa.**

Heating Tip Size: **20**

Flame Setting: **Neutral**

Cone Length: **25mm**

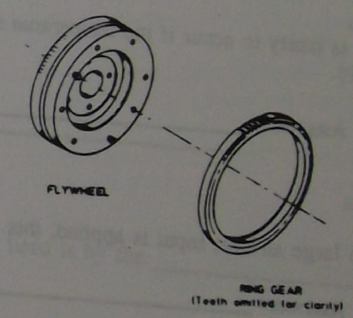

Procedure

1. Uniformly heat ring gear until it is expanded enough to be removed.
2. Place new ring gear on refactory bricks.
3. Select temperature crayon (**240°C.**) and mark the ring gear.
4. Apply pre-heat to ring gear until marks change colour.
5. Locate ring gear to flywheel and tap into place.

Precautions

1. Wear eye protection during this operation.
2. **Do not overheat the ring gear as the teeth will be softened.**
3. Do not quench the job after completion.

COMPARE TEMPERATURE MEASUREMENT OPTIONS

These exercises will help you revise what you've learnt in **learning outcome 2**. If you are having difficulty in understanding or answering any exercises then ask your teacher for help.

Exercises

Answers ↓

a) Temperature is a degree of measure in what arbitrary zero value?

Answer: _____

Refer to P.23

b) Name two methods used in the automotive industry to accurately determine temperature?

Answer: 1. _____

2. _____

Refer to P.23

HEATING EFFECT ON MECHANICAL PROPERTIES AND METAL DISTORTION

Exercises

Answers ↓

a) What is likely to accur if the temperarue rise is too high for alloy steel, hardened steel or non-ferrous metal?

Answer: _____

Rfer to P.23

b) If too large an heat input is applied, this will quite often result in a situation where what occurs?

Answer: _____

Refer to P.23

c) Metals when heated, if not restained in any way, will increase in dimensions for every degree Celsius the temperature rises. What is the name given to this figure?

Answer: _____

Refer to P.23

HEAT SHRINKING AND STUD REMOVAL PROCEDURES

These exercises will help you revise what you've learnt in **learning outcome 2**. If you are having difficulty in understanding or answering any exercises then ask your teacher for help.

Exercises

Answers ↓

A) List four (4) items of personal protective clothing and equipment required to be worn when carrying out heating operations?

Answer: 1. _____ 2. _____

3. _____ 4. _____

Refer to P.6 7292G-1

b) What type of flame setting is required when carrying out heating operations?

Answer: _____

Refer to P.24

c) If overheating of the occurs, what will happen to the ring gear teeth?

Answer: _____

Refer to P.24

d) What is not recommended after completion of the job?

Answer: _____

Refer to P.24

e) One method used to remove a manifold stud from a cylinder head is by the _____ _____.

Refer to P.24

OXY/ACETYLENE LAP WELDING ON LOW CARBON STEEL SHEET

Introduction

During this learning outcome you will preform the procedures involved in using the oxy/acetylene welding process to lap weld 1.6mm low carbon steel sheeting.
In order to complete this learning outcome you will need to have an knowledge to identify a range of weld joints and preparations.

Welding Terminology

The practical application of the oxy/acetylene process is greatly assisted by placing the work in the most convenient position, but the actual strength of the joint depends on the type of weld. This is controlled by the angles formed by the parts to be joined. If these parts meet on the same plane, they can be joined completely, by depositing the weld metal through the full section of the joint. This is not always possible especially if the parts meet on opposing planes and a different type of weld is employed. The types of welds in common use for the joints described are known as:

Fillet Welds

A connection between the end or edge of one part and the face of the other part, which is triangular in cross-section.

Butt Welds

A connection between the ends or edges of two parts abutting each other in a straight line.

Joint Preparations

The following joint preparations are used with the oxy/acetylene process and are varied reliant to the position, type of weld and plate thickness.

Fillet Joints

Tee Joint

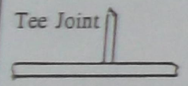

Angle Joint

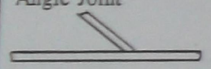

Lap Joint

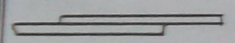

Outside Corner Joint

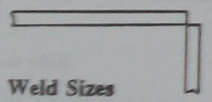

Butt Joints

Flanged Butt Joint

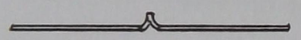

Close Butt Joint

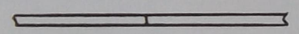

Open Square Butt

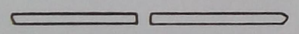

Single Vee Butt Joint

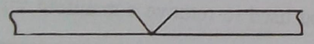

Weld Sizes

Fillet and butt welded joints are designed for the purpose of carrying certain loads in service. A great deal of welding is used on parts and structures whieh are either unstressed or very highly stressed. If the welding operator deposits an undersize or oversize weld on the work, it must be understood there is the possiblity for the weld to fail in service. In order to offset this, it may involve such items as the checking of the blowpipe size, gas pressures in use, Type and size of filler rod, correct welding technique and any other matters which affect the quality of the welded joint.

OXY/ACETYLENE LAP WELDING OF 1.6mm LOW CARBON STEEL

Oxy/acetylene Information

Oxygen and Acetylene Regulator Pressures: **50 kPa.**

Welding Tip Size: **8**

Flame Setting: **neutral**

Cone Length: **5 - 6mm**

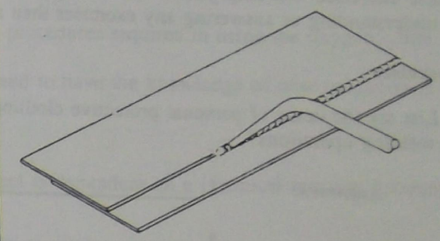

Oxy/acetylene Welding Technique

Method: **Forehand** Filler Rod Dia.: **1.6mm**

Torch Angle: **50° - 60°** Filler Rod Angle: **30° - 40°**

Distance of cone from material surface: **1.6 - 3mm**

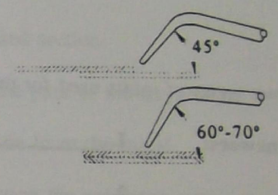

Procedure

1. Overlap the metal parts to be joined a minimum of 8mm.
2. Place tack welds on one side spaced 25mm apart.
3. After tacking the first side, place the job on an anvil and lightly tap the tack welds to align the metal surfaces closely together.
4. On the opposite side finish tacking. This will minimise distortion during welding.
5. Before commencing to complete the joint, ensure the metal surfaces are closely aligned.
6. During the welding operation make sure the filler rod is kept up to the molten pool.

Precautions

1. Personal protective clothing and equipment must be worn.
2. Oxy goggles must be fitted with an approved lens. (shade 5 GW)
3. Do not use a match or a gas lighter to light the torch.
4. Do not walk away from the work bench without turning the torch off.

Remember: **It is your responsibility to exercise REASONABLE CARE when working and using workshop tools and equipment.**

OXY/ACETYLENE LAP WELDING ON LOW CARBON STEEL

These exercises will help you revise what you've learnt in **learning outcome 3**. If you are having difficulty in understanding or answering any exercises then ask your teacher for help.

Exercises **Answers ↓**

a) List six (6) items of personal protective clothing and equipment required to be worn when carrying out welding operations?

Answers: 1._____ 2._____

3._____ 4._____

4._____ 6._____

Refer to P.6 7292G-1

b) Name two types of joints used for the welding of steels?

Answers: 1._____

2._____

Refer to P.27

c) What type of flame setting is required to be used when lap welding low carbon steel?

Answer:_____

Refer to P.28

d) State the type of welding method used to join 1.6mm low carbon steel?

Answer:_____

Refer to P.28

e) Oxy/acetylene welding goggles must be fitted with an approved lens. What shade lens is recommended for use with this process?

Answer:_____

Refer to P.28

OXYGEN - FUEL GAS CUTTING PROCESS

Introduction
During this learning outcome you will preforming the procedures required in using the oxygen - fuel gas cutting process to cut 6mm low carbon steel plate.
In order to complete this learning outcome you will need to have the knowledge of how oxidation is applied to cut ferrous metals.

Principles of Flame Cutting
The flame cutting process used for cutting iron and steel is dependent on a chemical reaction between heated iron and oxygen.
The steps in the flame cutting action are as follows:

(a) The flame is used to raise a small section of the metal to ignition temperature. The ignition temperature for low carbon steel is about 815°C..

(b) The high speed jet of oxygen is released on the heated section.

(c) Rapid oxidation, or burning of the metal occurs in the path of the oxygen jet.

(d) The force of the oxygen jet removes the molten oxide from the metal.

(e) By moving the blowpipe nozzle in the desired direction the oxidising action continues and forms a cut through the metal. In cutting practice this cut through the steel is called the **kerf.**

Types of Fuel Gases
The two most common fuel gases used for manual flame cutting are acetylene and propane. Propane is marketed under trade names such as Handigas, Portagas and Blue Ray gas.

Fuel Gas Hazards

Acetylene - Refer to **Gases used for welding, heating and cutting applications.**

Propane - No attempt should be made to use propane with a cutting blowpipe which is normally used with acetylene. When there is any doubt in this regard the manufacturers of the blowpipe should be consulted.
The method of igniting propane as it issues from the blowpipe nozzle is a little different to the lighting of acetylene.

Oxygen and its Hazards
Refer to **Gases used for welding, heating and cutting applications.**

Oxy/acetylene Cutting Process
Apart from the blowpipe, flame cutting equipment is generally identical to oxy/welding equipment.

Selection of cutting nozzles
A number of factors can affect both the accuracy and the quality of a flame cut surface. Good quality flame cutting results largely from the use of the correct gas pressures and a blowpipe nozzle of suitable size.
To provide quidence, tables need to be consulted for information regarding requirements in relation to different thicknesses of steel, nozzle size and oxygen/acetylene gas pressures.

OXYGEN - FUEL GAS CUTTING PROCESS

Plasma Cutting Process

Plasma is the result of an arc heating a gas to such a high temperature that the gas becomes ionised. At this temperaturethe gas consists of positive ions, negative electrons and neutral atoms. Plasma is often referred to as the fourth state of matter, the others being gas, liquid and solid.

This process can be applied to the cutting of carbon steels, aluminium, stainless steels, nickle and nickle alloys and many of the hard to cut metals.

With this process there is virtually no distortion, whereas distortion may occur in the oxygen - fuel gas flame cutting process.

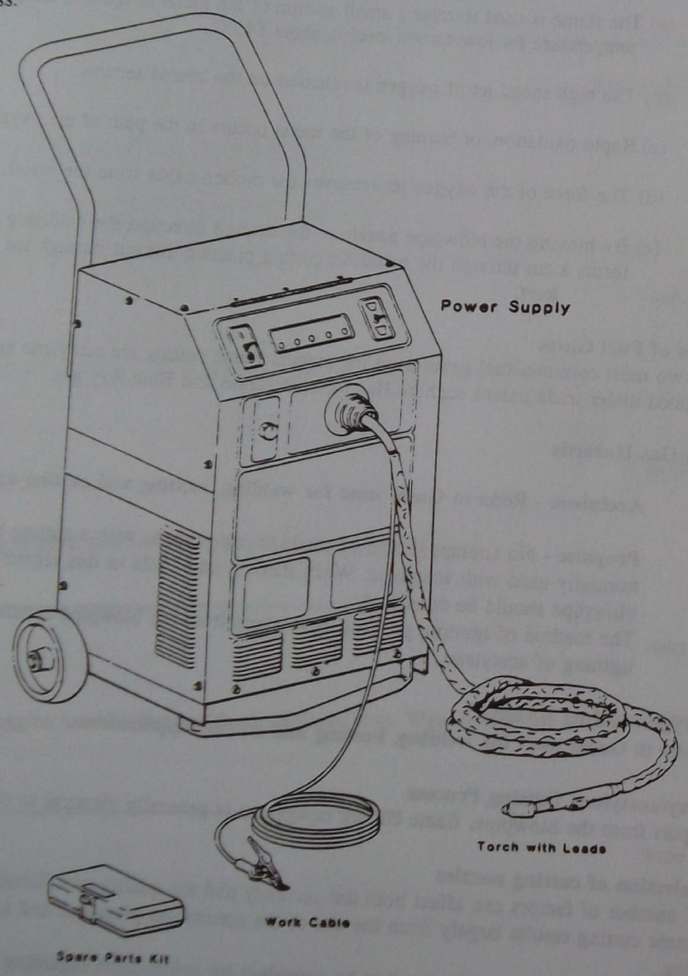

OXY - FUEL GAS CUTTING 6mm LOW CARBON STEEL

Oxy/acetylene Information

Oxygen Regulator Pressures: **180 kPa.**

Acetylene Regulator Pressure: **100 kPa.**

Cutting nozzle Size: **8**

Flame Setting: **neutral**

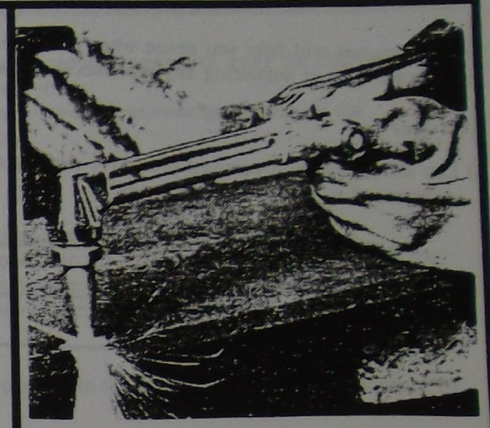

Oxy/acetylene Cutting Technique

1. Raise a small section of the metal to ignition temperature.
2. Release the high speed jet of oxygen onto the heated section.
3. Move the blowpipe in the desired direction and a cut or kerf will appear.

Precautions

1. Personal protective clothing and equipment must be worn.
2. Oxy goggles must be fitted with an approved lens. (shade 5 GW)
3. Do not use a match or a gas lighter to light the torch.
4. Do not walk away from the work bench without turning the torch off.

Note: A number of factors can affect both the accuracy and the quality of a flame cut surface. These may be listed as follows:

1) The composition of the metal.
2) Cleanliness of the work.
3) Correct selection of blowpipe and cutting nozzle.
4) Gas pressures.
5) Cleanliness of the blowpipe nozzle.
6) Correct cutting speed.

Remember: **It is your responsibility to exercise DUTY OF CARE when working and using workshop tools and equipment.**

OXYGEN - FUEL GAS CUTTING LOW CARBON STEEL

These exercises will help you revise what you've learnt in **learning outcome 4**. If you are having difficulty in understanding or answering any exercises then ask your teacher for help.

Exercises **Answers ↓**

a) List six (6) items of personal protective clothing and equipment required to be worn when carrying out oxygen - fuel gas cutting operations?

Answers: 1._____ 2._____

3._____ 4._____

4._____ 6._____

Refer to P.6 7292G-1

b) What is the basic principle on which the flame cutting of iron and steel depends?

Answers:_____

Refer to P.30

c) What type of flame setting is required to be used when oxygen - fuel gas cutting low carbon steel?

Answer:_____

Refer to P.32

d) State the ignition temperature for low carbon steel?

Answer:_____

Refer to P.30

e) Name two common fuel gases used for manual flame cutting?

Answer: 1. _____

2. _____

Refer to P.30

f) Name the type of process used for the cutting of carbon steels, aluminium, stainless steels, nickel and nickel alloys and many of the hard to cut metals?

Answer:_____

Refer to P.31

GAS METAL ARC WELDING PROCESS

Introduction

During this learning outcome you will be preforming the procedures required in using the Gas Metal Arc Welding (GMAW) process to join 1.6mm low carbon steel sheet.
In order to complete this learning outcome you will need to have the knowledge to identify the component parts and understand how the process operates.

Gas Metal Arc Welding Operating Principles

An electric arc is formed between a continuous wire electrode and the workpiece. Once this is established, the wire is fed at a set speed from a wire spool into the arc to form a weld pool. Both the weld pool and wire electrode are fully protected from atmospheric contamination by a inert shielding gas. The wire, shielding gas and electric current required to form the weld are activated semi-automatically by the operator.

The Gas Metal Arc Welding (GMAW) process is very popular in the automotive industry because of its advantages over other types of welding.

Gas Metal Arc Welding Equipment

The equipment for gas metal arc welding consists of:

a) power source (transformer/recttifier)
b) wire feed unit (designed to allow the wire to feed freely and evenly)
c) wire rollers
d) regulator (reduces high cylinder pressure to a safe working pressure)
e) flow meter (adjusts and maintains a constant/even gas flow rate)
f) gas cylinder
g) gas shielding (protects weld from atmospheric contamination)
h) contact tip

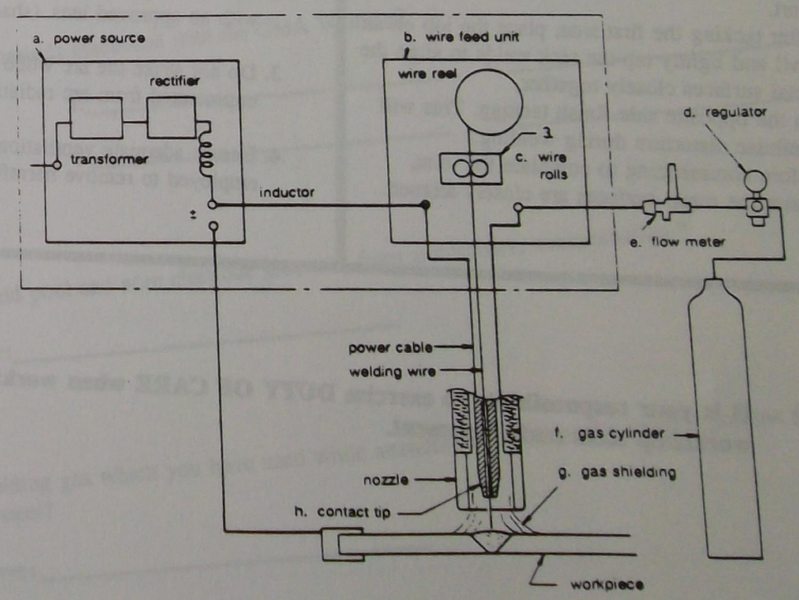

GAS METAL ARC WELDING PROCESS

GMAW Information

Mode of Transfer: **Short Circuit (Dip)**

Wire Size: **0.8mm**

Arc volts Setting:

Arc Current Setting:

Wire Feed Rate:

Shielding Gas Used: **Argoshield 51 (Argon/Helium)**

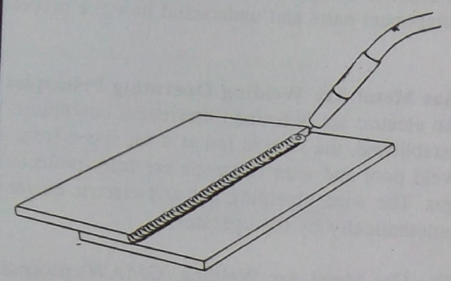

GMAW Technique

1. Overlap the metal parts to be joined a minimum of 8mm.
2. Place tack welds on one side spaced 25mm apart.
3. After tacking the first side, place the job on an anvil and lightly tap the tack welds to align the metal surfaces closely together.
4. On the opposite side finish tacking. This will minimise distortion during welding.
5. Before commencing to complete the joint, ensure the metal surfaces are closely aligned.

Precautions

1. Personal protective clothing and equipment must be worn.
2. Arc welding helmets must be fitted with an approved lens. (shade 10 EW)
3. Do not strike the arc while your face is unprotected from arc radiation.
4. Ensure adequate ventilation is employed to remove harmful fumes.

Remember: It is your responsibility to exercise DUTY OF CARE when working and using workshop tools and equipment.

GAS METAL ARC WELDING OF 1.6mm LOW CARBON STEEL

xercises will help you revise what you've learnt in **learning outcome 5**. If you are having difficulty derstanding or answering any exercises then ask your teacher for help.

Answers ↓

rises

st six (6) items of personal protective clothing and equipment required to be worn when carrying out s Metal Arc Welding (GMAW) operations?

Answers: 1._____ 2._____

3._____ 4._____

4._____ 6._____

Refer to P.6 7292G-1

hat is the purpose of the wire feed control?

Answers:_____

Refer to P.34

) What function does the voltage control have?

Answer:_____

Refer to P.34

d) List four safety hazards associated with the GMA Welding?

Answer: 1._____ 2._____

3._____ 4._____

Refer to P.34

e) How is the weld pool and wire electrode protected from atmospheric contamination ?

Answer:_____

Refer to P.34

f) Name a shielding gas which you have used while attending this college for general purpose GMAW of low carbon steel?

Answer:_____ **Refer to P.35**

MANUAL METAL ARC WELDING PROCESS

Introduction

During this learning outcome you are to discribe the procedures required in using the Manual Metal Arc Welding (MMAW) process to join 1.6mm low carbon steel sheet.
In order to complete this learning outcome you will be showen a practical demonstration, describing the procedure that is required to lap weld low carbon steel sheet and an explanation on the advantages and disadvantages of using the MMAW process in automotive applications.

Manual Metal Arc Welding

Manual Metal Arc Welding is a fusion welding process which uses the heat of an arc formed between the consumable electrode and the workpiece to melt the joint area. The arc and weld pool are shielded by gases and slag which result from the deposition of the coating material surrounding the electrode. Th electrode material is transferred across the arc to fill the joint and must be continuously fed forward by the operator to maintain a constant arc length.

The Manual Metal Arc Welding (MMAW) process is very popular in the automotive industry because its advantages over other types of welding.

Manual Metal Arc Welding Equipment

The equipment for Manual Metal Arc Welding consists of:

a) A welding power source (transformer or generator)
b) Electrode Holder
c) Electrode Cable
d) Return Clamp
e) Return Cable

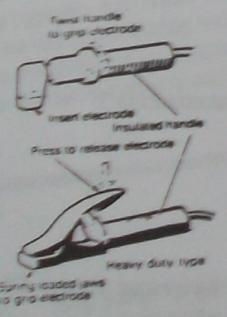

ELECTRODE HOLDERS

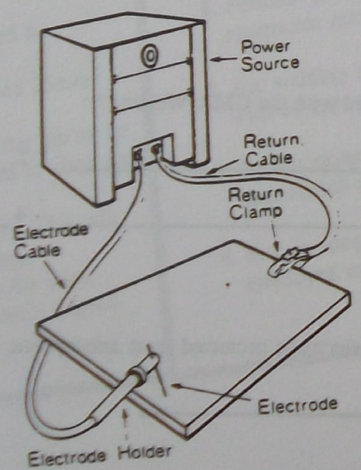

CABLE CONNECTIONS (SECONDARY SIDE)

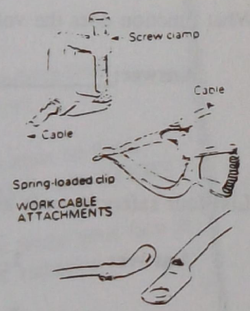

CABLE ATTACHMENTS

MANUAL METAL ARC WELDING PROCESS

MMAW Information

Material Size: 1.6mm low carbon steel

Type of Joint: Lap Joint

Electrode Size: 2.4mm dia.

Current Setting: 45 to 50 ampere

Arc Gap: 2.4mm Max.

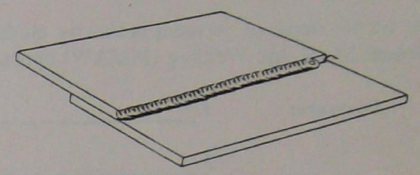

MMAW Technique

1. Overlap the metal parts to be joined a minimum of 8mm.
2. Place tack welds on one side spaced 25mm apart.
3. After tacking the first side, place the job on an anvil and lightly tap the tack welds to align the metal surfaces closely together.
4. On the opposite side finish tacking. This will minimise distortion during welding.
5. Before commencing to complete the joint, ensure the metal surfaces are closely aligned.

Precautions

1. Personal protective clothing and equipment must be worn.
2. Arc welding helmets must be fitted with an approved lens. (shade 10 EW)
3. Do not strike the arc while your face is unprotected from arc radiation.
4. Ensure adequate ventilation is employed to remove harmful fumes.

Remember: **It is your responsibility to exercise DUTY OF CARE when working and using workshop tools and equipment.**

MANUAL METAL ARC WELDING OF 1.6mm LOW CARBON STEEL

These exercises will help you revise what you've learnt in **learning outcome 6**. If you are having difficulty in understanding or answering any exercises then ask your teacher for help.

Exercises

Answers ↓

a) List six (6) items of personal protective clothing and equipment required to be worn when carrying out Manual Metal Arc Welding (MMAW) operations?

Answers: 1._____ 2._____

3._____ 4._____

4._____ 6._____

Refer to P.6 7292G-1

b) List the equipment required for Manual Metal Arc Welding?

Answers: 1._____ 2._____

3._____ 4._____

5._____

Refer to P.37

c) How is the arc and weld pool shielded from atmospheric contamination?

Answer: _____

_____

Refer to P.37

d) List four safety hazards associated with the MMA Welding?

Answer: 1._____ 2._____

3._____ 4._____

Refer to P.37

e) Describe how the electrode material is transferred across the arc to fill the joint in MMAW ?

Answer:_____

Refer to P.37

NSW Module Resource Manual for the National Metal and Engineering Courses

Fabrication Stream

NF04
Oxyacetylene Welding 1

Student Workbook

TAFE NSW

Section 12 Braze weld fillet-horizontal

Suggested duration 2 hours

Purpose To deposit a braze welded fillet in the horizontal position.

Objectives At the end of this section you should be able to:

- Deposit a braze weld fillet on low carbon steel sheet in the horizontal position to the following requirements
  - correct alignment and assembly
  - smooth regular weld contour
  - angular distortion 0° to 5°
  - an accumulated defect area of less than four times the square of the sheet thickness in each 150mm weld length
  - weld size not less than the material thickness
- Record the weld procedure
- Follow Occupational Health and Safety (OH&S) workshop procedures



- Wear safety glasses.
- Take care when grinding or linishing thin sheet steel.
- Wash your hands after using brazing flux.
- Take care when you hold thin sheet steel for grinding.

ment — 20 minutes

To braze weld low carbon sheet steel to the specifications listed below.

1 piece 50 x 1.6 x 150mm low carbon steel
1 piece 25 x 1.6 x 150mm low carbon steel

3

d — Ø1.6mm or 2.5mm manganese bronze

Number 8 or 10

Copper and brass flux

y — Join all short ends of filler rods

Horizontal

ons

1. Linish bonding surfaces of the steel to improve tinning properties
2. Tack weld the sheet
3. Flux the joint and/or filler rod and complete the weld
4. The tip is moved forward and back along the joint to allow the bronze filler to flow smoothly through out the joint
5. Show your work to your teacher
6. Repeat the exercise using the second sheet as shown
7. Show your work to your teacher
8. Complete your procedure sheet
9. For assessment repeat the task using the control data on the procedure sheet

ations

- correct alignment and assembly
- smooth regular weld contour
- angular distortion 0°-5°
- an accumulated defect area of less than four times the square of the sheet thickness in each 150mm weld length
- weld size - not less than the material thickness

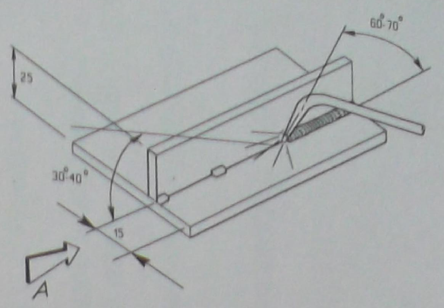

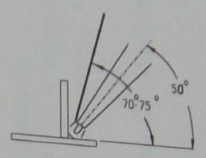

View A

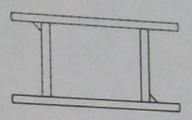

Method of attachment for maximum material use

Skill practice NF04-SP10 Braze weld fillet, horizontal
Competency test NF04-CT8 Learning outcome 3

Skill practice NF04-SP10 Braze weld fillet, horizontal
Competency test NF04-CT8 Learning outcome 3

Procedure sheet

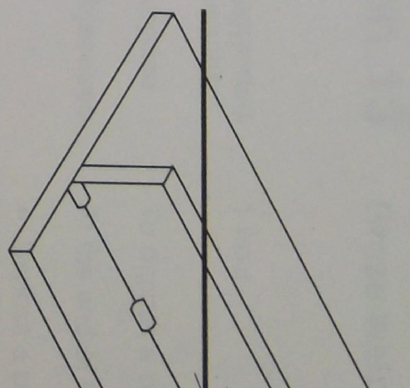

Complete the control data table below:

Gas data regulator pressure: O_2 _____ C_2H_2 _____ flame type: weld tip size:	**Consumables data** filler type: filler diameter: flux: angles: torch: rod:
Material data type: thickness:	**Weld time** start: finish:

Assessment

You will be assessed on your ability to meet the following specifications:

- correct alignment and assembly
- smooth regular weld contour
- angular distortion 0°-5°
- an accumulated defect area of less than four times the square of the sheet thickness in each 150mm weld length
- weld size not less than the material thickness

Braze weld fillet - horizontal (formal assessment)

Total time 2 hours

Assessment 20 minutes

Task To braze weld low carbon sheet steel to the specifications listed below.

Material 1 piece 50 x 1.6 x 150mm low carbon steel
1 piece 25 x 1.6 x 150mm low carbon steel

Units 3

Filler rod Ø1.6mm or 2.5mm manganese bronze

Tip size Number 8 or 10

Flux Copper and brass flux

Economy Join all short ends of filler rods

Position Horizontal

Instructions

1. Linish bonding surfaces of the steel to improve tinning properties
2. Tack weld the sheet
3. Flux the joint and/or filler rod and complete the weld
4. The tip is moved forward and back along the joint to allow the bronze filler to flow smoothly through out the joint
5. Show your work to your teacher
6. Repeat the exercise using the second sheet as shown
7. Show your work to your teacher
8. Complete your procedure sheet
9. For assessment repeat the task using the control data on the procedure sheet

Specifications

- correct alignment and assembly
- smooth regular weld contour
- angular distortion 0°-5°
- an accumulated defect area of less than four times the square of the sheet thickness in each 150mm weld length
- weld size - not less than the material thickness

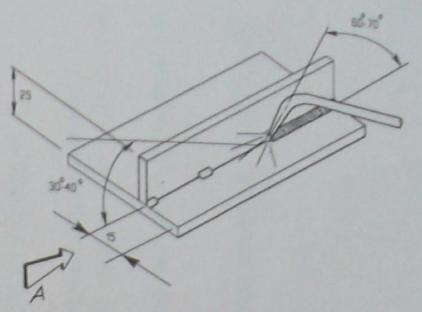

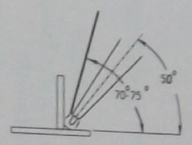

View A

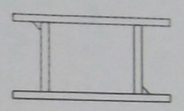

Method of attachment for maximum material use

Skill practice NF04-SP10 Braze weld fillet, horizontal
Competency test NF04-CT8 Learning outcome 3

Procedure sheet

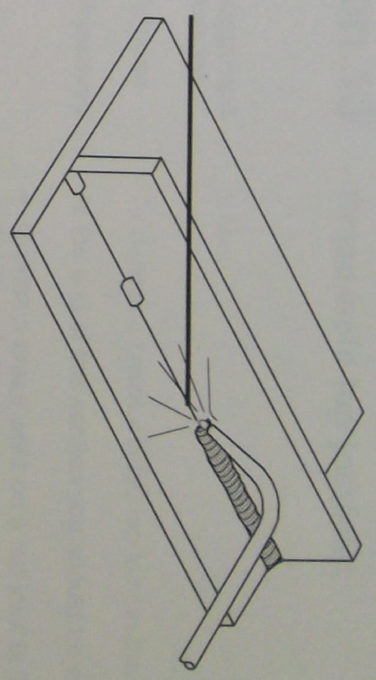

Complete the control data table below:

Gas data regulator pressure: O_2 _____ C_2H_2 _____ flame type: weld tip size:	**Consumables data** filler type: filler diameter: flux: angles: torch: rod:
Material data type: thickness:	**Weld time** start: finish:

Assessment

You will be assessed on your ability to meet the following specifications:

- correct alignment and assembly
- smooth regular weld contour
- angular distortion 0°-5°
- an accumulated defect area of less than four times the square of the sheet thickness in each 150mm weld length
- weld size not less than the material thickness

Skill practice NF04-SP10
Competency test NF04-CT8 Learning outcome 3

Braze weld fillet - horizontal (formal assessment)

Total time 2 hours

Assessment 20 minutes

Task To braze weld low carbon sheet steel to the specifications listed below.

Material
1 piece 50 x 1.6 x 150mm low carbon steel
1 piece 25 x 1.6 x 150mm low carbon steel

Units 3

Filler rod ∅1.6mm or 2.5mm manganese bronze

Tip size Number 8 or 10

Flux Copper and brass flux

Economy Join all short ends of filler rods

Position Horizontal

Instructions

1. Linish bonding surfaces of the steel to improve tinning properties
2. Tack weld the sheet
3. Flux the joint and/or filler rod and complete the weld
4. The tip is moved forward and back along the joint to allow the bronze filler to flow smoothly through out the joint
5. Show your work to your teacher
6. Repeat the exercise using the second sheet as shown
7. Show your work to your teacher
8. Complete your procedure sheet
9. For assessment repeat the task using the control data on the procedure sheet

Specifications

- correct alignment and assembly
- smooth regular weld contour
- angular distortion 0°-5°
- an accumulated defect area of less than four times the square of the sheet thickness in each 150mm weld length
- weld size - not less than the material thickness

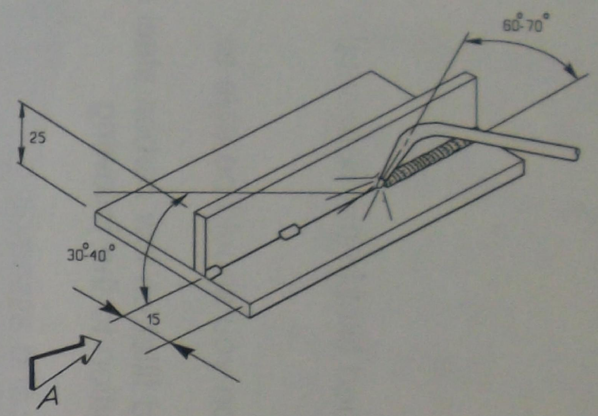

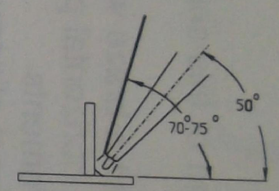

View A

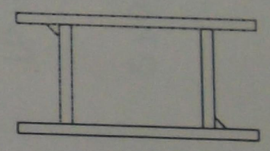

Method of attachment
for maximum material use

Notes

Section 13 Braze weld lap joint-flat

Suggested duration 1 hour

Purpose To deposit a braze welded lap joint in the flat position.

Objectives At the end of this section you should be able to:

- Deposit a braze weld on a lap joint in the flat position on low carbon steel sheet to the following requirements
  - correct alignment and assembly
  - smooth regular weld contour
  - an accumulated defect area of less than four times the square of the sheet thickness in each 150mm weld length
  - weld size not less than the material thickness
- Record the weld procedure
- Follow Occupational Health and Safety (OH&S) workshop procedures



- **Wear safety glasses when grinding or linishing eliminate "plate".**
- Oxygen and acetylene cylinders should always be opened slowly.
- Suitable protective oxy-goggles must always be worn when cutting or welding.
- Always be careful when cooling welds by quenching, especially welded pipes.
- Take care when you hold thin sheet steel for linishing.

Skill practice NF04-SP11
Competency test NF04-CT9 Learning outcome 3

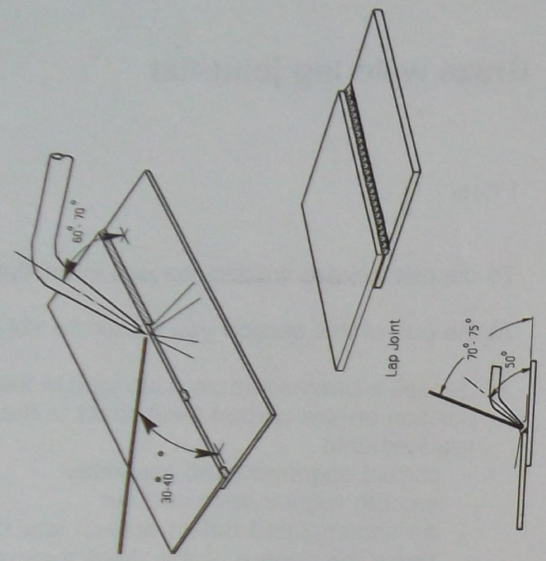

Braze weld lap joint, flat

Total time	1 hours
Assessment	20 minutes
Task	To braze weld low carbon sheet steel to the specification listed below.
Material	2 pieces 50 x 2.5 x 150mm low carbon steel
Units	3
Filler rod	Ø1.6mm or 2.5mm manganese bronze
Tip size	Number 8 or 10
Flux	Copper and brass flux
Economy	Join all short ends of filler rods
Position	Flat

Instructions

1. Linish bonding surfaces of the steel to improve tinning properties
2. Locate steel as per sketch and tack weld
3. Flux the joint and/or filler rod and complete the weld
4. The tip is moved forward and back along the joint to allow the bronze filler to flow smoothly through out the joint
5. Show your work to your teacher
6. Repeat the exercise
7. Show your work to your teacher
8. Complete your procedure sheet
9. For assessment repeat the task using the control data on the procedure sheet

Specifications

- correct alignment and assembly
- smooth regular weld contour
- angular distortion 0°-5°
- an accumulated defect area of less than four times the square of the sheet thickness in each 150mm weld length
- weld size - not less than the material thickness

Skill practice NF04-SP11 Braze weld lap joint, flat
Competency test NF04-CT9 Learning outcome 3

Procedure sheet

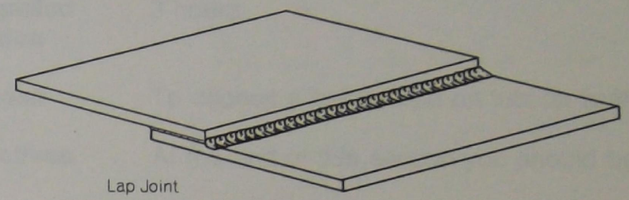

Complete the control data table below:

Gas data regulator pressure: O_2 _____ C_2H_2 _____ flame type: weld tip size:	**Consumables data** filler type: filler diameter: flux: angles: torch: rod:
Material data type: thickness:	**Weld time** start: finish:

Assessment

You will be assessed on your ability to meet the following specifications:

- correct alignment and assembly
- smooth regular weld contour
- angular distortion 0°-5°
- an accumulated defect area of less than four times the square of the sheet thickness in each 150mm weld length
- weld size not less than the material thickness

Notes



Section 14 Braze weld tube-flat

Suggested duration 3 hours

Purpose To deposit a braze weld on tubular branch section.

Objectives At the end of this section you should be able to:

- Deposit a braze weld on tubular branch sections in the flat position to the following requirements
  - correct alignment and assembly
  - smooth regular weld contour
  - angular distortion 0° to 5°
  - an accumulated defect area of less than four times the square of the tube thickness in each 150mm weld length
  - weld size not less than the material thickness
- Record the weld procedure
- Follow Occupational Health and Safety (OH&S) workshop procedures



- Wear proper eye protection.
- Take care when grinding or linishing thin sheet steel
- Wash your hands after using brazing flux
- It is important to have good ventilation or use a respirator when braze welding



Braze weld tube - flat

Total time	3 hours
Assessment	30 minutes
Task	To braze weld low carbon tube to the specification listed below.
Material	1 pieces Ø32 NB tube x 300mm
Units	3
Filler rod	Ø1.6mm or 2.5mm manganese bronze
Tip size	Number 8 or 10
Flux	Copper and brass flux
Economy	Join all short ends of filler rods
Position	Flat and rotated

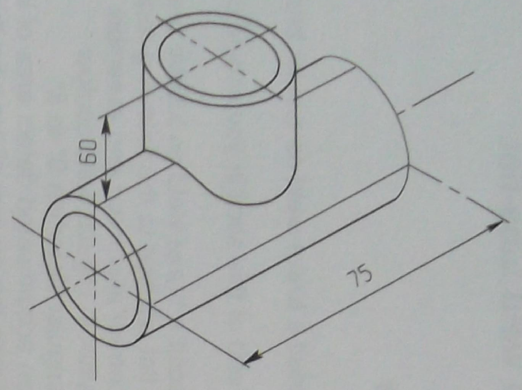

Instructions

1. Mark out, cut and file branch to fit tube.
2. Clean and degrease tube
3. Assemble and tack weld branch to tube
4. Flux the joint and/or filler rod and complete the weld
5. Complete your procedure sheet
6. For assessment repeat the task using the control data on the procedure sheet

Specifications

- correct alignment and assembly
- smooth regular weld contour
- angular distortion 0°-5°
- an accumulated defect area of less than four times the square of the tube thickness in each 150mm weld length
- weld size - not less than the material thickness

Skill practice NF04-SP12 Braze weld tube-flat
Competency test NF04-CT10 Learning outcome 3

Procedure sheet

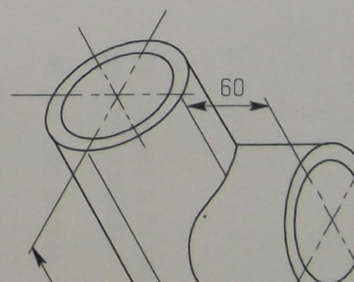

Complete the control data table below:

Gas data regulator pressure: O_2 _____ C_2H_2 _____ flame type: weld tip size:	**Consumables data** filler type: filler diameter: flux: angles: torch: rod:
Material data type: thickness:	**Weld time** start: finish:

Assessment

You will be assessed on your ability to meet the following specifications:

- correct alignment and assembly
- smooth regular weld contour
- angular distortion 0°-5°
- an accumulated defect area of less than four times the square of the tube thickness in each 150mm weld length
- weld size not less than the material thickness

Notes

Section 15 Butt weld cast iron-braze weld-semi vertical

Suggested duration 2 hours

Purpose To deposit a braze weld on grey cast iron in the semi vertical position.

Objectives At the end of this section you should be able to:

- Deposit a braze weld on grey cast iron in the semi-vertical position to the following requirements
  - correct alignment and assembly
  - smooth regular weld contour
  - angular distortion 0° to 5°
  - an accumulated defect area of less than the square of the material thickness in each 150mm weld length
  - weld penetration for a minimum of 20% of the weld length.
  - weld size - not less than the material thickness
- Record the weld procedure
- Follow Occupational Health and Safety workshop procedures



- Always make sure you have proper ventilation when you're welding.
- Never stand directly in front of the oxygen cylinder valve when you're opening the cylinder.
- Never allow a gas cylinder near an electric arc or flame, as it may explode.

Technical information

Cast iron braze welding applications

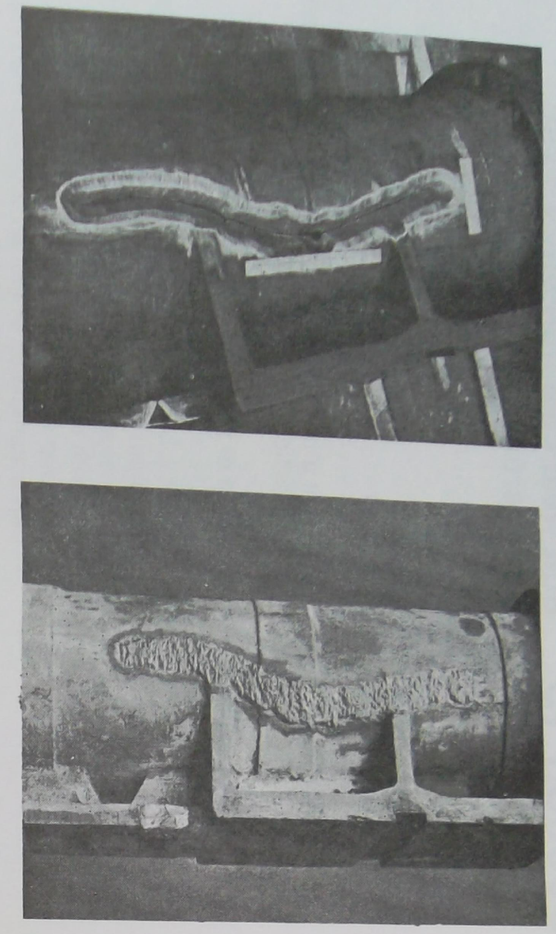

Cast iron braze weld



Brazing steel tube

Skill practice NF04-SP13
Competency test NF04-CT11 Learning outcome 3

Butt weld cast iron - braze weld - semi vertical

Total time	2 hours
Assessment	30 minutes
Task	To butt weld grey cast iron with the braze welding process to the specifications listed below
Material	2 pieces 38 x 12 x 130mm grey cast iron coupons
Units	2
Filler rod	Ø3, 5 or 6mm manganese bronze
Tip size	Number 12 (1.2mm) or 15 (1.5mm)
Flux	Bronze flux
Economy	Join all short ends of filler rods
Position	Semi-vertical

Instructions

1. File bonding faces to remove impurities and the oxide layer
2. Assemble and tack coupons at each end
3. Incline the coupons in a semi-vertical position and lightly pre-heat
4. Build a bronze ledge at the base of the preparation and commence to weld
5. After completion, fracture the casting through the weld and examine for bond and internal defects
6. Show your work to your teacher
7. Complete your procedure sheet
8. For assessment repeat the task using the control data on the procedure sheet

Specifications

- correct alignment and assembly
- smooth regular weld contour
- angular distortion 0°-5°
- an accumulated defect area of less than the square of the material thickness in each 150mm weld length
- weld penetration for a minimum of 20% of the weld length
- weld size - not less than the material thickness

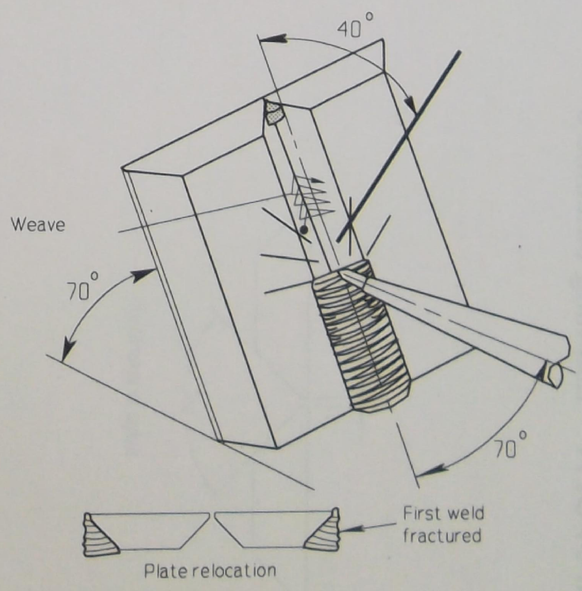

Plate relocation

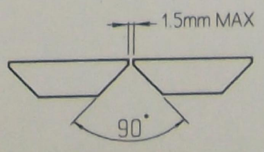

Edge preparation

Undersized and oversized welds

Fillet and butt welded joints are designed to carry certain loads. These loads are calculated from tests carried out on similar joints. An allowance is made for safety.

It's necessary for the welding operator to deposit welds to the dimensions specified by the designer. The designer knows how the welds will behave in service and asks for weld deposits of a particular size to meet the conditions. If the operator then deposits an undersized weld, the weld may fail in service. If the weld is over reinforced, the joint will be less flexible and the metal structure beside it may fail. The rigidity of an oversized weld can also cause excessive stress loading on other sections of the weld.

Examples: for a 6 millimetre fillet weld there should be a 6 millimetre leg length and a 4.2 millimetre throat thickness.

for a butt weld there should be an even curved reinforcement slightly above the alignment of the parent metals.

Where the size of the weld is not specified the deposit should be in proportion to the plate thickness, for example on 10mm plate a 10mm fillet weld.

Butt welds should always be built up so that the weld section is at least equal to the thickness of the parent metal.

The assembly of parts for fillet welds also influences weld size. The parts should be close fitting so that there is fusion over the required area of the joint surfaces. In the diagram below there is a gap between the parts. The weld size is correct but the effective throat thickness is reduced.

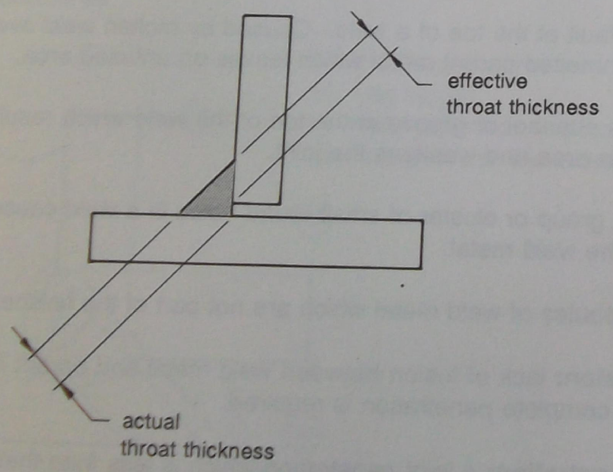

6. Fillet weld dimensions

The size of a fillet weld is determined by the following dimensions which are checked with a weld gauge.

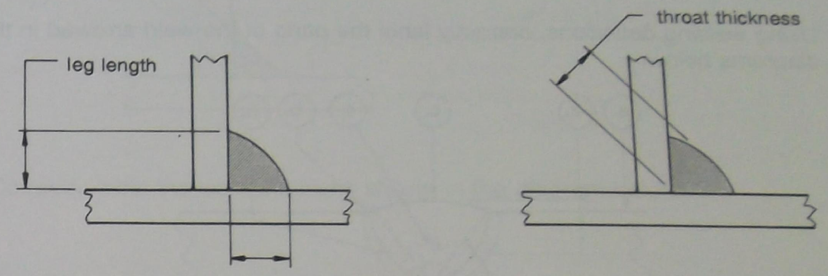

Note: The strength of the weld is determined by the effective throat thickness which for a mitre fillet should be 0.707 or 70% of the leg length.

Convex

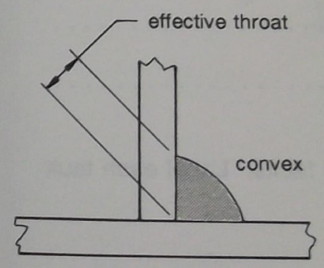

Mitre fillet

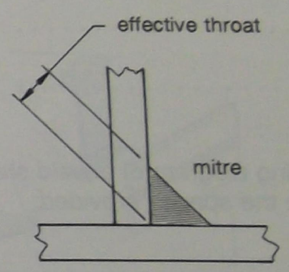

Concave fillet

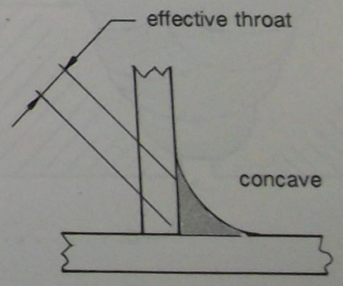

Removing welding fumes using
a portable extractor system



Section 4: Fillet weld single run - horizontal

Task: To deposit single run fillet welds on low carbon steel plate in the horizontal position. This section covers part of learning outcome 3 of the National Module Descriptor.

Why? So you'll have the skills to deposit single run fillets in the horizontal position as required by industry.

To pass: This is a skill practice exercise which is not assessed as part of this module. However you should try to reach the standards specified on the work sheet for this section as you'll use the skills you learn for later exercises that are formally assessed.

DANGER

Safety

- Follow OH&S workshop procedures at all times. Your teacher will tell you what they are.
- Accidents happen more often in untidy workshops - clean up when you've finished a job.
- Always use adequate ventilation to remove harmful fumes.

PROCEDURE SHEET

SECTION 4: FILLET WELD - SINGLE RUN - HORIZONTAL							
Sketch							
Machine type:							
		Control data					
Run	Wire speed	Amperage reading	Voltage control	Voltage reading	Transfer mode		
1							
2							
3							
4							
Electrode wire Size Ømm: Type: Classification:			Material data Type: Thickness:				
Shielding gas Type: Flow rate: Litres/min:			Weld time Start: Finish: Units completed:				
Assessment	Complies	Doesn't comply					
Alignment and assembly							
Angular distortion							
Surface finish							
Weld size							
Surface defects							
Complete fusion							
Root penetration							
Undercut							
Name		Exercise No.					

SECTION 4: FILLET WELD - SINGLE RUN - HORIZONTAL

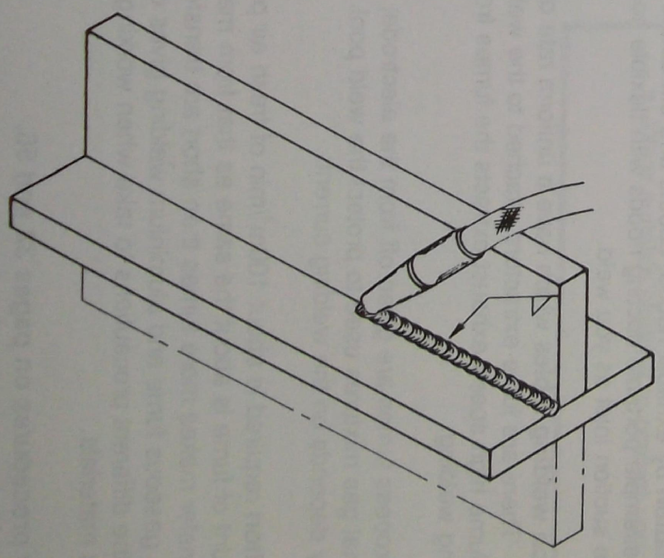

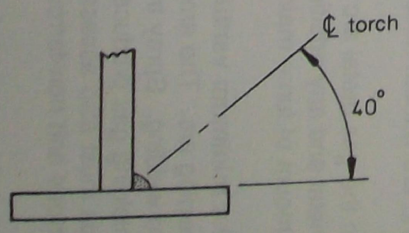

IF IN DOUBT ASK YOUR TEACHER

OBJECTIVE To develop the skills of electrode manipulation necessary to deposit a 6mm fillet weld to the requirements below

POSITION Horizontal

PROCEDURE Your teacher will demonstrate

METHOD

1. Wire brush the material to remove surface rust and loose mill scale
2. Tack both ends of the plate to ensure metal to metal contact
3. Complete about half the weld and examine appearance and profile before finishing the weld
4. Remove spatter and submit your exercise for inspection
5. Break the weld and resubmit your exercise for internal inspection
6. Relocate the plates for further practice using two new edges
7. Evaluate your weld exercise and complete the weld procedure sheet
8. Submit your work for assessment

REQUIREMENTS

- correct alignment and assembly
- smooth regular weld contour
- angular distortion 0° to 5°
- a maximum of two significant weld defects per 250mm (or 225mm plate) of weld length with an accumulative area of less than twice the square of the plate thickness
- weld size 6^{+2}_{-0} mm
- complete fusion for the length of the weld joint
- undercut to be no greater than 1.5mm per 50% of the joint length

MATERIAL 2 pieces 75 x 6 x 225mm low carbon steel plate

UNIT 1

ECONOMY Consumables and materials are expensive - relocate plates as shown for maximum use

SECTION 4: FILLET WELD - SINGLE RUN - HORIZONTAL

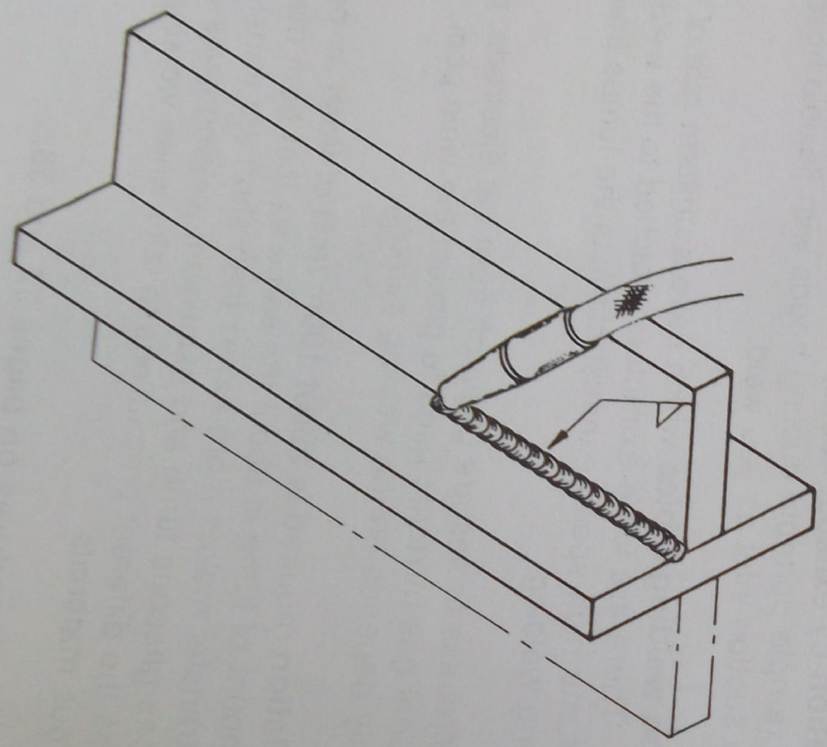

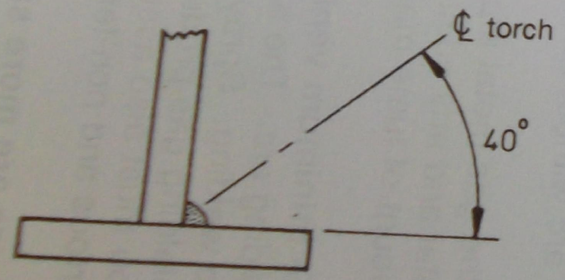

IF IN DOUBT ASK YOUR TEACHER

OBJECTIVE To develop the skills of electrode manipulation necessary to deposit a 6mm fillet weld to the requirements below

POSITION Horizontal

PROCEDURE Your teacher will demonstrate

METHOD

1. Wire brush the material to remove surface rust and loose mill scale
2. Tack both ends of the plate to ensure metal to metal contact
3. Complete about half the weld and examine appearance and profile before finishing the weld
4. Remove spatter and submit your exercise for inspection
5. Break the weld and resubmit your exercise for internal inspection
6. Relocate the plates for further practice using two new edges
7. Evaluate your weld exercise and complete the weld procedure sheet
8. Submit your work for assessment

REQUIREMENTS

- correct alignment and assembly
- smooth regular weld contour
- angular distortion 0° to 5°
- a maximum of two significant weld defects per 250mm (or 225mm plate) of weld length with an accumulative area of less than twice the square of the plate thickness
- weld size 6^{+2}_{-0} mm
- complete fusion for the length of the weld joint
- undercut to be no greater than 1.5mm per 50% of the joint length

MATERIAL 2 pieces 75 x 6 x 225mm low carbon steel plate

UNIT 1

ECONOMY Consumables and materials are expensive - relocate plates as shown for maximum use

Safety procedures for gas metal arc welding: Part 2



- The welding area should be **properly ventilated** and free from drafts that might affect the welding arc and shielding gas. Carbon tetrachloride, trichlorethylene or other chlorinated hydrocarbons should not be used for cleaning aluminium alloys before welding. Acetone and alcohol are recommended chemical cleaners but make sure surfaces are dry before welding. Do not weld in any area where there are fumes from such solvents.

- Do not weld near flammable or combustible materials. Degreasing aluminium alloys with acetone or other flammable solvents in a badly ventilated welding area creates a fire hazard.

- When gas metal arc welding with pure argon, ozone (O_3) is formed. Certain wavelengths of ultraviolet light emitted from the arcs produce O_3 at a high rate by transforming oxygen (O_2) to ozone (O_3). When welding aluminium and stainless steel in confined spaces, the reflecting metal surfaces can intensify the ultraviolet radiation. You should wear a **respirator** to protect you from toxic ozone.

- Natural ventilation may not be enough to control fumes when welding galvanised materials in confined spaces. You will need mechanical ventilation which can be:

General exhaust fans which help to reduce and dilute background fumes in the work area and direct fumes away from the operator.

Local exhaust ventilation by exhaust hoods, booths and extractors close to the fume source, for example portable ducting hoods with flexible hoses so that you can reposition the suction inlet as you weld.

Down draft ventilation welding tables which have a uniform rate of exhaust across the grille face. There are fume extractors attached to the welding gun near the arc. Low volume high speed exhaust extracts the fumes from around the arc without affecting welding.

In the gas metal arc process fumes are given off from the electrode, parent metal and any additional gas mixtures used to protect the weld pool. The amount of fume mainly depends on the welding current.

The **minimum ventilation** required is about 100m^2/min of fresh air per active welding arc. The amount of fume is about the same as that from manual metal arc welding. Spray transfer makes more fumes than short arc transfer. The shielding gas produces gaseous fume and aluminium welding gives off ozone. You must also assess the different precautions to take when working with ferrous and non-ferrous materials.

There are more safety procedures on pages 32 and 56.

TAFE

Section 5: Fillet weld - 3 run 2 layer - horizontal

Task: To deposit a multiple run horizontal fillet on low carbon steel plate in the horizontal position. This section covers part of learning outcome 3 of the National Module Descriptor.

Why? So you'll have the skills to deposit multiple run fillets in the horizontal position as required by industry.

To pass: This is a skill practice exercise which is not assessed as part of this module. However you should make every effort to reach the standards specified. The skills you learn in this section are used for later exercises that are formally assessed.

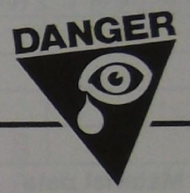

Safety

- Use an appropriate shade filter to protect your eyes
- Wear suitable clothing to protect your body

TAFE

PROCEDURE SHEET

SECTION 5: FILLET WELD - 3 RUN 2 LAYER - HORIZONTAL						
Sketch						
Machine type:						
		Control data				
Run	Wire speed	Amperage reading	Voltage control	Voltage reading	Transfer mode	
1						
2						
3						
4						
Electrode wire				Material data		
Size Ømm:				Type:		
Type:				Thickness:		
Classification:						
Shielding gas				Weld time		
Type:				Start:		
Flow rate: Litres/min:				Finish:		
				Units completed:		
Assessment		Complies		Doesn't comply		
Alignment and assembly						
Angular distortion						
Surface finish						
Weld size						
Surface defects						
Complete fusion						
Root penetration						
Undercut						
Name				Exercise No.		

SECTION 5: FILLET WELD - 3 RUN 2 LAYER - HORIZONTAL

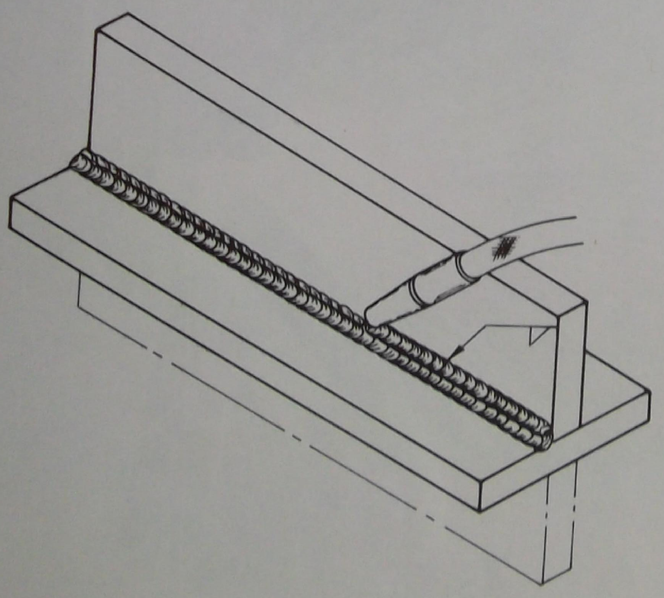

IF IN DOUBT ASK YOUR TEACHER

OBJECTIVE To deposit a 3 run 2 layer fillet weld on low carbon steel using the gas metal arc welding process to the requirements listed below

POSITION Horizontal

PROCEDURE Your teacher will demonstrate

METHOD

1. Set welding conditions and trial on scrap material
2. Wire brush the material to remove rust and loose scale
3. Assemble and tack weld both ends, ensuring metal to metal contact
4. Maintaining correct stickout and torch angle, deposit the first run
5. Critically examine the bead profile before placement of the second and third runs
6. Break the exercise and relocate for further practice
7. Flame cut and reposition for further practice
8. Evaluate your weld exercise and complete the procedure sheet

REQUIREMENTS

- correct alignment and assembly
- smooth regular weld contour
- angular distortion 0° to 5°
- a maximum of two significant weld defects per 250mm (or 225mm plate) of weld length with an accumulative area of less than twice the square of the plate thickness
- weld size 10^{+2}_{-0} mm
- complete fusion for the length of the weld joint
- undercut to be no greater than 1.5mm per 50% of the weld length

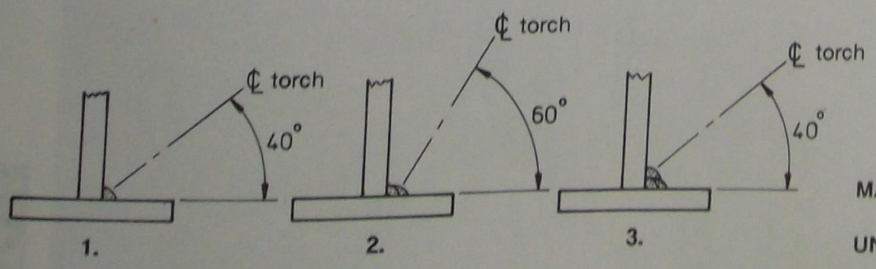

Layer sequence

MATERIAL 2 pieces 75 x 10 x 225mm low carbon steel plate

UNITS 3

ECONOMY Return all unused material to the store

SECTION 5: FILLET WELD - 3 RUN 2 LAYER - HORIZONTAL

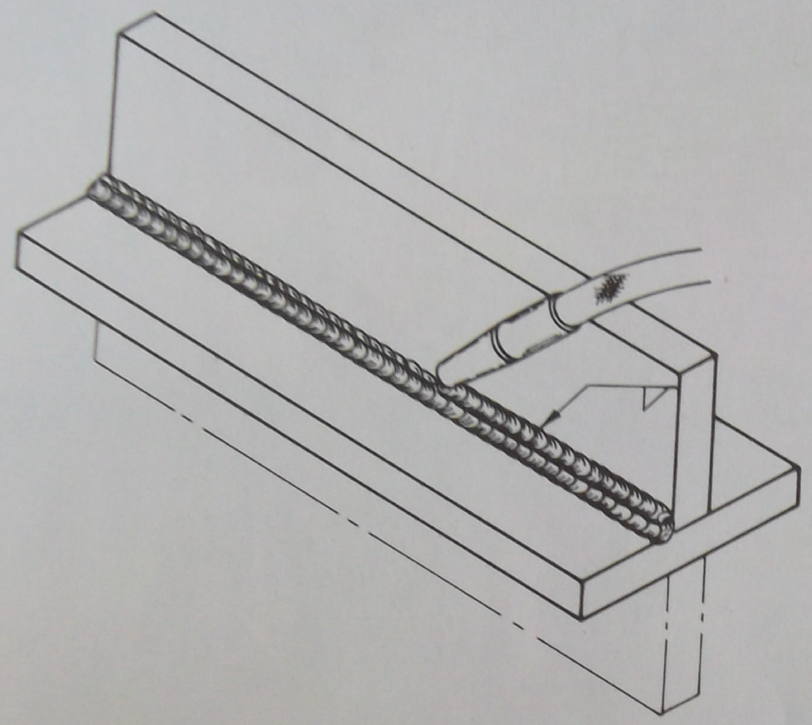

IF IN DOUBT ASK YOUR TEACHER

OBJECTIVE To deposit a 3 run 2 layer fillet weld on low carbon steel using the gas metal arc welding process to the requirements listed below

POSITION Horizontal

PROCEDURE Your teacher will demonstrate

METHOD

1. Set welding conditions and trial on scrap material
2. Wire brush the material to remove rust and loose scale
3. Assemble and tack weld both ends, ensuring metal to metal contact
4. Maintaining correct stickout and torch angle, deposit the first run
5. Critically examine the bead profile before placement of the second and third runs
6. Break the exercise and relocate for further practice
7. Flame cut and reposition for further practice
8. Evaluate your weld exercise and complete the procedure sheet

REQUIREMENTS

- correct alignment and assembly
- smooth regular weld contour
- angular distortion 0° to 5°
- a maximum of two significant weld defects per 250mm (or 225mm plate) of weld length with an accumulative area of less than twice the square of the plate thickness
- weld size 10^{+2}_{-0} mm
- complete fusion for the length of the weld joint
- undercut to be no greater than 1.5mm per 50% of the weld length

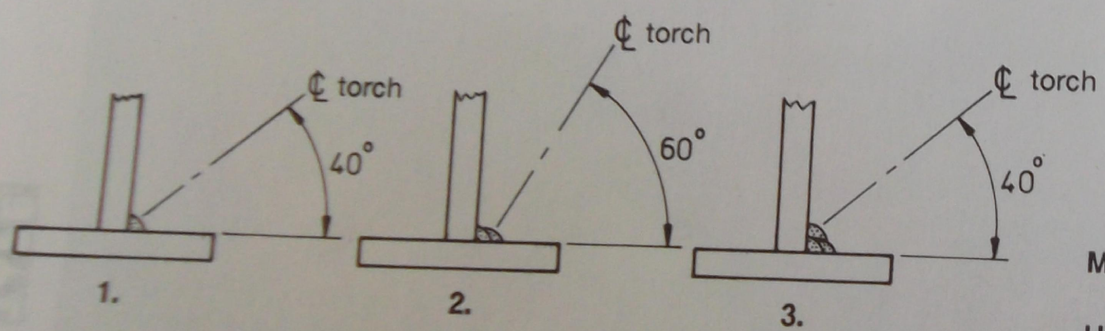

Layer sequence

MATERIAL 2 pieces 75 x 10 x 225mm low carbon steel plate

UNITS 3

ECONOMY Return all unused material to the store

TAFE

Depositing a fillet weld in the horizontal position



Section 6: Fillet weld - angle to plate - horizontal

Task: To deposit multiple run fillet welds on low carbon steel angle to plate in the horizontal position. This section covers part of learning outcome 3 of the National Module Descriptor.

Why? So you'll be able to fillet weld flat and rolled steel structural sections in the horizontal position as required by industry.

To pass: You'll be expected to safely deposit a multiple run fillet weld on low carbon steel plate and angle section in the horizontal position to the specifications on the work sheet for this section.

DANGER

Safety

- Follow OH&S workshop procedures at all times. You teacher will tell you what they are.
- Untidy workshops can cause accidents. Make sure you clean up when you've finished a job.

PROCEDURE SHEET

SECTION 6: FILLET WELD - ANGLE TO PLATE - HORIZONTAL						
Sketch						
Machine type:						
	Control data					
Run	Wire speed	Amperage reading	Voltage control	Voltage reading	Transfer mode	
1						
2						
3						
4						
Electrode wire Size Ømm: Type: Classification:				Material data Type: Thickness:		
Shielding gas Type: Flow rate: Litres/min:				Weld time Start: Finish: Units completed:		
Assessment	Complies				Doesn't comply	
Alignment and assembly						
Angular distortion						
Surface finish						
Weld size						
Surface defects						
Undercut						
Name					Exercise No.	

TAFE

April 1991

SECTION 6: FILLET WELD - ANGLE TO PLATE - HORIZONTAL

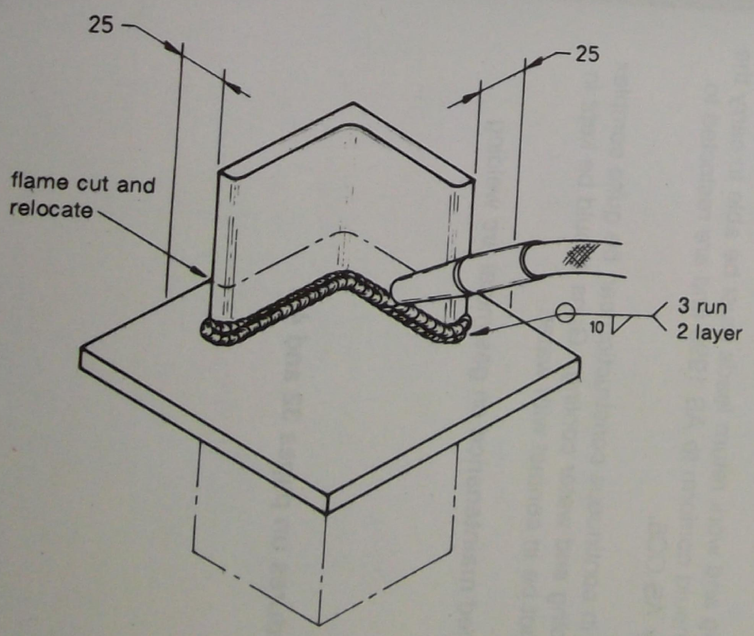

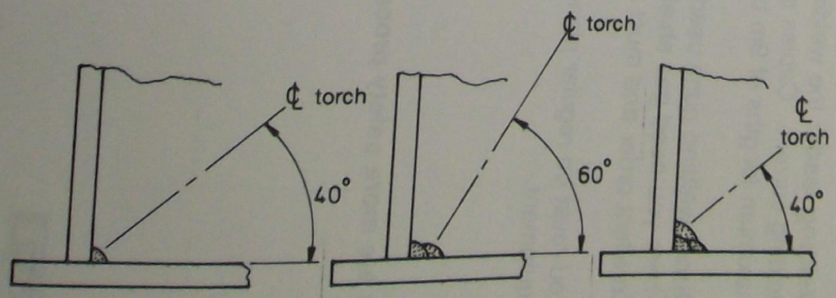

weld-layer sequence

IF IN DOUBT ASK YOUR TEACHER

OBJECTIVE Deposit a 3 run 2 layer fillet weld using the gas metal arc welding process on angle section to plate

POSITION Horizontal

PROCEDURE Your teacher will demonstrate

METHOD

1. Assemble and tack weld the angle section to plate
2. Establish a weld procedure and finalise the first run
3. Submit the assembly for inspection
4. Using a three run, two layer technique complete the weld and submit for inspection
5. Mark out and flame cut the angle section to allow for further practice
6. Relocate the section on the opposite side of the plate and repeat the exercise
7. Evaluate your weld exercise and complete the weld procedure sheet
8. Submit your work for assessment

REQUIREMENTS

- correct alignment and assembly
- smooth regular weld contour
- angular distortion 0° to 5°
- a maximum of two significant weld defects per 250mm of weld length with an accumulative area of less than twice the square of the plate thickness
- weld size 10^{+2}_{-0} mm
- undercut to be no greater than 1.5mm per 50% of the weld length

MATERIAL 1 piece 150 x 10 x 150mm low carbon steel plate
1 piece 75 x 75 x 10mm ASEA

UNITS 2

ECONOMY Return unused material to the store
Cut angle and reposition to gain maximum use from material