To seal off an internal DG:

- Remove the existing grating.
- Insert and secure a suitable length of approved 100 mm pipe into the grating socket of the DG.
- Seal off this pipe top at floor level with a removable 100 mm screwed plug.

Venting of the DG is done by means of a 50 mm vent pipe as follows:

- Connect the vent pipe to the level inlet, or approved fitting, and extend it vertically to its terminal vent cowl.
- Connect the vent pipe to the level inlet, or approved fitting, and finish it at a grate fitted flush with an external wall.
- Connect it to the riser at 45° and extend it vertically to a vent cowl.

Depending on wall location, this vent may also finish at a grate fitted flush with an external wall.

NOTE:

Sealed disconnector gully assemblies for internal installations are permitted, but all major Authorities discourage their installation.

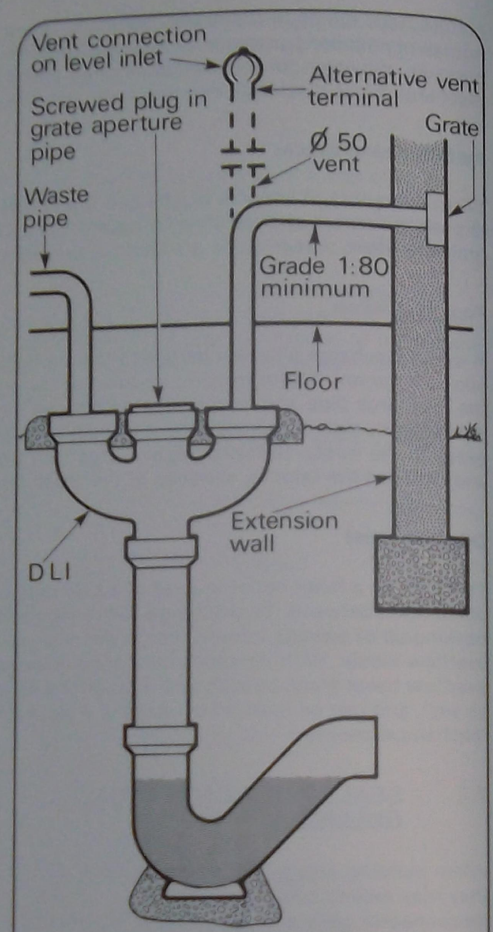

INTERNAL SEALED-OFF DG

7.4 PUMPED DISCHARGES

There are situations where waste and soil discharges do not enter the sewer by gravity, but must be forced into it by pumping or other means, such as compressed air. Such installations are subjet to strict regulations and must be approved by the Sewerage Authority. It is outside the scope of this manual to deal with the details of such installations. Only the discharge of waste, as it affects the connection of waste pipes to the DG is described here.

Pumped discharges are conveyed through pipes to a DG. The waste pipe work must comply with the following requirements:

- Installed or looped at least 150 mm above the overflow level of the disconnector gully and discharging into a level inlet fitting, as shown.

  – The overflow level is, of course, the level of the riser pipe grate.

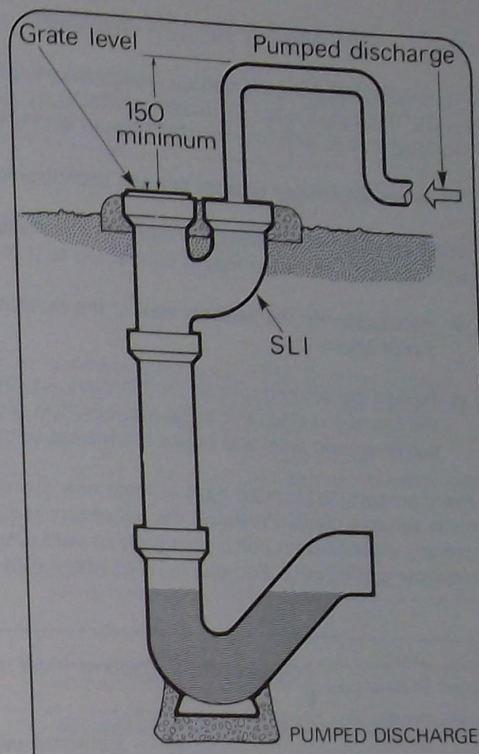

PUMPED DISCHARGES

EXTERNAL DG INSTALLATION
WASTE CONNECTION INTO SLI

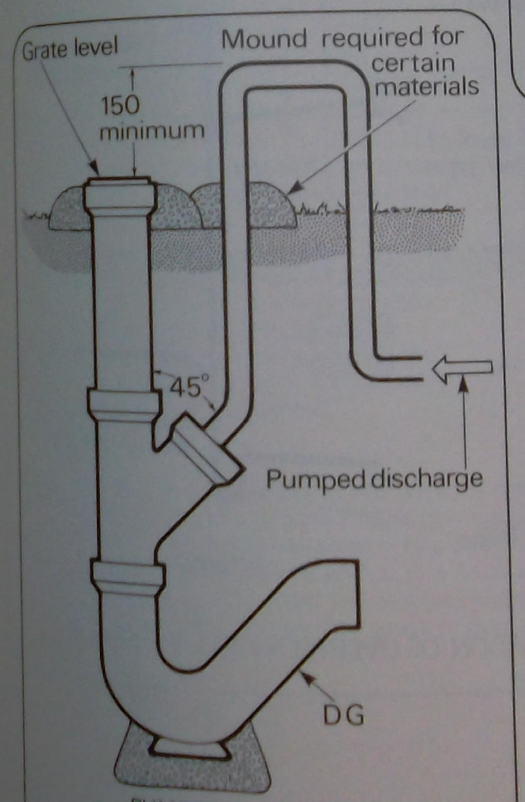

PUMPED DISCHARGES

EXTERNAL DG INSTALLATION
WASTE CONNECTION BELOW GROUND

- The junctions of a waste pipe to a DG riser must be made at 45° by means of a suitable fitting (e.g. a junction or a saddle) appropriate to the material of the riser pipe, as shown.

7.5 OVERFLOW RELIEF GULLIES

To prevent surcharge (backflow = excessive loading in sewer) due to infiltration by rain, broken pipes, blockages, etc., an overflow relief gully must be provided. It is designed to prevent this surcharge from entering fixtures located within the house.

Maximum protection against sewage backflow (surcharge) must be ensured by proper positioning.

Where the overflow relief gully cannot be installed in a suitable open area, a disconnector gully with at least one waste fixture connected to it must be installed in either of the following ways:

- Recessed into the external wall of the building and leaving 300 mm (minimum) clear working space above it.
- Placed inside the building. In this case, as for internal gullies, a removable plug must seal off the top of the riser and a 100 mm overflow pipe discharging to open air fitted to the levels above ground level and below the lowest fixture outlet, as shown.

Every property drain must have at least one overflow relief gully installed in the system at the most suitable place. Providing the necessary requirements can be complied with, it is possible to use any disconnector gully, yard gully or yard disconnector for the purpose, provided an approved overflow grating (e.g. 'Pop-up') is fitted instead of the normal one on the surface fitting.

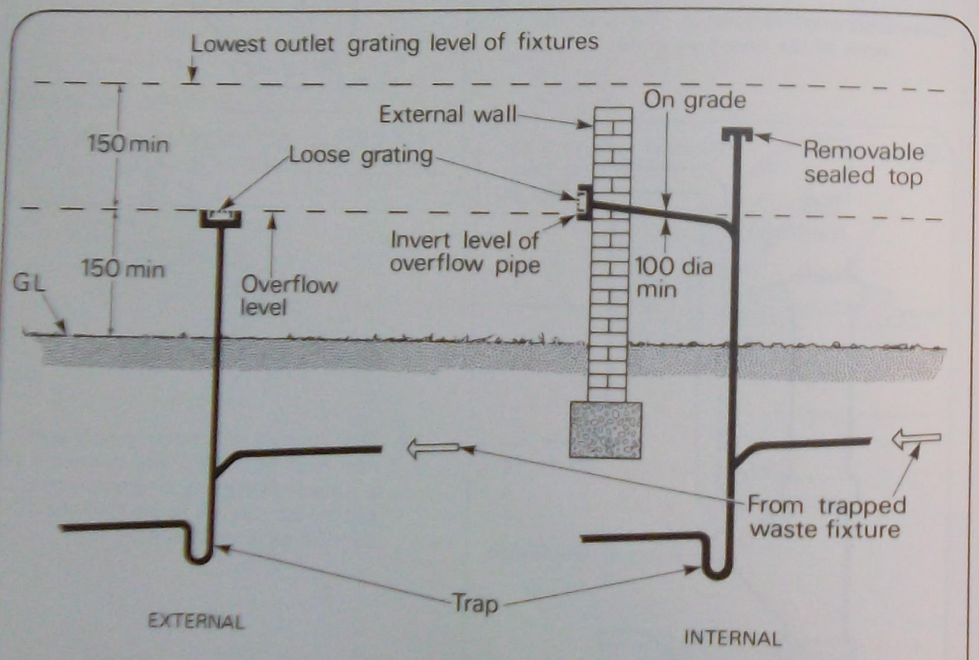

DIAGRAMS OF INSTALLATION OF OVERFLOW RELIEF GULLIES

In locating the relief gully, the main points to be observed are:

- There must be adequate external surface drainage area away from the surface fitting.
- The overflow level of the fitting must be:
  - At least 150 mm above the finished ground level.
  - Preferably 150 mm (minimum) below the outlet level of the lowest fixture in the drainage system.

NOTE:

Where it is not possible or practicable to install an overflow relief gully in the drainage system, it may be possible to install a reflux valve instead (Refer Section 5.1.7). This valve must be installed as close as possible to the sewer connection point and downstream of a BT, if it is fitted. If, in the opinion of the approving officer, the fixtures connected to the branch drain are insufficiently protected against backflow of sewage in that drain, a reflux valve must be fitted at the lower end of any such branch drain.

7.6 GRADIENT

Stranding (silting) of drain pipes is caused by deposition of suspended solid matter in the waste carried by the drain. It is essential for the drain to have sufficient gradient or fall to prevent stranding. The gradient ensures that the velocity of the liquid waste, passing through the pipe, is sufficient to carry away solid matter and produce a self-cleaning action in the drain. The gradient depends on the diameter of the pipes used in the drain. For example, 150 mm diameter pipes require a minimum gradient of 1 in 80, whilst 100 mm diameter pipes require a gradient of not less than 1 in 60.

Depending on conditions, steeper grades are sometimes used, but these are specified on approved drawings or by the Sewerage Authority. (Refer to Section 10.8 of the National Code for correct installation.

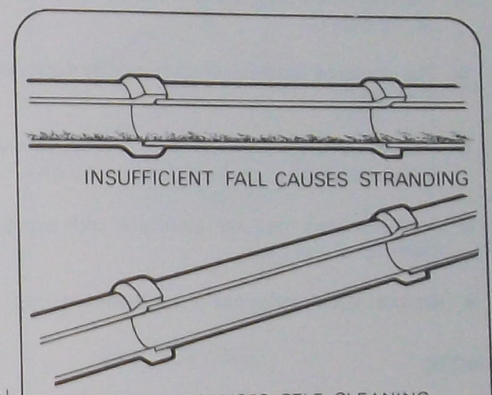

EFFECTS OF GRADIENTS

A most important requirement in the laying of drain pipes is that 'Each straight section of a drain must be laid on an even grade'. This is obvious to ensure properly sealed pipe joints. An uneven grade will not allow proper alignment of pipes or proper abutment of spigots into socket faces. Where gradients are steeper than 1:5, it is necessary to construct anchor blocks to prevent pipes sliding down the trench slope. The anchor blocks are cast on the spot, using a 1:2:4 mortar mix made with 14 mm screenings. The block is cast around a short, straight pipe at the selected location.

7.6.1 Anchor blocks

The following requirements apply:

- At the prescribed spacing for the anchor blocks, the trench must be excavated across, so that the concrete block will be set at least 150 mm below the level of the trench surface and also excavated into the side of the trench to a minimum of 150 mm into each side and to the full width of the block (min. 150 mm).

NOTE:

Check with your own Sewerage Authorities for any variations in sizes. (May have to be longer along the line of the drain.)

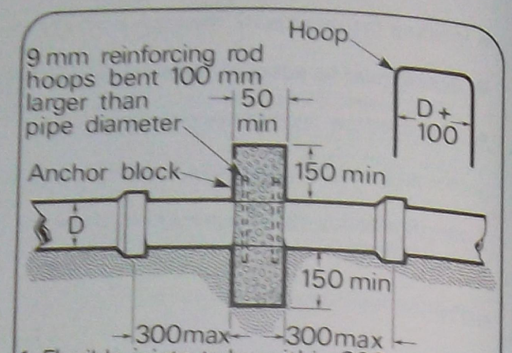

1. Flexible joints to be within 300 mm of concrete block
2. Block to be clear of flexible joints
3. Block to extend full width of trench

ANCHOR BLOCKS

- The top of the pipe barrel must be covered with at least 150 mm of concrete for the full width of the block.
- The distance between anchor blocks must not exceed 10 m and be as required by the Authority.
- The bends or junctions at the top or bottom of the inclined sections of drains must be anchored also by approved anchor blocks.
- Anchor blocks must be reinforced with two 9 mm reinforcing rods bent 100 m larger than the diameter of the pipe.
- Anchor blocks must not cover flexible joints.

NOTE:

In very wet ground, drain pipes of some 50 mm bore should be set in the concrete anchor block to allow water to drain from upstream of the blocks at trench bottom level to downstream of the blocks.

7.6.2 Jump-ups

All jump-ups must be constructed of approved materials depending on the nature of the soil and in conjunction with the approving Authority. The stack is also supported at its base on concrete in the same way as is done with disconnector gullies or similar types of fittings.

< STEEP GRADIENT Avoiding. STACK >

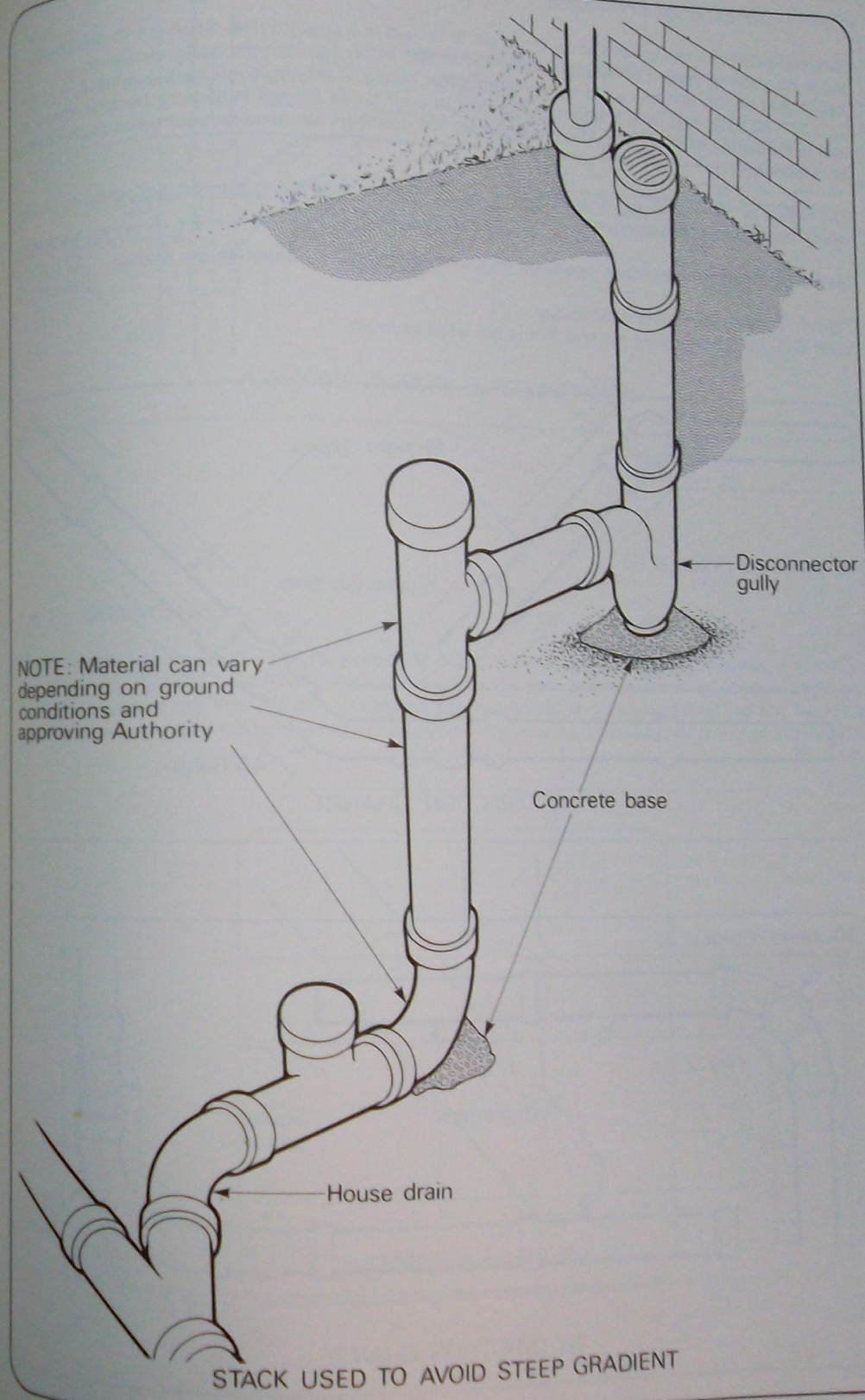

STACK USED TO AVOID STEEP GRADIENT

7.7 DIRECTION CHANGES

Site conditions do not always allow the drain to be laid in a straight line. Changes in direction must be made by means of bends, usually 45° or 90°, either left- or right-hand. However, depending on the material used for the drain, other bends of varying angles are available, e.g. 5°, 15°, 30°, 60°, 75° and 88½°. Although the flow through these fittings is usually smooth, there is still a possibility of stranding. Therefore, inspection openings are usually required at each change of direction.

The radius of the directional change should be as large as possible to prevent a slow-down in flow which could cause stranding.

Methods of placing inspection openings on drains at changes of direction are shown.

Type A is more commonly used to-day.
Type B is still an accepted method, but is not used as much.

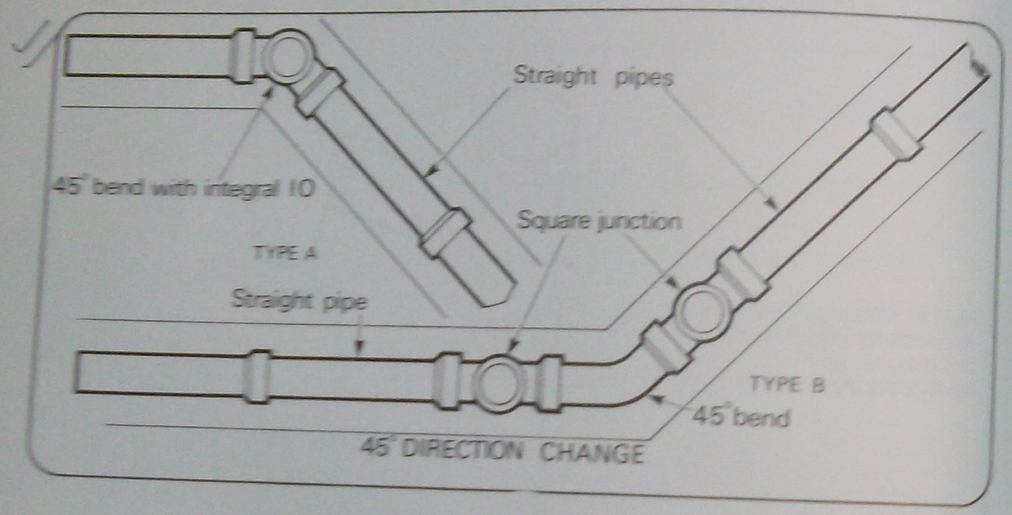

45° DIRECTION CHANGE

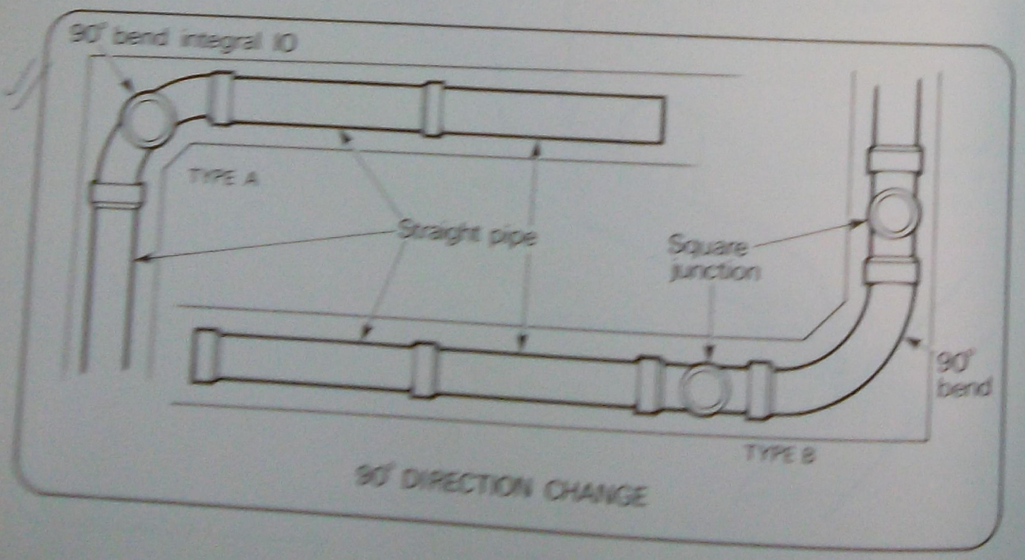

90° DIRECTION CHANGE

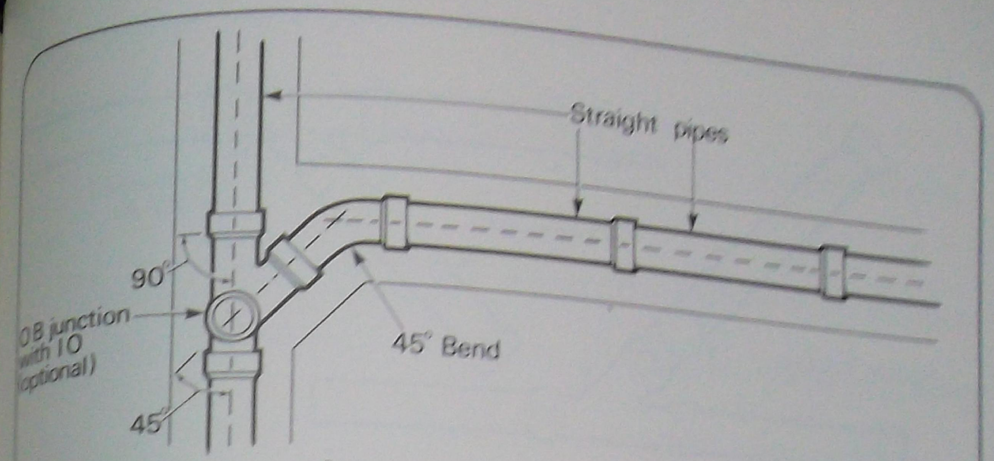

A 45°/90° CHANGE IN CONNECTION

7.8 BRANCHES

When a branch is made in a house, a property drain, in a main or a reticulation sewer, it is made in such a way that the flow from the branch drain to the main drain enters at an oblique angle and in the direction of the flow. Failure to observe this requirement will cause splashing and backflow, leading to solid matter being deposited and eventually causing a blockage at the branch junction.

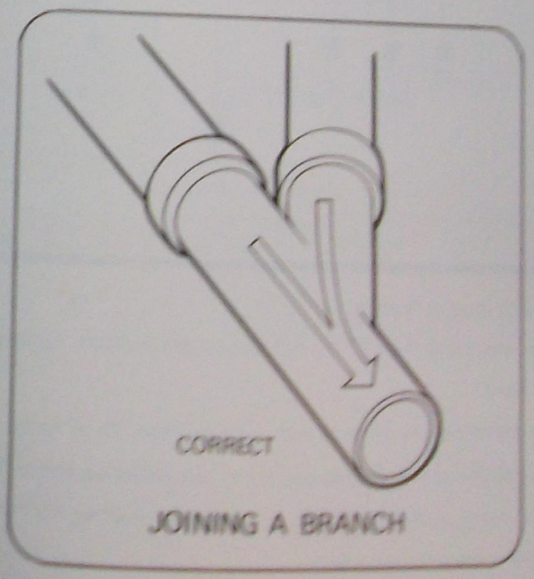

JOINING A BRANCH

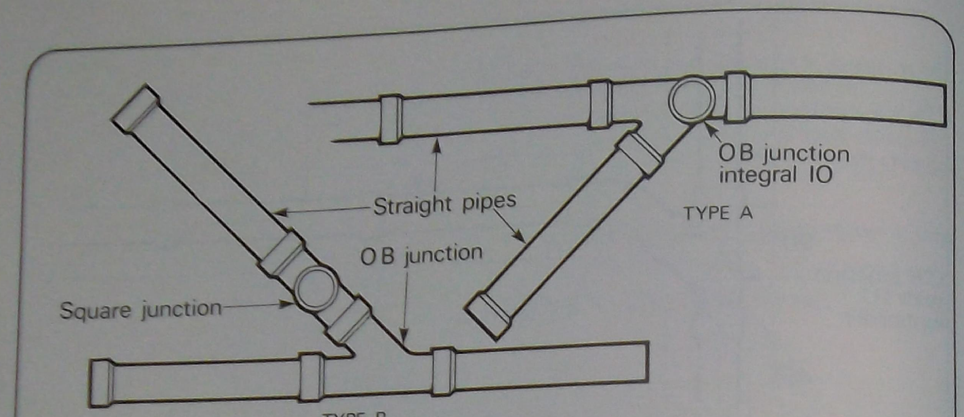

45° OBLIQUE (OB) BRANCH CONNECTION

7.9 INSPECTION

As most pipes and fittings of a house drain are laid underground, provision must be made in the design for the inspection, testing and cleaning of the system. Inspection openings are incorporated in certain fittings; placed in the line of drain, they are sealed up and remain underground. Other inspection openings are carried up to the surface level to comply with the National Code or the appropriate Authority. Other ways of inspection are by means of inspection chambers placed at the intersection of two or more drains. All these methods are used where blockages may occur or to comply with the regulations.

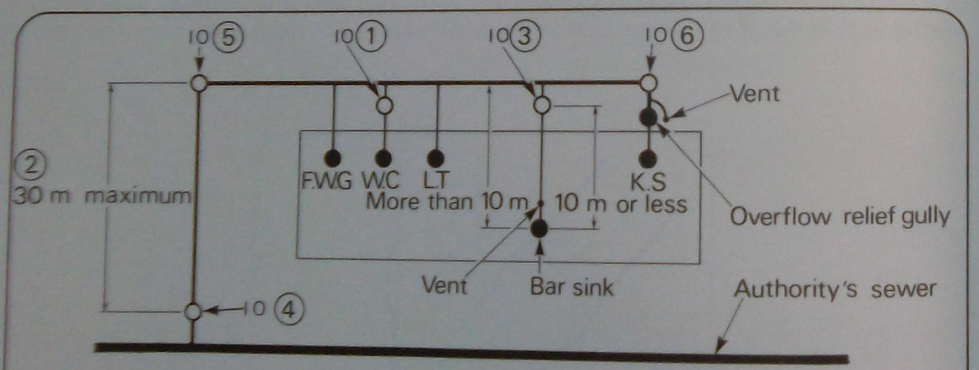

1. On each W.C. or slop hopper branch.
2. At each interval of not more than 30 m, and where practicable, located on, or, immediately downstream of a bend.
3. Within 10 m of a waste fixture if the branch is more than 10 m long.
4. At the connection to the authority's sewer, if not provided by the authority.
5. Where required for locating drains, on the first bend exceeding 45° in the property drain upstream of the sewer connection point.
6. At not more than 10 m from the upstream end of any drain.

PROVISION OF INSPECTION OPENINGS FOR MAINTENANCE PURPOSES

7.9.1 Inspection openings

Maintenance

Except where inspection chambers are installed, inspection openings for maintenance purposes must be provided in the cases listed below.

- On each W.C. or slop hopper branch.
  - The Authority may approve alternative access provisions for the maintenance of groups of W.C.s discharging to drains under buildings.
- At intervals of not more than 30 m, and where practical, located on or immediately downstream of a bend.
- At the connection to the Authority's sewer, if an inspection opening is not provided by the Authority.
- Where required by the Authority for locating drains on the first bend exceeding 45° on the property drain upstream of the sewer connection point.
- At not more than 10 m from the upstream end of any drain.
- Where required by Section 10.2 of the National Code.

Visual inspection

Where specified by the Authority, inspection openings for visual inspection purposes must be provided. These are usually installed at the locations listed below.

- At the connection to the Authority's sewer, if an inspection opening is not provided by the Authority.
- At each end of any straight run of drain.
- At even spacings of not more than 30 m along the drain.
- On inclined jump-ups, the length of which exceeds 3 m, and provided that its length does not exceed 6 m, only one inspection opening is required to be located centrally on the jump-up.
- On every W.C. branch drain, except when a 100 mm opening is provided in an accessible position on the W.C. discharge pipe.
- On every 100 mm, or larger branch drain, the length of which exceeds 3 m, and provided that its length does not exceed 6 m, only one inspection opening is required to be located centrally on the branch drain.
- At the off-take of any branch drain, if such a branch drain is not installed and tested concurrently with the main drain.

NOTE:

Inspection openings may be required in other places by different Sewerage Authorities.

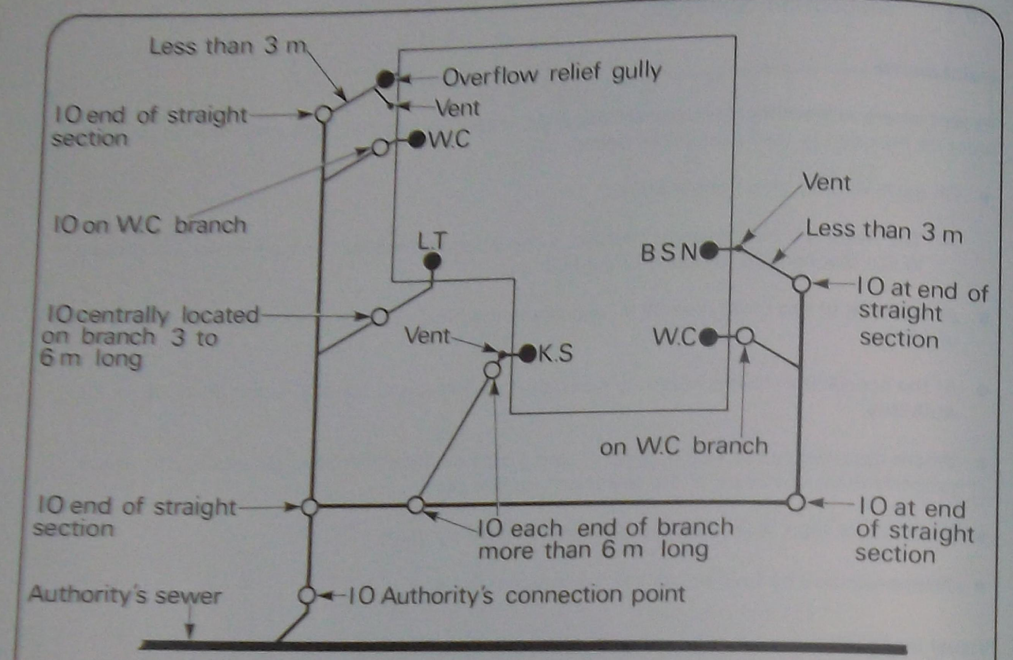

PROVISION OF INSPECTION OPENINGS FOR VISUAL INSPECTION PURPOSES

NOTE:

In general, IO means an opening in a pipe or a fitting, sealed with a removable plug or a cover which enables access for inspection, maintenance and testing. An inspection opening provided with the means of inserting a testing plug to carry out a hydrostatic test is referred to as a 'testing opening'. In drains, IOs and testing openings are generally of the same size.

After inspection and final testing of a drainage system, the inspecting openings are sealed off in the approved manner, as shown.

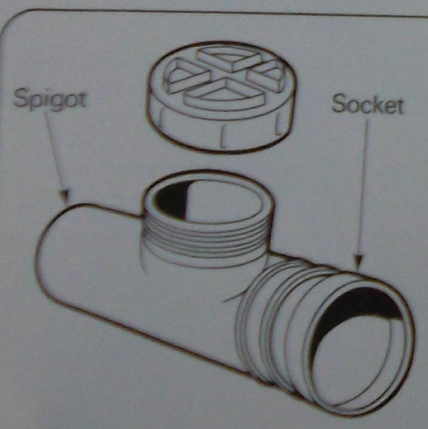

SEALING OF IO IN UPVC

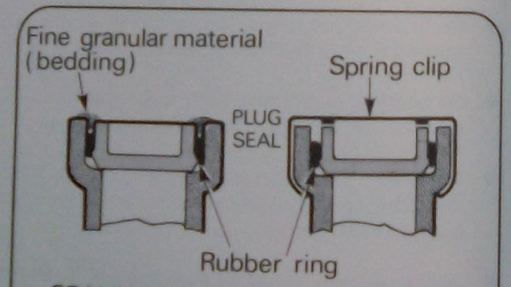

SEALING OF INSPECTION OPENINGS

The materials can be VC, UPVC, cast iron and fibrous reinforced cement. Each State may use some or all of these materials.

NOTE:

All these types of IO are not necessarily used in every State. Check with the appropriate Authority.

7.9.2 Inspection chambers

Complex or deep drain systems often incorporate inspection chambers. The chambers can have walls of brickwork on a concrete floor base, or they can be made entirely of concrete poured in situ; some are made of spun, reinforced concrete pipes with a wall thickness of at least 60 mm. The size and constructional details of such chambers are set out clearly in the following section.

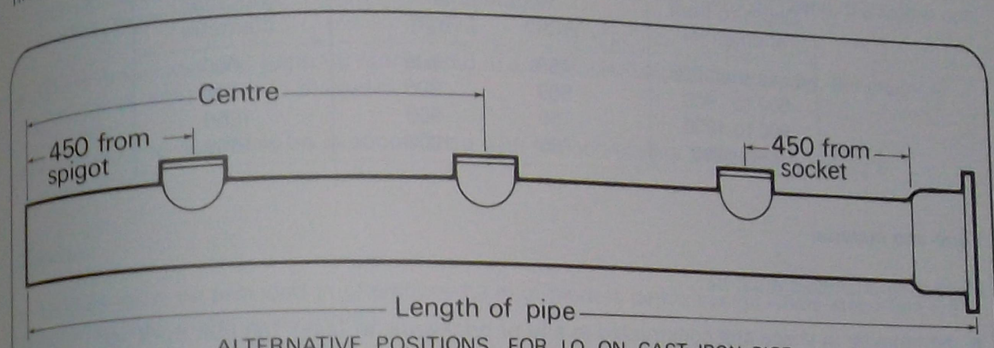

ALTERNATIVE POSITIONS FOR IO ON CAST IRON PIPE

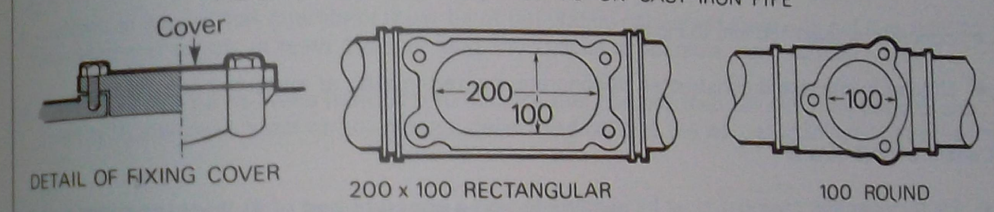

DETAIL OF FIXING COVER — 200 x 100 RECTANGULAR — 100 ROUND

TESTING OPENINGS FOR 100 mm DIAMETER PIPE IN C I

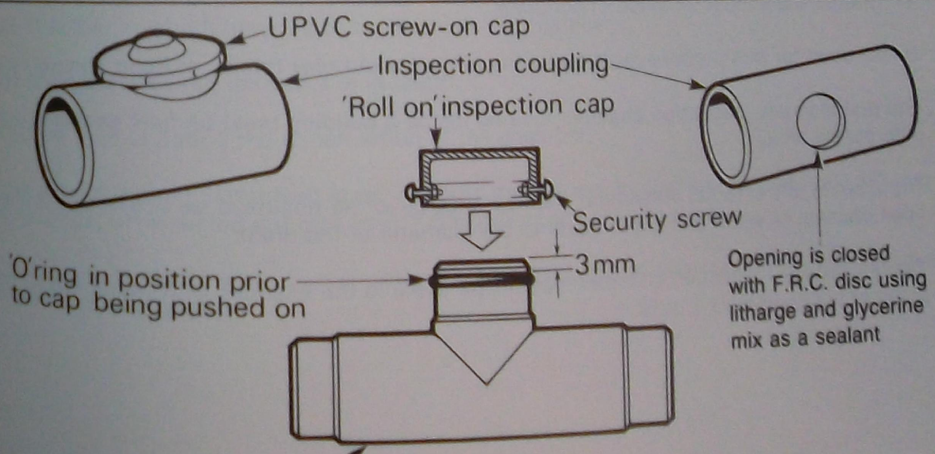

CLOSING IO'S IN F.R.C.

Provision

Inspection chambers must be installed where directed by the appropriate Sewerage Authority and may be used instead of inspection openings.

Size of inspection chambers

Inspection chambers must be of the size specified in the table below:

MINIMUM INTERNAL MEASUREMENTS (mm)			
Depth to floor of chamber	Rectangular Width	Length	Circular diameter
Less than 600	450	600	600
600 to 900	600	900	900
900 to 1200	750	900	1050
Over 1200	750	1200	1050

Form and material

Inspection chambers must be:

- rectangular in shape and constructed in situ of brickwork, at least 190 mm thick; or
- concrete at least 150 mm thick; or
- circular in shape and constructed of concrete, poured in situ, at least 150 mm thick.

Constructional details

- Each inspection chamber must be constructed on a concrete bed of at least the same external dimensions as the chamber and at least 150 mm thick.
- Chamber walls of brickwork must not exceed 1.5 m in depth, measured from surface level of invert of channel.
  - — Deeper walls must be made of concrete.
- Bricks used for this purpose must be first quality pressed clay bricks, or solid concrete blocks.
- The drains in any inspection chamber located inside a building must be fully enclosed and incorporate an IO.
- The drain in any external inspection chamber may be either enclosed, as above, or may be an open channel of width and depth equal to the diameter of the drain.
- The floor in any inspection chamber must slope towards the channel, or towards the IO on a grade of approximately 1 in 12.

- Formed junctions and bends in channels must have a centre line radius of not less than 300 mm.
- A fall of at least 30 mm must be provided in the invert of every channel which curves through 45° or more.
- A fall of at least 15 mm must be provided in the invert of every straight channel.

Jump-ups in inspection chambers

- Each jump-up in an inspection chamber must be of cast iron, UPVC, F.R.C. or of other approved material, securely clipped to the wall and terminating at either end with a 90° bend, the higher one of which must have an IO.
- Where more than one jump-up is installed in any circular inspection chamber, the chamber must be at least 1.2 m in diameter.
- External jump-ups must be in accordance with the appropriate Sewerage Authority's requirements.

Ladders

- Ladders must be provided in chambers 1.2 m or more in depth, except where step-irons are installed (See under 'step-irons').
- Ladders in inspection chambers must be of hot-dipped galvanised steel with not less than 20 mm diameter rungs, at least 350 mm long and spaced at not more than 300 mm.
- Stringers must be not less than 50 x 10 mm, located not less than 200 mm from the wall and fixed with stainless steel or hot-dipped, galvanised bolts to the wall, at spacings not exceeding 1 m.
- Ladders may be of other approved materials and design.

Step-irons

Step-irons may be used instead of ladders provided that:

- the chamber in which they are to be built is a dry chamber;
- the chamber does not exceed 3 m in depth;
- they are built-in during the construction of the chamber;
- they are hot-dipped galvanised steel, not less than 24 mm in diameter with at least 350 mm long rungs, constructed not less than 200 mm from the chamber wall;
- the spacing between step-irons is not more than 300 mm, but they may be of other approved materials and design.

Cement rendering

The walls of brick inspection chambers, the floor and the channels of all inspection chambers must be rendered with a coat of cement mortar, at least 10 mm thick and finished smooth.

Inspection chamber tops and covers

Inspection chambers may be constructed either full size to surface level, or to a height of not less than 1.5 m above the floor; they may be tapered to an access opening, provided the access shaft is at least 600 mm diameter and does not exceed 300 mm in length.

A circular or a rectangular access opening, at least 530 mm in size, fitted with a removable watertight cover must be provided at surface level.

Where the cover is subject to vehicular traffic or other heavy loads, the cover fitted must be heavy duty type, preferably cast iron Gatic-type cover.

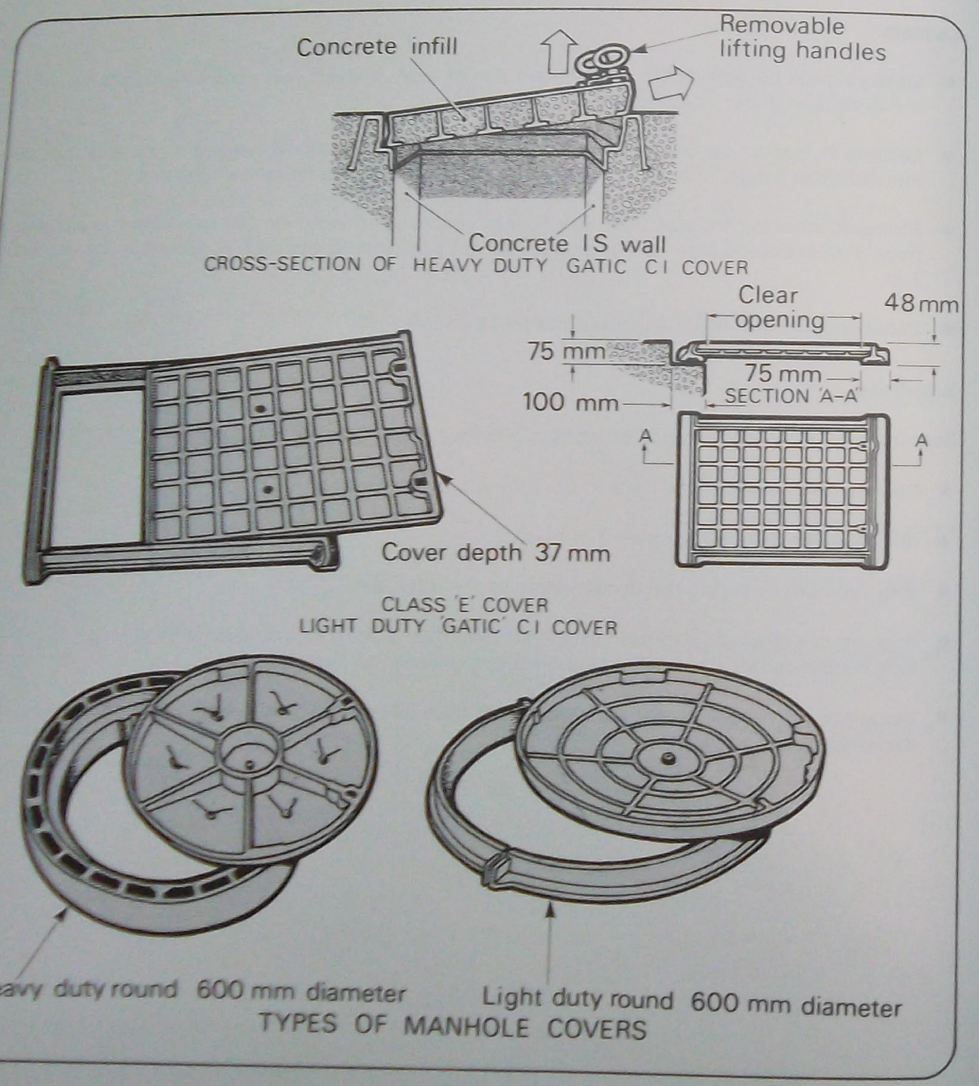

TYPES OF MANHOLE COVERS

Testing

The Authority may order a water test to an inspection chamber to be carried out.

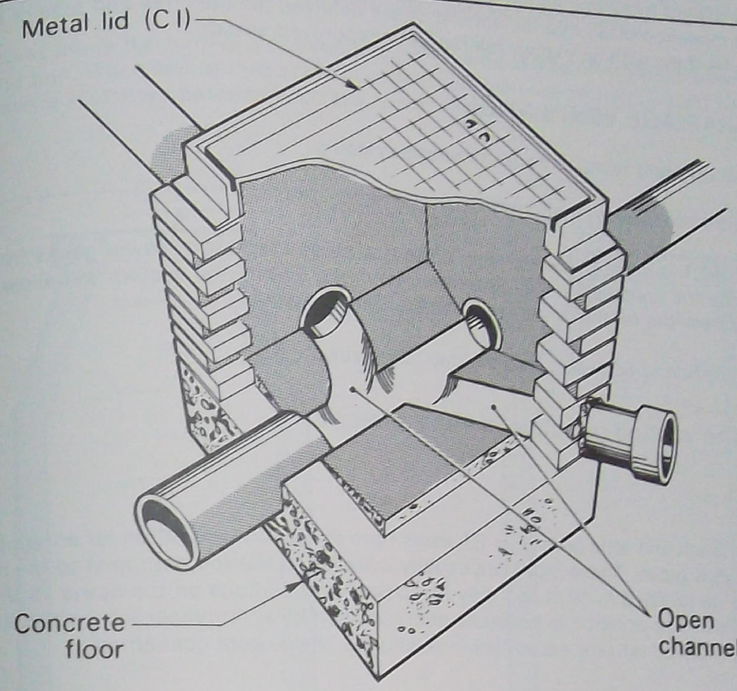

TYPICAL INSPECTION CHAMBER IN CEMENT-RENDERED BRICK

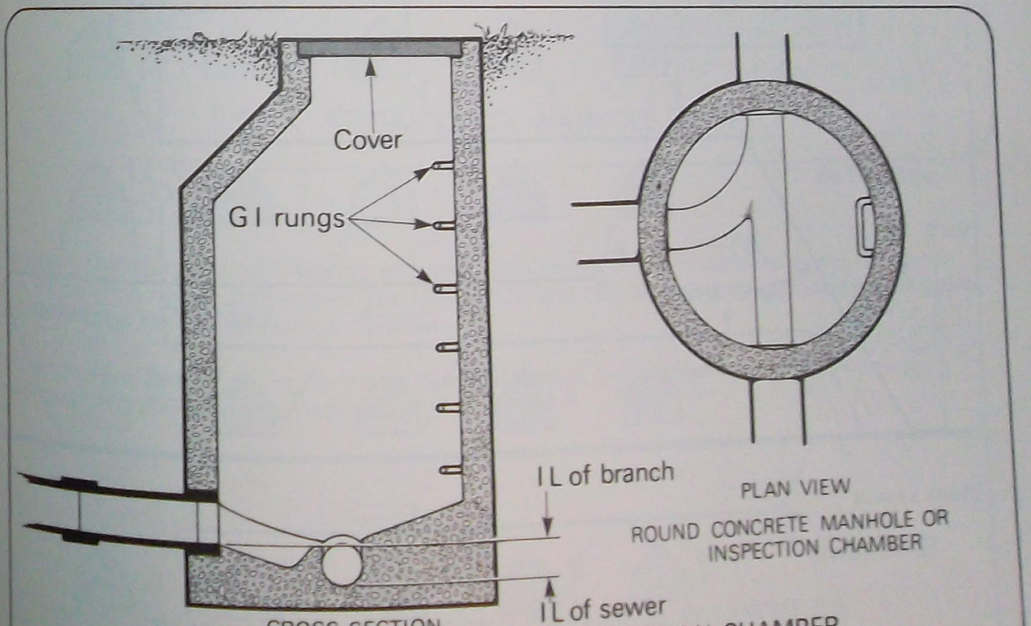

TYPICAL ROUND CONCRETE INSPECTION CHAMBER

Inserts

Holes, broken-in or formed in walls of inspection chambers for insertion of pipes or fittings must be made watertight by keying and preparing its construction joints and caulking with a stiff 2:1 mix of sand and cement mortar, into the annular space between the concrete and pipe or fitting. Sealing can be done with an expoxy resin or other approved sealant.

7.10 DRAINAGE VENTILATION

There are two different types of house drainage systems.

- Interception by boundary trap. (BT)
  - — When a BT is used, the water-seal in the trap stops the flow of sewer gases from the retic entering the house drains. On the other hand, the BT-omitted system will allow sewer gases from the retic to enter the house drainage system.
- Non-interception or boundary trap omitted (See drawings).

7.10.1 The venting principle of each system

BT areas

Trunk, main, branch and retic sewers in BT areas have to rely on ventilation air entering the system through large vent pipes. These pipes are usually installed in the footpath next to the roadway. Their height is generally 6 to 10 m and they are located in positions on the sewer to allow for maximum air flow. The position is generally decided upon by an engineer who would have calculated the required air flow capacities in relation to the sewers concerned.

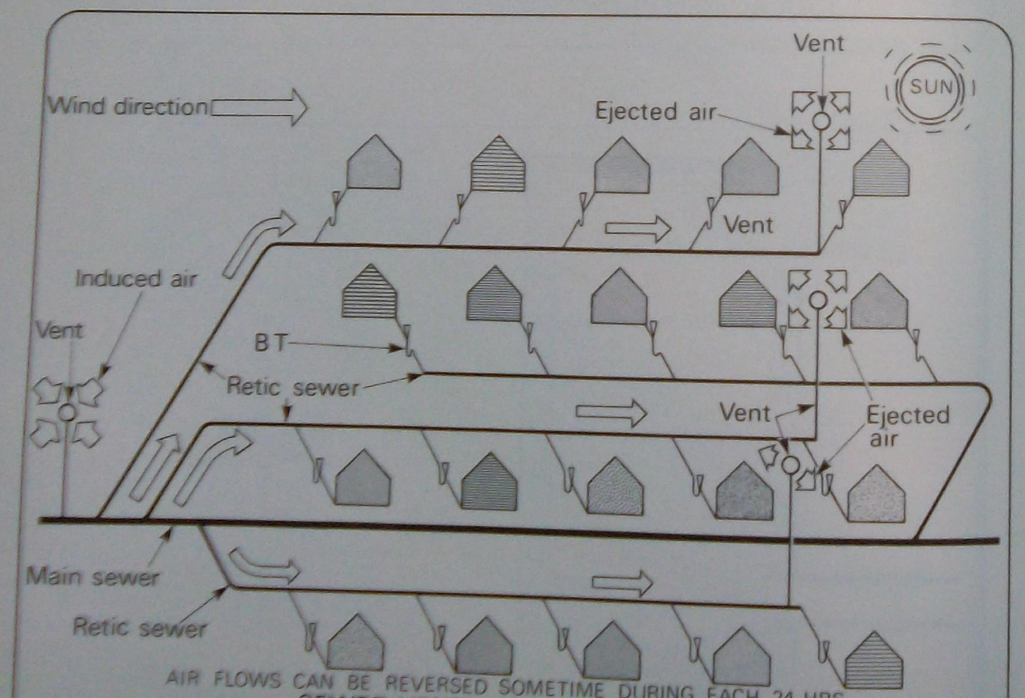

SEWER VENTILATION BT AREAS

BT-omitted areas

In BT-omitted areas the situation is very different. These areas are specially designated because all main and retic sewers are air-disconnected from the trunk and branch sewers by manholes which control the flow of sewer gases. These are known as gas-check manholes.

These manholes are in the form of a running trap with the air sealed off from the downstream section of the trap. When two of these manholes are installed on a section of main sewer, the flow of sewer gases is restricted between each gas check. See drawing below.

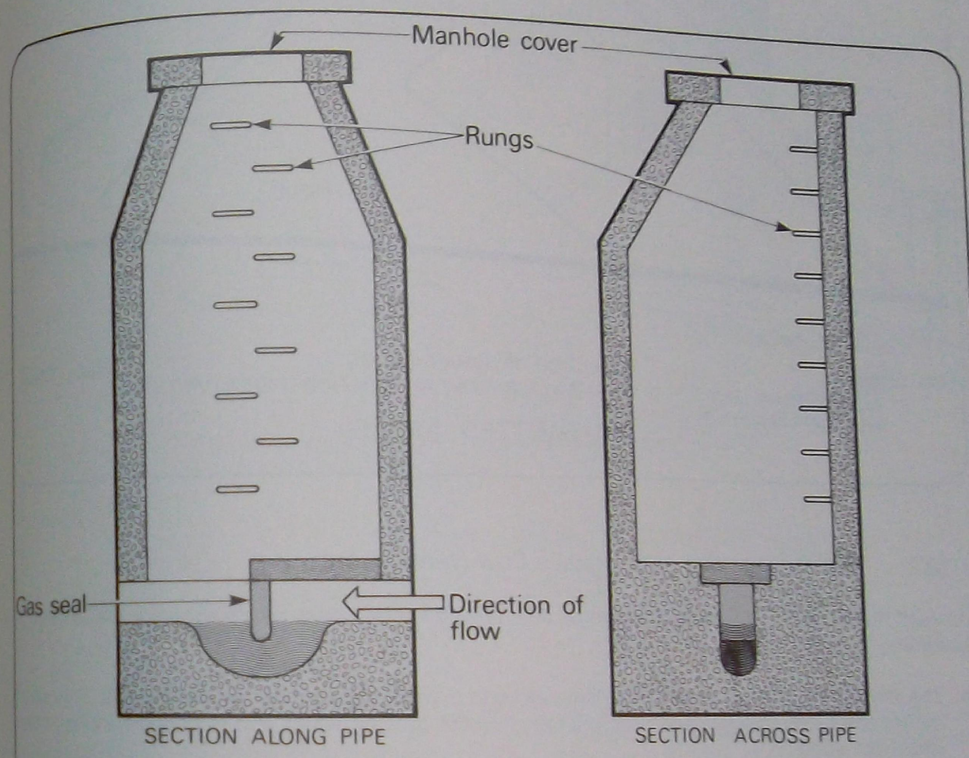

GAS CHECK MANHOLE

However, the main and retic sewers still need ventilation and this is achieved by the removal of the BT on each house connection. The lack of BTs with their associated water-seals allows sewer gases to enter the house drainage system.

Once the sewer gases are in the house drainage system, they are ejected out via the house drainage vents (See drawing page 98).

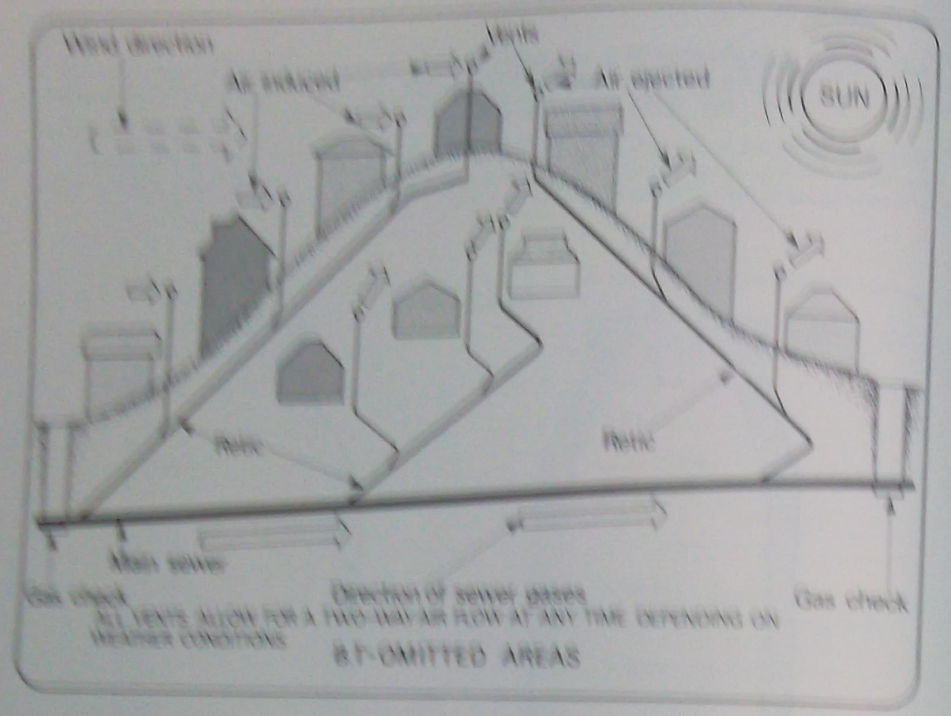

BT-OMITTED AREAS

7.10.2 Maintenance of sewer gases flow (ventilation)

On each house drainage system, there must be drainage vents. These vents perform the following functions:

- The ventilation air in the pipes dries out any solid matter that adheres to their walls. This solid matter peels off the walls when dry and falls into the flowing water and is carried along to the treatment works.
- The flow of ventilation air and sewer gases is necessary to stop pockets of sewer gases from accumulating in the mains.
  - It must be remembered that all large sewers must be maintained by workmen whose job it is to clean and inspect them from time to time.
  - The build-up of sewer gas could cause an explosion and endanger life.
- The flow of sewer gases and ventilating air is used to maintain a balance of pressure on one side of the drainage traps. (See Section 7.2.5).

7.10.3 House drain ventilation

On a house drain in a BT area, the air required to clean the drain must enter at one end and be ejected out at the other. It is assumed that the air rises in the pipe, especially in relation to the house drain.

With this in mind, we must make provision for air to be introduced at the lowest end of the house drain.

This is done in two ways:

- through a vent at ground level, situated on the BT shaft.
- through a high-level vent pipe known as the downstream vent (D.S.V.) which branches off the drain, close to the BT water-seal.

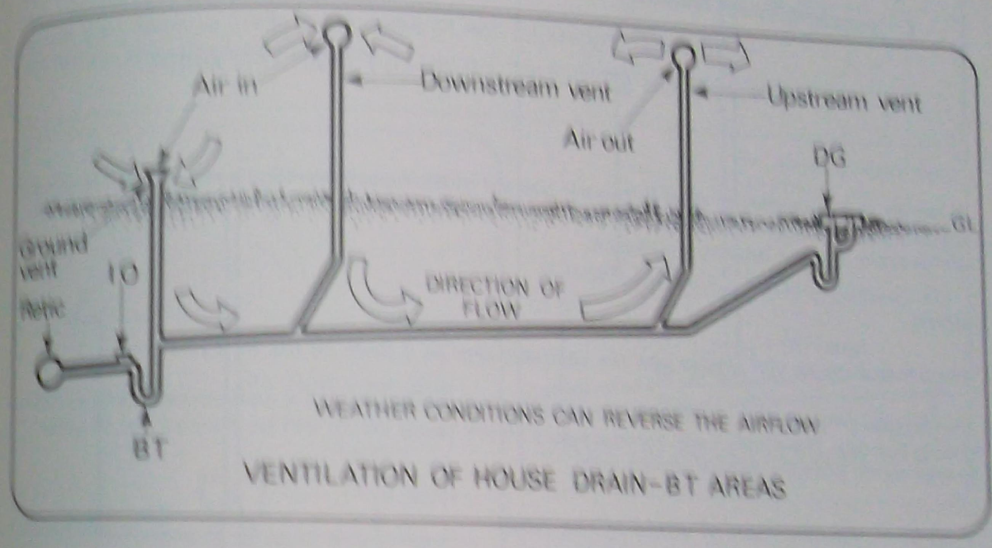

WEATHER CONDITIONS CAN REVERSE THE AIRFLOW

VENTILATION OF HOUSE DRAIN–BT AREAS

The air moves along the pipe and follows the grade because it is sloping upwards towards the shallow end of the drain. At this stage, the sewer gases are ejected through the upstream vent. This vent is a high-level vent which allows foul odours and gases to escape into the atmosphere and not cause a nuisance.

7.10.4 The importance of vent position on the drain

In any house drainage system, any portion of the house drain, over 6 m in length, must be ventilated. The reason for this is that a certain quantity of air pressure must be available at all times at atmospheric pressure to protect the water-seals in all drainage traps.

When the drain exceeds 8.5 m in length, an extra vent must be installed to protect the water-seals, except in the case where the branch is to a DG when 10 m is allowed.

7.10.5 BT-omitted areas

In the case of BT-omitted areas, there is no need to introduce air into the house drainage system at its deepest point. This is achieved by the introduction of air into the sewer refics from other houses in the street; this entry of air depends much upon the weather conditions in the area at that time. (See illustration page 100).

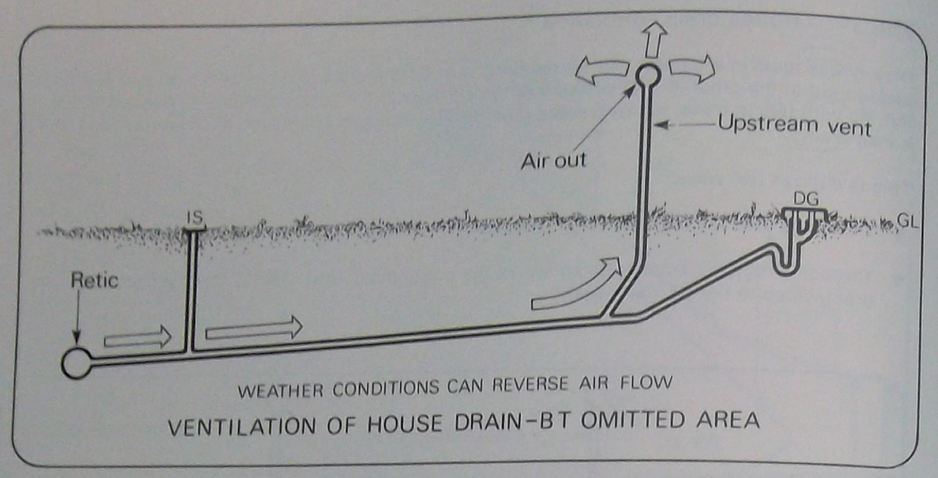

VENTILATION OF HOUSE DRAIN–BT OMITTED AREA

However, it is necessary to eject this sewer gas out of the house drainage system. This is done by installing an upstream vent which is a high-level vent that safely ejects the sewer gases into the atmosphere, without causing a nuisance.

NOTE:

The 8.5 m distance still applies with the upstream vent as it does on the BT system.

Due to changing weather conditions, the upstream vent may become a downstream vent sometime during the day. Therefore, it will introduce air into the sewer which will be ejected out of other house vents, possibly several streets away.

7.10.6 Connection of vents to the drain

At the deepest end of the drain on a BT connection, the BT shaft is extended above ground level and a fitting, known as a ground vent, is installed. (See illustration below).

The slots in the ground vent allow for the entry of air into the sewer on the upstream side of the BT water-seal. This air is then free to travel up the house drainage system.

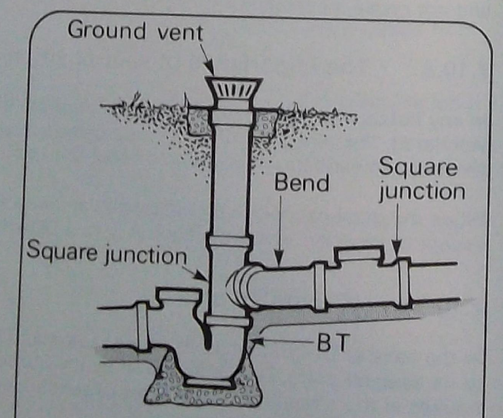

BT AND GROUND VENT CONNECTION

7.10.7 Connection of the downstream vent

VENT & DRAIN DWGS.

If the BT and shaft are too close to the house, and there is the risk of sewer gases entering the building, a high-level downstream vent is connected to the drain and extended vertically above the roof line.

The branch to the D.S.V. must not exceed 8.5 m in length from the water-seal in the BT to the centre line of the oblique branch. The next illustration shows the installation of the vent pipe when no fixtures are connected.

However, if a sanitary fixture such as a W.C. is located in this part of the house, then the vent pipe connecting the W.C. to the sewer can also be used as the downstream vent. When this is done, the name of the vent is changed to a soil-vent pipe (S.V.P.) because of the soil fixture's connection. (See illustration below).

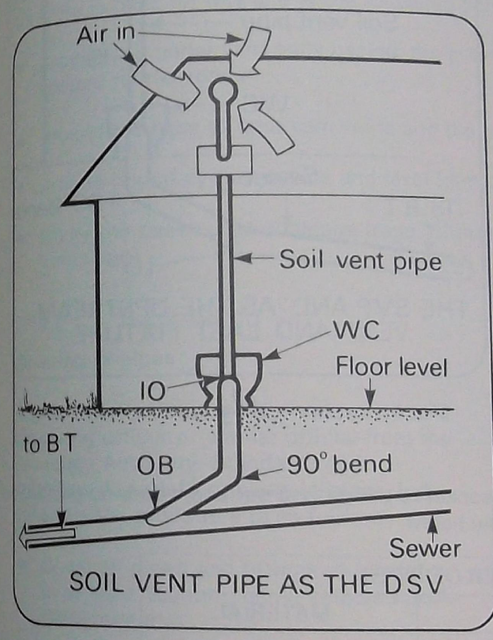

SOIL VENT PIPE AS THE DSV

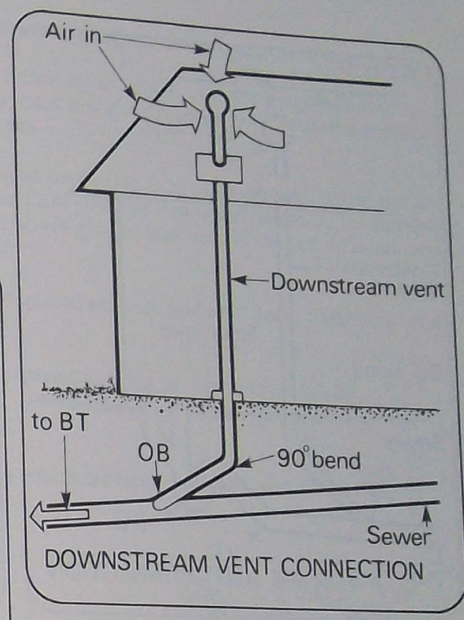

DOWNSTREAM VENT CONNECTION

BT – Boundary Trap

7.10.8 Connection of the upstream vent

At the shallow end of the drain, the connection of the upstream vent is slightly different.

If the upstream vent (U.S.V.) is to be installed without any fixtures discharging into it, the vent must be installed within 8.5 m from the upstream water-seal. The reason for this is that any dirt or scale, etc. that falls down the vent pipe will be washed down the house drain by the last disconnector gully fixtures' discharge. (See illustration next page).

The maximum distance from the upper end of the drain that this branch pipe may be connected is 8.5 m to ensure that an adequate supply of air at atmospheric pressure is available to balance the air pressure on the upstream DG's water-seal. Once this distance is exceeded, the water-seal in the disconnector gully will be lost.

However, the upstream vent may be installed as the vent pipe of a sanitary fixture, e.g. W.C. (See next illustration). In this case, the vent is called a soil vent pipe (S.V.P.). The S.V.P. can either be the second last or the last fixture on the drain. If it is the second last fixture, and a DG is the last one, then the 8.5 m rule applies for the reasons already stated.

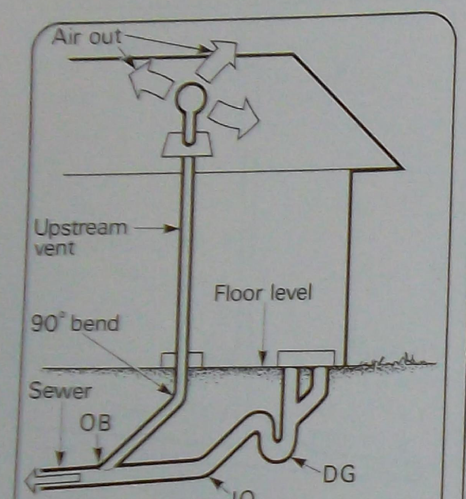

THE UPSTREAM VENT CONNECTION

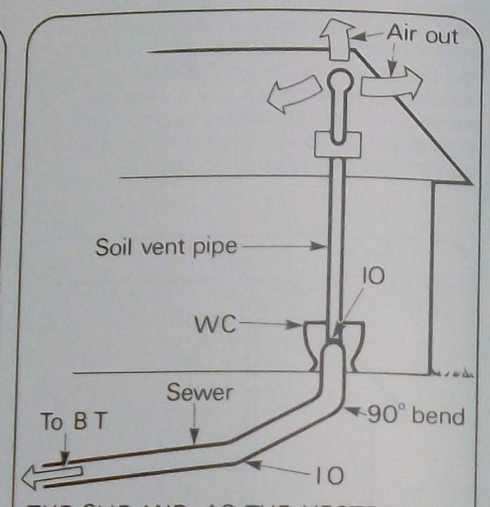

THE SVP AND AS THE UPSTREAM VENT AND LAST FIXTURE

Disconnector gully

7.11 PROTECTION OF DRAINS

The minimum depth of cover, from the top of the socket to the ground surface where no protective cover is used, must be in accordance with the table below.

MINIMUM COVER OF PIPES	
Location	MATERIAL
	VC, CI (4.7 mm walls) UPVC, Copper, Copper alloys
In public thoroughfares, right of way, and other places subject to heavy vehicular traffic.	750 mm
Light vehicular traffic	450 mm
Elsewhere	300 mm

7.11.1 With concrete protection

In public thoroughfares, right of way and other places subject to heavy vehicular traffic and where there is less than 750 mm of cover to ground surface, a protective cover of at least 100 mm of concrete must be provided.

In places not subject to heavy traffic, a concrete path is considered sufficient protective cover.

NOTE:

Check with your local Sewerage Authority for individual rulings in relation to pipe protection.

Regulations normally require an inspection of the drain by an officer of the Sewerage Authority before the trench is back-filled and in most areas, back-filling must be carried out in the presence of the approving officer according to set procedures.

It is not only the drain pipes in the system that need protecting from stresses from above but also the other fittings in the system must be protected from stresses that could be set up by movement in the soil or by other means where drain fittings above ground level are concerned. In most cases, concrete is used for this and at the following points:

- Around and under yard gully basins, the external and exposed surfaces being finished with a cement mortar render.
- Around the base of upstream vents and the exposed sockets of downstream vents.
- Around boundary trap covers and level inlets.
- Under the bases of all drainage traps, fittings which are used vertically, and at the base of 'jump-ups'.

7.11.2 Back-filling

Covering of pipes

This is usually done in the presence of an approving officer or similar official from the Sewerage Authority. Standards and practices do vary from place to place, but generally the procedure is as follows:

- Cover all pipes and fittings to a height of at least 300 mm, using selected back-filling material.
  - The back-filling must be free from rock or coarse particles and is placed in layers of about 150 mm thickness, each layer being compacted by light manual tamping.
  - If local back-filling material is considered unsuitable by the approving officer, it may have to be obtained from elsewhere.

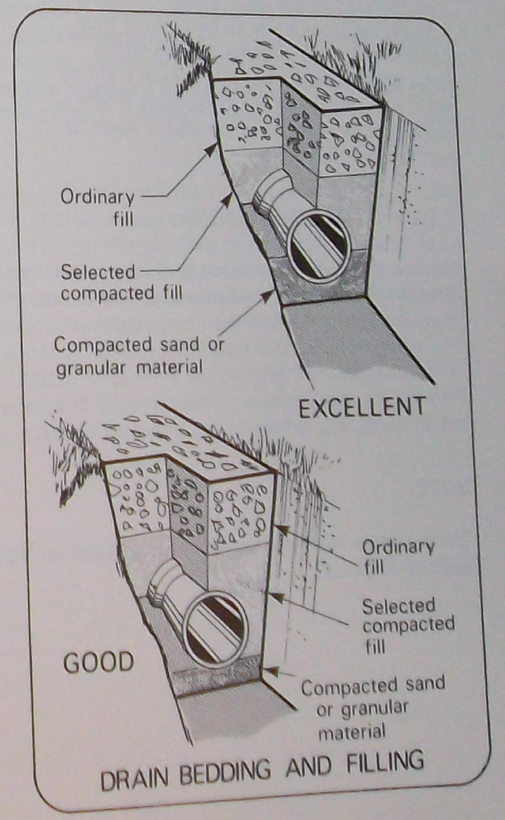

DRAIN BEDDING AND FILLING

- Complete the remainder of the back-filling, using material free from rocks greater than 150 mm.

  — This back-filling material is also placed in layers of 150 mm thickness and progressively compacted until the whole trench is filled well beyond ground level to allow for future settling.

Back-filling for vertical pipes

Such pipes are always braced against movement when being placed and the bracing must not be removed until back-filling has been completed. The procedure and requirements for vertical pipes is similar to that for other pipes, except that layering can be done in stages not exceeding 300 mm, each tamped lightly in turn until the back-filling is complete.

  — The back-filling material must usually be approved and should not contain coarse material or rock in excess of 30 mm nominal size. This may vary according to local regulations.

7.12 STORMWATER AND WASTE DISCHARGES

Stormwater must not be allowed to enter house drains. Inlets to drains are kept at about 75 mm above the level of surface draining areas and where drain inlets, such as air breaks, are located in areas subject to flooding, additional protection from stormwater entry is given by including a sluice valve that can be closed off during periods of flood, so isolating the drain.

In other cases, a sluice valve may be incorporated in the drain system to allow accumulation of water to be drained from cellars into the sewerage system where local arrangements permit it. Such a sluice valve can be closed off in the case where a drain blockage would allow waste water or soil to enter the cellar.

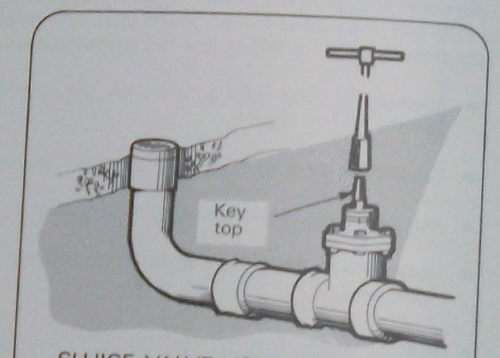

SLUICE VALVE USED TO ISOLATE DRAIN OR CELLAR OUTLET

7.13 TRADE WASTES

Some household and industrial discharges are not permitted to enter house drains or sewers directly. They must be treated specially to prevent damage to sewers or to disposal areas. This special treatment alters the composition of the discharge or separates out the harmful substances. The equipment for this treatment is dealt in more detail in the other manuals on drainage.

Fittings for this purpose consist usually of a variety of traps adapted for the specific function they are to serve, e.g. grease traps, interception traps, peel traps, neutraliser tanks and the like.

NOTE:

Trade wastes will be covered in more depth in '10-4 Sanitary Plumbing — Connection Systems & Special Disposal'.

7.14 PUMP DISCHARGES

When sanitary fixtures are located below the level of the Sewerage Authority connection point (generally in basements), or where there is risk of backflow (in the event of the sewer becoming overcharged), it will be necessary to raise the sewerage through one of the following installations:

- Compressed air sewage ejector (soil and waste fixtures).
- Wet well (soil and waste fixtures).
- Wet well (waste fixtures only).

NOTE:

Seepage or stormwater in basements must also be raised by a pump, but cannot discharge into the sewerage system without the consent of the Sewerage Authority.

When the discharge to be raised contains excreta and other matter, a compressed air sewage ejector or a wet well must be used. (See the following 2 illustrations).

7.14.1 Compressed air sewage ejector

A sewage ejector consists of two major components:

- The pot; and
- The valveless compressor.

The sewage pot acts as a reservoir whilst filling and as a pump during the discharge of sewage. It contains a heavy-duty float mechanism, an inlet check valve and an outlet check valve.

When filling, the sewage pot is vented to the atmosphere by way of pipework from the top of the pot to the compressor and out through the vent line. This automatic venting is achieved without the need for any complicated valve controls due to the special design of the liquid-ring compressor. The pot fills by gravity feed and the float rises to a predetermined point, when an oil-immersed waterproof switch is closed and the compressor contactor is energised to start up the compressor.

The compressor fills the pipeline as well as the space within the top of the pot with compressed air and the pressure continues to rise until it is sufficient to overcome the static head existing in the rising drain. At this point the sewage is forced out of the pot. The compressor operates for a preset 30-second period, all contents of the sewage pot are ejected into the rising drain. The compressor then stops and once again the pot is vented to the atmosphere, enabling the inlet check valve to open and the next filling cycle to commence.

Units are available with capacities ranging from 600 to 1350 litres per minute, operating against total heads from 3 to 30 metres.

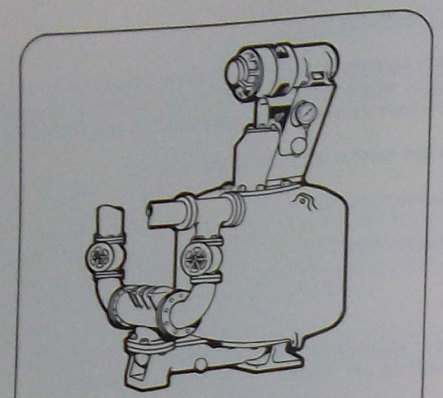

COMPRESSED AIR SEWAGE EJECTOR

7.14.2 Compressed air sewage ejector installations

Inlet pipe

A reflux valve and a gate valve must be provided; these are normally an integral part of the ejector pot, while the pipework is supplied by the manufacturer.

Drains connecting to the pot must be designed and installed as would be a normal property drain connected to a boundary trap system; that is, it must have a downstream drain vent, fitted within 8.5 m of the pot and an upstream drain vent placed within the last 8.5 m of the discharge drain (See illustration that follows). For more details of the placement of drain vent, check the section on the drain vents.

Outlet pipe

A reflux valve and a gate valve must be provided and are normally an integral part of the ejector.

The outlet pipe from the pot may connect directly to the boundary shaft or to the property drain.

When connected to the property drain, the junction fitting must be at least 2.5 m away from any other connection, upstream or downstream, as shown on the illustration.

Before the connection can be made to the property drain, the outlet pipe from the pot must be extended to above the property drain before it can be turned down and the connection made, as shown.

NOTE:

Pipework and fittings on the outlet side of the pot must be flanged cast iron, or, weldable tube as specified by the Sewerage Authority. The reason being that this section of pipework is under pressure when the compressor is operating. All measurements should be checked with the appropriate Sewerage Authority as they may vary between States.

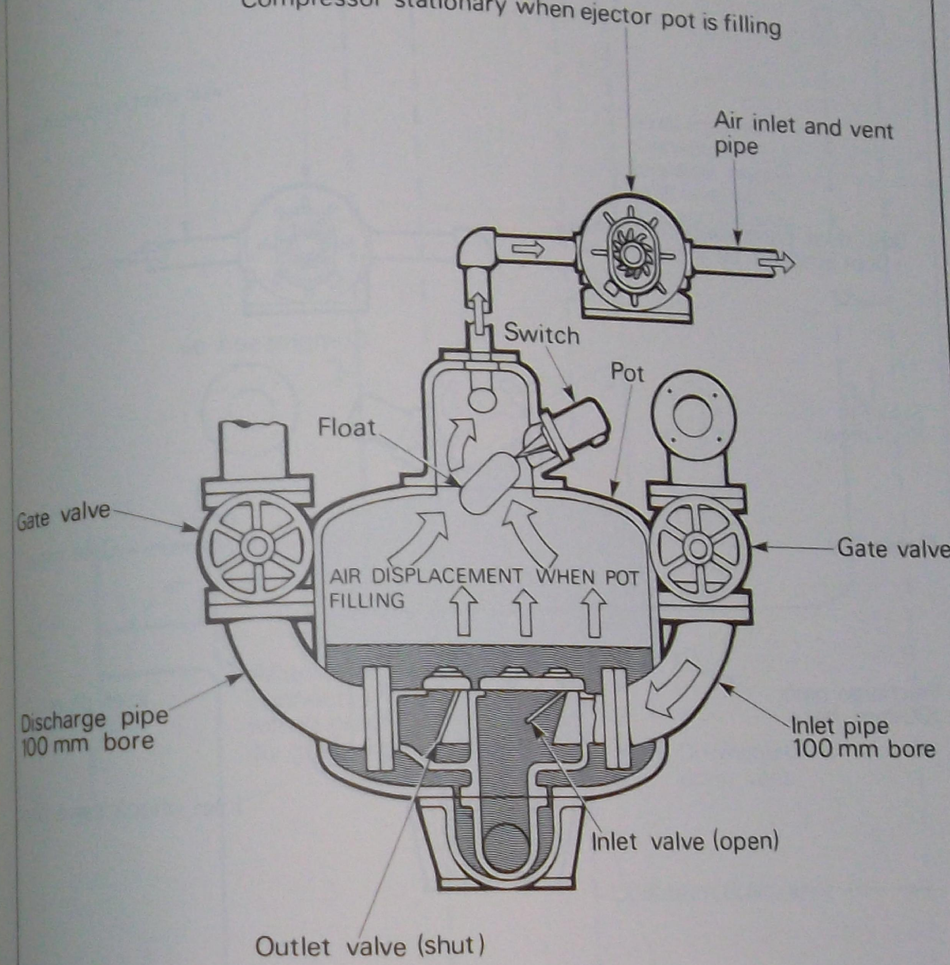

COMPRESSED AIR SEWAGE EJECTOR FILLING

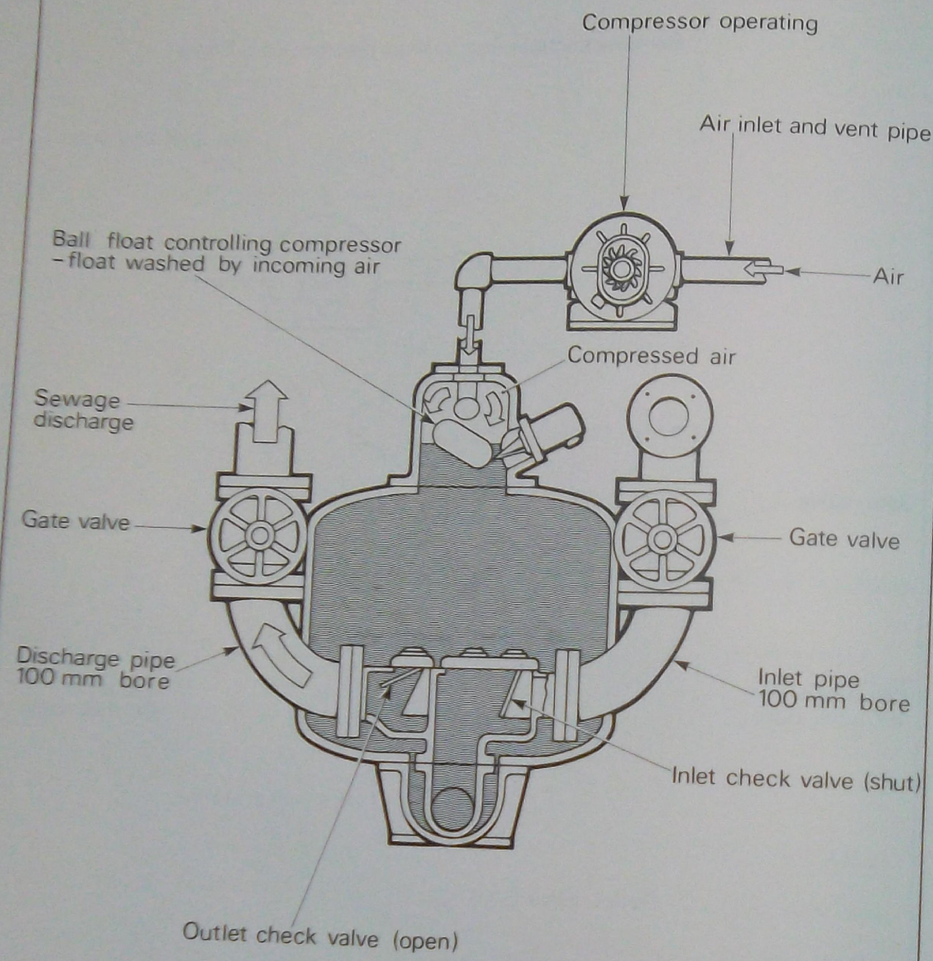

COMPRESSED AIR SEWAGE EJECTOR DISCHARGING

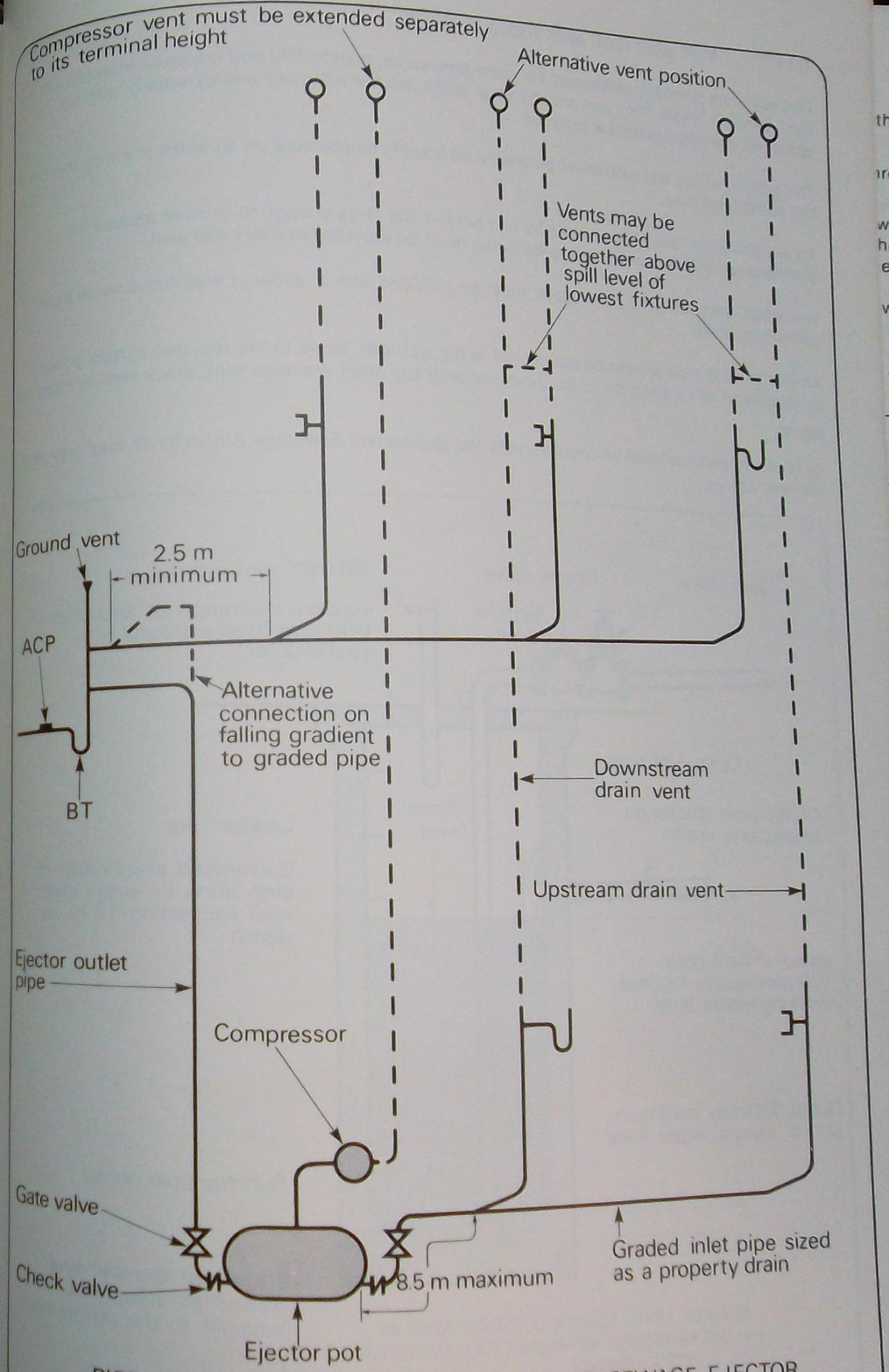

PIPE INSTALLATION OF A COMPRESSED AIR SEWAGE EJECTOR

7.14.3 Wet well (soil and waste fixtures)

Wet wells are normally reinforced concrete structures, built in situ and rendered internally to a hard, smooth finish. They can also be steel tanks, coated internally and externally with an approved corrosion-resistant material.

The bottom of the wet well must be graded as steeply as possible on all sides towards the entry to the pump inlet pipe.

An airtight cover, easily removable by one person and large enough to provide access for maintenance and removal of pumping units, must be provided to every wet well.

Wet wells, exceeding 1.5 m in depth, must be provided with a ladder or step-irons made from galvanised steel.

An 80 mm vent pipe should be connected to the wet well, close to the top, and extend either separately to its termination or be combined with any other drainage vent, stack vent or relief vent.

NOTE:

All measurements should be checked with the appropriate Sewerage Authority as they may vary between States.

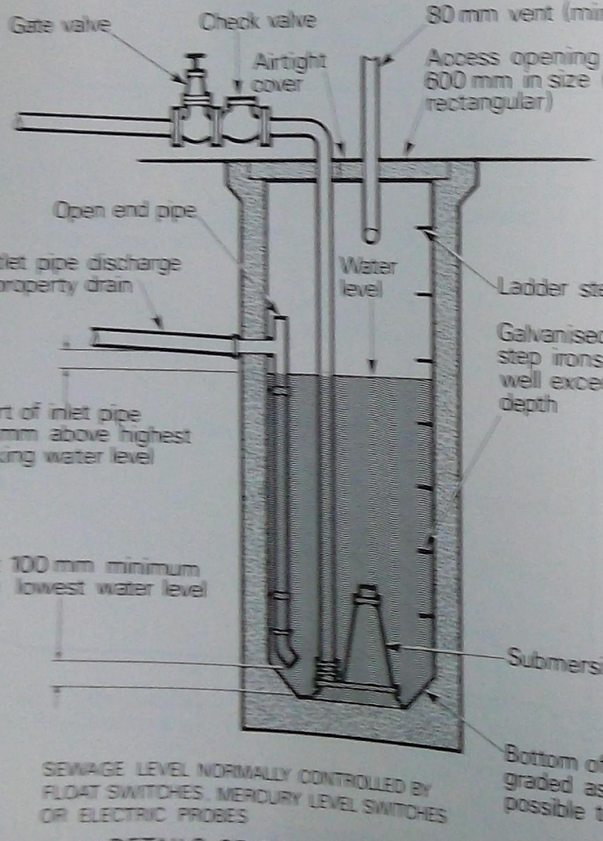

DETAILS OF THE CONNECTIONS TO WET WELLS

NOTES

Inlet pipes

A bend of suitable radius at the lower end of the vertical pipe should terminate close to the sloping floor directed towards the pump, with the outlet at least 100 mm above the lowest water-level.

The inlet junction to the wet well must be at least 100 mm above the highest water-level, with the vertical pipe clipped securely to the inner wall.

Drains connected to the wet well must be sized and designed as a normal property drain installed without a boundary trap; that is, it must have only upstream drain vents, these being placed within the last 8.5 m of the discharge drain. Positioning of upstream drain vents can be checked in the section on drain vents.

NOTE:

No downstream drain vent is required because foot ventilation has been provided with the junction fitting inside the wet well.

Outlet pipe

Submersible pumps are normally used to raise sewage from wet wells. The pump must be placed at the lowest point of the well and supported by a chain for stability and for the removal of the pump for maintenance. An alternative method to raise sewage is by installing one or more pumps outside the wet well. They may be placed either in a separate sump constructed beside the well or above the well whereby the sewage must first be raised to the pump and then forced to the property drain.

A reflux valve and a gate valve must be provided on the outlet pipe in such a position that the pump can be readily removed for maintenance.

The outlet discharge pipe from the wet well can connect directly to the boundary shaft or to the property drain.

When connected to the property drain, the junction fitting must be at least 2.5 m away from any other connection upstream or downstream. The discharge pipe must rise to above the graded property drain before it can be turned down and the junction connection made to the drainage.

NOTE:

Pipework and fittings on the outlet side of the wet well must be flanged cast iron or weldable tube as specified by the Sewerage Authority. The reason being that this section of pipework is under pressure when the pump is operating.

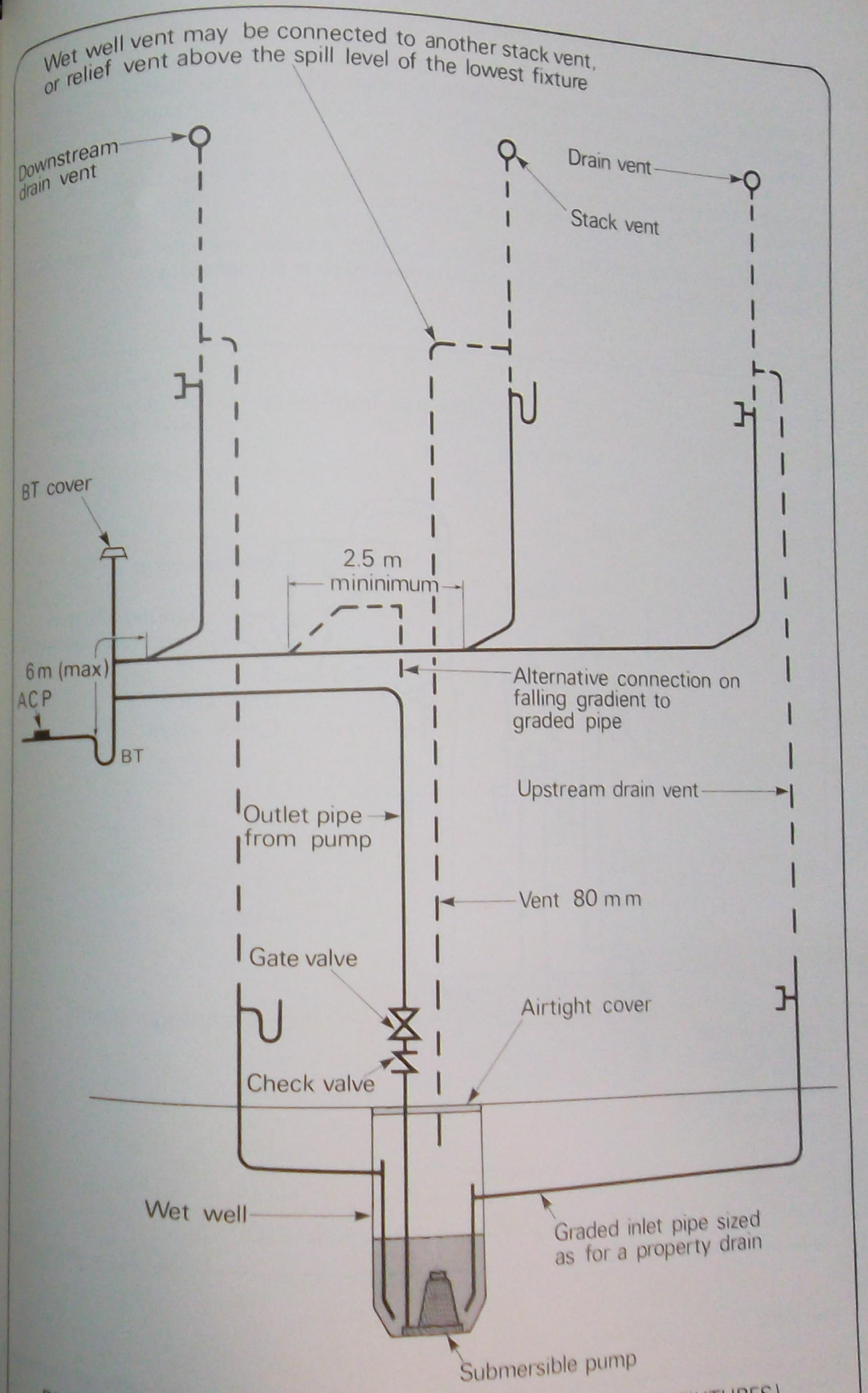

PIPE INSTALLATION OF A WET WELL (SOIL AND WASTE FIXTURES)

7.14.4 Wet well (Waste fixtures only)

The construction of the wet well will depend on the area in which the well is to be placed and the number and type of waste fixtures connected to it. If there is only a small number of fixtures discharging to the well, then it may be desirable to construct the well from copper, copper alloy or steel, coated with a corrosion-resistant material.

If the materials mentioned above are not suitable, it will be necessary to build a wet well of concrete, or brick, rendered internally to a smooth, hard finish.

The cover over the wet well may be loose fitting or airtight, provided that when an airtight cover is used, the wet well must be ventilated with a 50 mm vent pipe to the atmosphere.

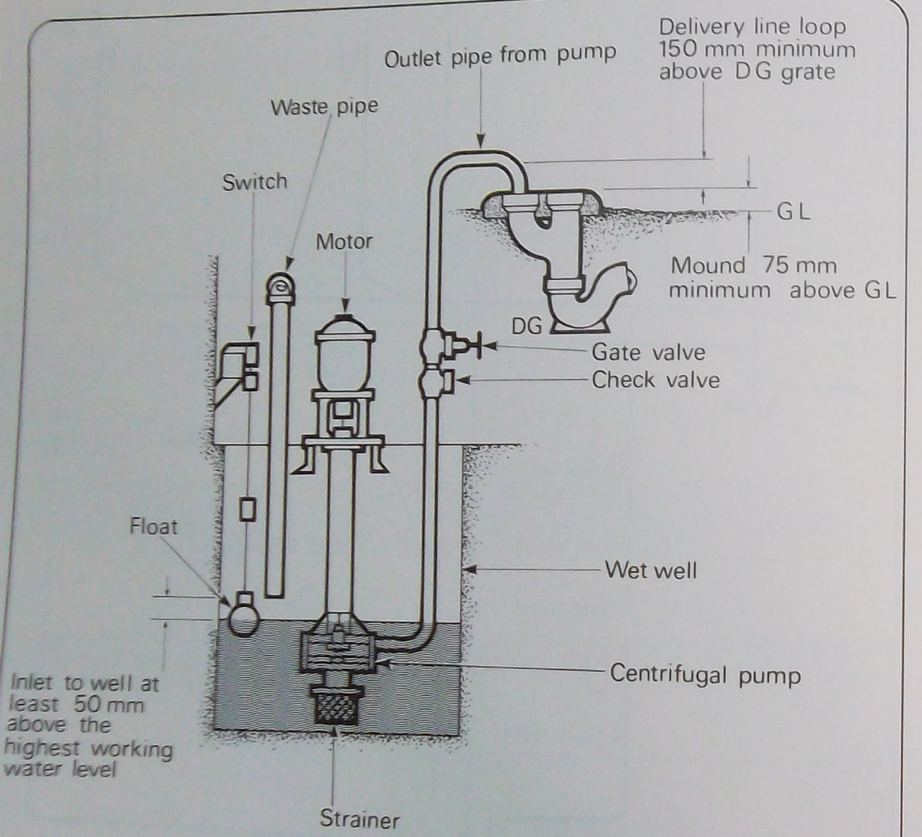

WET WELL (WASTE FIXTURES ONLY)

Inlet pipes

The design and size of waste fixtures connected to the wet well should be the same as for fixtures connected directly to the property drain.

Inlets to wet wells must be at least 50 mm above the highest working water-level.

Outlet pipe

A reflex valve and a gate valve must be provided on the outlet pipe in such a position that the pump can be readily removed for maintenance.

The outlet discharge pipe from the wet well can connect directly to the property drain or through a disconnector gully.

When connected directly to the property drain, the junction fitting must be at least 2.5 m away from any other connection, upstream or downstream. The discharge pipe must rise above the graded property drain before it can be turned down and the junction connection made. If the outlet pipe from the wet well is to be connected to a disconnector gully, it must loop above the disconnector gully grate at least 150 mm to allow any surcharge of the property drain to flow out of the grate and not flow back down the wet well discharge pipe.

NOTE:
All measurements should be checked with the appropriate Sewerage Authority as they may vary between States.

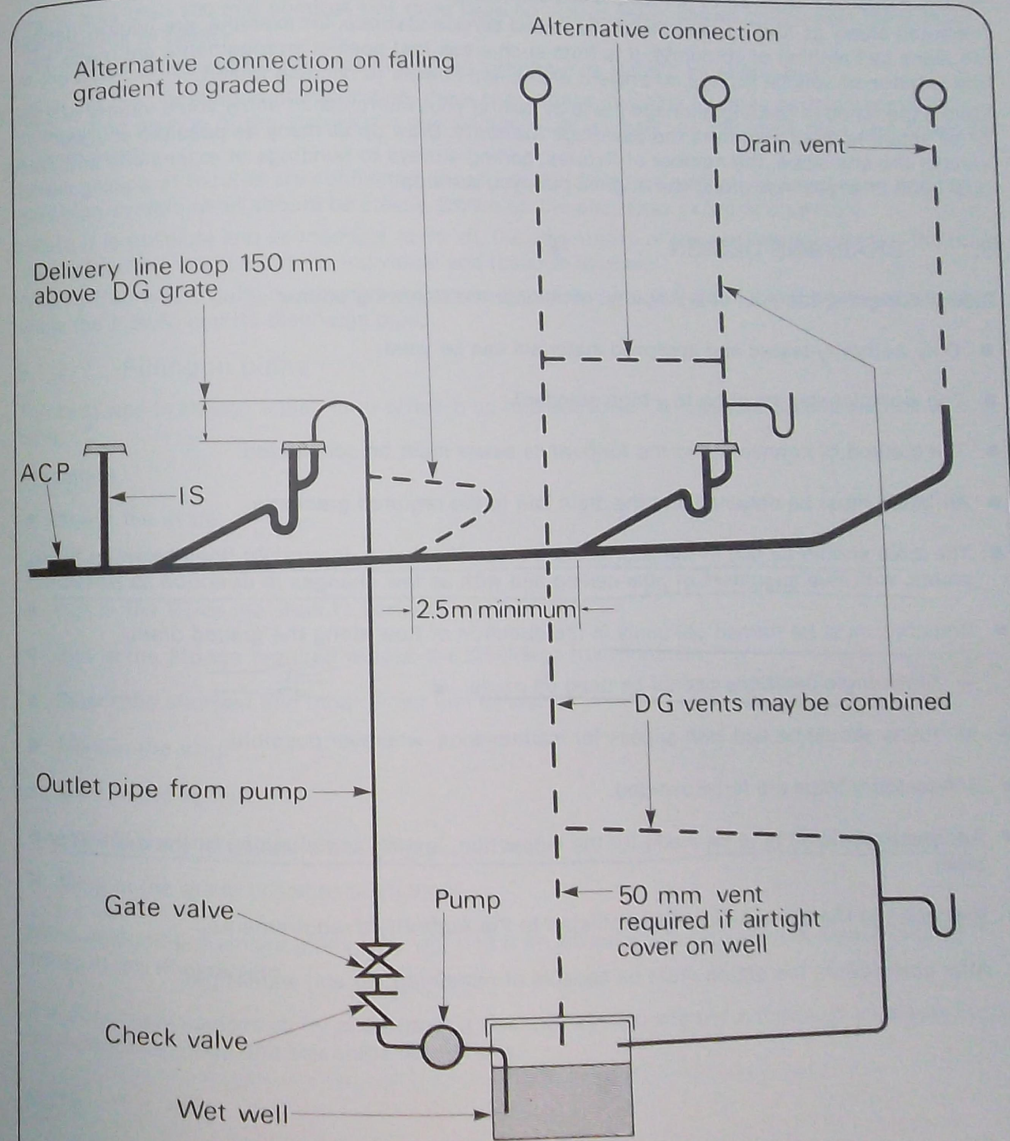

INSTALLATION OF A WET WELL (WASTE FIXTURES)

8 DRAINAGE PLANS

Plans for typical private residences are shown.

Plans are usually drawn to a 1:500 scale, but where there are many fittings or fixtures, a scale of 1:100 is not uncommon for the sake of clarity.

Plans indicate the position of all fixtures and fittings, and where the nature of the site or the installation makes it necessary, special requirements are shown as well, for instance, the location and number of anchor blocks. Drain fittings are identified on the plan by their standard abbreviations and sometimes, the building fixtures as well. Also the type of drainage material is specified and the means by which connections, supports and vents are to be made, located and secured.

On completion of the installation, an inspector from the Sewerage Authority will check it and test it before approval is given to proceed with back-filling.

'Polluted areas' as found in butchers' shops and service stations, for example, are usually defined on plans by hatching or colouring. It is from such areas that special arrangements are made, by the location of special fittings, to prevent drains and sewers to become fouled.

Gain experience in reading drainage plans by asking your instructor to show you a variety of plans or by acquiring your own from the Sewerage Authority. Draw up as many as possible yourself varying the site slope, the number of fixtures, adding storeys to buildings or extensions and noting how such changes may affect the original plan you drew up.

8.1 DRAINAGE DESIGN

Before designing the plan of a property, remember the following points:

- Only Authority-tested and approved materials can be used.
- The workmanship must be to a high standard.
- The method of connecting to the Authority's sewer must be considered.
- All levels must be obtained and the drain laid to the required gradients.
- The drain should be laid in the shortest and most direct way, in straight lines between fixed points, with true alignment of pipe ceiling and with as few changes in direction as possible.
- Branches must be formed obliquely in the direction of flow along the graded drain.
  - Right-angle junctions cannot be used on grade.
- All drains should be laid with access for maintenance, wherever possible.
- Unnecessary traps are to be avoided.
- Adequate provision is to be made for the inspection, testing and cleaning of the drain at any time.
- Every part of the system must be ventilated to the Authority's requirements.
- After completion, the drains must be capable of remaining air- and water-tight.

8.1.1 Plan work

All drains, regardless of size must be shown on the plan.

Drains having a minimum normal size of 100 mm must have their nominal size and grade indicated on the plan.

Label the following:

- DG
- 100 × 90° bend
- 100 × 45° × 88½° junction on its back

NOTE:

Do not label level inlets.
A urinal connection can be labelled U.T. or size × 90° bend.

Drains less than 100 mm nominal size must have no size or grade shown on the plan other than the labelling of bends.

At the point where a drain reduces in size, an altering pipe symbol must be used.

When, on the installation configuration, there is no space available to show certain necessary details, that portion of the installation may be shown as an insert on the block plan, and drawn to a larger scale.

Where groups of fixtures are connected directly to the drain, the method of connection and the plumbing system used should be clearly shown on the plan. (See example drawings).

Where it is possible and economical to do so, the advantages of the ventilating effect of the drain should be used, particularly for individual and isolated fixtures.

When a floorwaste gully is provided and connected directly to the drain, it will be necessary to show the F.W.G. and its discharge pipe.

8.1.2 Filling in plans

The best way to design a plan is to divide it up into sections. Concentrate on one section at a time.

Procedure

- Check the scale.
- Survey the plan.
- Plot in the BT or the shaft to surface.
- Plot in the fittings required to take the discharge from fixtures.
- Select the shortest and most direct line of drain.
- Mark in the IOs.
- Mark in the vents.
- Mark in the size of drainage pipes.
- Mark in the grade or fall of drain pipes.

When designing drainage plans, you will find it an advantage to prepare it in pencil prior to inking-in the final design.

It is absolutely useless to try and design a drainage system without a thorough knowledge of the local plumbing code and sewerage regulations.

NOTE:

Refer to Section 4.2 for abbreviations used on drainage plans.

DG - Disconnector gully IO - Inspection opening SHR - Shower BSN - Basin
ORG - over flow relief gully
AP - Altering pipe, WC - water closet SK - sink
DV - Drainage vent.
ACP authority connection point
GV ground vent

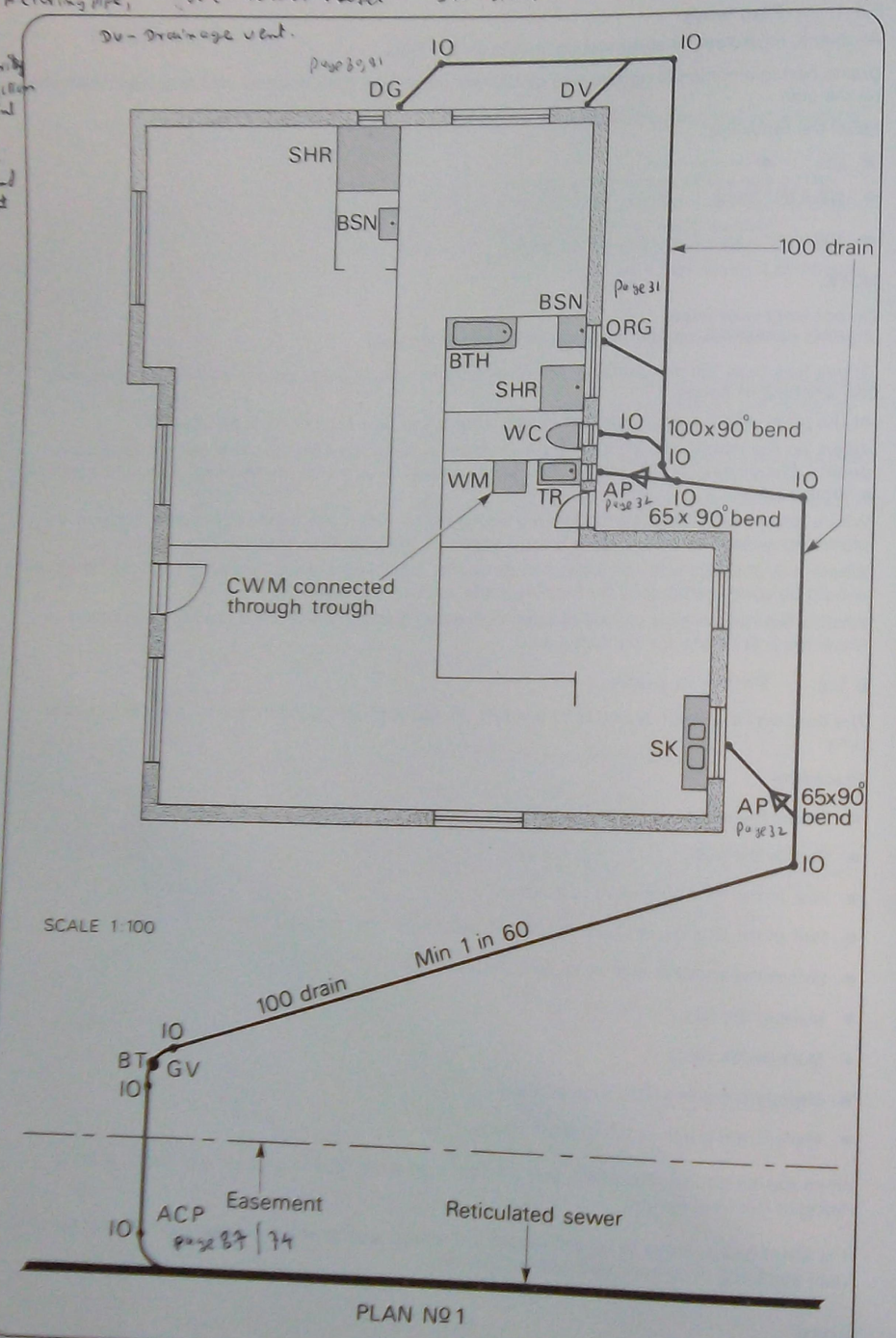

PLAN Nº 1

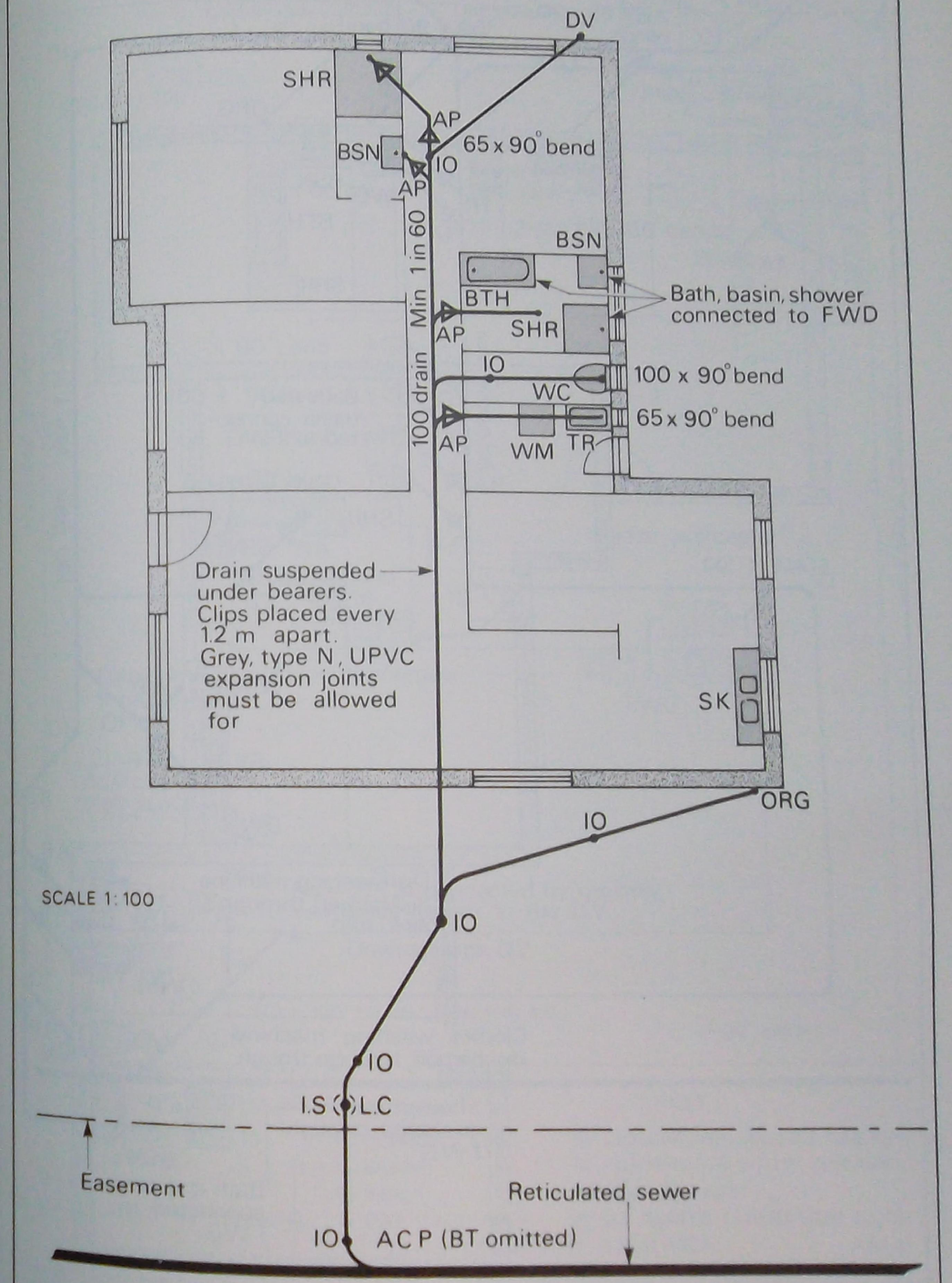

PLAN Nº 2

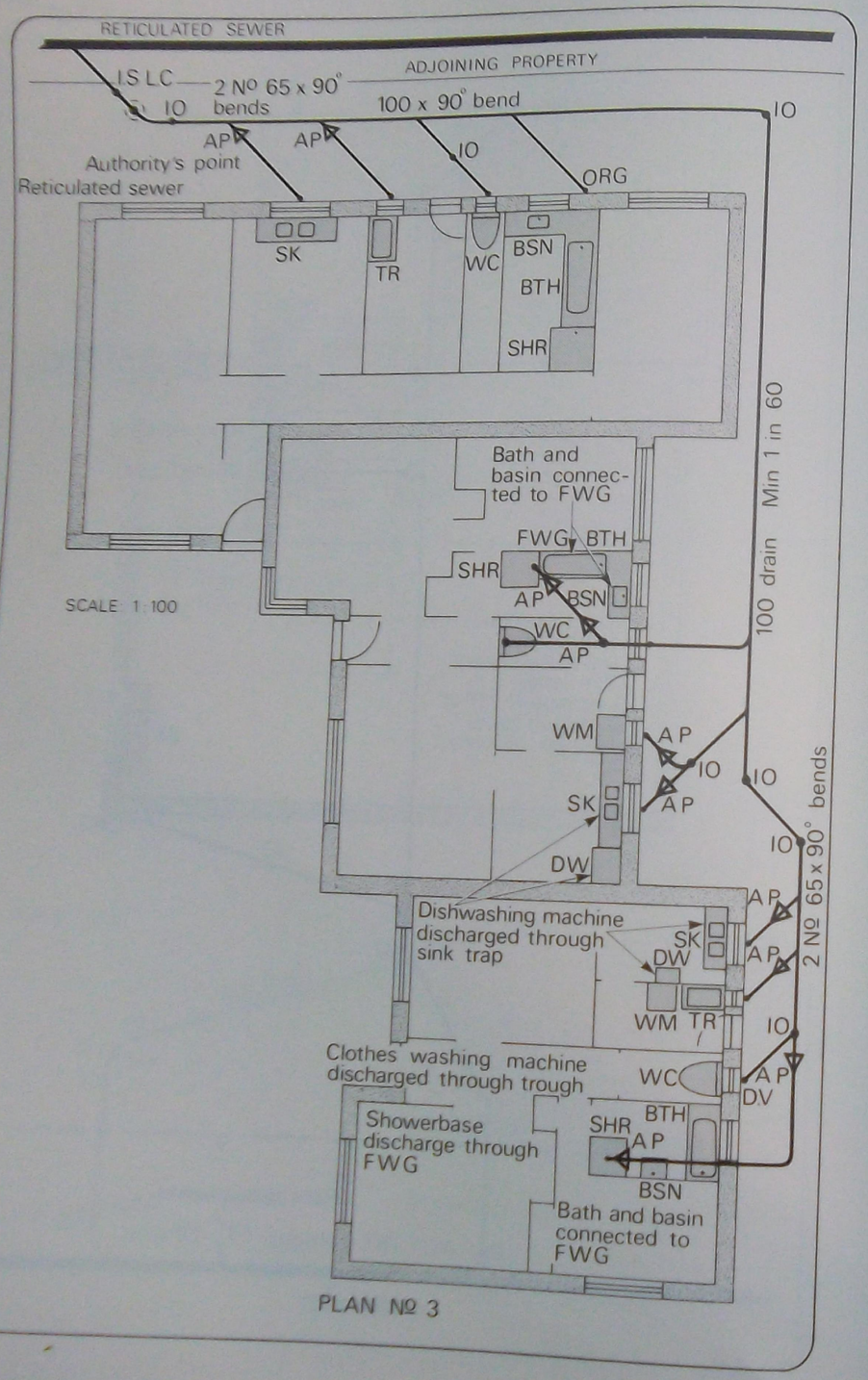

PLAN No 3

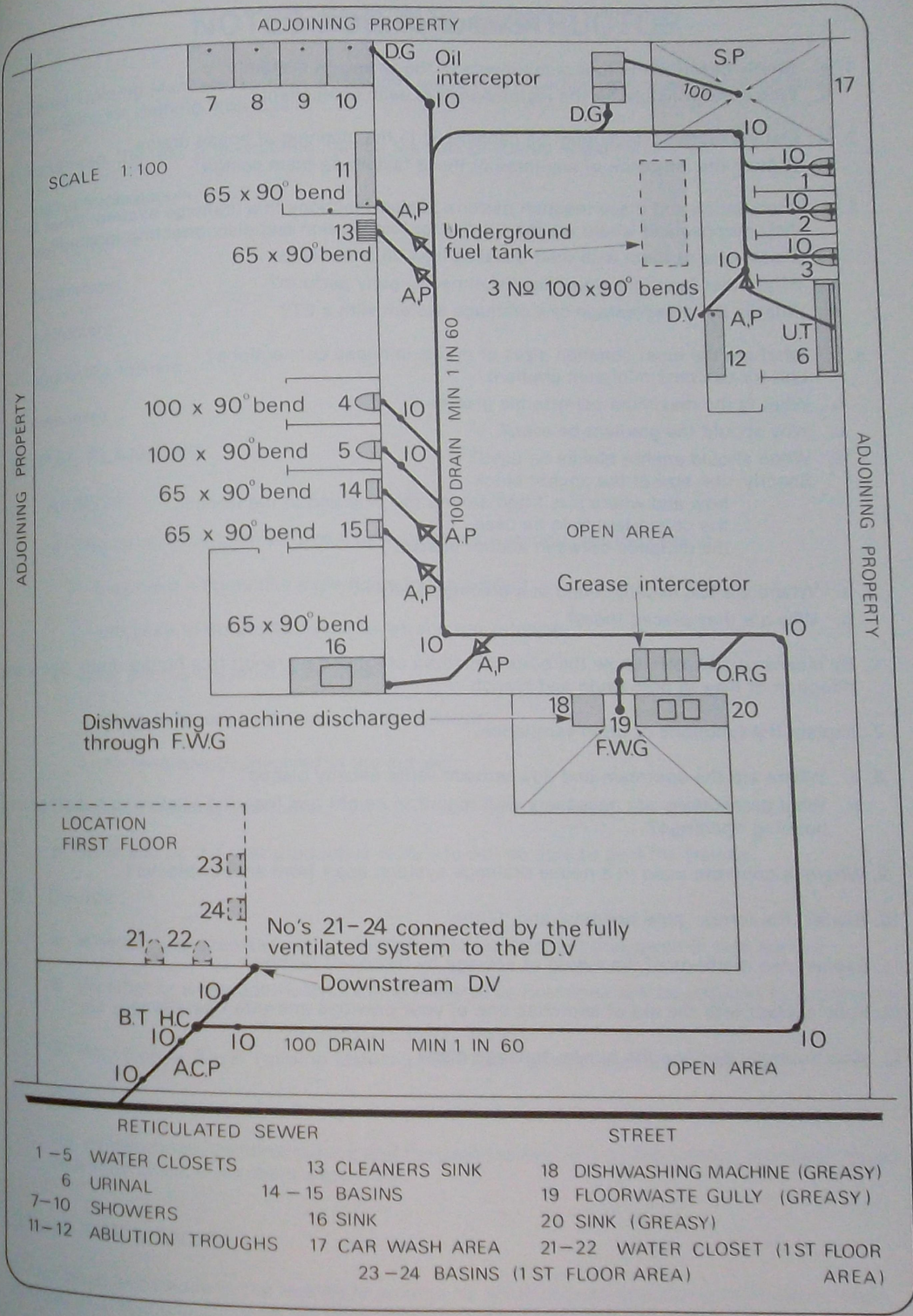

1–5 WATER CLOSETS
6 URINAL
7–10 SHOWERS
11–12 ABLUTION TROUGHS
13 CLEANERS SINK
14–15 BASINS
16 SINK
17 CAR WASH AREA
18 DISHWASHING MACHINE (GREASY)
19 FLOORWASTE GULLY (GREASY)
20 SINK (GREASY)
21–22 WATER CLOSET (1ST FLOOR AREA)
23–24 BASINS (1ST FLOOR AREA)

REVISION QUESTIONS

1. a. Briefly describe the four components of the sewerage system.
   b. Who is responsible for the maintenance of each component?

2. a. List six factors which must be considered in the planning of house drains.
   b. Explain the influence of any three of these factors on drain design.

3. a. Interception and disconnection perform similar functions in a drainage system. What is their purpose and where are the fittings for interception and disconnection located?
   b. Sketch one of them with their usual fittings on either side.
   c. What other functions does the disconnector gully perform?
   d. What is the disadvantage of a drainage system with a BT?

4. a. What are the most common sizes of drains in house connections? List for each the minimum gradient.
   b. What is the maximum permissible gradient?
   c. Why should the gradient be even?
   d. When should anchor blocks be used?
   Specify: the size of the anchor block
   how and where it is fitted around the pipe and in the trench
   the concrete mix to be used
   the distance between anchor blocks.

5. a. Where are IOs usually found in a drainage system?
   b. Why are they placed there?

6. By means of a sketch, show the correct method of joining a branch to a house drain. Show the direction of flow in both drain and branch.

7. Explain the functions of drain ventilation.

8. a. Where are the upstream and downstream vents usually placed?
   b. What precautions are necessary with regard to height and location relative to buildings and building openings?

9. Where is concrete used in a house drainage system, apart from anchor blocks?

10. Explain the terms: 'pipe bedding' and 'filling'.

11. Explain two methods of disposing of sewage by means of pumps.

12. Fully explain with the aid of sketches one of your previous answers operations.

13. Who normally designs the house drainage plan?

NOTES FOR THE INSTRUCTOR

In these Training Manuals the term 'instructor' refers to any person who may train or be directly responsible for training individuals.

For example, the task of instructing may be the sole or shared responsibility of:

— skilled tradespeople

— leading hands

— supervisors

— instructors

— apprentice trainers

— managers

INITIAL PLANNING

A Analyse:

- The training requirements of a newcomer, considering that the person:

  —may have no previous experience in the subject;

  —will need to do productive work as soon as possible.

- What the trainee must learn about:

  —the tools he or she is to use for the subject;

  —the terminology involved in the subject;

  —basic working methods.

- What will be the first productive work you will be able to give the trainee.

B Decide:

- Whether your trainees need information to supplement that given in this manual.
- Whether or when additional training material or exercises will be required to improve on the skill gained.
- Which other Basic Training Manuals the trainee should use during training.

C Plan:

The explanations, demonstrations and the practice required by the trainee, preferably on an individual basis, if numbers allow.

USING THE MANUAL

It may be of assistance to the trainee to arrange for short periods of learning followed by short periods of practice in applying the knowledge gained.

To keep interest alive, it will be useful to relate, as much as possible, the material treated in this manual with actual practical applications in the field.

PRACTICAL EXERCISES AND PROJECTS

There may be areas and tasks in actual situations where the developing skills of the trainee can be put to effective productive use at any stage during the period he or she is learning the subject. Such possibility should be carefully considered and used to the full for the trainee's benefit as well as that of the firm.

Give the trainee as many opportunities as possible to use the whole range of hand tools on suitable small jobs to enable him or her to acquire quickly the manual dexterity required.

Small projects and exercises to suit particular work situations may be devised, but they must take into consideration the limits of skill and knowledge of the trainee.

Whatever form of exercise is used to develop practical skill, it must be carefully planned. A suggested course of instruction is:

- Prepare the working area, the materials and the hand tools to be used.
- Make the aim of the project clear to the trainee.
- State how you intend to assess the proficiency of the trainee.
- Stress key points in the project, paying particular attention to safety precautions.
- Explain clearly and thoroughly any new steps in the project.
- Check that the trainee can use the hand tools correctly.
- Assess the finished project, record the results and discuss with the trainee your appraisal of his performance.
- If you are satisfied with his performance, direct the trainee to the next exercise or project.

TRAINING RECORDS

Simple training records will help in planning systematic training.

Record:

- the parts of the manual learnt by the trainee;
- your assessment of the general skills developed;
- the practical exercises undertaken and completed.

Use your record to measure the trainee's performance and to assess his or her readiness for undertaking actual operations.

Draw up a simple record card to suit your needs.

Using records helps to pinpoint the trainee's strengths and weaknesses. They ensure that training in essential skills is not missed. Training records can be used to help co-ordinate on-the-job training and technical school learning. Where trainees have to serve a probationary period, records assist when the trainee's progress is being assessed.

PUBLICATIONS IN BASIC TRAINING MANUALS — SANITARY PLUMBING

Title	
10.1	SANITARY PLUMBING — INTRODUCTION
10.2	SANITARY PLUMBING — DRAINAGE PIPES & VENTS
10.3	SANITARY PLUMBING — INSTALLING FIXTURES & VENTS
10.4	SANITARY PLUMBING — CONNECTION SYSTEMS & SPECIAL DISPOSAL

OTHER PUBLICATIONS IN BASIC TRAINING MANUALS
(Available at date of printing)

FITTING SERIES	10 MANUALS
WORKSHOP SAFETY	1 MANUAL
PRACTICAL GEOMETRY	3 MANUALS
LATHE WORK	7 MANUALS
SHAPING AND SLOTTING	3 MANUALS
GRINDING	3 MANUALS
MILLING	4 MANUALS
ARC WELDING	4 MANUALS
SOLDERING	1 MANUAL
WATER SUPPLY	4 MANUALS
ROOF PLUMBING	6 MANUALS
BRICKLAYING	2 MANUALS
CARPENTRY AND JOINERY	16 MANUALS
PAINTING AND DECORATING	10 MANUALS
ELECTRICAL	13 MANUALS
MOTOR VEHICLES	10 MANUALS (MORE IN PREPARATION)
PANEL BEATING	3 MANUALS (MORE IN PREPARATION)
VEHICLE PAINTING	3 MANUALS
FURNITURE REMOVAL	4 MANUALS
TIMBER TECHNOLOGY	1 MANUAL
SHEET METAL	(2 MANUALS IN PREPARATION)
ELECTRICAL AND ELECTRONIC SAFE PROCEDURES	1 MANUAL

Information is available at your local Department of Employment, Education and Training regional offices.

These manuals are available from Commonwealth Government Bookshops.

Mail orders to: Mail Order Sales, Australian Government Publishing Service, P.O. Box 84, CANBERRA, A.C.T. 2601.

Australian Standards for

PLUMBING STUDENTS

Part 1: Trade Course

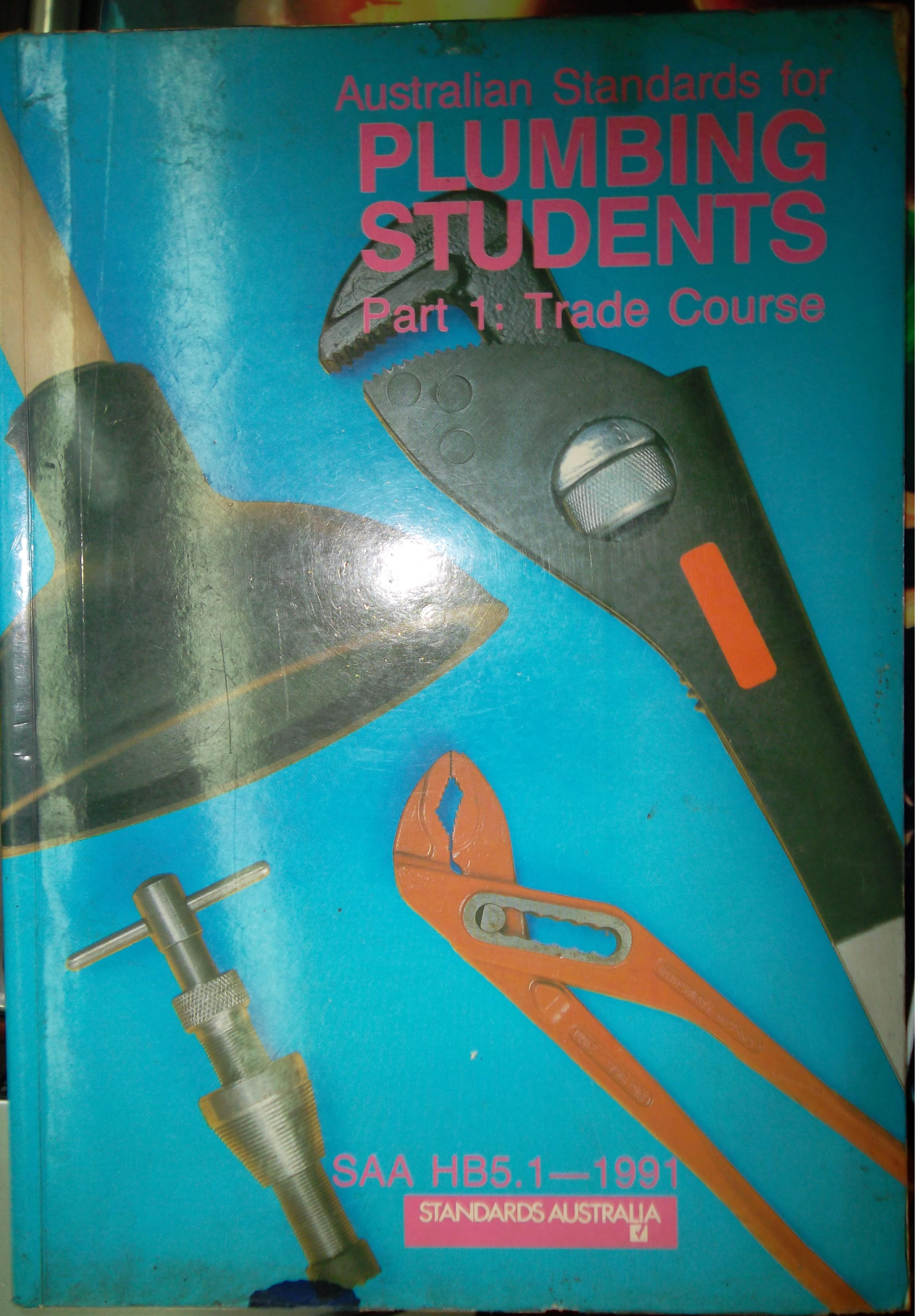

SAA HB5.1—1991

STANDARDS AUSTRALIA

AUSTRALIAN STANDARDS FOR PLUMBING STUDENTS

Part 1: Trade Course

SAA HB5.1—1991

THIS HANDBOOK MUST NOT BE USED FOR ANY PURPOSE OTHER THAN STUDENT INSTRUCTION. STANDARDS AUSTRALIA DOES NOT ACCEPT LIABILITY FOR ANY CONSEQUENCES THAT MAY ARISE FROM THE USE OF THIS HANDBOOK IN LIEU OF THE STANDARDS FROM WHICH THE EXTRACTS HAVE BEEN TAKEN.

First published as part of SAA HB5—1985.
SAA HB5—1985 revised and redesignated in part as SAA HB5.1—1991.

Published 18 February 1991.

PUBLISHED BY STANDARDS AUSTRALIA
STANDARDS HOUSE, 80 ARTHUR ST, NORTH SYDNEY, N.S.W.

ISBN 0 7262 6641 8

INTRODUCTION

This second edition of the Handbook Australian Standards for plumbing Standards, which was first published in 1985, will comprise the following:

(a) Part 1—1991: *Trade course* (this Part); and

(b) Part 2—1991: *Advanced certificate plumbing technology*.

The handbook permits, at reasonable cost, access by both students and instructors to appropriate extracts from relevant Australian Standards.

Students enrolled in any of the plumbing courses are required to purchase a copy of the current Australian Standard, National plumbing and drainage code, Part 0: Glossary of terms (AS 3500.0).

This handbook was prepared by Standards Australia in collaboration with plumbing representatives from the Department of Technical and Further Education, New South Wales and the National Building and Construction Industry Training Council Limited. Although it is not an Australian Standard, the handbook provides students with an introduction to and understanding of Australian Standards.

The extracts contained in this Part of the handbook were selected to familiarize trade course students with the requirements of relevant Australian Standards and the restrictions imposed on persons working in the plumbing industry.

The Standards from which the extracts are taken are subject to amendment and periodical review, therefore the currency of a particular extract should be checked by comparing the date of publication of this handbook with the year of publication of the Standard, or the month and year of publication of any amendment thereto, as shown in the Standards Australia annual Catalogue and the current Addendum to the Catalogue.

THIS HANDBOOK MUST NOT BE USED FOR ANY PURPOSE OTHER THAN STUDENT INSTRUCTION. STANDARDS AUSTRALIA DOES NOT ACCEPT ANY LIABILITY FOR ANY CONSEQUENCES THAT MAY ARISE FROM THE USE OF THIS HANDBOOK IN LIEU OF THE STANDARDS FROM WHICH THE EXTRACTS HAVE BEEN TAKEN.

The views of the students and instructors on this handbook will be welcomed by Standards Australia, particularly on the scope of the subjects it covers. These views will be taken into consideration when the handbook is next revised.

CONTENTS

		Page
Chapter 1	Basic skills and safety	5
Chapter 2	Water supply	33
Chapter 3	Waste disposal	48
Chapter 4	Roof plumbing and rainmeter drainage	75
Chapter 5	Gas	91
Chapter 6	Mechanical services	99
Chapter 7	Sprinkling fitting	127

REFERENCES

This handbook contains edited extracts from the following documents:

		Page
AS 1000 —1979	The International System of Units (SI) and its application	25
1100	Technical drawing	
1100.301-1985	Part 301: Architectural drawing	42/70
1100.401-1984	Part 401: Engineering survey and engineering survey design drawing	
1101	Graphical symbols for general engineering	
1101.5—1984	Piping, ducting and mechanical services for buildings	135
1200 —1988	SAA Boiler Code	100
1319 —1983	Safety signs for the occupational environment	18
1345 —1982	Identification of the contents of piping, conduits and ducts	21/34
1432 —1990	Copper tubes for plumbing, gasfitting and draining applications	36
1470 —1986	Health and safety at work—Principles and practices	6
1546 —1990	Small septic tanks	62
1547 —1973	Code of practice for disposal or effluent from small septic tanks	69
1558 —1973	Protective clothing for welders	8
1562 —1980	Design and installation of metal roofing	76
1596 —1989	SAA LP Gas Code	92
1670 —1986	Automatic fire detection and alarm systems—Systems design, installation and commissioning	137
1674	Safety in welding and allied processes	
1674.1—1990	Part 1: Fire precautions	9
1689 —1974	Code of practice for the use and maintenance of portable timber ladders	10
AS 1726 —1981	SAA Site Investigation Code	40
1849 —1976	Identification colours for portable fire extinguishers	17
1851	Maintenance of fire protection equipment	
1851.1—1989	Part 1: Portable fire extinguishers	128
1851.2—1988	Part 2: Fire hose reels	130
1851.3—1985	Part 3: Automatic fire sprinkler systems	131
1851.4—1988	Part 4: Fire hydrant installations	132
1892	Portable ladders	
1892.1—1986	Part 1: Metal	12
2032 —1977	Code of practice of installation of UPVC pipe systems	49

AS 2033	—1980	Installation of polyethylene pipe systems	58
2118	—1982	SAA Code for Automatic Fire Sprinkler Systems	138
2120	—1977	Rules for suction systems for medical use in hospitals	111
2179	—1986	Metal rainwater goods—Specification	80
2180	—1986	Metal rainwater goods—Selection and installation	84
2593	—1990	Boilers—Unattended and limited attendance	115
2896	—1986	Medical gas systems—Installation and testing of non-flammable medical gas pipeline systems	108
3795	—1990	Copper alloy tubes for plumbing and drainage applications	38
CA 56	—1968	Code of recommended practice for the construction of vitrified clay pipelines (up to and including 12-in diameter with flexible or rigid joint systems)	60
CB18		SAA Pressure Piping Code	
CB18	—1967	Part 1: Ferrous piping	102

Chapter 1
Basic skills and safety

This chapter stresses the need for students to acquire a full understanding of—

(a) the terms used in the plumbing industry to define objects, techniques and processes;

(b) the need for uniformity and quality of workmanship;

(c) the colour coding that enables the identification of the contents of piping, conduits and ducts; and

(d) health and safety requirements related to the work place.

Whenever practical Australian Standards are of the performance type, i.e. set requirements to be achieved, rather than prescriptive type, i.e. specify material or methods, or both, to be used to meet the set requirements.

Page

The chapter consists of extracts from Australian Standards relevant to the following topics:

Health and safety—Responsibilities of employers, employees and others
(See AS 1470—1986, Health and safety at work—Principles and practices) 6

Welders—Protective clothing
(See AS 1558—1973, Protective clothing for welders) 8

Welding—General precautions and equipment
(See AS 1674.1—1990, Safety in welding and other processes Part 1: Fire precautions) 9

Portable timber ladders—Safe use
(See AS 1689—1974, Code of practice for the use and maintenance of portable timber ladders) 10

Portable metal ladders
(See AS 1892.1—1986, Portable ladders Part 1: Metal) 12

Portable fire extinguishers—Identification colours
(See AS 1849—1976, Identification colours for portable fire extinguishers) 17

Safety signs
(See AS 1319—1983, Safety signs for the occupational environment) 18

Contents of piping, conduits and ducts—Identification
(See AS 1345—1982, Identification of the contents of piping, conduits and ducts) 21

SI Units—Application
(See AS 1000—1979, The International System of Units (SI) and its application). 25

COPYRIGHT

STANDARDS AUSTRALIA

Australian Standard

Health and safety at work—Principles and practices

SECTION 2. RESPONSIBILITIES

2.1 GENERAL. Employers, employees, governments, industry associations and trade unions all have an important role to play in establishing, promoting and maintaining healthy and safe working environments.

Consultation and cooperation between these groups is essential if adequate arrangements are to be made towards the achievement of a healthy and safe working environment.

The appointment of employee safety representatives and the establishment of joint health and safety committees are measures which may facilitate such consultation and cooperation.

The responsibilities described in this Section provide a basis for the development of occupational health and safety policies at the national, state and enterprise levels. The responsibilities specified are not exhaustive and are not exclusive to each group.

2.2 EMPLOYERS. Employers have a responsibility to provide and maintain, so far as is reasonably practicable, healthy and safe working environments and work practices. In addition to complying with legislative provisions, measures for achieving this objective include the following:

(a) Setting out in writing their policy and arrangements in the field of occupational health and safety and bringing this information to the notice of employees in language they readily understand.

(b) Controlling or eliminating hazards at work and, where appropriate, the provision of protective clothing.

(c) Providing adequate supervision of work, of work practices and of the application and use of occupational health and safety measures.

(d) Giving necessary instructions and training, taking account of the functions and capacities of employees.

(e) Providing, where necessary, for measures to deal with emergencies and accidents, including adequate first-aid arrangements, and for rehabilitation.

(f) Verifying the implementation of applicable standards on occupational health and safety regularly, for instance by environmental monitoring, and undertaking systematic audits from time to time.

(g) Keeping such records relevant to occupational health and safety and the working environment as are considered necessary by the competent authority or authorities. These might include records of all notifiable accidents and personal damage which arise in the course of or in connection with work, records of authorization and exemptions under laws or regulations in the field and any conditions to which they may be subject, certificates relating to supervision of the health of employees in the enterprise, and data concerning exposure to specified substances and agents.

Whenever two or more employers or self-employed persons engage in activities simultaneously at one workplace, they each have a responsibility to coordinate and conduct those activities in such a way as will ensure, so far as is reasonably practicable, that nothing about the manner in which each business is conducted makes it unsafe or a risk to the health or safety of not only their own employees but also persons not in their employment.

2.3 EMPLOYEES. Employees have a responsibility in the course of performing their work to:

(a) take reasonable care for their own safety and that of other persons who may be affected by their acts or omissions;

(b) cooperate in the fulfilment of the obligations placed upon their employer;

(c) comply with instructions given for their own health and safety and those of others and with health and safety procedures;

(d) use safety devices and protective equipment correctly and not render them inoperative;

(e) report forthwith to their immediate supervisor any situation which they have reason to believe could present a hazard; and

(f) report any accident or injury to health which arises in the course of or in connection with their work.

2.4 GOVERNMENTS. Governments have a responsibility to—

(a) promote improvements in the quality of the working environment, including safe and healthy work practices and workplaces;

(b) consult with employer and employee organizations prior to the introduction of legislation;

(c) enact legislation concerning occupational health and safety and the working environment which is consistently and effectively enforced by an adequate and appropriate system of inspection and which includes penalties for breaches of the laws and regulations;

(d) cooperate in the adoption, so far as is practicable, of uniform standards for safe and healthy working environments and work practices;

COPYRIGHT

(e) provide guidance to employers and employees to help them comply with legal obligations;

(f) co-ordinate occupational health and safety activity;

(g) undertake and stimulate education, research, and training;

(h) monitor the health of people in the workplace, including the incidence and prevalence of work-related injuries and disease; and

(j) collect, compile, evaluate, and disseminate information on—

(i) working environment;

(ii) occupational health and safety statistics, principles, practices and standards; and

(iii) occupational hazards and the means to eliminate or control them.

2.5 TRADE UNIONS. Trade unions and employee associations have a responsibility to:

(a) identify the health and safety problems for occupations of their members;

(b) communicate these problems to their members, individual enterprises and industry associations.

(c) cooperate with and assist government, employer, and industry associations in developing preventive strategies in occupational health and safety.

2.6 DESIGNERS, MANUFACTURERS, IMPORTERS, AND SUPPLIERS. Designers, manufacturers, importers, and suppliers have a responsibility to ensure, so far as is reasonably practicable, that—

(a) plant, machinery, or equipment is designed, tested, and installed or constructed so as to be free from avoidable risks to health or safety when not misused;

(b) any substance for use at work is free from avoidable risks to health or safety when properly used; and

(c) adequate information is made available about the correct installation and use of machinery and equipment or use of substances and about any condition necessary to ensure that it will be free from avoidable risk to health or safety when properly used.

2.7 INDUSTRY ASSOCIATIONS. Industry associations have a responsibility to—

(a) identify health and safety problems within the enterprises of their members, or in enterprises within the same industry or utilizing similar substances or processes;

(b) communicate these problems to their members, and other enterprises within the same industry; and

(c) assist in the identification of countermeasures and to communicate such information to members and other enterprises within the same industry.

COPYRIGHT

STANDARDS AUSTRALIA

Australian Standard
Protective clothing for welders

3 DESIGN AND CONSTRUCTION.

3.1 General. Because of the risk of spatter and of molten metal passing through openings or being retained by the protective clothing, garments shall be designed and constructed to comply with the following requirements:

(a) *Pockets.* Where pockets are provided they shall be internal opening inside the garment.

(b) *Cuffs.* Turn-back cuffs shall not be used.

(c) *Neck.* Jackets shall be capable of being fastened to give protection to the neck.

(d) *Fasteners.* Fasteners shall be sure. They shall permit rapid removal of the clothing in case of emergency. Slide fasteners shall not be used.

Metal fasteners shall be of a corrosion-resistant material or shall be treated to provide protection such that when tested by the method described in Appendix A they will be smooth and free from oxidation when inspected by the naked eye of a trained observer.*

Straps shall be of the quick-release type and positive in action.

Rivets shall be of a corrosion-resistant material or shall be treated to provide protection at least equal to the requirements of Appendix A.*

Metal fasteners and rivets shall be so incorporated in the protective clothing that they do not come into direct contact with the skin.

(e) *Thread.* Thread shall be inherently fire-resistant or be so treated that it will not smoulder back along the seam when ignited.

*PUBLISHING NOTE Appendix A is not included in this extract.

COPYRIGHT

STANDARDS AUSTRALIA

Australian Standard
Safety in welding and allied processes

Part 1: Fire precautions

SECTION 2. GENERAL PRECAUTIONS

2.8 PROTECTION OF TIMBER. Where any hot work is to be carried out adjacent to or above timber, the timber shall be protected, by wetting or other suitable means, from the direct heat of any flame or arc and from sparks, slag, and hot metal particles.

2.9 PROTECTION OF ROPE. During hot work, ropes shall be protected from the heat of any flame or arc and from sparks, slag, and hot metal particles. Particular care shall be exercised with respect to ropes supporting loads, guy ropes, and scaffolding ropes.

NOTE: Natural or synthetic fibre ropes should not be used for supporting scaffolding when hot work is being carried out.

2.11 PRECAUTIONS AGAINST GRASS AND BUSHFIRES. Before hot work commences near dry grass or bush, the immediate area shall be cleared or wetted sufficiently to prevent the starting of a grass or bushfire.

SECTION 4. HOT WORK EQUIPMENT

4.2 GAS CUTTING, HEATING, AND WELDING EQUIPMENT. Gas cutting, heating, and welding equipment shall be installed and used in accordance with the recommendations of the manufacturer of the equipment and at such pressures and in such a manner as will prevent flashback. Leaky or faulty equipment shall not be used.

NOTE: Use of flashback arresters is recommended.

Acetylene and LP gas cylinders shall be secured in an upright position during use and storage (full or empty). Care shall be taken that gas cylinders, equipment, and hoses are not damaged by inadvertent bumping, abrasion, contact with sharp metal edges or hot metal particles, or exposure to flame or artificial heat.

When gas welding or cutting is suspended for a substantial period of time, such as during lunch periods or overnight, the blowpipe and cylinder valves shall be closed and the regulator adjusting screws released.

4.3 LIGHTING OF BLOWPIPES. Suitable means, e.g. flint gun, shall be provided for the lighting of gas welding, cutting, or heating blowpipes. Rope wicks and other smouldering matter shall not be used.

COPYRIGHT

STANDARDS AUSTRALIA

Australian Standard

Code of practice for the use and maintenance of portable timber ladders

1 SCOPE. This code sets out recommended safe practices for the use and maintenance of portable timber ladders, including step-ladders and trestle-ladders.

2 REQUIREMENTS FOR LADDERS. Only portable ladders complying with AS 1688 should be used.

Ladders made by fastening cleats across, or by fastening rungs through a single stile should not be used.

No attempt should ever be made to extend the designed length of a ladder by lashing or otherwise joining to it another ladder; proper single or extension ladders, capable of reaching the necessary height should be used at all times.

3 GENERAL PRINCIPLES. The following general principles should be observed:

(a) Choose the type of ladder appropriate to the task.

(b) Check that the ladder is in a sound condition.

(c) See that the ladder is placed in a safe working position and is used in accordance with the specific rules hereunder.

4 HANDLING OF LADDERS.

4.1 Transport. During transport on vehicles, ladders should be adequately supported to avoid sagging and be securely fastened in position to minimize chafing and the effects of road shock.

4.2 Care in Handling. Every precaution should be taken when a ladder is being raised, lowered or carried, to avoid bumping workmen or objects and to ensure that the ladder is kept under the control of those who are handling it. This is especially important in windy conditions.

5 PLACEMENT AND LOCATION OF LADDERS.

5.1 Angle of Inclination. Single ladders, extension ladders and domestic extension step-ladders (where used as extension ladders) should be so placed that the horizontal distance between the vertical projection of the top support and the foot of the ladder is approximately one-quarter of the supported length of the ladder. For example, in placing a 6 m ladder against a vertical wall, the foot of the ladder should be about 1·5 m away from the wall.

5.2 Footing. The ladder should be placed on a level and firm footing, and lashed if necessary. Where lashing is impracticable, other effective precautions shall be taken, so that there will be no risk of the ladder moving.

5.3 Securing and Support for Top of Ladder. If a ladder is placed against framing or against brittle material such as asbestos cement, a board should be provided across the stiles at the top to distribute the load. The top of the ladder should be secured in position, as soon as practicable, by hooks, chains or other approved means.

5.4 Step and Trestle-ladders. Step and trestle-ladders should be used in the fully spread position only.

5.5 Height above Landing. The top of any single or extension ladder should be at least 1 m above the place of landing.

5.6 Near Door Openings. If a ladder has to be used at a doorway, the door should be blocked open or locked closed, or a person should be placed on guard at the foot of the ladder.

5.7 Electrical Hazards — Wire-reinforced Ladders. A wire-reinforced ladder should not be used where any electrical hazard exists.

COPYRIGHT

5.8 Very Hot Conditions. A timber ladder should not be placed where it may be subjected to prolonged exposure to temperatures in excess of 66°C or flame.

6 MOVEMENT ON LADDERS.

6.1 Moving on a Ladder. A person moving on a ladder should face the ladder and should have both hands free with which to grip the ladder.

6.2 Number of Persons on a Ladder. Normally only one person should be on a ladder. Emergency conditions may make it necessary for a second person to be on the ladder. In these circumstances the ladder should be inclined at a steeper angle than recommended in Rule 5.1, and only one person should move at any time. Ladders used in these circumstances should be lashed in position.

6.3 Number of Ladders for Ascending and Descending. Where frequency of traffic or other special conditions so warrant, separate ladders should be provided for ascending and descending.

7 WRONG USE OF LADDERS.

(a) No ladder except a trestle-ladder should be used to support a plank.

(b) Single ladders, extension ladders, and extension step-ladders (where used as extension ladders) should only be used for access.

(c) The top of any step-ladder should not be used as a step or tread.

8 PAINTING OF LADDERS. Ladders should not be coated with an opaque paint system, except the minimum necessary for identification or warning, and then only on the outer face of the stiles.

9 INSPECTION AND MAINTENANCE.

9.1 Maintenance. Ladders should be maintained in a good condition, clean and free from splinters. Rung and tread joints should be tight and fittings should be securely attached. Pulleys should be lubricated and all moving parts should operate freely without bending or play. Ropes showing signs of wear or fraying should be replaced.

9.2 Inspection. All ladders in continuous use should be inspected at least monthly. Ladders used infrequently should be inspected at least once in every 12 months. The purpose of the inspection should be to detect structural defects such as shakes in the timber, loose rungs or treads, twisting and racking, evidence of termites, borers and decay, and also corrosion of metal parts.

NOTE: The frequency of inspection of ladders will depend on the manner of their use. The periods mentioned above are given only as a general guide. Where ladders are issued from stores for extended use, it may be appropriate to have a system of inspection on return to store.

9.3 Defective Ladders. Ladders with broken or missing treads or rungs, or with broken or damaged stiles, or with any other defects which would render them unsafe, should be taken out of service and conspicuously labelled 'Dangerous — Do Not Use', pending repair or destruction.

10 STORAGE. Ladders should be stored in well ventilated places protected from the weather. Places which are damp or subject to extremes of temperatures should not be used. The storage place should provide easy access for inspection or removal of ladders.

Ladders stored horizontally should be supported at a sufficient number of points throughout their length to prevent sagging and the development of permanent set. Ladders should not be supported at the ends only.

COPYRIGHT

STANDARDS AUSTRALIA

Australian Standard
Portable ladders

Part 1: Metal

SECTION 1. SCOPE AND GENERAL

1.1 SCOPE. This standard sets out safety requirements for the design and manufacture of portable metal ladders.

The standard provides for two duty ratings of ladders, viz Industrial Ladders and Domestic Ladders, which are assigned minimum load ratings.

The standard covers single and multiple-section ladders, combination ladders, and those special-purpose ladders defined in Clause 1.5.

1.5 DEFINITIONS. For the purpose of this standard, the following definitions apply (see also Fig. 1.1):

1.5.1 Portable metal ladder—a readily movable appliance consisting of metal stiles (see Clause 1.5.12) joined at regular intervals by cross-pieces called rungs or treads (see Clause 1.5.13), on which a person may stand or step in ascending or descending.

1.5.2 Domestic ladder—a ladder used by a householder for maintenance and repairs carried out by himself around his own dwelling.

1.5.3 Industrial ladder—any ladder other than a domestic ladder.

1.5.4 Single ladder—a non-self-supporting portable ladder, of fixed length, consisting of one section.

1.5.5 Extension ladder—a non-self-supporting portable ladder consisting of two or more sections travelling in guides or brackets arranged in order to permit adjustment of working length.

1.5.6 Single-sided step ladder—a self-supporting portable ladder, of fixed length, with flat treads for ascent and descent and a hinged back not intended for ascent or descent. Variations in designs of single-sided ladders include the following:

(a) *Platform step ladder*—a single-sided step ladder with a specially designed substantial platform fitted between the front and back sections (stiles and back legs) near the top to provide a working area.

(b) *Dual-purpose step ladder*—a single-sided step ladder the back section of which is fitted with rungs and which can support the front section, and which can be further adjusted to provide an extension of the front section as a non-self-supporting portable ladder (in the extended position).

1.5.7 Double-sided step ladder—a self-supporting portable ladder of fixed length with two pairs of stiles which are—

(a) hinged or fixed; and

(b) each fitted with treads for ascent and descent.

1.5.8 Trestle ladder—a self-supporting portable ladder of fixed length, consisting of two sections hinged at the top to form equal angles with the base, each section being provided with cross-bearers, fixed between the stiles, on which a plank or planks may be supported.

1.5.9 Special-purpose ladder—a ladder that represents either a modification or a combination of design or construction features of one or more of the general-purpose ladders defined herein, in order to adapt to special or specific uses.

1.5.10 Maximum working length—

(a) For ladders of adjustable length, the length measured along the stiles, including feet and end caps where fitted, when the ladder is in the fully extended position.

(b) For ladders of fixed length, the overall length measured along the stile, including feet, top and end caps where fitted.

1.5.11 Overlap—the distance with which each section of an extension ladder coincides with its matching section when fully extended.

1.5.12 Stile—a side member that supports the treads or rungs.

NOTE: The terms 'stile', 'side rail', 'string' and 'stringer' are used synonymously in industry. For the purpose of this standard, the term 'stile' is used throughout.

1.5.13 Rungs and treads—cross-pieces joining the stiles and used by a person ascending or descending a ladder.

NOTES:

1. The terms 'rung', 'step', and 'tread' are used in industry. For the purpose of this standard, the term 'rung' is used for single and extension ladders, and the term 'tread' for step ladders. The term 'tread' is also used as a general term where applicable.
2. The terms 'rung', 'tread', and 'step' do not include the top cap.

1.5.14 Top cap—the uppermost horizontal member of a portable step ladder.

1.5.15 Step surfaces—the clear portion of steps, rungs, or treads on which a person may step while ascending or descending a ladder.

1.5.16 Section.

1.5.16.1 *Bottom or base section*—the lowest section of a non-self-supporting portable ladder.

COPYRIGHT

1.5.16.2 *Middle or intermediate section*—the section between the top (fly) and bottom (base) sections of a non-self-supporting portable ladder.

1.5.16.3 *Top or fly section*—the uppermost section of a non-self-supporting portable ladder.

1.5.17 Duty rating—the rating assigned to the ladder, i.e. Industrial or Domestic, which indicates the service capability of the ladder.

1.5.18 Load rating—the maximum load rating of the ladder.

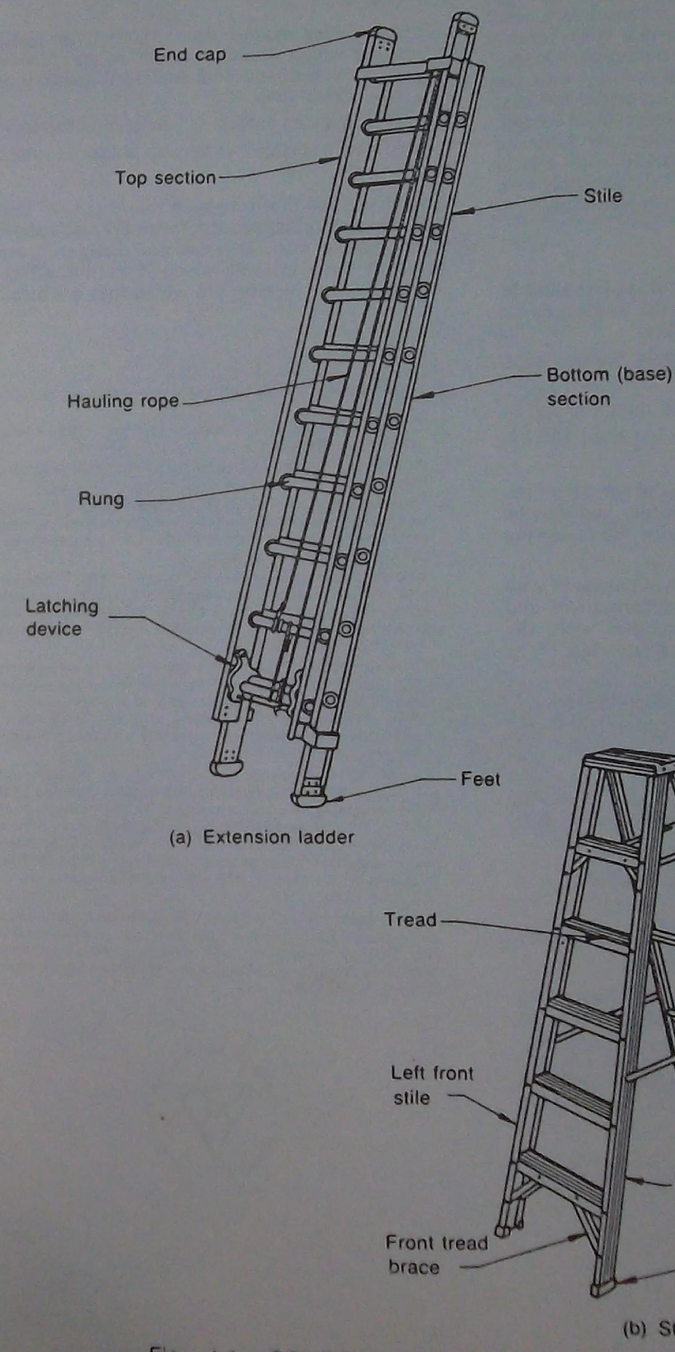

Fig. 1.1. COMPONENTS AND TERMS RELATIVE TO LADDERS

COPYRIGHT

SECTION 2. GENERAL REQUIREMENTS

2.1 DESIGN AND CONSTRUCTION. The ladder shall comply with the relevant requirements of this standard, with the relevant requirements of the structural code appropriate to the material used, and shall be free from structural defects that might render the ladder hazardous to the user. In particular, a ladder which is marked 'Industrial' shall comply with the requirements of this standard for industrial ladders, and a ladder which is marked 'Domestic' shall comply with the requirements of this standard for domestic ladders. Each ladder which is marked with a load rating in accordance with Clause 2.7 shall comply with the requirements of this standard corresponding with that load rating.

2.2 RATINGS.

2.2.1 Duty rating. Portable metal ladders shall be rated as either Industrial or Domestic in accordance with their designed service capability.

2.2.2 Load rating. Portable metal ladders shall have a load rating of—

(a) for industrial ladders . . not less than 120 kg; or

(b) for domestic ladders . . . . . not less than 100 kg.

2.5 STILES.

2.5.3 Feet. Feet shall be fitted to the bottom of the stiles of the bottom section of the ladder and may be fixed or hung. Feet shall comply with the following requirements:

(a) The feet shall be manufactured from or faced with a material which will resist deformation and slipping, and which will comply with the requirements of Clause 8.4.8 or Clause 8.5.10, as appropriate.

(b) The feet or surfacing material shall be securely fixed to the stiles but may be removable for renewal.

The projected area of ladder feet shall be not less than the area enclosed by the external dimensions of the stile or back leg, as appropriate (see examples in Fig. 2.1).

2.7 MARKING. All ladders shall have the following information permanently marked in a prominent position:

(a) The name of the manufacturer (whether the ladder has been made for sale or otherwise).

(b) In the largest lettering practicable, the duty rating (i.e. 'INDUSTRIAL' or 'DOMESTIC' as appropriate), and the load rating in kilograms.

(c) The working length of the ladder (the closed and maximum working lengths for extension type ladders).

(d) In the largest lettering practicable, the words 'DO NOT USE WHERE ELECTRICAL HAZARD EXISTS'.

(e) On double-sided step ladders, the words 'TO BE USED IN THE FULLY OPEN POSITION ONLY'.

(f) A warning against standing on those treads or rungs which would represent an unsafe working position. Such marking shall warn against standing any higher than—

(i) on a step ladder . . . the second top tread; or

(ii) on a single or extension ladder . . . the third top tread.

Labels used to illustrate such marking shall comply with the requirements of Clause 8.6, be located to guard against wear, abrasion and disfiguring and be attached by a method which does not affect the strength of the members to which they are attached.

NOTES:

1. Labels are not satisfactory unless appropriately located or protected.
3. Examples of labels used to illustrate additional safety warnings are given in Appendix B.
3. Aluminium self-etching paint is suitable for the above markings.
4. Manufacturers who place the number of this Australian standard on metal ladders, on packaging or on literature related thereto should ensure that the products are manufactured to comply with the standard.

Attention is particularly drawn to the scheme for independent assurance provided by the Standards Mark which is a registered certification trade mark owned by the Standards Association of Australia and which is available for use with suitable Australian standards.

The presence of the Standards Mark on or in relation to a product is an assurance that the goods have been produced under a system of supervision, control and testing applied during manufacture and including periodical inspections at the manufacturer's works in accordance with the certification mark scheme of the SAA.

The Standards Mark can be used only by manufacturers licensed under the certification mark scheme operated by the SAA, and only when accompanied by the number of the relevant Australian standard. It will usually be a requirement that the words 'Manufactured to Australian Standard' accompany the number of the standard and enclose the Mark as shown below; however, this is a matter for negotiation with the Association.

Further particulars of the terms of licence and suitability of this standard for certification purposes may be obtained from the Quality Assurance and Certification Department, Standards Association of Australia, 80 Arthur Street, North Sydney, NSW, 2060.



COPYRIGHT

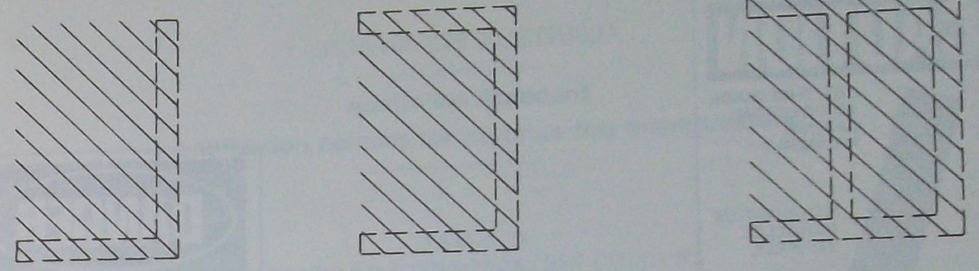

(a) (b) (c)

Fig. 2.1. EXAMPLES OF MINIMUM AREA OF FEET (HATCHED) FOR DIFFERENT SECTION OF STILE OR BACK LEG

APPENDIX B

EXAMPLES OF LABELS USED FOR ADDITIONAL SAFETY WARNINGS

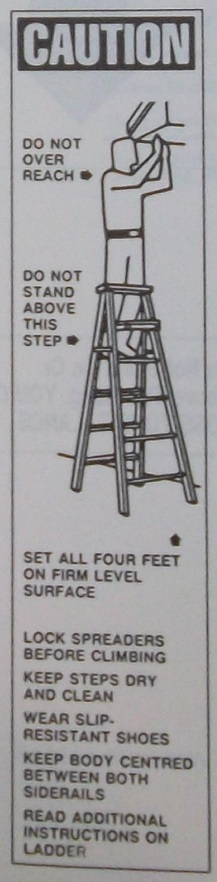

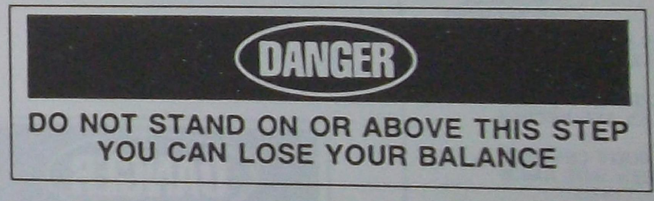

Fig. B2 (in part) TYPICAL SINGLE AND EXTENSION LADDER WARNING LABELS

COPYRIGHT

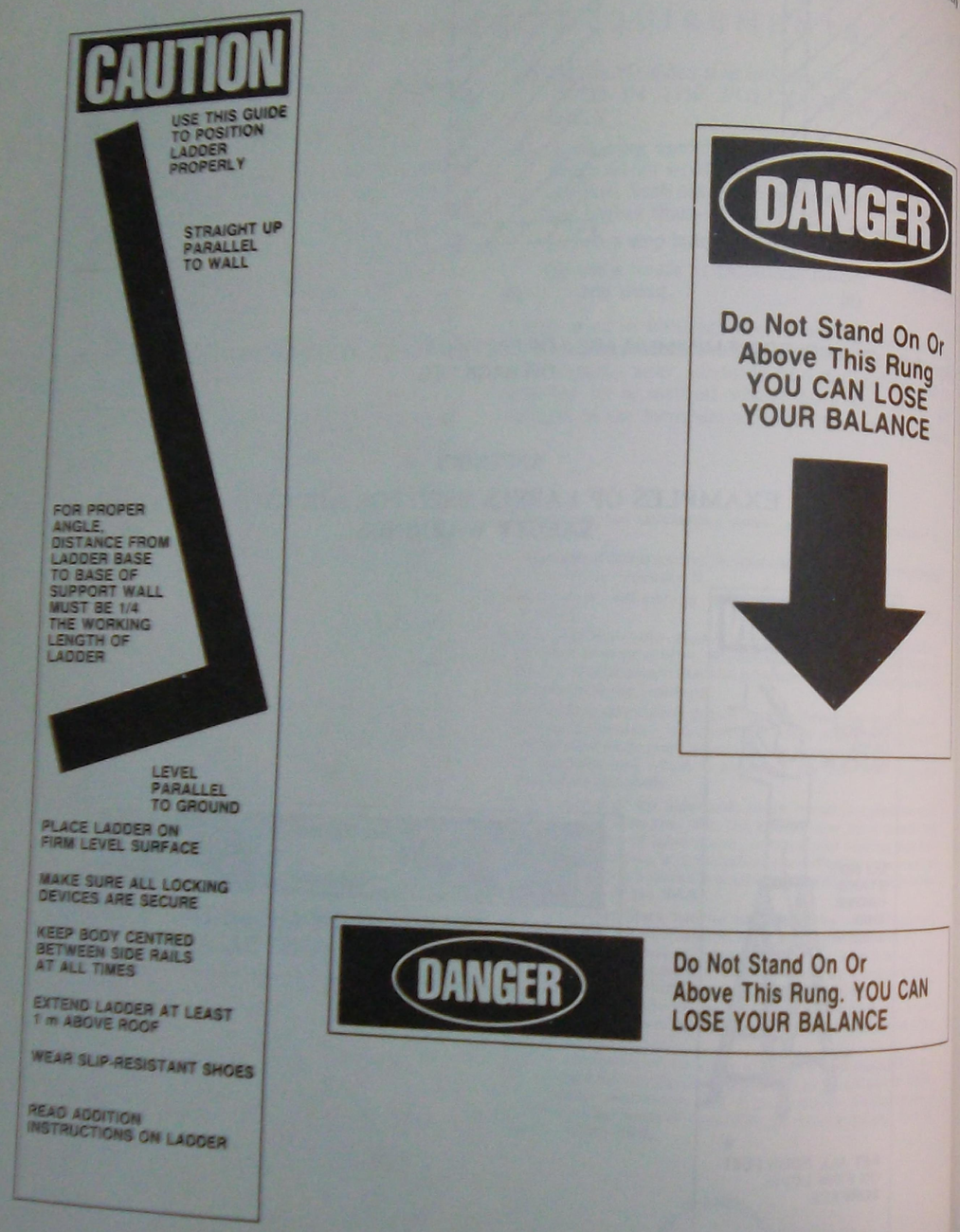

Fig. B2 (in part) TYPICAL SINGLE AND EXTENSION LADDER WARNING LABELS

COPYRIGHT

STANDARDS AUSTRALIA

Australian Standard
Identification colours for portable fire extinguishers

TABLE 1
STANDARD IDENTIFICATION COLOURS FOR PORTABLE FIRE EXTINGUISHERS

Extinguisher		Identification colour		
		Body colour		
Type	Relevant Australian Standard	Name	AS K185 Reference No	Supplementary
Water—Soda Acid	AS 1840	Red	537	—
Water—Gas Container	AS 1841	Red	537	—
Water—Stored Pressure	AS 1842	Red	537	—
Foam—Chemical	AS 1843	Blue	166	—
Foam—Gas Container	AS 1844	Blue	166	—
Foam—Stored Pressure	AS 1845	Blue	166	—
Dry Chemical	AS 1846	Red	537	White
Carbon Dioxide	AS 1847	Red	537	Black
Halogenated Hydrocarbon	AS 1848	Yellow*	356	—

*Halogenated hydrocarbon type extinguishers may be finished in polished brass as an alternative to painting yellow.

COPYRIGHT

STANDARDS AUSTRALIA

Australian Standard

Safety signs for the occupational environment

1.1 SCOPE. This standard sets out requirements for the design and use of safety signs, intended for use in the occupational environment for the purposes of—

(a) prevention of accidents;

(b) identification of health hazards;

(c) location of safety and fire protection equipment; and

(d) giving guidance and instruction in emergency procedures.

NOTE: The purpose of safety signs is to draw attention to objects and situations affecting health and safety. Safety signs do not replace the need for proper accident prevention measures. Explanation of their functions and meanings should be included in employee induction training programs.

TABLE 2.1
COLOURS AND SHAPES FOR SYMBOLIC SAFETY SIGNS

Class of sign	Geometric form of enclosure	Colours	Examples of use
Regulatory signs	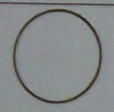	Red and White (Prohibition)	Smoking prohibited Thoroughfare prohibited for pedestrians
		Blue (Mandatory action)	Eye protection must be worn Respiratory protection must be worn Head protection must be worn
Caution (Warning) signs		Yellow	Indications of hazards, viz: Caution, Risk of explosion Caution, Laser beam Caution, Risk of fire
Emergency-related information signs	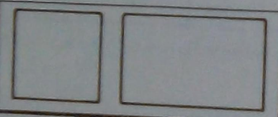	Green	Location of emergency showers Emergency exits
		Red	Location of firefighting equipment

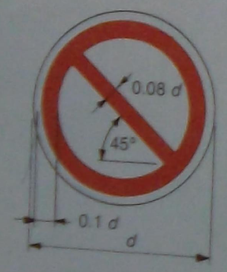

Fig. 3.3 PROHIBITION SIGNS

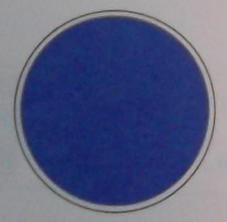

Fig. 3.4. MANDATORY ACTION AND OBLIGATION SIGNS

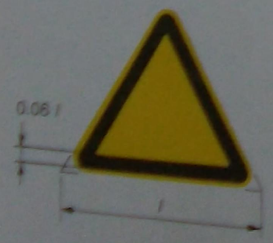

Fig. 3.5 CAUTION SIGNS

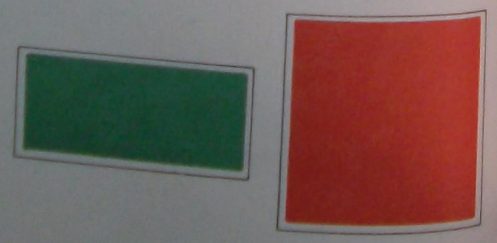

Fig. 3.6. INFORMATION (EMERGENCY-RELATED) SIGNS

COPYRIGHT

TABLE A1
STOP AND PROHIBITION SIGNS

Safety sign and number	Meaning
Background—White *Symbol*—Black *Border and crossbar*—Red A1.1 	Smoking prohibited
A1.2 	Fire, naked flame and smoking prohibited

TABLE A3
EMERGENCY RELATED INFORMATION SIGNS

Safety signs and numbers	Meaning
Background—Green *Symbol*—White	
A3.1 	First aid
A3.4 	Emergency (safety) eye wash
A3.5 	Emergency (safety) shower

COPYRIGHT

TABLE A4
MANDATORY (OBLIGATION) SIGNS

Safety sign and number	Meaning
Background: Blue Symbol: White A421 	Eye protection must be worn
A422 	Head protection must be worn
A424 	Hearing protection must be worn
A426 	Foot protection must be worn

COPYRIGHT

STANDARDS AUSTRALIA

Australian Standard
Identification of the contents of piping, conduits and ducts

FOREWORD

Adoption of ISO/R 508.

In preparing this standard, the committee concerned made a full study of ISO/R 508 and finally decided that it should be accepted as the basis for the standard.

The committee observed that ISO/R 508 had been approved by many ISO member bodies, and that it applied to shipping as well as to land installations. Furthermore, the requirements of ISO/R 508 were considered to possess intrinsic merit, in that the number of colours is reduced to a minimum, and the colours given are sufficiently distinct for practical purposes.

The complexity and variety of marking is much less under ISO/R 508 than under other identification systems that were examined, and it should thus be easier to train personnel to interpret the identification system. The committee felt also that the ISO approach would minimize difficulties of colour perception that may arise from fatigue, colour blindness or faded pigments in paint formulation.

The committee concluded that the benefits to be gained by introducing the ISO system would far outweigh any costs of implementation and would avoid the many possible misinterpretations associated with a complex colour system, particularly when a large number of pipes are in close proximity.

Application of this Standard.

A standard of this kind cannot be expected to satisfy every particular industrial requirement. It is to be regarded as setting out certain desirable principles which should be considered in the planning of a scheme for identification of piping. Individual undertakings may find it necessary to depart from these principles in the application of markings in particular localities, so as to obtain maximum advantage of the identification system. However, this should only be done in extremes where adherence to the general principles cannot possibly be maintained.

Basic Principles of Standard Identification System.

The principles set out in the standard include a general classification of fluids encountered in industry, each class being identified by colour, but with a more detailed identification of the nature and form of contents by words and letter symbols.

The committee observed that every possible circumstance could not be covered, but it noted that there were two common cases which might call for some guidance, viz vacuum pipelines and jacketed pipelines. Under the standard, vacuum pipelines are to be considered on the basis of the fluid they carry and are to bear the marking 'vacuum'. Jacketed pipelines should be identified by the ground colour of the more important material being conveyed, together with the wording 'jacketed pipeline'.

Industrial Safety Colours.

The standard should be applied in a manner consistent with the Australian standards relating to industrial safety colours and warning signs in AS 1318 and AS 1319. The references to the use of 'safety colours' in this standard are related as far as practicable to principles established in those standards. For example, red is related to fire fighting equipment and yellow to cases where caution may be required. In certain instances, however, it has been necessary to give a specific meaning to colours which normally possess some general significance; green is used for water in general. If the water should be contaminated, it would be marked with a cautionary signal, i.e. yellow with black stripes, over the green ground colour. Similar use should be made of the ionizing radiation and biological hazard symbols which in this standard should always be accompanied by the ISO accepted safety colour, i.e. yellow.

Supplementary Marking.

This standard provides for the use of words or letter symbols to indicate the specific nature of contents or their physical state. This implies labelling of the pipeline. The method of labelling is left to the discretion of the person designing an identification system; it may, for example, be carried out by signwriting, by adhesive labels or by other forms of label, and account should be taken of the expected life of the form of labelling used.

In certain fields of industry, there are particular requirements dealing with identification by means of colour. In the application of such requirements, consideration may be given to the possibility of superimposing the required form of identification on the ground colour recommended in this standard.

Examples of such requirements known to exist at the present time are:

Identification of piping in aircraft refuelling depots

Department of Transport, Australia Airport Engineering Instructions, Design and Development, Vol. III, Pt 9, Sect. 23.

Identification of piping within foam houses at bulk oil installations

Department of Industrial Relations, N.S.W. The Dangerous Goods Act 1975, The Dangerous Goods Regulations 1978, AS 1940, S.A.A. Flammable and Combustible Liquids Code, Clause 9.9.23.

Underground and Concealed Services.

The principles of this standard should be applied to the identification of underground and concealed services. However, it is recognized that such application may present difficulties and for this reason no mandatory requirements have been specified.

COPYRIGHT

SPECIFICATION

1 SCOPE. This standard sets out methods of identifying the contents of piping, conduits and ducts by the use of colours, letters and symbols.

2 APPLICATION. The standard applies to piping, conduit, ducts and sheathing used to contain fluids or for the distribution of electrical or communications services in land installations and on board ships.

Although the standard is not intended to apply to buried or normally inaccessible services, the principles should be applied to those services where practical.

NOTE: For the identification of electrical wiring see AS 3000.

3 REFERENCED DOCUMENTS. The following documents are referred to in this standard:

AS 1135	SAA Non-ferrous Pressure Piping Code
AS 1169	SAA Medical Agents and Gases Safety Code
AS 1318	SAA Industrial Safety Colour Code
AS 1319	Rules for the Design and Use of Safety Signs for the Occupational Environment
AS 1596	SAA LP Gas Code
AS 1697	SAA Gas Pipeline Code
AS 1744	Standard Alphabets for Road Signs
AS 1940	SAA Flammable and Combustible Liquids Code
AS 1942	Rules for the Identification of Refrigerant Gas Cylinders
AS 1943	Rules for the Identification of Industrial Gas Cylinders
AS 1944	Rules for the Identification of Medical Gas Cylinders
AS 1958	SAA Submarine Pipeline Code
AS 2018	SAA Liquid Petroleum Pipeline Code
AS 2120	Rules for Suction Systems for Medical Use in Hospitals
AS 2648	Underground marking tape Part 1—non-detectable tape
AS 3000	SAA Wiring Rules
AS CB18	SAA Pressure Piping Code Part 1—Ferrous Piping
AS K185	Colours for Specific Purposes
ISO 3864	Safety Colours and Safety Signs*
ANSI Z35.5	Symbol for Biological Hazard
AIP CP5	Code of Practice for Pipeline Identification

4 DEFINITIONS. For the purpose of this standard, the following definitions apply:

4.1 Basic identification colour—a colour which indicates the basic nature of a service.

4.2 Biological hazard—those infectious agents presenting a risk or potential risk to the well-being of man, either directly through infection or indirectly through disruption of the environment.

4.3 Decorative colour—the colour of a service used for decorative or protective purposes.

4.4 Fluid—a substance consisting of particles that move freely among themselves and which is capable of being conveyed through pipes.

4.5 Gases—fluids in pipelines which are gaseous under normal atmospheric conditions when released.

4.6 Hazard identification—yellow used in conjunction with black to indicate a hazard (either a hazardous service, or a mechanical hazard due to restricted clearances near the pipe).

4.7 Hazardous service—a service, the contents of which present a risk of injury to personnel because of toxicity, biological hazard, corrosiveness, flammability, radioactivity, temperature, pressure or voltage.

NOTE: Within any installation, the definition of a hazard may be a matter of degree.

4.8 Ionizing radiation—any radiation consisting of directly or indirectly ionizing particles or a mixture of both.

4.9 Pipeline marker—a label which is applied to the outside surface of a service to indicate by colour and words printed on it the contents of the service.

4.10 Restricted installation—an installation where access is normally restricted to authorized personnel.

4.11 Service—a pipe, conduit, duct or sheath, the contents of which are to be identified.

4.12 Supplementary colour—a colour or colours additional to a basic identification colour, used to specifically identify a service.

5 BASIS OF IDENTIFICATION.

5.1 General. This standard provides for the identification of services by the use of a basic identification colour only or a basic identification colour with lettering.

In addition, where a service is classified as a hazardous service, provision is made for hazard identification. In certain circumstances, the alternative methods of identification described in Appendix G may be permitted.

5.2 Basic Identification Colour. Basic identification colours, broadly identifying the contents of the service, and the physical characteristics of the colours, together with their meaning, are set out in Table 1.

5.3 Hazardous Service Identification. Where a service is to be marked as being hazardous, it shall have the following marking in black on a yellow background:

(a) Ionizing radiation—the symbol illustrated in Appendix B.

(b) Biological hazard—the symbol illustrated in Appendix C.

(c) Other hazardous services—diagonal lines of equal width and spacing. The reason for the hazard identification may be added in words adjacent to the marking, e.g. temperature, pressure, flammable liquid, voltage, toxicity, actual contents.

*In course of preparation

COPYRIGHT

TABLE 1
PIPELINE IDENTIFICATION COLOURS*

Pipeline identification	ISO colour name†	AS K185	Colour
Water	Green	No 228 Emerald Green	See Publishing Note
Steam	Silver-grey		
Oil—mineral, vegetable or animal Flammable or combustible liquids	Brown	No 414 Golden Brown	
Gases, in either gaseous or liquefied form‡ Vapours and pneumatically conveyed fumes and materials	Yellow-ochre	No 366 Light Beige	
Acids and alkalis	Violet	No 797 Light Violet	
Air	Light Blue	No 112 Arctic Blue	
Other fluids, including drainage pipes unless the drain is to a particular service	Black		
Firefighting materials, including detection and suppression systems (generally in conjunction with other identification of the contents)	Safety Red	No 537 Signal Red	
Hazardous services (generally in conjunction with other identification of the contents, see also Clauses 5.3 and 5.5)	Safety Yellow (in conjunction with black)	No 356 Golden Yellow	
Electricity	Light Orange	No 557 Light Orange	
Communications	White		

*The physical definition of each colour in CIE Standard Colorimetric System of Colour Specification and the Munsell reference are given in Appendix E.

†The ISO colour name given is that used in ISO R 508, with the exception of white and light orange as ISO R 508 does not deal with identification of communications or electrical services.

‡Liquids in pipelines which are gases under normal atmospheric conditions when released.

NOTES

1. Colour is used on many occasions for identifying different qualities or duties of pipes during manufacture. Users of pipe are warned that such markings may be for purposes other than to identify the contents. Where piping with such colour markings is used, the markings should be obliterated to avoid misinterpretation of their meaning.
2. The use by gas supply authorities of the colour canary yellow to identify pipelines containing gas is common practice in Australia. However this standard specifies the colour light beige for this purpose, this being the colour agreed upon for this purpose in ISO R 508.

PUBLISHING NOTE: Colour chips appear in this column in the published standard, but are not reproduced in this extract.

COPYRIGHT

5.4 Direction of Flow. The direction of flow may be indicated by an arrow or arrowhead.

5.5 Supplementary Identification. Lettering, and/or supplementary colours, may be used to further divide the broad classes of service identified by the basic identification colour where any hazard may be created by incorrect identification. Any use of supplementary colours shall comply with the requirements of Appendix G.

6 APPLICATION OF IDENTIFICATION.

6.1 General. It is essential that the identification be readily visible.

Identification colours shall contrast with the background. Where the decorative and identification colours do not contrast, contrast shall be achieved by the provision of a contrasting border to the identification colour. A contrasting border shall also be provided where the identification of the service is located in poor light.

6.2 Location of Identification. Identification markings shall be located adjacent to all junctions, valves, service appliances, bulkheads, wall penetrations and the like and at spacings not greater than 8 m along the service, except that for uninterrupted lengths of external services, visible along their length, the spacing of identification shall not exceed 50 m (see Appendix D).

APPENDIX D

DETAILS OF LOCATION OF MARKINGS

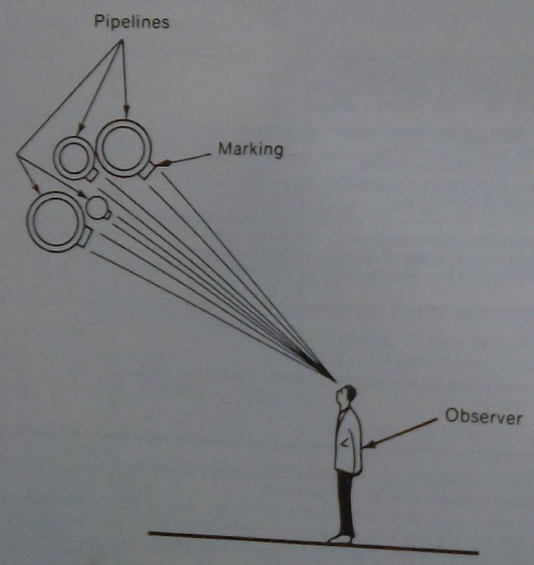

Fig. D5. LOCATION OF MARKINGS TO ENSURE VISIBILITY TO OBSERVER

COPYRIGHT

STANDARDS AUSTRALIA

Australian Standard

The International System of Units (SI) and its application

3 BASE UNITS. The base units of SI, together with their definitions and symbols, are given in Table 1.

4 SUPPLEMENTARY UNITS. In the SI, the quantities plane angle and solid angle are treated as independent quantities with the units radian and steradian respectively. These are described as supplementary units.

TABLE 1

BASE UNITS

Quantity	Name of unit	Symbol	Definition of unit
length	metre	m	The metre is the length equal to 1 650 763.73 wavelengths in vacuum of the radiation corresponding to the transition between the levels $2p_{10}$ and $5d_5$ of the krypton-86 atom.
mass	kilogram	kg	The kilogram is the International kilogram being the mass of the cylinder that is deposited in the International Bureau of Weights and Measures and was declared by the First General Conference on Weights and Measures held in Paris in the year 1889 to be the International Prototype Kilogram.
time	second	s	The second is the duration of 9 192 631 770 periods of the radiation corresponding to the transition between the two hyperfine levels of the ground state of the caesium-133 atom.
electric current	ampere	A	The ampere is the unvarying electric current that, when flowing in each of two parallel straight conductors of infinite length of negligible circular cross-section separated by a distance of one metre from each other in free space, produces between those conductors a force equal to 0.000 000 2 newton per metre length of conductor.
thermodynamic temperature	kelvin (Note 1)	K	The kelvin, unit of thermodynamic temperature, is the fraction 1/273.16 of the thermodynamic temperature of the triple point of water.
amount of substance	mole (Note 2)	mol	The mole is the amount of substance of a system which contains as many elementary entities as there are atoms in 0.012 kg of carbon-12.
luminous intensity	candela	cd	The candela is the luminous intensity in the perpendicular direction of a surface of 1/600 000 of one square metre of a black body at the temperature of solidification of platinum under a pressure of 101 325 pascals.

NOTES TO TABLE 1:

1. The unit kelvin and its symbol K is also used to express an interval or a difference in temperature.
   In addition to the thermodynamic temperature (T) expressed in kelvins, use is also made of Celsius temperature (t) defined by the equation
   $$t = T - T_0$$
   where $T_0 = 273.15$ K by definition.
   The Celsius temperature is in general expressed in degrees Celsius (symbol °C). The unit 'degree Celsius' is thus equal in magnitude to the unit 'kelvin' and an interval or a difference of Celsius temperatures may be expressed in kelvins or degrees Celsius.
   The temperature of the triple point of water is 273.16 K, i.e. 0.01 °C.
2. When the mole is used the elementary entities must be specified and may be atoms, molecules, ions, electrons, other particles, or specified groups of such particles.

COPYRIGHT

5 **DERIVED UNITS.** Derived units are expressed in terms of base units and/or supplementary units. Symbols for derived units are obtained by associating the symbols for base and/or supplementary units algebraically using, as appropriate, the mathematical signs of multiplication and division. See Clause 9 for details and examples.

Derived units may be divided into three classes as described below; examples of each are given in Tables 3, 4 and 5 respectively.*

(a) units derived from base and supplementary units (other than those in (b) and (c) below) (see Table 3);

(b) derived units having special names (see Table 4);

(c) units derived from derived units having special names and from base and supplementary units (see Table 5).

*PUBLISHING NOTE: Table 5 is not included in this extract.

TABLE 3

SOME UNITS DERIVED FROM BASE AND SUPPLEMENTARY UNITS

Quantity	SI unit	
	Name	Symbol
acceleration	metre per second squared	m/s^2
angular acceleration	radian per second squared	rad/s^2
angular momentum	kilogram metre squared per second	$kg.m^2/s$
angular velocity	radian per second	rad/s
area	square metre	m^2
coefficient of linear expansion	1 per kelvin	1/K
concentration (of amount of substance)	mole per cubic metre	mol/m^3
current density	ampere per square metre	A/m^2
density	kilogram per cubic metre	kg/m^3
diffusion coefficient	square metre per second	m^2/s
electric current density	ampere per square metre	A/m^2
exposure rate (ionizing radiation)	ampere per kilogram	A/kg
kinematic viscosity	square metre per second	m^2/s
luminance	candela per square metre	cd/m^2
magnetic field strength	ampere per metre	A/m
magnetic moment	ampere metre squared	$A.m^2$
mass flow rate	kilogram per second	kg/s
mass per unit area	kilogram per square metre	kg/m^2
mass per unit length	kilogram per metre	kg/m
molality	mole per kilogram	mol/kg
molar mass	kilogram per mole	kg/mol
molar volume	cubic metre per mole	m^3/mol
moment of inertia	kilogram metre squared	$kg.m^2$
moment of momentum	kilogram metre squared per second	$kg.m^2/s$
momentum	kilogram metre per second	kg.m/s
rotational frequency	1 per second	1/s*
specific volume	cubic metre per kilogram	m^3/kg
speed	metre per second	m/s
velocity	metre per second	m/s
volume	cubic metre	m^3
wave number	1 per metre	1/m

* May also be expressed: 1/s—see Annex.

COPYRIGHT

TABLE 4

DERIVED UNITS HAVING SPECIAL NAMES

Physical quantity	Unit and symbol	Definition	Derivation	Explanatory statement
frequency	hertz Hz	1 Hz = 1 1/s	—	A hertz is the frequency of a regularly recurrent phenomenon that repeats itself once each second.
force	newton N	1 N = 1 kg.m/s²	—	A newton is the force which when applied to a body having a mass of one kilogram, causes an acceleration of one metre per second squared in the direction of application of the force.
pressure, stress	pascal Pa	1 Pa = 1 N/m²	1 kg/m.s²	A pascal is the pressure or stress which arises when a force of one newton is applied uniformly over an area of one square metre.
energy, work, quantity of heat, radiant energy	joule J	1 J = 1 N.m	1 kg.m²/s²	A joule is the energy expended or the work done when a force of one newton moves the point of application a distance of one metre in the direction of that force.
power, radiant flux	watt W	1 W = 1 J/s	1 kg.m²/s³	A watt is the power used when energy is expended or work done at the rate of one joule per second.
potential difference, electromotive force, electric potential	volt V	1 V = 1 W/A	1 kg.m²/A.s³	A volt is the potential difference that exists between two points on a conductor carrying an unvarying electric current of one ampere when the power dissipated between those points is equal to one watt.

6 **MULTIPLES OF SI UNITS.**

6.1 **Prefixes.** The prefixes given in Table 6 (SI Prefixes) are used to form names and symbols of multiples (decimal multiples and sub-multiples) of the SI units.

It should be noted that *the new units so formed are not coherent*. It is strongly recommended, therefore, that to avoid errors, in all calculations with formulas involving more than one unit, only SI base, supplementary and derived units be used.

6.2 **Use of Prefixes.**

6.2.1 A prefix is combined with the unit name and the resulting multiple is written as one word.

Examples:
millimetre, microgram, megawatt, picofarad.

6.2.2 The symbol of a prefix is considered to be combined with the unit symbol to which it is directly attached, forming with it the symbol for a multiple which can be provided with a positive or negative exponent and which can be combined with other symbols to form symbols for multiples of derived units.

Examples:
1 cm^3 = $(10^{-2}\ m)^3$ = $10^{-6}\ m^3$
1 μs^{-1} = $(10^{-6}\ s)^{-1}$ = $10^{6}\ s^{-1}$
1 mm^2/s = $(10^{-3}\ m)^2/s$ = $10^{-6}\ m^2/s$

6.2.3 Compound prefixes should not be used.

Example:
Write nm (nanometre) instead of mμm (millimicrometre).

TABLE 6

SI PREFIXES

Factor by which the unit is multiplied	Prefix	
	Name	Symbol
10^{18}	exa	E
10^{15}	peta	P
10^{12}	tera	T
10^{9}	giga	G
10^{6}	mega	M
10^{3}	kilo	k
10^{2} *	hecto	h
10^{1} *	deka †	da
10^{-1} *	deci	d
10^{-2} *	centi	c
10^{-3}	milli	m
10^{-6}	micro	μ
10^{-9}	nano	n
10^{-12}	pico	p
10^{-15}	femto	f
10^{-18}	atto	a

* As indicated in Clause 6.2.5, these multiples, their names and symbols, are not preferred and their use should be limited as far as possible.

† 'deka' rather than 'deca' is the recommended spelling in Australia.

COPYRIGHT

TABLE 8

NON-SI UNITS OF PRACTICAL IMPORTANCE

Quantity	Name of unit	Unit symbol	Definition
plane angle	degree	°*	1° = (π/180) rad *
	minute	′	1′ = (1/60)°
	second	″	1″ = (1/60)′
time	day	d	1 d = 24 h
	hour	h	1 h = 60 min
	minute	min	1 min = 60 s
temperature	degree Celsius	°C	See Table 1, Note 1
temperature interval			

* The degree may also be defined as the plane angle between two radii of a circle that cut off on the circumference an arc that is one-three hundred and sixtieth part of the circumference.

8 NUMERICAL VALUES.

8.1 Choice of Multiple. The choice of the appropriate multiple of an SI unit is governed by convenience, the multiple chosen for a particular application being the one which will lead to numerical values within a practical range.

The multiple can usually be chosen so that the numerical value will be between 0.1 and 1 000.

Examples:

1.2×10^{3} N can be written as 1.2 kN

0.003 94 m can be written as 3.94 mm

1 401 Pa can be written as 1.401 kPa

31×10^{-9} s can be written as 31 ns

8.2 Use of Same Multiple Preferred. In a table of values for the same quantity or in a discussion of such values within a given context, it will generally be better to use the same multiple for all items, even when some of the numerical values will be outside the range 0.1 to 1 000. For certain quantities in particular applications, the same multiple is customarily used; for example, the millimetre is used for dimensions in most mechanical engineering drawings.

8.3 Decimal Marker. The marker used to indicate the position in a number where a decimal fraction begins should be a point situated either—

(a) at the mid-height of the digit; or

(b) on the line.

NOTE: Attention is drawn to the 'decimal comma' which was used in the 1974 edition of AS 1000. The Metric Conversion Board has recognized the use of the decimal comma in situations where ambiguity does not arise. The comma is used in all English-language international standards issued by the International Organization for Standardization (ISO). Accordingly, the decimal comma should be regarded as an acceptable alternative to the decimal point.

8.4 Grouping of Figures. It is strongly recommended that numbers be divided into groups of three figures, counting outwards in both directions from the decimal marker, whether present or not. Neither dots nor commas should be inserted in the spaces between the groups.

When a number, occurring in textual matter, contains only four figures before and/or behind the decimal marker, the recommendation may be waived. When a series of such numbers are tabulated, however, the recommendation may only be waived when *all* the numbers have no more than four figures either side of the decimal marker; if *any* number in a tabulation has more than four figures on one or both sides of the decimal marker then the recommendations should be applied to all numbers in the tabulation. Additionally, all decimal markers should be aligned.

Numbers less than one should be written with a zero in front of the decimal marker.

Examples:

123 456 789.987 65

1 234.567 8 or 1234.5678

10 000

0.000 01

COPYRIGHT

9 RULES FOR WRITING UNIT NAMES AND SYMBOLS.

9.1 General Rules. Names of units are written or printed in the script or type used for other technical matter.

The name of a unit derived from a proper name does not take a capital letter unless it occurs at the beginning of a sentence. The only exception to this rule is the unit degree Celsius, where Celsius always takes a capital letter.

Names of units use the plural when attached to quantities greater than one.

Examples:

The temperature interval is 5 degrees Celsius.

The average current is 0.75 ampere.

Newton is the SI unit of force.

Unit names and symbols should not be used together in the one expression. The symbols for the product of quantities (.) and for their division (/) should only be used in association with unit symbols and *not* with unit names.

Unit symbols:

- should be printed in roman (upright) type (irrespective of the type used in the rest of the text);
- remain unaltered in the plural;
- are written without a final full stop (period) except at the end of a sentence;
- are placed after the complete numerical value in the expression for a quantity, leaving a space between the numerical value and the unit symbol; and
- are written in lower case letters, except that the first letter is written in upper case when the name of the unit is derived from a proper name and when the prefix is mega, giga, tera, peta or exa.

Examples:

m	metre	MJ	megajoule
s	second	GW	gigawatt
A	ampere	THz	terahertz
Wb	weber		

9.2 Unit Symbols in Combination.

9.2.1 When a compound unit is formed by multiplication of two or more units, the symbol for the compound unit may be indicated in one of the following ways:

N.m (preferred) N·m N m

NOTES:

1. When using a unit symbol which coincides with the symbol for a prefix, it is strongly recommended that the product symbol be used to avoid confusion. For example, the unit for thermal resistivity, metre kelvin per watt, should be written m.K/W and not mK/W which could be read as millikelvin per watt.
2. Juxtapositioning of the unit symbols has been recognized in the past as another method of forming a compound unit, but this method is now deprecated. For example, kWh should preferably be: kW.h.

9.2.2 When a compound unit is formed by dividing one unit by another, the symbol for the compound unit may be indicated in one of the following ways:

$m.s^{-1}$ m/s $\frac{m}{s}$

When the denominator itself consists of two or more units, the symbol for the compound unit may be indicated in one of the following ways:

$W.m^{-1}.K^{-1}$ W/m.K W/(m.K) $\frac{W}{m.K}$

In no case should more than one solidus appear in a symbol.

10 LIST OF UNITS. For a number of quantities commonly used in technology (in industry and commerce), the Annex lists SI units and examples of decimal multiples and sub-multiples of SI units that may be required, together with some non-SI units that may be used.

As indicated in Columns 4 and 5 of the Annex, some non-coherent units are so firmly established in practice that at this stage their use in association with SI units must be recognized.

COPYRIGHT

ANNEX

List of SI units and a selection of decimal multiples and sub-multiples of the SI units together with other units or other names of units which may be used.

1	2	3	4	5
Quantity	SI unit	Selection of decimal multiples and sub-multiples of SI unit *	Other units or other names of units which may be used	Remarks
SPACE AND TIME				
length	m (metre)	km cm mm µm nm		The international nautical mile (n mile) is used in marine and air navigation only 1 n mile = 1852 m
area	m^2	km^2 dm^2 cm^2 mm^2	ha (hectare)	
volume	m^3	dm^3 cm^3 mm^3	ML (megalitre) kL (kilolitre) L (litre) mL (millilitre)	The symbol l for litre is permitted
time	s (second)	ks ms µs ns	d (day) h (hour) min (minute)	Other units such as week, month and year (a) are in common use Use of the second (s) is preferred in derived units
velocity	m/s		km/h	The knot (kn) is used in marine and air navigation only 1 kn = 0.514 444 m/s
acceleration	m/s^2			
flow rate (volume basis)	m^3/s		kL/s L/s mL/s	
MECHANICS				
mass	kg (kilogram)	g mg µg	t (tonne)	The metric carat (CM) is used for commercial transactions in diamonds, fine pearls and precious stones 1 CM = 0.2 g

* As far as possible, the multiples and sub-multiples given are limited to ternary powers of 10, but some exceptions covering other powers are given.

COPYRIGHT

1	2	3	4	5
Quantity	SI unit	Selection of decimal multiples and sub-multiples of SI unit *	Other units or other names of units which may be used	Remarks
mass per unit length	kg/m	mg/m	ktex tex (tex) dtex	The tex is used in the textile industry
density (mass density)	kg/m^3	g/m^3	$1\ t/m^3 = 1\ kg/L$ g/L	kg/hL is used for the expression of grain densities
force	N (newton)	MN kN mN µN		
moment of force, torque	N.m	MN.m kN.m mN.m µN.m		
pressure	Pa (pascal)	GPa MPa kPa mPa µPa		The millibar (mb) is used in meteorology 1 mb = 100 Pa
kinematic viscosity	m^2/s	mm^2/s		The centistokes (cSt) is in general use but should not be used together with SI units 1 cSt = 1 mm^2/s
surface tension	N/m	mN/m		
energy, work	J (joule)	TJ GJ MJ kJ mJ µJ		The watt hour (W.h) and its multiples kW.h, MW.h, GW.h and TW.h are used in the field of consumption of electrical energy 1 W.h = 3.6 kJ The electronvolt (eV) and its multiples keV, MeV and GeV are used in scientific work
HEAT				
heat flow rate	W	kW		
thermal conductivity	W/m.K			

* As far as possible, the multiples and sub-multiples given are limited to ternary powers of 10, but some exceptions covering other powers are given.

COPYRIGHT

1	2	3	4	5
Quantity	SI unit	Selection of decimal multiples and sub-multiples of SI unit *	Other units or other names of units which may be used	Remarks
thermal conductance (heat transfer coefficient)	$W/m^2.K$			
heat capacity	J/K	kJ/K		
specific heat capacity	J/kg.K	kJ/kg.K		

* As far as possible, the multiples and sub-multiples given are limited to ternary powers of 10, but some exceptions covering other powers are given.

APPENDIX A
MEANING OF MILLION, BILLION, ETC

The following convention is in accordance with the 9th CGPM meeting and also in accordance with the current Commonwealth Style Manual of the Australian Government.

Term	Significance	Corresponding decimal factor
million	thousand × thousand	10^6
billion	million × million	10^{12}
trillion	million × billion	10^{18}
quadrillion	million × trillion	10^{24}

A different convention is in use in the United States of America where—

'million' signifies a thousand times a thousand (10^9)

'billion' signifies a thousand times a million (10^9)

'trillion' signifies a million times a million (10^{12})

'quadrillion' signifies a million times a US billion (10^{15})

In view of the existence of the different conventions, use of the terms billion, trillion and quadrillion should be avoided.

COPYRIGHT

Chapter 2
Water supply

Students are required to purchase a copy of the current Australian Standards, National Plumbing and Drainage Code, Part 1: Water supply (AS 3500.1) and Part 4: Hot water supply systems (AS 3500.4) as they will be used as class text.

Page

This chapter supplements the above Australian Standards and consists of extracts from Australian Standards relevant to the following topics:

Contents of piping, conduits and ducts—Identification
(See AS 1345—1982, Identification of contents of piping, conduits and ducts) 34

Copper tubes—Safe working pressure and testing pressure
(See AS 1432—1990, Copper tubes for plumbing, gasfitting and drainage applications) 36

Copper alloy tubes—Safe working pressure and testing pressure
(See AS 3795—1990, Copper alloy tubes for plumbing and drainage applications) 38

Site investigations
(See AS 1726—1981, SAA Site Investigation Code) 40

General symbols
(See AS 1100.301—1985, Architectural drawing and AS 1100.401—1984, Engineering survey and engineering survey design drawing) 42

COPYRIGHT

STANDARDS AUSTRALIA

Australian Standard

Identification of contents of piping conduits and ducts

SPECIFICATION

1 SCOPE. This standard sets out methods of identifying the contents of piping, conduits and ducts by the use of colours, letters and symbols.

5 BASIS OF IDENTIFICATION.

5.1 General. This standard provides for the identification of services by the use of a basic identification colour only or a basic identification colour with lettering.

In addition, where a service is classified as a hazardous service, provision is made for hazard identification. In certain circumstances, the alternative methods of identification described in Appendix G may be permitted.

5.2 Basic Identification Colour. Basic identification colours, broadly identifying the contents of the service, and the physical characteristics of the colours, together with their meaning, are set out in Table 1.

5.4 Direction of Flow. The direction of flow may be indicated by an arrow or arrowhead.

6 APPLICATION OF IDENTIFICATION.

6.1 General. It is essential that the identification be readily visible.

Identification colours shall contrast with the background. Where the decorative and identification colours do not contrast, contrast shall be achieved by the provision of a contrasting border to the identification colour. A contrasting border shall also be provided where the identification of the service is located in poor light.

6.2 Location of Identification. Identification markings shall be located adjacent to all junctions, valves, service appliances, bulkheads, wall penetrations and the like and at spacings not greater than 8 m along the service, except that for uninterrupted lengths of external services, visible along their length, the spacing of identification shall not exceed 50 m (see Appendix D).

APPENDIX D

DETAILS OF LOCATION OF MARKINGS

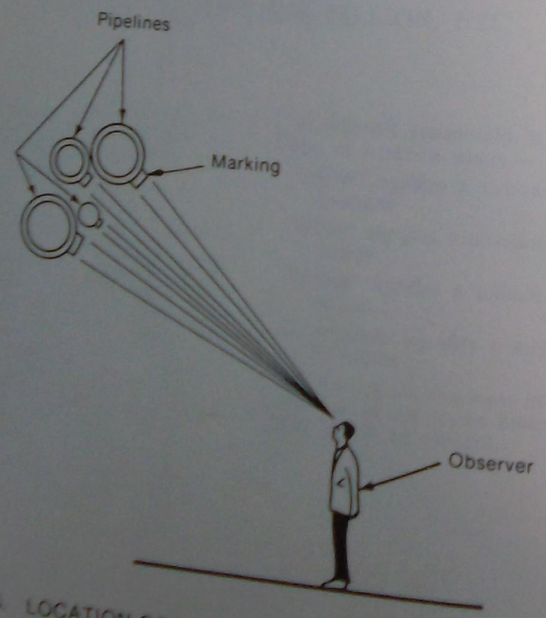

FIG D5 LOCATION OF MARKINGS TO ENSURE VISIBILITY TO OBSERVER

COPYRIGHT

TABLE 1

PIPELINE IDENTIFICATION COLOURS*

Pipeline identification	ISO colour name†	AS K185	Colour
Water	Green	No 228 Emerald Green	See Publishing Note
Steam	Silver-grey		
Oil –mineral, vegetable or animal Flammable or combustible liquids	Brown	No 414 Golden Brown	
Gases, in either gaseous or liquefied form‡ Vapours and pneumatically conveyed fumes and materials	Yellow-ochre	No 366 Light Beige	
Acids and alkalis	Violet	No 797 Light Violet	
Air	Light Blue	No 112 Arctic Blue	
Other fluids, including drainage pipes unless the drain is to a particular service	Black		
Firefighting materials, including detection and suppression systems (generally in conjunction with other identification of the contents)	Safety Red	No 537 Signal Red	
Hazardous services (generally in conjunction with other identification of the contents, see also Clauses 5.3 and 5.5)	Safety Yellow (in conjunction with black)	No 356 Golden Yellow	
Electricity	Light Orange	No 557 Light Orange	
Communications	White		

*The physical definition of each colour in CIE Standard Colorimetric System of Colour Specification and the Munsell reference are given in Appendix E.

†The ISO colour name given is that used in ISO R 508, with the exception of white and light orange as ISO R 508 does not deal with identification of communications or electrical services.

‡Liquids in pipelines which are gases under normal atmospheric conditions when released.

NOTES:

1. Colour is used on many occasions for identifying different qualities or duties of pipes during manufacture. Users of pipe are warned that such markings may be for purposes other than to identify the contents. Where piping with such colour markings is used, the markings should be obliterated to avoid misinterpretation of their meaning.
2. The use by gas supply authorities of the colour canary yellow to identify pipelines containing gas is common practice in Australia. However this standard specifies the colour light beige for this purpose, this being the colour agreed upon for this purpose in ISO R 508.

PUBLISHING NOTE: Colour chips appear in this column in the published standard, but are not reproduced in this extract.

COPYRIGHT

STANDARDS AUSTRALIA

Australian Standard

Copper tubes for plumbing, gasfitting and drainage applications

APPENDIX B

SAFE WORKING PRESSURE AND TESTING PRESSURE FOR COPPER TUBES

(This Appendix does not form an integral part of this Standard.)

B1 SAFE WORKING PRESSURE The safe working pressure is the recommended maximum continuous pressure to which the tubes should be subjected for the design life of the plumbing installation. These pressures are based on tubing in the annealed temper to allow for the effects of softening during normal jointing operations.

The safe working pressures given in Table B2 are provided for guidance and have been calculated from the following equation:

$$P_{sw} = \frac{2000 \times S_D \times t_m}{D - t_m}$$

where

P_{sw} = safe working pressure, in kilopascals

S_D = maximum allowable design tensile stress for annealed copper, in megapascals

t_m = minimum thickness at any point, in millimetres

D = maximum mean outside diameter, in millimetres

Values of S_D for temperature ranges specified in AS 1135 are as given in Table B1.

TABLE B1

MAXIMUM ALLOWABLE DESIGN TENSILE STRESS FOR ANNEALED COPPER

Temperature range, °C	Maximum allowable design tensile stress, MPa
⩽ 50	41.3
> 50 ⩽ 75	33.9
> 75 ⩽ 100	32.8
>100 ⩽ 125	32.7
>125 ⩽ 150	32.3
>150 ⩽ 175	28.0
>175 ⩽ 200	21.9

B2 TESTING PRESSURE The testing pressure is the recommended maximum pressure which can be safely applied for short periods of time. In addition to giving a guide to the highest pressure to be applied during pressure testing of an installation, this pressure can also be useful for designing pipelines which are only intended to be operated at these pressures for relatively short times, e.g. pump boosted services.

As for safe working pressures the testing pressures are based on tubing in the annealed temper to make allowance for the effects of softening during normal jointing operations. The values given in Table B2 have been calculated from the following equation:

$$P_t = 1.5 \times P_{sw}$$

where

P_t = testing pressure, in kilopascals

P_{sw} = safe working pressure, in kilopascals

COPYRIGHT

TABLE B2

SAFE WORKING PRESSURE (P_{sw}) AND TESTING PRESSURE (P_t) FOR TEMPERATURES UP TO AND INCLUDING 50°C

Nominal size	Pressure, kPa							
	Type A		Type B		Type C		Type D	
	P_{sw}	P_t	P_{sw}	P_t	P_{sw}	P_t	P_{sw}	P_t
DN 6	12 080	18 120	8 780	13 170	—	—	—	—
DN 8	9 380	14 070	6 870	10 310	—	—	—	—
DN 10	8 730	13 100	7 680	11 520	5 650	8 480	—	—
DN 15	6 380	9 570	5 630	8 450	4 170	6 260	—	—
DN 18	6 090	9 140	5 020	7 530	4 440	6 660	—	—
DN 20	5 900	8 850	4 140	6 210	3 670	5 510	—	—
DN 25	5 070	7 610	3 700	5 550	2 720	4 080	—	—
DN 32	4 010	6 020	2 940	4 410	—	—	2 160	3 240
DN 40	3 310	4 970	2 430	3 650	—	—	1 790	2 690
DN 50	2 460	3 690	1 810	2 720	—	—	1 340	2 010
DN 65	1 960	2 940	1 440	2 160	—	—	1 070	1 610
DN 80	2 030	3 050	1 620	2 430	—	—	1 200	1 800
DN 90	1 740	2 610	1 390	2 080	—	—	1 030	1 540
DN 100	1 520	2 280	1 210	1 820	—	—	900	1 350
DN 125	1 210	1 820	970	1 460	—	—	830	1 240
DN 150	1 310	1 970	1 000	1 500	—	—	800	1 200
DN 200	920	1 380	730	1 100	—	—	--	—

COPYRIGHT

STANDARDS AUSTRALIA

Australian Standard

Copper alloy tubes for plumbing and drainage applications

APPENDIX B

SAFE WORKING PRESSURE AND TESTING PRESSURE FOR COPPER ALLOY TUBES

(This Appendix does not form an integral part of this Standard.)

B1 SAFE WORKING PRESSURE The safe working pressure is the recommended maximum continuous pressure to which the tubes should be subjected for the design life of the plumbing installation. These pressures are based on tubing in the annealed temper to allow for the effects of softening during normal jointing operations.

The safe working pressures given in Table B2 are provided for guidance and have been calculated from the following equation:

$$P_{sw} = \frac{2000 \times S_D \times t_m}{D - t_m}$$

where

P_{sw} = safe working pressure, in kilopascals

S_D = maximum allowable design tensile stress for annealed brass or copper nickel, in megapascals

t_m = minimum thickness at any point, in millimetres

D = maximum mean outside diameter, in millimetres

Values of S_D for temperature ranges specified in AS 1135 are as given in Table B1.

TABLE B1

MAXIMUM ALLOWABLE DESIGN TENSILE STRESS FOR ANNEALED COPPER ALLOY

Temperature range °C	Maximum allowable design tensile stress, MPa	
	Brass	Copper nickel
⩽ 50	68.8	68.8
> 50 ⩽ 75	68.8	66.2
> 75 ⩽ 100	68.8	65.1
> 100 ⩽ 125	68.8	63.8
> 125 ⩽ 150	68.5	61.9
> 150 ⩽ 175	53.2	60.0
> 175 ⩽ 200	28.6	58.7
> 200 ⩽ 225	13.2	57.1

B2 TESTING PRESSURE The testing pressure is the recommended maximum pressure which can be safely applied for short periods of time. In addition to giving a guide to the highest pressure to be applied during pressure testing of an installation, this pressure can also be useful for designing pipelines which are only intended to be operated at these pressures for relatively short times, e.g. pump boosted services.

As for safe working pressures the testing pressures are based on tubing in the annealed temper to make allowance for the effects of softening during normal jointing operations. The values given in Table B2 have been calculated from the following equation:

$$P_t = 1.5 \times P_{sw}$$

where

P_t = testing pressure, in kilopascals

P_{sw} = safe working pressure, in kilopascals

COPYRIGHT

TABLE B2

SAFE WORKING PRESSURE (P_{sw}) AND TESTING PRESSURE (P_t) FOR COPPER ALLOY TUBES FOR TEMPERATURES UP TO AND INCLUDING 50 °C

Nominal size	Pressure, kPa					
	Brass				Copper nickel	
	Type B		Type D		Type B	
	P_{sw}	P_t	P_{sw}	P_t	P_{sw}	P_t
DN 10	12 800	19 200	—	—	12 800	19 200
DN 15	9 370	14 060	—	—	9 370	14 060
DN 18	8 360	12 540	—	—	8 360	12 540
DN 20	6 900	10 350	—	—	6 900	10 350
DN 25	6 170	9 260	—	—	6 170	9 260
DN 32	4 890	7 340	3 600	5 400	4 890	7 340
DN 40	4 050	6 080	2 990	4 480	4 050	6 080
DN 50	3 020	4 530	2 230	3 340	3 020	4 530
DN 65	2 400	3 600	1 780	2 670	2 400	3 600
DN 80	2 710	4 060	2 000	3 000	2 710	4 060
DN 90	2 310	3 460	1 710	2 560	—	—
DN 100	2 020	3 030	1 490	2 240	—	—
DN 125	1 610	2 420	1 390	2 080	—	—
DN 150	1 670	2 510	1 340	2 010	—	—

COPYRIGHT

STANDARDS AUSTRALIA

Australian Standard
SAA Site Investigation Code

APPENDIX A
INFORMATION REQUIRED

A1 INTRODUCTION. This Appendix is a moderately extensive list of items about which information is required during site investigations. All items will not be relevant to all investigations, nor could such a list possibly be exhaustive. However, consideration of the relevance of each item in the list to an investigation in hand should suggest any other important items not included.

The list is divided into two parts:

(i) Information normally available from Government Departments and Statutory Authorities.

(ii) Information normally requiring field investigation.

A2 INFORMATION NORMALLY AVAILABLE FROM GOVERNMENT DEPARTMENTS AND STATUTORY AUTHORITIES.

A2.5 Drainage and Sewerage.
(a) Names of authorities concerned and bylaws.
(b) Location and levels of system, showing sizes, whether soil, rainwater or combined.
(c) Existing flow quantities and capacity for additional flow.
(d) Liability to surcharging.
(e) Charges.

A2.6 Water Supply.
(a) Names of authorities concerned and bylaws.
(b) Location, sizes and depths of mains.
(c) Pressure.
(d) Water analysis.
(e) Availability of water for additional requirements.
(f) Storage requirements.
(g) Hydrants.
(h) Charges for connections and water.
(j) Possible additional sources of water, including groundwater.
(k) Water rights.

A2.7 Electricity Supply.
(a) Names of supply authorities concerned and regulations.
(b) Location, capacity and depths of mains.
(c) Whether a.c. or d.c., voltage, phases and frequency.
(d) Capacity to supply additional requirements.
(e) Transformer requirements.
(f) Charges for installation and power.

A2.8 Gas Supply.
(a) Names of supply authorities concerned and regulations.
(b) Location, sizes and depths of mains.
(c) Pressure and type.
(d) Capacity to supply additional requirements.
(e) Charges for installation and gas.

A2.9 Communications.
(a) Address of local Post Office.
(b) Location of telephone lines.
(c) Telecom Australia requirements.
(d) Charges for telephone installations.
(e) Radio communications and regulations.
(f) Telex, telegraph and data facilities.

A2.10 Hydrology.
(a) Authority controlling waterway.
(b) Admiralty charts and publications.
(c) Detailed information regarding river and tidal levels related to a specified datum.
(d) Size and nature of catchment area.
(e) Stream flow data.

A2.11 Climate.
(a) Publications of the Bureau of Meteorology.
(b) Annual precipitation and seasonal distribution.
(c) Storm data.
(d) Direction of prevailing and strongest winds with their seasonal distribution.
(e) Liability to fogs.
(f) Range of temperature, seasonal and daily.
(g) Humidity conditions.

A3 INFORMATION NORMALLY REQUIRING FIELD INVESTIGATION.

A3.3 Local Engineering Services.
(a) Materials supplies.
(b) Plant hire.
(c) Workshop and repair.
(d) Professional.

A3.5 Foundation Conditions.
(a) Geological investigation.
(b) Soils investigation.
(c) Groundwater conditions.
(d) Local knowledge of special site problems (check Local Authorities).

A3.7 Climate.
(a) Annual precipitation and seasonal distribution.
(b) Storm data.
(c) Direction of prevailing and strongest winds with their seasonal distribution.
(d) Liability to fogs.
(e) Range of temperature (seasonal and daily).
(f) Humidity conditions.

A3.8 Sources (and Costs) of Local Material for Construction.
(a) General filling materials (filling sand, ashes, random fill, hardcore, industrial wastes such as slag).
(b) Random fill for road, runway bases, major buildings foundations and similar structures.
(c) Sub-base material for roads, runways, etc.
(d) Road base materials.
(e) Road gravel, surfacing and re-sheeting.
(f) Rock fill including rip-rap.
(g) Aggregates.
(h) Filter materials (sands, gravels, crushed stone).
(j) Impervious or clay fill.
(k) Brick clay.
(l) Pozzolanic materials.
(m) Building stone and pitching stone.
(n) Topsoil.
(o) Ready-mixed concrete or bituminous concrete plants.
(p) Timber.
(q) Bricks.

COPYRIGHT

COPYRIGHT

STANDARDS AUSTRALIA

Australian Standard

Technical drawing

Part 301: Architectural drawing

2.3 SYMBOLS. The symbols given in Table 2.2 should be used to indicate relevant features on drawings prepared for general or communication purposes, but only where drawing to scale is impracticable.

NOTE: Symbol size and line thickness will depend on drawing size and scale. Symbols given have therefore not been dimensioned.

TABLE 2.2
GENERAL SYMBOLS

Symbol	Meaning
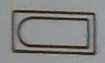	BATH
	SHOWER BATH
	SHOWER
	BASIN
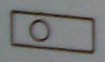	VANITY BASIN (Locate basin as required)
	WATER CLOSET
	BIDET

COPYRIGHT

TABLE 2.2 (*continued*)
GENERAL SYMBOLS

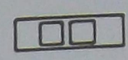	SINK—DOUBLE BOWL (Locate bowls as required)
	SINK—SINGLE BOWL (Locate bowl as required)
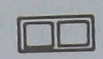	TUB—DOUBLE
	TUB—SINGLE
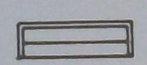	URINAL STALL
	DRINKING TROUGH
	DRINKING FOUNTAIN
	HOTPLATES

NOTE: It is recognized that numerous tracing templates with differing symbols are available, and that the increasing application of computer-aided drafting packages will generate an ever wider variation of symbols. The symbols given are examples of standard symbols that can be drawn manually.

Where possible, the symbols should be drawn without their associated abbreviations, to minimize clutter and improve clarity. Abbreviations should not be required, for example, where a larger scale drawing is cross-referenced, but may be required if there is a need for other symbols of similar appearance.

Examples of other items not included are:

Refrigerator, dishwasher, clothes washer, clothes dryer, cooker, wall oven, cleaner's sink.

Most of these would be squares or rectangles (possibly with a diagonal through them) and the associated abbreviation.

Cleaner's sink would look very similar to tub-single, therefore identification letters would need to be added to the symbol.

Some symbols shown in AS 1100, Part 401, are applicable to block and site plans.

COPYRIGHT

STANDARDS AUSTRALIA

Australian Standard
Technical drawing

Part 401: Engineering survey and engineering survey design drawing

TABLE 3.9(B)
SYMBOLS FOR WATER SUPPLY

NOTE: See also Table 2.2.1(A), Table 2.2.1(B) and Table 2.2.1(C). *

Symbol		Meaning
Plan	Section	
		Air valve or anti-vacuum valve, major and minor
		Automatic inlet control valve, major and minor
		Branch capped, major
		Branches, major— Branch Flanged branch Wye branch
		Butterfly valve, major and minor
		Ends major and minor— End cap Plug Dished end
		Electrolysis test point, major and minor
		Flow meter (with recorder) major and minor

* Not included in handbook

COPYRIGHT

TABLE 3.9(B) *continued*

Symbol		Meaning
Plan	Section	
		Hydrants— Major and minor
		Major and minor, tee blanked off
		Minor— with control valve
		screwdown
		Manhole, major
		Taper, minor
		Tee— Major
		Minor
		Angle branches, slope junction or wyes, minor
		Bend, minor
		Vertical bend, minor
		Blank flange, minor
		Collar or Gibault joint, minor
		Collar or Gibault joint with spacer, minor
		Flanged end, minor
		Flanged packer, minor

COPYRIGHT

TABLE 3.9(B) continued

Symbol		Meaning
Plan	Section	
		Orifice plate, minor
		Dismantling joint, minor
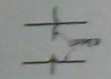		Non-connecting mains, minor
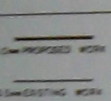		Pipes, major and minor
		Puddle flange, minor
		Reflux valve; major and minor
		Relief valves, minor— Mechanical Manual
		Gravity scour valve, major and minor
		Undecided scour valve
		Spigot band— Major Minor
		Spigot end, minor
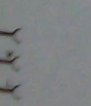		Socket ends, minor— Rubber ring Welded Lead joint

COPYRIGHT

TABLE 3.9(B) continued

Symbol		Meaning
Plan	Section	
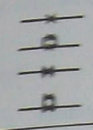	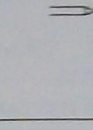	Stop valves— Major and minor Minor with bypass Minor, lesser diameter with tapers Minor with tapers and bypass

COPYRIGHT

Chapter 3
Waste disposal

Students are required to purchase a copy of the current Australian Standard, National Plumbing and Drainage Code, Part 2: Sanitary plumbing and sanitary drainage (AS 3500.2) as it will be used as a class text.

Page

This chapter supplements the above Australian Standard and consists of extracts from Australian Standards relevant to the following topics:

UPVC pipe systems
(See AS 2032—1977, Code of practice for installation of UPVC pipe systems) 49

Polyethylene pipe system
(See AS 2033—1980, Installation of polyethylene pipe systems) 58

Vitrified clay pipelines
(See AS CA56—1968, Code of recommended practice for the construction of vitrified clay pipelines (up to and including 12-in diameter with flexible or rigid joint systems) 60

Small septic tanks
(See AS 1546—1990, Small septic tanks) 62

Effluent disposal—Small septic tanks
(See AS 1547—1973, Code of practice for disposal of effluent from small septic tanks) 69

General symbols
(See AS 1100.301—1985, Architectural drawing and AS 1100.401—1984, Engineering survey and engineering survey design drawing) 70

COPYRIGHT

STANDARDS AUSTRALIA

Australian Standard

Code of practice for installation of UPVC pipe systems

PART 1. SCOPE, DEFINITIONS AND MATERIAL REQUIREMENTS

1.3 DEFINITIONS. For the purpose of this code the following definitions apply:

Bedding material — material surrounding the pipe and bedding it in position. The bedding comprises three zones, viz the pipe underlay, the pipe overlay, and the pipe support (see Fig. 1.1).

Pipe underlay — the bedding material on which a pipe is laid (see Fig. 1.1).

Pipe overlay — the layer of bedding material between the pipe side-support material and the backfill to protect the pipe from damage and provide a means of distributing superimposed loads (see Fig. 1.1).

Pipe side support — the layer of bedding material between the pipe underlay and pipe overlay material to provide side support to the pipe and to assist the load-carrying ability of the pipeline (see Fig. 1.1).

Backfill — material used for filling trenches and excavations after a pipeline has been laid underground. It is normally placed on top of pipe bedding material (see Fig. 1.1).

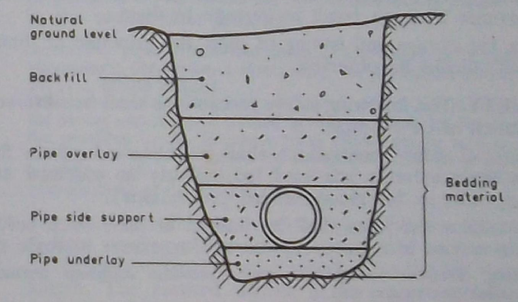

Fig. 1.1. LAYERS IN A TRENCH INSTALLATION AS DEFINED

PART 2. GENERAL RECOMMENDATIONS FOR THE SELECTION AND USE OF UPVC PIPE AND FITTINGS

2.2 HANDLING AND STORAGE.

2.2.1 General. UPVC pipes and fittings should not be subjected to rough handling particularly during loading and unloading operations. Where wire ropes or chains are employed, pipes should be suitably protected against scoring.

NOTE: Pipes made from UPVC are considerably lighter than traditional materials and are characterized by toughness, relative flexibility, and general resistance to impact damage. They are, however, subject to distortion under load, particularly at elevated temperatures, and to bowing due to uneven heating, and are susceptible to scoring from sharp edges.

COPYRIGHT

2.2.2 Precautions. In the handling, transportation and storage of UPVC pipes and fittings the following precautions should be observed:

(a) Pipes stacked for transport should be continuously and evenly supported to minimize distortion. Alternatively, horizontal supports of at least 75 mm bearing width, spaced not further apart than 1.5 m centre-to-centre, should be placed beneath the pipes; if the stacks are rectangular, vertical supports at twice that spacing should be provided at the sides. In such load-bearing stacks, maximum free height should not exceed 3 m. For long-term storage (more than 3 months), maximum free height should not exceed 1.5 m. If different classes of pipes are kept in the same stacks, then the heaviest class should always be at the bottom.

Sharp sections bearing against the pipes should be avoided as these can cause indentations in, or scoring of, the pipe wall.

(b) Pipes and fittings should be protected from elevated temperatures and direct sunlight if stored for more than 6 months.

NOTE: Uneven heating around the circumference of a pipe may cause differential expansion along the length which may result in twisting and bowing. Elevated temperatures will soften the pipe and, for pipe stored in stacks, the bottom layers tend to be distorted.

(c) Pipes with end treatment, such as belling, forming, flanging, or pre-assembled fittings, should be stacked or supported so that the ends are free from loading; if necessary, they should be protected from damage.

(d) Pipes cut and squared for jointing should be given special attention to ensure that they are always handled, particularly in transit, in a manner that keeps the pipe ends free from damage.

(e) If the pipes are nested (i.e. the pipes are stored inside pipes of larger diameter), the number of layers should be adjusted so that the total mass of the nested pipes does not exceed the total mass of pipes normally contained in such storage areas.

(f) When being transported, pipes should not be restrained in a manner likely to result in damage to them.

(g) In the storage and issuing of pipe, the principle of 'first in, first out' should be observed.

2.3 SAFETY. The following safety precautions shall be observed during the installation of UPVC pipe:

(a) Normal safety precautions shall be observed where flammable or toxic solvents are used, particularly in confined areas (see Appendix A for recommended precautions).

(b) Potable water lines shall be flushed at least once before going into service to remove any extraneous matter or toxic materials.

NOTE: Pressure testing with water provides sufficient flushing of the pipeline (see Section 4.4).

(c) Being a non-conductive material, UPVC pipe cannot be used as a means of earthing electrical installations or of dissipating static charges. When required, electricity supply authorities shall be advised by the installer if any parts of existing metallic water supply pipelines are to be replaced by UPVC pipe.

(d) Where provision for electronic detection is required, suitable tracers may be buried in the pipe trench.

(e) Installers shall comply with all relevant statutory safety regulations.

COPYRIGHT

PART 3. JOINTING METHODS

3.2 GENERAL METHODS FOR JOINTING UPVC PIPE SYSTEMS.

3.2.1 Solvent-cement Joints (UPVC to UPVC).

3.2.1.2 *Procedure.* The jointing procedure should be as follows:

(a) The spigot end should be cut square and all burrs removed from the outside and inside edges.

(b) The spigot should be marked with a pencil line at a distance equivalent to the internal depth of the socket. Alternative methods of marking may be used provided that they do not damage the pipe. Scoring the pipe is not permitted.

(c) The joint should be tested for dry fit. Where pressure pipes are used an interference fit shall be reached before the pencilled mark is reached.

(d) The area between the pencilled mark and the spigot end should be dried and then cleaned and degreased with a cloth moistened with the pipe or fitting manufacturer's specified cleaning fluid. The interior of the socket should be similarly dried, cleaned, and degreased.

(e) Using clean, suitably sized, dry brushes or applicators, which will not contaminate the solvent cement, the joints should be coated with solvent cement complying with AS . . . .,* as follows:

(i) *For interference-fit joints with any type of solvent cement, or for clearance-fit joints where a gap-filling solvent cement is used.* A coating of solvent cement should be applied evenly to the internal surface of the socket for the full engagement length, and then to the external section of the spigot up to the mark, the socket coating being as light as possible to minimize the accumulation of excess solvent in the socket after jointing.

NOTE: For pipes of 100 mm diameter and larger, or in quick-drying atmospheric conditions, a slow-setting solvent cement complying with AS . . . . should be used.
While the surfaces are still wet the pipe end should be inserted in the socket and the pipe pushed in approximately to, but not beyond, the pencilled mark. Excessive force should not be used in 'homing' the pipe. The joint should be firmly restrained for a period of at least 30 s and not disturbed for 5 min, or as recommended by the manufacturer of the cement.

(ii) *For clearance-fit joints with non-gap-filling solvent cement.* A light coating of solvent cement should be evenly applied to the internal surface of the socket for the full engagement length. The marked section of the spigot should then be coated with solvent cement and left until touch dry. A second coating should then be applied to the socket and spigot and, while the surfaces are still wet, the spigot end should be inserted and bottomed in the socket. The joint should be firmly restrained for a period of at least 30 s and not disturbed for 5 min, or as recommended by the manufacturer of the cement.

3.2.1.3 *Special precautions.* To ensure sound joints the following special precautions should be observed:

(a) Care should be taken to ensure that the end of the pipe is in the socket squarely, and in the same alignment and grade as the preceding pipes or fittings.

(b) Containers of solvent cement should be kept tightly sealed when not in use to prevent loss of solvent which may result in a loss of the bond strength of the cement. Solvent cements may have a limited shelf life and should be used strictly in accordance with the manufacturer's instructions.

* AS . . . ., Solvent Cement for Use with Unplasticized PVC (UPVC) Pipe and Fittings (in course of preparation).

COPYRIGHT

(c) Special care should be taken in applying cement to the socket to ensure that excessive solvent cement is not allowed to enter the pipe as this may result in 'solvent cracking' of the pipe at a later stage. Wipe excess solvent cement from the outside and where possible from the inside of the joint.

(d) Any additional requirements stipulated by the pipe manufacturer shall be adhered to in making the joint.

(e) When work is being done under cold conditions, joints should be dry and free from ice; extra curing time shall be allowed to compensate for the lower temperature.

(f) Care should be taken to prevent any spillage of solvent cement from contacting the pipe or fittings. Any spillage should be immediately wiped off the affected parts.

(g) Special precautions should be taken to maintain the dryness of jointing surfaces when jointing is being done in wet conditions.

3.2.2 Rubber-ring Joints.

3.2.2.1 *Description.* UPVC pipe systems may be jointed by means of a ring complying with AS 1646 that provides the fluid seal, the ring being set in a socket of the pipe or fitting. The ring is compressed and makes a seal between the spigot and the socket.

3.2.2.2 *Procedure.* The following procedure applies to pipes where the rubber ring is incorporated in the socket. The procedure does not apply to expansion joints (see Rule 6.7).

(a) The inside of the socket, especially the ring housing, should be free from grit or dust, allowing the ring to seat evenly in this housing.

(b) Where rings are supplied loose, the operator should place a ring in its housing in the socket and ensure that it seats evenly by running the fingers completely around the inside of the socket.

(c) The system manufacturer's specified lubricant should be applied to the complete spigot chamfer of the pipe, care being taken to keep the ring and its housing free of lubricant unless otherwise recommended by the manufacturer.

NOTE: When not in use, containers of lubricant should be kept tightly closed to avoid entry of dirt.

(d) The spigot should be aligned with the socket, then inserted and pushed home to the witness mark. A witness mark is normally positioned on the spigot by the manufacturer to make allowance for thermal expansion.

NOTES:
1. When pipes are to be cut in the field, or where there is no witness mark on the pipe, a mark should be made on the pipe at the distance specified by the manufacturer. The outside of the pipe should be chamfered with a taper of approximately 15 degrees or as specified by the pipe manufacturer.
2. Where spigots and sockets are not made by the same manufacturer reference should be made to the socket manufacturer for the correct marking depth.

(e) The socket end should be firmly held during the jointing to prevent previously assembled joints from moving.

NOTE: Special tools may be required to assist in joining large sized systems. In this respect reference should be made to the system manufacturers.

3.2.4 Threaded Joints. UPVC pipe tends to be notch-sensitive and therefore the cutting of a screw thread into UPVC pipe is not recommended. Moulded threaded fittings may however be used. Where a thread sealant is considered necessary, only PTFE material may be used. Alternatives such as hemp, paste, or solvent cements shall not be used.

Care should be taken not to overtighten or damage joints and to provide adequate support to prevent excessive shear forces on threaded joints.

COPYRIGHT

Where a threaded joint is to be made between UPVC and metal, the UPVC should be the male component of the joint. The UPVC should be reinforced if it is to be the female component of the joint.

PART 5. INSTALLATION OF UPVC SEWER PIPES BELOW GROUND

5.1 GENERAL PROVISIONS.

5.1.2 Laying in Direct Sunlight or Hot Weather. Precautions are necessary to minimize the distortion caused by uneven heat absorption where one side is exposed to the heat and the other is in the shade. The pipes should be shaded where possible, particularly during the jointing process so that an even heat is maintained around the circumference of the pipe. In these conditions the pipe should be free to expand and contract. This effect may be otherwise overcome by rotating alternate pipes 180 degrees immediately prior to jointing. The system shall not be restrained by rigid connections until it reaches ground or service temperature.

PART 6. INSTALLATION OF UPVC PIPE SYSTEMS FOR SOIL, WASTE AND VENT APPLICATIONS

6.6 LOCATION OF EXPANSION JOINTS.

6.6.1 General Principles. The general principles for locating expansion joints are as follows:

(a) Expansion joints should be fitted in cold pipelines at maximum spacings of 6 m, and in hot pipelines at maximum spacings of 4 m.

(b) The maximum length of pipeline between fixed points without an expansion joint or provision for thermal movement should be 2 m for cold pipelines, and 1 m for hot pipelines.

6.6.2 In Vertical Stacks and Pipelines. Expansion joints should be located in vertical SWV stacks and discharge pipes in the following positions:

(a) At each floor at which fixtures or branch lines are connected, immediately above the highest branch connection.

(b) At the base of a stack or at the end of a drain connection for a discharge pipe when required under Rule 6.6.1(b).

(c) At maximum spacing intervals subject to the requirements of Rule 6.6.1(a).

Fig. 6.1 illustrates the application of Rule 6.6.2.

6.6.3 Graded Pipelines. Expansion joints should be provided in graded pipelines in the following positions:

(a) Immediately upstream of the entry to a vertical stack, subject to the requirements of Rule 6.6.1(b).

(b) Immediately upstream of each change of direction in graded

COPYRIGHT

lines subject to the requirements of Rule 6.6.1(b).

(c) At maximum spacing intervals subject to the requirements of Rule 6.6.1(a).

Fig. 6.2 illustrates the application of Rule 6.6.3.

6.6.4 Alternative Expansion Provision. Expansion joints may be omitted in the following locations:

(a) Above the highest branch connection on a stack where the stack is free to move through a weatherproofed sleeve through the roof.

(b) At the base of an external stack connected to a drainage trap where the stack is free to move through a sleeve fitted in the drain connection.

(c) At a junction or bend in a graded pipeline where the thermal movement in the pipeline can be accommodated by deflection of the offset leg without affecting the grade of the pipeline; the lengths of the pipeline and the offset leg shall be as specified in Table 6.1.

NOTE: The supports for the pipe should not impede expansion in such cases.

(d) At a junction or bend in a graded pipeline where the thermal movement in the pipeline can be accommodated at a trap of plastics material, provided that the length of the pipeline does not exceed 6 m for cold pipelines or 4 m for hot pipelines, and the trap is in alignment with the pipeline.

Fig. 6.3 illustrates the application of Rule 6.6.4.

6.7 INSTALLATION OF EXPANSION JOINTS. Care should be taken to ensure that expansion fittings are correctly installed and that the pipe is not bottomed in the expansion socket.

The following procedure should be adopted where no temperature markings are provided on the movable part of the fittings:

(a) The pipe should be inserted in the expansion socket for the full depth and marked.

(b) The pipe should then be withdrawn a distance equal to the temperature engagement depth and marked. The temperature engagement depth should be determined according to the average environmental or pipe material temperature at the time of installing the system, as set out in Table 6.2.

(c) The pipe should be held in this position until the installation is complete.

TABLE 6.1
ALTERNATIVE EXPANSION PROVISION

Nominal size of pipe	Maximum pipe length L^* m	Minimum free length of offset leg l m
32, 40, 50	2.0	0.5
	3.0	0.6
	4.0	0.8
	6.0	1.0
65, 80, 100	2.0	0.75
	3.0	1.0
	4.0	1.1
	6.0	1.2
150	2.0	1.0
	3.0	1.1
	4.0	1.2
	6.0	1.2

* See Fig. 6.3.

COPYRIGHT

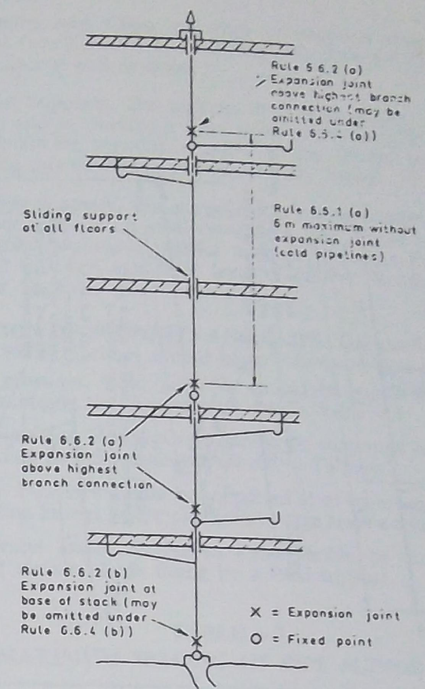

Fig. 6.1. EXPANSION JOINTS AND FIXED POINTS IN VERTICAL STACKS

TABLE 6.2
TEMPERATURE ADJUSTMENT FOR THE INSTALLATION OF EXPANSION JOINTS

Average temperature condition	Temperature engagement depth mm	
	Cold pipelines	Hot pipelines
Cold weather (below 12°C)	20	20
Average weather (between 12°C and 26°C)	15	18
Hot weather (above 26°C)	8	12
High temperature exposure (above 50°C)	—	6

COPYRIGHT

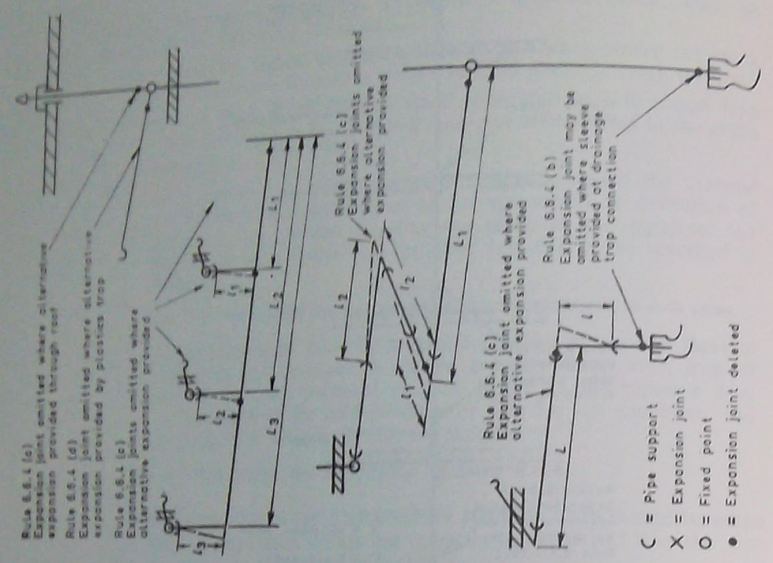

Fig. 6.3. ALTERNATIVE EXPANSION PROVISIONS IN VERTICAL AND GRADED PIPELINES

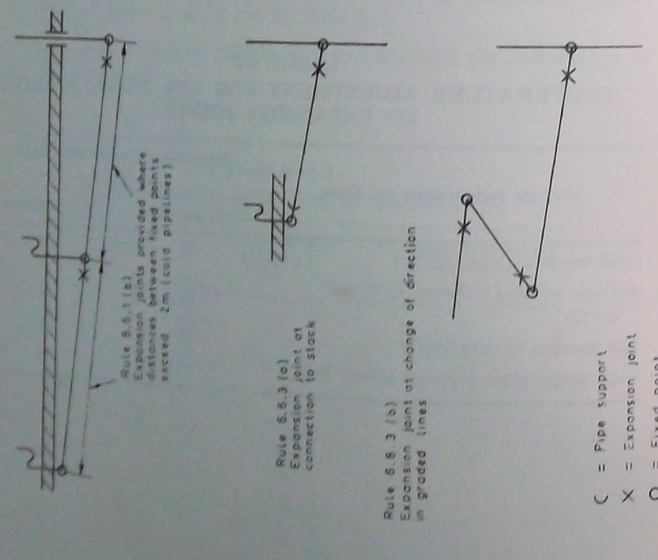

Fig. 6.2. EXPANSION JOINTS AND FIXED POINTS IN GRADED PIPELINES

COPYRIGHT

6.8 SUPPORTS.

6.8.1 Supports and Clips. All clips or supports should be of an approved fixed (see Rule 6.8.2) or sliding (see Rule 6.8.3) type, rigidly fixed to the adjacent wall or floor.

6.8.2 Fixed Supports. The purpose of a fixed support is to restrain all movement, and to provide a fixed point in the installation. The clip or support should be securely attached to the fitting, and be located in the clamping groove if it is provided on the fitting.

6.8.3 Sliding Supports. The purpose of a sliding support is to provide a guide without restraint on axial movement. The clip or support should be moulded from a suitable plastics material, or allow for the pipe to be surrounded with a 6 mm thick layer of suitable flexible material, or incorporate an approved plastics coating.

6.9 LOCATION OF SUPPORTS AND CLIPS. The location of supports and clips for SWV pipelines should be as follows:

(a) *Cold pipelines.* Cold pipelines should be supported at intervals not exceeding the distances set out in Table 6.3.

(b) *Hot pipelines.* Hot pipelines should be supported at intervals not exceeding half the distances set out in Table 6.3.

(c) *Bends.* Pipelines should be supported at or adjacent to every bend, including fittings where pipelines emerge from a wall.

(d) *Expansion joints.* Expansion joints should be supported at the socket section of the fitting by a fixed support.

TABLE 6.3
MAXIMUM SPACING OF PIPE SUPPORTS

Nominal size of pipe	Maximum spacing of supports (cold pipelines), m	
	Graded pipelines	Vertical pipelines
32	0.9	1.8
40, 50	1.0	2.0
65 to 150	1.2	2.5

PART 7. INSTALLATION OF UPVC STORM, SULLAGE AND SURFACE WATER PIPELINES UNDERGROUND

7.2 PIPES AND FITTINGS. Pipes and fittings laid in accordance with Part 7 shall comply with the requirements of AS 1254.

NOTE: Such pipes and fittings are not suitable for installation above ground in direct sunlight. For such installations reference should be made to AS 1273 or to AS 1415 and the appropriate Parts of this code.

COPYRIGHT

STANDARDS AUSTRALIA

Australian Standard

Installation of polyethylene pipe systems

PART 5. INSTALLATION OF POLYETHYLENE SEWER AND DRAIN PIPES BELOW GROUND

SECTION 5.1. GENERAL PROVISIONS

5.1.1 GENERAL. The class of pipe and type of bedding should be selected in accordance with the requirements of AS CA68. *

* Replaced by AS 2566—1982.

SECTION 5.2. INSTALLATION OF SEWER AND DRAIN PIPES BELOW GROUND

5.2.2 INSTALLATION PROCEDURE.

5.2.2.3 Pipe Installation in a Trench.

(a) *Provision of trench.* The trench shall be excavated, trimmed to the required grade, and should be as narrow as practicable. The bed width should be not less than 200 mm wider than the outside diameter of the pipe (see Fig. 5.1, dimension *B*) for pipes of 125 mm nominal outside diameter and above, and not less than twice the pipe diameter for smaller pipes. Where required, the trench should be wide enough for inspection purposes.

The trench should be excavated deeply enough to allow for the specified grade, the required depth of underlay (see Fig. 5.1, dimension *C*), and the minimum cover over the pipe as specified in Table 5.1.

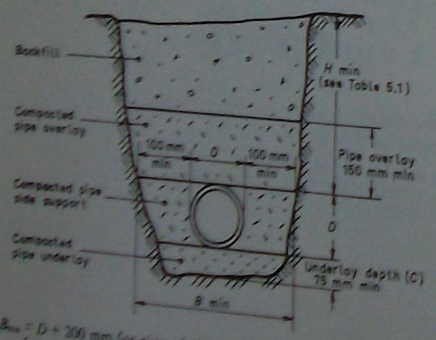

B_{min} = D + 200 mm for pipe of 125 mm nom. OD and above, or 2D for pipe smaller than 125 mm nom. OD.

Fig. 5.1. TYPICAL INSTALLATION IN A TRENCH

TABLE 5.1
MINIMUM COVER OVER PIPE
(Dimension *H* of Fig. 5.1)

Not subject to vehicular loading	300 mm
Subject to vehicular loading—	
not in roadways	450 mm
in sealed roadways	600 mm
under unsealed roadways	750mm
Pipes in embankment conditions or subject to construction equipment loading	750 mm

NOTES:

1. Requirements of local authorities may specify different depths for local conditions.
2. For deformation due to external loading, designers should refer to AS CA68.

(b) *Underlay preparation.* Unless otherwise specified, a carefully graded continuous cushion of underlay material of minimum thickness 75 mm should be provided in the bottom of the trench. Depending on which type of underlay material is selected, various degrees of compaction will be required to ensure adequate uniform support for the pipe. For bedding of types (a), (b) and (c) (see Clause 5.2.1.2), chases may have to be excavated in the bedding to prevent any sockets, flanges, or similar projections from bearing on the bedding.

Where bedding material of type (d) (see Clause 5.2.1.2) is used, cement mortar shall be packed into the space between the trench bottom and the pipe laid in the trench to attain the line, grade, and specified minimum cover under the pipe.

Where the pipeline is laid in undisturbed material on the trench bottom, which shall be free from hard objects such as stones, sharp projecting rocks, or tree roots (Type 3 bedding of AS CA68), the trench bottom should be trimmed to

COPYRIGHT

provide continuous support for the pipe. Chases may have to be excavated in the floor of the trench to prevent any sockets, flanges, or similar projections from bearing on the trench floor.

Where the excavation is in unstable ground or rock or where excessive excavation occurs, the depth of excavation and underlay preparation should be as specified to provide a uniform base to the bedding material.

(c) *Removal of pegs and packing.* In all cases care should be taken to remove all levelling pegs or temporary packing, such as wooden blocks, before pipelaying.

(d) *Pre-assembly and laying.* Pipes may be joined at ground level and then lowered into position without being dropped, care being taken to avoid straining the pipes or pipe joints. If rubber-ring joints have been used for jointing they should be checked after the pipe is positioned to ensure that the witness mark is still correctly positioned. The pipes should be positioned along the centreline of the trench. Bends of radius greater than 33 times the minimum outside diameter of the pipe may be accommodated by bending the pipe without undue stress; for curves of smaller radius preformed or moulded bends should be used.

Sufficient pipe side-support and pipe overlay material should be placed in the trench and compacted to restrain the pipes. Joints should be left uncovered for inspection and testing unless otherwise specified.

(e) *Testing.* The testing of the pipeline shall be in accordance with Section 5.3.

(f) *Pipe side-support and pipe overlay.* Pipe side-support material should be adequately compacted as specified in layers of not more than 150 mm. The pipe overlay material should be levelled and compacted in layers to a minimum height of 150 mm above the top of the pipe in the trench, or as specified, care being taken to preserve the correct alignment and grade of the pipeline.

(g) *Backfill.* Backfill material should then be placed on the pipe overlay and compacted as specified to re-fill the trench.

NOTE: Where shoring is used, special care should be taken to maintain compaction around the pipe during and after its withdrawal. Care should be taken not to damage the pipes during compaction of bedding material and backfill.

PART 6. INSTALLATION OF POLYETHYLENE PIPE SYSTEMS FOR SOIL, WASTE AND VENT APPLICATIONS

6.4 GENERAL REQUIREMENTS. When PE SWV systems are being installed, particular care should be taken to establish the correct grade and alignment. This should be carried out by suitable clipping, not by bending the installation.

All pipes and fittings installed in locations which may be subject to mechanical damage shall be suitably protected, including during the construction stage. Pipes and fittings shall not be placed adjacent to boilers or uninsulated hot water and steam lines.

6.5 PROTECTION AGAINST ULTRAVIOLET ATTACK. PE pipes of colours other than black (see Note 1) should be protected from direct sunlight.

NOTES:

1. Black pipes made from a compound complying with AS 1463 are not significantly affected by exposure to direct sunlight.
2. At this stage it is considered that exposure to sunlight for more than 2 months may degrade the properties of PE pipe other than black but the precise rate of degradation depends on the formulation of the raw material of the pipe and the conditions of exposure.

COPYRIGHT

STANDARDS AUSTRALIA

Australian Standard

Code of recommended practice for the construction of vitrified clay pipelines (up to and including 12-in diameter with flexible or rigid joint systems)

1 SCOPE. This code sets out a recommended practice for excavating, bedding and jointing buried vitrified clay pipelines with flexible or rigid joints. The code refers also to the tests for such systems (otherwise known as testing codes).

2 APPLICATION. The code applies to vitrified clay pipes up to and including 12 in diameter when laid in trenches in ground in which the pipes are to be considered as having special requirements, and that bedding techniques should be used to take advantage of the strength inherent in the pipes, thus giving consideration to their limitations.

3 PIPE LAYING.

3.1 General Laying Instructions. Pipes shall be protected during handling against impact shocks and free falls. Pipes shall be kept clean at all times during laying and jointing.

All pipes shall be laid true to line and grade. Deviations in vertical joint angles, or joining surfaces including gaskets for flexible joints, shall be slight.

For flexible jointed vitrified clay pipelines, all lubricants, primers, adhesives and other auxiliary materials used shall be as specified. Jointing materials shall be used in a workmanlike manner, fitted and jointed as specified. Approved mechanical aids may be employed in jointing and shall not apply large concentrated loads to the pipes. A joint shall be considered to consist of a single socket and spigot. In the circumstance in which more than one socket and spigot is to be laid in a length of pipe, the joints shall be staggered. In the rigid jointed vitrified clay pipelines, all joints shall be made in accordance with an approved jointing test.

Trenches shall be kept free from water while laying the pipes and shall be backfilled in accordance with the requirements laid down in this code as soon as possible after the inspection and testing prescribed in it, to enable this to be done without delay. Only clean, suitable approved backfill materials shall be used in such a manner and in such quantities as to prevent the pipes from being disturbed.

Adequate precautions shall be taken to prevent the ingress of backfilling where pipelines pass through a pipe seal.

3.2 Trenches: Laying Instructions.

3.2.1 Unsupported trenches. Trenches in which timber walls or excavations are to be placed shall be excavated completely with mechanical trenchers. Prior to excavation of the trench or excavation for the pipes shall be laid the contractor or authorized person shall be told the contractor or his agent of the line and height for the pipe grade setting marks.

Grades shall be interrupted at the face of any gutter by a compressible membrane, if it does not allow for expansion and movement of the pipe. Only where the pipe is fully encased on a 150 Nmm min. bed should be omitted.

All concrete shall have a slump between 4 to 6 in. Care shall be taken to provide adequate vibrating to prevent the concrete from flowing. The aggregate, if coarse, shall be compacted with suitable hand tine-thrusting apparatus. Mass fill to lining and inspection shall be kept open and accessible. Timbers shall not be withdrawn until authority by the supervising officer.

After jointing of the pipe has been completed, the concrete cradle shall be uniformly placed to each and on both sides of the pipe with sufficient concrete to provide support for at least the lower quadrant of the pipe. In no case shall the width of the concrete cradle be less than 1 in greater than the external diameter of the pipe. Where pipes are laid on steel, sufficient concrete shall be used to provide 6 in thickness around the barrel of the pipe.

3.2.2 Granular Bedding Construction. Where granular bedding is used, approved material shall be placed, compacted and brought to the specified thickness and level over the full width of the trench. Recess holes shall be formed in the consolidated bedding material to accommodate the socket of the pipes to allow effective bedding and even bearing along the full length of the pipe barrel. After laying and levelling the pipes, more material shall be placed and compacted evenly and carefully below and to each side of the pipes.

3.2.3 Mortar Bedding (Type S). Where mortar bedding is used, sufficient mortar of 1:4 mix shall be placed on the consolidated sub-grade and the pipe laid thereon to line and grade to ensure the correct dimensions for mortar bedding shown in Fig. 3. Recess holes shall be formed in the consolidated bedding material to accommodate the socket of the pipes to allow effective bedding and even bearing along the full length of the pipe barrel, and to allow for expansion and movement of pipes.

After laying and jointing and allowing the mortar and jointing materials to set, selected compacted fill shall be placed and compacted evenly and carefully on either side of the pipes and over the pipe to a height of 12 in above the barrel.

NOTE: With steel pipes, there should be a gap (1/2 in minimum) between the face of socket and spigot to allow for thermal expansion in the pipe barrels.

3.3 Ancillary Structures.

3.3.1 Manholes. Manholes shall be constructed at all branches, bends, alterations to grade or to a specified maximum distance apart of 400 ft or straight runs of sewer mains.

At the manhole in a rigid structure, flexible joints shall be provided on each side of the manhole to provide for differential settlement. Flexible joints must be built into the wall of the manhole during construction or after. Pipes of the manhole shall be provided with flexible jointed pipes set in the manhole walls. Where the sewer pipes join a manhole, the face of the socket and spigot of the pipe set in the manhole wall shall not extend more than 6 in from the outer wall of the manhole and the barrel extension should be covered to the manhole base.

Flexible jointed sewer pipes not less than 1 ft and not greater than 2 ft long shall be used to run the sewer mains on either side of the manhole to the pipes set in the manhole wall to permit play or to the pipes set in the manhole wall to permit a slight movement between the main and the manhole.

3.3.2 Junctions. All junctions formed in the pipeline shall be bedded, encased or covered with concrete to provide a firm foundation, except where the trenches allow such embedment is not required. Where constructed from such junctions shall be adequately supported to provide stability in all cases. On either side of a junction which has not been concreted, short lengths of flexible jointed pipe not less than 1 ft and not more than 2 ft long shall be installed to permit a relative movement between the flexible jointed sewer mains and the junction.

3.3.3 Break-ins. Where break-ins occur, the flexibility of the existing pipeline shall be preserved by the method detailed in Rule 3.3.2.

3.3.4 Anchor Points. Where necessary, on steep slopes, changes of grade and bends, anchor points shall be provided. Such anchor points shall preserve the flexibility of the pipeline as prescribed in Rule 3.3.2.

3.3.5 House Connections. Typical arrangements of connections of house connections are shown in Figs 10 to 13. The arrangements shown are typical only, but indicate the important factors to be considered when constructing house drains.

The prescribed requirements are as follows.

(i) All junction pipe fittings shall be bedded, encased or covered in concrete to protect such fittings from damage by the application of external loading on the fittings.

(ii) On either side of each fitting which has been concreted, short flexibly jointed pipes, between 1 and 2 ft in length shall be used to permit a relative movement between the flexibly main and the rigidly constructed house drains.

(iii) Vertical and stove vent pipes shall be supported in such a manner that unbalanced load does not affect the main sewer run.

(iv) Where necessary, house drain lines shall be anchored to the horizontal back runs, formed to the vertical to stop junctions on the main are minimized.

(v) A weakened plane shall be formed in the concrete, which shown on the drawings, to permit movement to occur without damaging the pipes.

(vi) Pipes or fittings where the discharge trap and are to flexibly jointed, where such components are integrated with the building structure and are supported accordingly.

STANDARDS AUSTRALIA

Australian Standard
Small septic tanks

SECTION 1. SCOPE AND GENERAL

1.1 SCOPE. This Standard specifies requirements for septic tanks suitable for the reception and treatment of sewage and sullage from households not exceeding 10 persons.

1.5 CAPACITY OF SEPTIC TANK. The capacity of the septic tank, measured below the invert of the outlet of the tank, shall comply with the requirements of the appropriate Statutory Authority as specified in Appendix G.

1.6 INTERNAL DIMENSIONS.

1.6.1 Operating depth. The internal design depth of liquids and solids in a septic tank, measured below the invert of the outlet of the tank, shall be not less than 900 mm.

1.7 INLET FITTING. The inlet to a septic tank shall be a square or swept entry angle type junction fitting of durable material and not less than 100 mm internal diameter or 100 mm × 120 mm internal cross-section, complying with AS 1260.2, AS 1415.2 or AS 1741, as appropriate, for the installation.

Figures 1.1, 1.2*, 1.3*, 1.4*, and Appendix F, Figures F1, F2 and F3 show details of inlets for typical precast concrete septic tanks.

Alternatively, as shown in Figure F1, the inlet shall consist of a 100 mm internal diameter pipe, complying with AS 1260.2, AS 1415.2 or AS 1741, which shall not be able to protrude beyond the internal wall of the tank and shall be contained by a vertical baffle. The distance between the downstream face of the baffle and the wall containing the inlet pipe shall be 100 mm to 150 mm measured at the invert of the inlet pipe. U-section baffle shall finish clear of the internal diameter of the inlet pipe.

The vertical leg of the inlet fitting or baffle shall extend downward for a distance of not less than 155 mm below the invert of the outlet fitting (see Clause 1.8).

The top of any inlet fitting or baffle shall be not less than 170 mm above the invert of the outlet pipe.

The clearance between the top of the vertical leg of the inlet fitting or baffle and the underside of the roof of the septic tank shall be not less than 50 mm.

Where fittings pass through the walls of tanks, such fittings shall be installed in such a manner as to provide a permanent watertight seal.

1.8 OUTLET FITTING. The outlet from a septic tank shall be a square or swept entry junction type of fitting of durable material and not less than 100 mm internal diameter or 100 mm × 120 mm internal cross-section, complying with AS 1260.2, AS 1415.2 or AS 1741, as appropriate.

Figures 1.1, 1.2*, 1.3*, 1.4*, and Appendix F, Figures F1, F2 and F4 show details of outlets for typical precast concrete septic tanks.

Alternatively, as shown in Figure F1, the outlet shall consist of a 100 mm internal diameter pipe, complying with AS 1260.2, AS 1415.2 or AS 1741, which shall not be able to protude beyond the internal wall of the tank and shall be contained by a vertical baffle. The distance between the upstream face of the baffle and the wall containing the outlet pipe shall be 100 mm to 150 mm measured at the invert of the outlet pipe. U-section baffle shall finish clear of the internal diameter of the outlet pipe.

The invert of the outlet fitting shall be less than 50 mm below the invert of the inlet fitting (see Clause 1.7 and Figures 1.1, 1.2*, 1.3* and 1.4*).

The vertical leg of the outlet fitting shall extend downward for a distance of not less than 330 mm below the invert of the outlet pipe.

The top of any outlet fitting or baffle shall be not less than 170 mm above the invert of the outlet pipe.

Where fittings pass through walls of tanks, such fittings shall be installed in such as manner as to provide a permanent watertight seal.

* Figures 1.2, 1.3 and 1.4 not included in handbook

COPYRIGHT

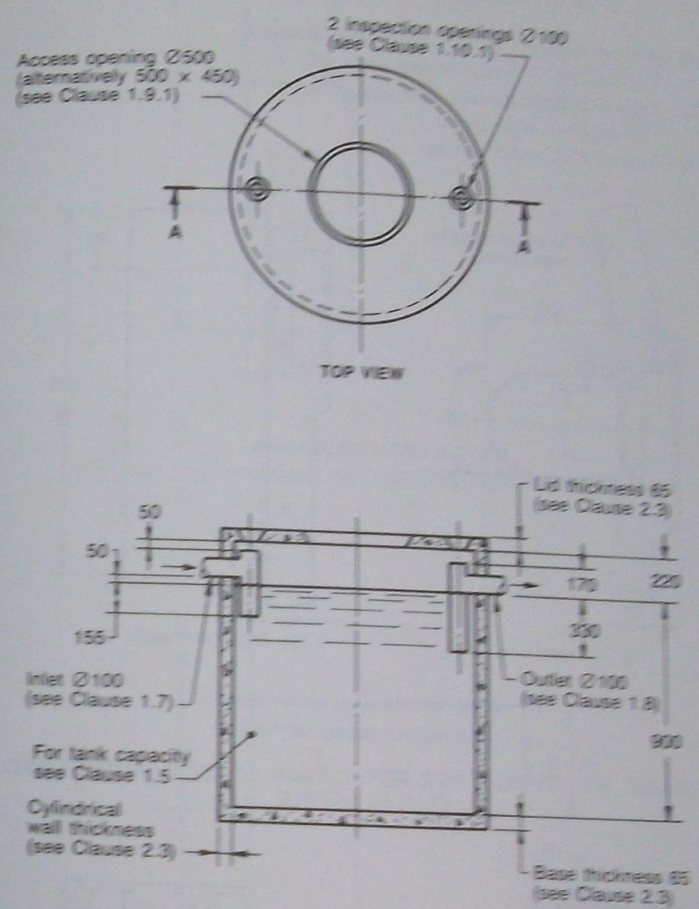

SECTION A-A

NOTE: All dimensions are minimum.

DIMENSIONS IN MILLIMETRES

FIGURE 1.1. TYPICAL CYLINDRICAL VERTICAL PRECAST CONCRETE SEPTIC TANK WITHOUT PARTITION

COPYRIGHT

APPENDIX F

TYPICAL INLET AND OUTLET FITTINGS

(This Appendix forms an integral part of this Standard)

The following drawings illustrate typical baffles and fittings:

(a) Figure F1 Typical PVC 'U'-section inlet and outlet baffle.
(b) Figure F2 Typical precast concrete inlet and outlet baffle.
(c) Figure F3 Typical PVC inlet fitting.
(d) Figure F4 Typical PVC outlet fitting.

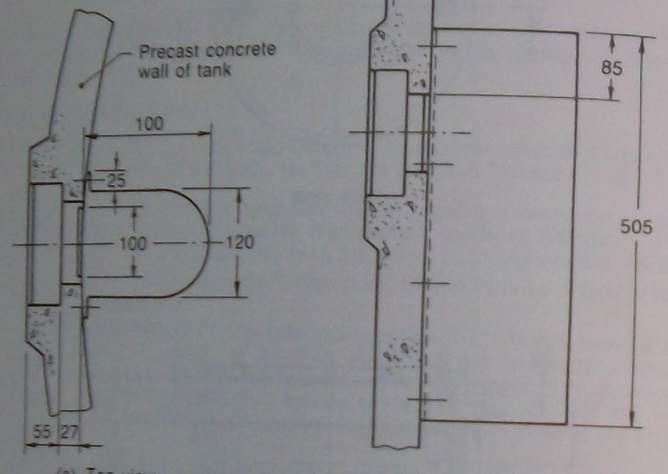

(a) Top view

(b) Section of septic tank

NOTE: All dimensions are minimum.

DIMENSIONS IN MILLIMETRES

FIGURE F1. TYPICAL PVC SEPTIC TANK 'U'-SECTION INLET AND OUTLET BAFFLE

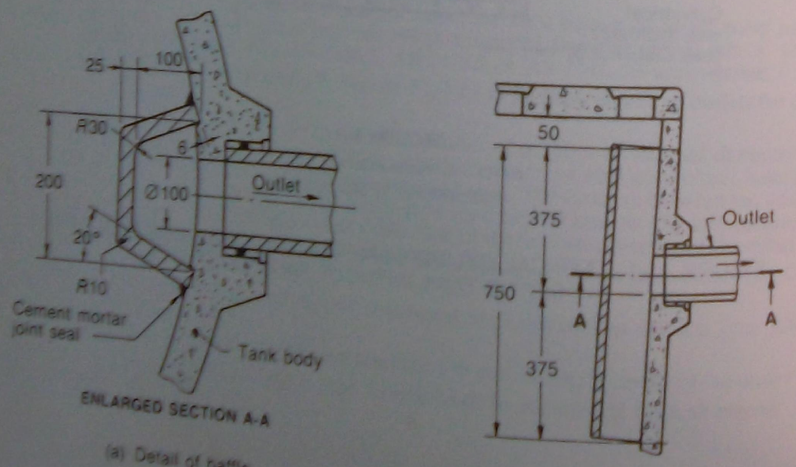

(a) Detail of baffle

(b) Section of septic tank

NOTE: All dimensions are minimum.

DIMENSIONS ARE IN MILLIMETRES

FIGURE F2 TYPICAL PRECAST CONCRETE INLET AND OUTLET BAFFLE

COPYRIGHT

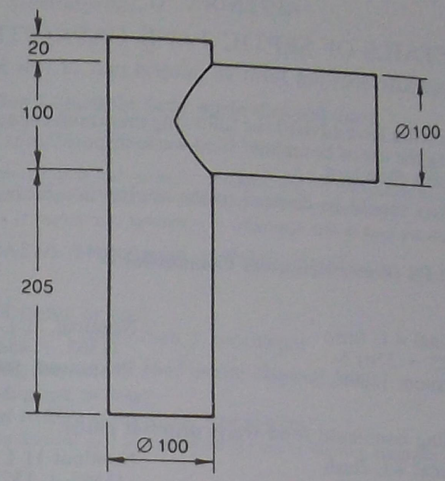

DIMENSIONS IN MILLIMETRES

FIGURE F3. TYPICAL PVC SEPTIC TANK INLET FITTING

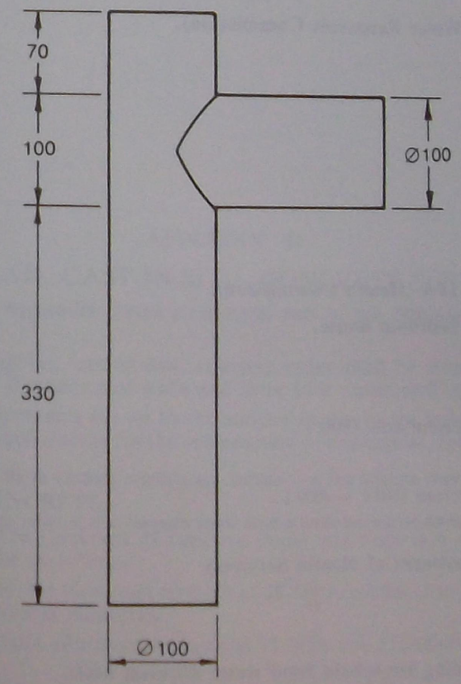

NOTE: All dimensions are minimum.

DIMENSIONS IN MILLIMETRES

FIGURE F4. TYPICAL UPVC SEPTIC TANK OUTLET FITTING

COPYRIGHT

APPENDIX G

DETAILS OF SEPTIC TANK CAPACITIES

(This Appendix does not form an integral part of this Standard)

G1 GENERAL. Authorities have advised the following minimum capacities for small septic tanks and requirements regarding the use of household food waste disposal units apply at the time of publication of this edition of this Standard.

For further details enquiries should be directed to the appropriate State Authority.

NOTE: The following symbols are used in this Appendix: n = number of persons; L = litres.

G2 NEW SOUTH WALES (Water Resources Commission).

G2.1 WC only.

Nominal 4 L flush	Nominal 11 L flush
(1025 + 35n) L	(1365 + 45n) L
Minimum 1200 L	Minimum 1600 L

G2.2 All wastes (excluding household food waste disposal units).

Nominal 4 L flush	Nominal 11 L flush
(1025 + 113n) L	(1365 + 137n) L
Minimum 1600 L	Minimum 2050 L

G2.3 All wastes (including household food waste disposal units).

Nominal 11 L flush
(2270 + 160n) L
minimum 3070

NOTE: Household food waste disposal units are not normally recommended for connection to septic systems.

G3 QUEENSLAND (Water Resources Commission).

G3.1 WC only.

(1140 + 45n) L
Minimum 1370 L.

G3.2 All wastes.

(1820 + 90n) L
Minimum 2280 L.

G4 SOUTH AUSTRALIA (Health Commission).

G4.1 All wastes for 3 bedroom house.

Minimum 3000 L.

G4.2 All wastes.

For each additional bedroom add 1000 L.

NOTES:

1. Where household food waste disposal unit is connected, the effective capacity of all wastes tank for a three bedroom house must be increased from 3000 L to 4000 L.
2. Specific approval is required before installing a food waste disposal unit in other than a private home.

G5 TASMANIA (Department of Health Services).

G5.1 WC only.

1600 L minimum.

G5.2 All wastes (excluding household food waste disposal unit).

2500 L minimum.

NOTES:

1. The above minimum capacities apply to Class 1 Buildings only.
2. Household food waste disposal unit not permitted to be connected to the septic system.
3. Two or more chambers are required in all septic tanks.

COPYRIGHT

G6 VICTORIA (Health Commission).

G6.1 WC only.

Nominal 1800 L.

G6.2 All wastes (excluding household food waste disposal unit).

Nominal 3000 L.

NOTES:

1. Household food waste disposal units not normally recommended for connection to the septic system.
2. Where household food waste disposal unit is connected, the effective capacity of all wastes tank must be increased to nominal 4000 L.

G7 WESTERN AUSTRALIA (Department of Public Health).

G7.1 WC and urinals.

1820 L Minimum (5 bedrooms or less)
1360L + 90L/bedroom (where more than 5 bedrooms)

G7.2 All wastes (excluding household food waste disposal unit).

3180 L Minimum (5 bedrooms or less)
1820L + 270L/bedroom (where more than 5 bedrooms)

NOTE: Household food waste disposal unit not approved for use in Western Australia.

APPENDIX H

RECTANGULAR, CAST-IN-SITU, CONCRETE SEPTIC TANKS

(This Appendix forms an integral part of this Standard.)

H1 GENERAL. Rectangular, cast-in-situ, concrete tanks shall be structurally sound, smooth internally, and watertight. Rendering of walls and floor with waterproof mortar shall be accepted.

Unless more stringent requirements are set by the relative Authority the following requirements may be taken as the minimum requirements for the construction of rectangular, cast-in-situ, concrete septic tanks.

H2 THICKNESS OF CONCRETE.

H2.1 Floor and walls. The thickness of concrete floors and walls in a rectangular, cast-in-situ, concrete septic tank shall be as follows:

(a) Unreinforced concrete having minimum strength of 25 MPa, not less than 150 mm unless otherwise approved by the responsible Authority.

(b) Reinforced concrete having minimum strength of 25 MPa and F72 reinforcement. Thickness not less than 100 mm.

H2.2 Roof. The roof of a rectangular, cast-in-situ, concrete septic tank shall be a slab of reinforced concrete, and shall be designed to comply with the requirements of Clause 1.13.

H3 COVER TO REINFORCEMENT. The cover to the reinforcement in a rectangular, cast-in-situ, concrete septic tank for roof slabs, floors, walls, and covers to access and inspection openings, shall be not less than 40 mm.

COPYRIGHT

APPENDIX J

RECTANGULAR, BRICK, SEPTIC TANKS

(This Appendix does not form an integral part of this Standard.)

J1 GENERAL. A rectangular, brick septic tank shall be constructed in-situ from clay, concrete or sand-lime building bricks or blocks.

If hollow blocks are used, reinforcing rods shall be used in accordance with the manufacturer's instruction.

Unless more stringent requirements are set by the relative Authority, the following requirements may be taken as the minimum requirements for the construction of rectangular, brick septic tanks.

J2 FLOOR. The floor to a rectangular, brick, septic tank shall be reinforced concrete not less than 100 mm thick. The cover to the reinforcement shall be not less than 40 mm.

J3 WALLS. The walls of a rectangular, brick, septic tank shall be not less than 230 mm thick and shall be rendered smooth with waterproof mortar.

J4 ROOF. The roof of a rectangular, brick, septic tank shall be a slab of reinforced concrete, designed to comply with the requirements of Clause 1.13.

COPYRIGHT

STANDARDS AUSTRALIA

Australian Standard

Code of practice for disposal of effluents from small septic tanks

FOREWORD

In a septic tank, even if of adequate design and capacity, only a portion of the suspended solids settle in the tank. The dissolved organic matter and some of the suspended matter are discharged from the tank in the effluent and will cause a health hazard and/or an odour nuisance if the effluent is not adequately disposed of.

When assessing the feasibility of a proposed effluent disposal scheme involving absorption of effluent in soil, consideration should be given to factors such as:

(i) The area of land available for the absorption area.

(ii) The risk of prejudicing adjoining property, underground water supplies, swimming and wading pools and the like, by seepage from the area.

(iii) The permeability and depth of the soil on the proposed site for the absorption area. Percolation tests are useful but the season of the year when the tests are made and many other factors have to be taken into account when assessing the results of the tests. Long term efficiency of an absorption area can be adversely affected by high concentrations of chlorides and sulphides in the soil.

(iv) Any seasonal changes in ground water level and absorptive capacity of the site.

(v) The climate and its effect on the evaporation from the site, e.g. distribution of rainfall, hours of sunshine, prevalence of wind.

(vi) The effect of seepage and surface water from surrounding areas at higher levels than the proposed absorption area.

Because of the above factors and others, this Code stresses the need to obtain the approval of the relevant Statutory Authority in the area before embarking on a scheme for the disposal of septic tank effluent. A separate and additional approval or licence may be necessary if disposal by absorption well or bore is contemplated.

COPYRIGHT

STANDARDS AUSTRALIA

Australian Standard
Technical drawing

Part 301: Architectural drawing

2.3 SYMBOLS. The symbols given in Table 2.2 should be used to indicate relevant features on drawings prepared for general or communication purposes, but only where drawing to scale is impracticable.

NOTE: Symbol size and line thickness will depend on drawing size and scale. Symbols given have therefore not been dimensioned.

TABLE 2.2
GENERAL SYMBOLS

Symbol	Meaning
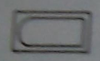	BATH
	SHOWER BATH
	SHOWER
	BASIN
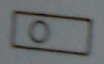	VANITY BASIN (Locate basin as required)
	WATER CLOSET
	BIDET
	SINK—DOUBLE BOWL (Locate bowls as required)

COPYRIGHT

TABLE 2.2 (continued)
GENERAL SYMBOLS

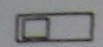	SINK—SINGLE BOWL (Locate bowl as required)
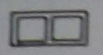	TUB—DOUBLE
	TUB—SINGLE
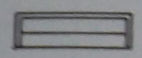	URINAL STALL
	DRINKING TROUGH
	DRINKING FOUNTAIN
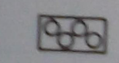	HOTPLATES

NOTE: It is recognized that numerous tracing templates with differing symbols are available, and that the increasing application of computer-aided drafting packages will generate an ever wider variation of symbols. The symbols given are examples of standard symbols that can be drawn manually. Where possible, the symbols should be drawn without their associated abbreviations, to minimize clutter and improve clarity. Abbreviations should not be required, for example, where a larger scale drawing is cross-referenced, but may be required if there is a need for other symbols of similar appearance.

Examples of other items not included are:

Refrigerator, dishwasher, clothes washer, clothes dryer, cooker, wall oven, cleaner's sink. Most of these would be squares or rectangles (possibly with a diagonal through them) and the associated abbreviation.

Cleaner's sink would look very similar to tub-single, therefore identification letters would need to be added to the symbol.

Some symbols shown in AS 1100, Part 401, are applicable to block and site plans.

COPYRIGHT

STANDARDS AUSTRALIA

Australian Standard
Technical drawing

Part 401: Engineering survey and engineering survey design drawing

TABLE 3.9(A)

SYMBOLS FOR SEWERAGE

NOTE: See also Table 2.2.1(A), Table 2.2.1(B) and Table 2.2.1(C). *

Symbol		Meaning
Plan	Section	
	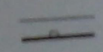	Chamber— 300 mm and under
	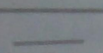	Over 300 mm
		Manhole— 300 mm and under
	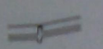	Over 300 mm
		Manhole with access chamber— 300 mm and under
		Over 300 mm
		Overflow manhole
	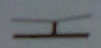	Lamphole
	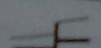	Vertical and near vertical— 300 mm and under
	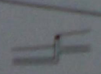	Over 300 mm
		Vent shaft

* Not included in handbook

COPYRIGHT

TABLE 3.9(A) *continued*

Symbol		Meaning
Plan	Section	
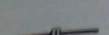	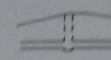	Shaft
	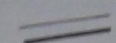	Sewer main— 300 mm and under
	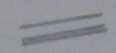	Over 300 mm
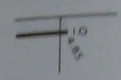		Dead end
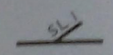	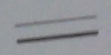	Side lines— Surveyed
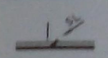		Non-surveyed
		Flow arrow
		Drainage arrow
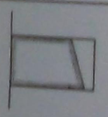		Drainage limits
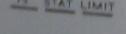		Statutory limit
		Concrete encasing
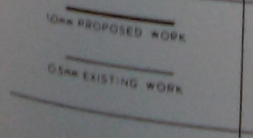		Pipes
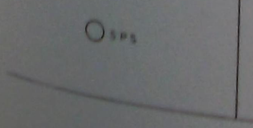		Pumping station

COPYRIGHT

TABLE 3.9(A) *continued*

Symbol		Meaning
Plan	Section	
— — —		Rising main
ST		Septic tank

COPYRIGHT

Chapter 4
Roof plumbing and rainwater drainage

Students are required to purchase a copy of the current Australian Standard, National Plumbing and Drainage Code, Part 3: Stormwater drainage (AS 3500.3) as it will be used as a class text.

This chapter supplements the above Australian Standard and consists of extracts from Australian Standards relevant to the following topics:

Page

Self-supporting metal roof—Design and installation
(See AS 1562—1980, Design and installation of metal roofing) 76
Metal gutter, downpipes etc—Specified requirements
(See AS 2179—1986, Metal rainwater goods—Specification) 80
Metal gutters and downpipes-Incompatible materials, installation and jointing methods
(See AS 2180—1986, Metal rainwater goods—Selection and installation) 84
Symbols and abbreviations 90

COPYRIGHT

STANDARDS AUSTRALIA

Australian Standard

Design and installation of metal roofing

SECTION 1. SCOPE AND DEFINITIONS

1.1 SCOPE. This standard relates to the design and installation of self-supporting metal roofing having no transverse joints.

SECTION 3. DESIGN

3.1 GENERAL. The roof shall be designed and constructed so as to prevent the penetration of rain to the inner part of the building.

NOTE: Guidance on roof ventilation is given in Appendix B.

3.2 LOADINGS.

3.2.1 General. The roof sheeting and its fastenings and the roof structure and its fastenings shall be designed to withstand, with the appropriate margins of safety, forces not less than the minimum design forces derived from AS 1170, for the particular circumstances in which the roofing-and-fastening system will be used.

NOTE: The designer's attention is drawn to the necessity to provide at the corners of roofs, and at eaves, ridges, and verges, for combinations of high negative wind pressures on the upper surfaces of the roof, with high positive pressures on the underside. (For further information on pressure factors, see AS 1170, Part 2.)

The roof sheeting and its fastening system shall be regarded as being designed for the appropriate margin of safety if on being tested in accordance with Section 5 of this standard they fulfil the requirements of that Section.

3.2.2 Loadings During Construction. Such other forces as may reasonably be expected to apply during the construction of the roof shall be taken into account. Particular attention shall be given to the effect on the intensity of internal wind pressures of the possible temporary absence of ceilings, walls, glazing and the like.

3.2.3 Bracing. Roof sheeting shall be deemed not to restrain effectively the lateral deflection of that flange or surface of the purlins to which the sheeting is connected except in cases where experimental (test) data are available to show that the roof sheeting and its fixings, tightened to a degree which may reasonably be expected in practice, are able to provide such restraint.

NOTES:

1. The designer's attention is drawn to the fact that purlins are subject to reversals of stress due to internal pressure and to external suction, during construction and in service.
2. Practical demonstration of bracing ability is particularly important for roofs incorporating provision for thermal movement.

3.2.4 Instructions on Installation. The manufacturer shall indicate in fixing instructions supplied with the sheeting, the wind force conditions for which the system is designed. Specific instructions shall be given on the fixing of the various areas of a roof, with particular attention to special features of the system including fixing at eaves, ridges, verges and corners.

3.2.5 Thermal Expansion. In cases where thermal expansion of the sheeting would otherwise have a deleterious effect, adequate provision shall be made to accommodate such expansion.

Where thermal expansion of roof sheeting is restrained, due consideration shall be given to the forces so imposed.

NOTES:

1. Coefficients of linear expansion are given in Table 3.1.
2. An appreciation of the amount of expansion that occurs in metal roofs may be gained from the arbitrary example for steel which has the lowest coefficient of linear expansion of the roofing materials considered in this standard:

   A 15 m sheet expands through approximately 12 mm for a temperature variation from 0°C to 65°C.

TABLE 3.1

COEFFICIENTS OF LINEAR EXPANSION

Metal	Coefficient of linear expansion K^{-1}
Aluminium	24×10^{-6}
Copper	17×10^{-6}
Steel, zinc-coated and aluminium/zinc-coated	12×10^{-6}
Stainless steel	17×10^{-6}
Zinc	26×10^{-6}

3.3 SUPPORTING STRUCTURE. The structure supporting the roof sheeting should be designed in accordance with the requirements of one or more of the following standards as appropriate:

AS 1250 AS 1475 AS 1480
AS 1481 AS 1538 AS 1664
AS 1684 AS 1720

3.4 SLOPE OF ROOF. The slope of the sheeting on the finished roof shall be such that no leakage of the sheeting on the side laps will occur under rainfall conditions equivalent to a rate of 125 mm/h for a duration of 10 min.

NOTES:

1. It is considered necessary that for adequate drainage, the roof slope be not less than 1 in 60.
2. Attention is drawn to the fact that deflection of a roof structure will alter the roof slope. The initial slope must, therefore, include an allowance for any permanent deflection of the roof structure, especially in timber structures.

3.5 PURLINS AND BATTENS.

3.5.1 General. Purlins and battens used for the support of roof sheeting shall comply with the requirements of Clauses 3.5.2 and 3.5.3.

COPYRIGHT

3.5.2 Alignment. The alignment and purlins and battens shall comply with the following requirements:

(a) Any mismatch at the abutting ends of purlins and battens shall not exceed 2 mm.

(b) The tops of the purlins or battens shall be substantially in a plane parallel to the specified roof slope. Deviations from the plane shall be accepted provided that any deviation does not exceed 5 mm per metre of purlin or batten spacing and that the deviations are smooth.

3.5.3 Width and Depth. The sizes of purlins and battens shall be determined in accordance with the provisions of the appropriate design code as listed in Clause 3.3. Notwithstanding the requirements of Clause 3.3, in respect of light timber construction timber battens shall have a nominal width of not less than 75 mm, and the nominal depth shall be not less than 38 mm, to ensure adequate holding power for the fastenings without splitting of the timber.

3.6 FIXING OF ROOF MEMBERS. Fasteners used for the fixing of roof sheeting to purlins and battens, purlins and battens to rafters and trusses, rafters to wall plates, trusses to walls and columns, and wall plates to walls, shall be designed to resist the forces specified in Clause 3.2. Particular attention shall be given to combinations of internal wind pressure and external wind suction.

In circumstances where slopes steeper than 22 degrees are used, consideration shall be given to the anchoring of the sheets against movement down the slope. In addition, in circumstances where sheet fixing would otherwise allow non-returnable thermal movement to take place, provision shall be made for suitable anchoring of the sheets (see Clause 3.2.4).

3.7 ROOF DRAINAGE.

3.7.1 Gutters, Downpipes and Outlets. Gutters, downpipes and outlets shall comply with the appropriate requirements of AS 2179.

3.7.2 Drainage from Other Roofs. Gutters and downpipes from roofs shall not discharge on to self-supporting metal roofing unless suitable means, e.g. spreaders, are adopted to circumvent the increased possibility of leakage.

Drainage from copper or copper alloy roofs shall not be discharged on to or into aluminium or aluminium alloy, zinc, or coated steel roofs, gutters, downpipes and the like.

3.8 PROTECTION AGAINST CORROSION.

3.8.1 General. Roof systems shall be designed so that direct contact between two or more incompatible metals or alloys does not occur.

NOTES:

1. Table 3.2 is given as a general guide to acceptable combinations of metals in the light of current knowledge.
2. If the atmosphere inside a building with a metal roof contains corrosive gases or vapours, some roof materials will require extra protection against the corrosive agents, especially if the roof is not lined. Such extra protection should apply to the roof fastenings and accessories also.

   The outside resistance of roofs of certain metals to corrosive agents is partly dependent on the washing action of rain and on freedom from ponding.

   The life of vulnerable materials in severe marine atmospheres and industrial areas with atmospheres contaminated by acid-bearing agents can be extended by the use of special painting procedures (see AS 2312).

3.8.2 Removal of Debris. On completion of the roof, all debris, such as cement, mortar and in particular, metal clippings and filings shall be removed.

3.9 WALKING AND STANDING ON ROOFS.

3.9.1 General. The manufacturer of the roof sheeting shall indicate the positions on the sheet on which persons may walk or stand without causing damage to the sheet, or shall indicate the necessity to provide temporary walkways.

NOTE: This information should be included in the fixing instructions supplied with the sheets and in trade literature.

TABLE 3.2

METALS AND ALLOYS BETWEEN WHICH DIRECT CONTACT IS ACCEPTABLE AS GOOD PRACTICE

Sheeting material	Material with which direct contact is permissible	
	Industrial and salt laden marine atmospheres	Urban, suburban and rural atmospheres
Aluminium and aluminium alloys	Aluminium, aluminium alloys recommended by this standard, aluminium/zinc-coated steel, stainless steel, zinc-coated steel	Aluminium, aluminium alloys recommended by this standard, aluminium/zinc-coated steel, stainless steel, zinc-coated steel
Copper and copper alloys	Copper, copper alloys, monel metal, lead	Copper, copper alloys, monel metal, lead
Stainless steel	Stainless steel, lead	Stainless steel, lead
Zinc-coated steel	Zinc, zinc-coated steel, aluminium/zinc-coated steel, lead, stainless steel	Zinc, zinc-coated steel, aluminium/zinc-coated steel, zinc-sprayed steel, aluminium, lead, stainless steel
Aluminium/zinc-coated steel	Zinc, zinc-coated steel, aluminium/zinc-coated steel, aluminium, stainless steel	Zinc, zinc-coated steel, aluminium/zinc-coated steel, zinc-sprayed steel, aluminium, stainless steel
Zinc	Zinc, zinc-coated steel, aluminium/zinc-coated steel, lead, stainless steel	Zinc, zinc-coated steel, aluminium/zinc-coated steel, zinc-sprayed steel, aluminium, lead, stainless steel

NOTE: Lead must not be in contact with aluminium, aluminium alloys or aluminium/zinc-coated steel.

COPYRIGHT

3.9.2 Provision of Walkways. Where it is necessary to use the roof as an accessway, properly constructed walkways or walk boards shall be provided (see AS 1657).

SECTION 4. INSTALLATION

4.1 SAFETY PRECAUTIONS. No person other than workmen authorized by the roofing contractor shall be permitted access to any area over which the sheeting is being laid except as required for supervision and inspection.

Special care shall be exercised when long-length sheeting is being handled and particularly so in windy conditions. Should work be interrupted for any reason, all loose sheeting and/or incomplete sections shall be adequately secured against possible movement by wind.

4.2 TRANSPORT, HANDLING AND STORAGE. Roofing materials shall be transported and handled so that no damage occurs during these operations. Roofing materials shall be protected from damage while stored on the site and shall be stacked in sheltered positions, preferably near parts of the building to which they are to be fixed.

Where possible, sheets shall be stacked on firm and level ground, with timber or other packing beneath them, preferably in the bundles or packs in which they were consigned. The height of such stacks shall not exceed 1 m. If of necessity, they are placed in an exposed position, they shall be secured against possible movement by the wind.

4.3 SUPPORTS AT HIPS AND VALLEYS. Adequate support shall be given to the raking cut edges of roof sheets at hips and valleys. Hip and valley trimmers shall be provided, fixed flush with the top face of purlins and spanning between them, and shall run parallel to the edge of the sheeting and be placed so as to permit the fixing of the sheeting or of hip ridging.

4.4 LAYING THE SHEETING. Work shall start at the leeward end of the building, so that side laps are protected from the prevailing weather.

All sheets, when fixed, shall have full bearing on all purlins or battens which they cross.

All eaves sheets shall be supported as near to their ends as practicable, and the maximum unsupported end overhang for any type of sheet shall be as recommended by the sheeting manufacturer. Sheets at gable ends (verges) shall be supported for the full width of the sheet.

4.5 FASTENINGS AT EAVES, RIDGES, VERGES, AND CORNERS. Special care shall be exercised to ensure that the fixing of the roof at eaves, ridges, verges, and corners is in accordance with the manufacturer's special instructions in this regard (see Clause 3.2.4).

4.6 DRILLING, PIERCING AND CUTTING FOR SHEET FASTENINGS. Sheets may be cut and drilled as necessary, but holes shall not be punched unless this can be done without causing local distortions to the sheet.

The holes for fixings shall be 1.5 mm larger in diameter than that of the bolt or fixing screw used and, for roofing sheeting, they shall always be drilled through the crown of corrugations except where valley fasteners are used (see Note to Clause 4.7).

Holes for the fixing of sheeting shall be drilled in exact positions to suit the supporting members, i.e. on the centreline of timber or metal supports, of if hook bolts are used, as close as possible to the top edge of the supports. It is usual, therefore, to drill such holes with the sheeting in position.

4.7 FIXING THE SHEETING. All fasteners which pierce the sheeting shall be provided with adequate sealing to prevent leakage.

Fasteners shall be tightened sufficiently to form a weatherproof seal without deformation of the sheet profile and/or damage to the sealing washer.

NOTE: Crest fasteners have been used traditionally, especially with corrugated sheeting. They do not have the sealing disadvantage of valley fasteners as sealing the sheet at the pierced point is not so difficult. However, some recent systems, which involve the use of roof sheeting as bracing to the roof structure (see Clause 3.2.3), use valley fasteners in order to ensure intimate contact between the roof sheeting and the supporting structure. Where valley fasteners are used, the designer's attention is drawn to the necessity of ensuring adequate and permanent sealing around the pierced point to prevent the ingress of moisture flowing in the valley.

4.8 PROJECTIONS THROUGH ROOFS. Where any projections such as pipes, ducts, chimneys and the like, pass through roof surfaces, they shall be adequately flashed.

Such projections should preferably pass through the pan of pan type sheets or through the crest of the corrugation of corrugated type sheets. Where this is not possible because of the position or size of the projection, ribs or corrugations may be cut away as required, provided that such cut ribs or corrugations are adequately flashed and that where necessary all cut sections of the sheet are supported by additional roof framing.

In all cases, all cutting and flashing shall be arranged so that adequate provision is made for drainage of all pans or corrugations.

COPYRIGHT

APPENDIX B
ROOF VENTILATION

Condensation will occur on the surface of roofing when the temperature of the roof covering falls to or below the dew point of the air in contact with the sheeting.

Climatic conditions in many parts of Australia are such that condensation of this type may occur.

Water vapour from any source whatsoever should not be vented into the roof space, and to prevent this occurrence it is recommended that a vapour barrier be included in the roof system particularly in areas where condensation is known to cause trouble. Vapour barriers commonly used include impermeable plastics films and metallic foils. Vapour barriers should be placed so as to prevent the entry of water vapour into the roof space. This is effected by placing the vapour barrier on the underside ('warm' side) of the roof lining, and so far removed from it as practicable. Any separate insulating material included in the roof system should be above (on the 'cold' side) of the vapour barrier. Where the building has a ceiling, the vapour barrier should be placed on the underside ('warm' side) of the ceiling, but for aesthetic reasons it is usually placed immediately above the ceiling and under any insulating material incorporated in the ceiling.

To preserve continuity of the vapour barrier, openings around light fittings recessed into ceilings, and around flues passing through ceilings, should be adequately sealed to prevent the passage of water vapour.

When impermeable insulation materials, such as aluminium foil, are used in proximity to metal roofing, the space between the roof sheets and the insulating materials should be adequately ventilated to permit the evaporation of any condensate which may collect on the insulating material.

NOTE: For further information on the use of vapour barriers see Notes on the Science of Buildings Nos 61 and 78 published by the Commonwealth Experimental Building Station.

COPYRIGHT

STANDARDS AUSTRALIA

Australian Standard
Metal rainwater goods—Specification

SECTION 1. SCOPE AND GENERAL

1.1 SCOPE. This standard specifies requirements for metal rainwater goods. It applies also to metal accessories, metal fasteners, and metal tanks for storage of rainwater.

NOTE: Guidelines on requirements that must be specified by the purchaser and by the supplier and/or manufacturer, and those that must or may be agreed upon at the time of enquiry or order, are detailed in Appendix A.

1.2 APPLICATION. Metal rainwater goods and tanks, metal accessories and metal fasteners shall comply with the relevant Sections of this standard as follows:

Section 1—Scope and General
Section 2—Materials
Section 3—Dimensions
Section 4—Rainwater Storage Tanks
Section 5—Marking

1.3 REFERENCED DOCUMENTS. The following standards are referred to in this standard:

AS 1397	Steel Sheet and Strip—Hot-dipped Zinc-coated or Aluminium/Zinc Coated
AS 1432	Copper Tubes for Water, Gas and Sanitation
AS 1444	Wrought Alloy Steels—AISI-SAE Standard, Hardenability (H) and Stainless Series
AS 1445	76 mm Pitch Corrugated Hot-dipped Zinc-coated or Aluminium/Zinc-coated Steel Sheet
AS 1449	Wrought Alloy Steels—Stainless and Heat-resisting Steel Plate, Sheet and Strip
AS 1566	Copper and Copper Alloys—Rolled Flat Products
AS 1567	Copper and Copper Alloys—Wrought Rods, Bars and Sections
AS 1572	Copper and Copper Alloys—Seamless Tubes for Engineering Purposes
AS 1573	Copper and Copper Alloys—Wire for Engineering Purposes
AS 1650	Galvanized Coatings
AS 1734	Wrought Aluminium and Aluminium Alloy Flat Sheet, Coiled Sheet, and Plate for General Engineering Purposes
AS 1789	Electroplated Coatings—Zinc on Iron or Steel
AS 1866	Wrought Aluminium and Aluminium Alloy Extruded Rod, Bar, Solid and Hollow Shapes for General Engineering Purposes
AS 1867	Wrought Aluminium and Aluminium Alloy Drawn Tubes for General Engineering Purposes
AS 1874	Aluminium Ingots and Aluminium Alloy Ingots and Castings
AS 1881	Zinc Alloy Ingots (for Pressure Die-casting) and Zinc Alloy Pressure Die-castings
AS 1897	Electroplated Coatings on Threaded Components (Metric Coarse Series)
AS 2180	Metal Rainwater Goods—Selection and Installation.
ASTM A167	Standard specification for Stainless and heat-resisting Chromium-Nickel, steel plate, sheet and strip
ASTM B164	Standard Specification for Nickel-Copper Alloy Rod, Bar and Wire

1.4 DEFINITIONS. For the purpose of this standard, the following definitions apply:

1.4.1 Rainwater goods—includes eaves guttering, box guttering, ogee guttering, valley guttering, ridge and hip capping, barge capping, parapet flashing, downpipes, and rainwater tanks.

1.4.2 Accessories—includes barge rolls, stop ends, gutter straps, elbows and bends, gutter mitres, flashings, nozzles, notched birdproofing, and downpipe straps.

NOTE: Downpipe straps are also known as 'straps' and 'astragals'.

1.5 DESIGNATION.

1.5.1 General. Metal rainwater goods shall be designated according to—

(a) function;

(b) material of construction; and

(c) size.

1.5.2 Function. The designations according to function shall be as follows:

Function	*Designation*
Eaves gutter, ogee	EO
Eaves gutter, quad	EQ
Eaves gutter, rectangular	ER
Internal gutter, box	IB
Valley gutter, vee	VV
Capping, ridge	CR
Downpipe, circular	DC
Downpipe, rectangular	DR
Downpipe, square	DS

COPYRIGHT

1.5.3 Material of construction. The designations according to material of construction shall be as follows:

Material	*Designation*
Aluminium and aluminium alloys	A
Aluminium/zinc-coated steel	AZS
Copper and copper alloy	C
Hot-dipped zinc-coated steel	ZS
Stainless steel	SS
Zinc	Z

SECTION 2. MATERIALS

2.2 FREEDOM FROM DEFECTS. Materials manufactured, supplied and used for the construction of metal rainwater goods and accessories shall be free from laminations and other defects detrimental to subsequent processing and end use. They shall be supplied clean, without ripples, stains or damage to the surface coating which will affect serviceability and appearance.

2.3 ALUMINIUM AND ALUMINIUM ALLOYS.

2.3.1 General. Rainwater goods of aluminium or aluminium alloy may be plain, embossed, clad with an aluminium/zinc alloy, prepainted or anodized.

2.3.2 Rainwater goods. Aluminium and aluminium alloys used for rainwater goods shall be of the 1000, 3000, 5000 or 6000 series, and shall comply with AS 1734, AS 1866 or AS 1867, as appropriate.

2.3.3 Accessories. Aluminium and aluminium alloys used for accessories shall comply with the requirements of Clause 2.3.2. Alternatively, accessories may be of aluminium alloy castings complying with AS 1874.

2.3.4 Fasteners. The following may be used as fasteners for rainwater goods and accessories of aluminium and aluminium alloys:

(a) Aluminium and aluminium alloys complying with Clause 2.3.2.

(b) Stainless steel complying with the requirements of AS 1444 and ASTM A167 Grade 304, Grade 305 or Grade 316.

2.4 ALUMINIUM/ZINC-COATED STEEL.

2.4.1 General. Rainwater goods of aluminium/zinc-coated steel may be plain, baked prepainted, or laminated organic coated.

2.4.2 Rainwater goods. Aluminium/zinc-coated steel used for rainwater goods shall comply with AS 1397 with a minimum coating class of AZ150.

2.4.3 Accessories. Aluminium/zinc-coated steel used for accessories shall comply with Clause 2.4.2.

2.4.4. Fasteners. The following may be used as fasteners for rainwater goods and accessories of aluminium/zinc-coated steel:

(a) Aluminium and aluminium alloys complying with Clause 2.3.2.

(b) Stainless steel complying with the requirements of AS 1444 and ASTM A167 Grade 304, Grade 305 or Grade 316.

(c) Zinc-coated steel complying with the following requirements, as appropriate:

(i) AS 1789 Service condition 4, with chromate conversion coating type C (iridescent).

(ii) AS 1897 Service condition 3 (severe), with chromate conversion coating type C (iridescent).

(iii) AS 1650 Galvanized coatings.

2.5 COPPER AND COPPER ALLOYS.

2.5.1 General. The temper of copper and copper alloys shall be appropriate to, and most practicable for, the necessary forming operations.

2.5.2 Rainwater goods. Copper and copper alloys used for rainwater goods shall comply with AS 1432, AS 1566 or AS 1572, as appropriate.

2.5.3 Accessories. Copper and copper alloys used for accessories shall comply with AS 1566.

2.5.4 Fasteners. Copper and copper alloys used as fasteners for rainwater goods and accessories of copper and copper alloys shall comply with AS 1567 or AS 1573.

2.6 ZINC-COATED STEEL.

2.6.1 General. Rainwater goods of zinc-coated steel may be plain, baked prepainted, or laminated organic coated.

2.6.2 Rainwater goods. Zinc-coated steel shall comply with materials specified in AS 1397 with a minimum coating class of Z275.

2.6.3 Accessories. Zinc-coated steel used for accessories shall comply with Clause 2.6.2.

2.6.4 Fasteners. Electroplated coatings of zinc-coated steel used as fasteners for rainwater goods and accessories of zinc-coated steel shall comply with the following, as appropriate:

(a) AS 1789 Service condition 4, with chromate conversion coating type C (iridescent)

(b) AS 1897 Service condition 3 (severe), with chromate conversion coating type C (iridescent).

(c) AS 1650 Galvanized coatings

2.7 STAINLESS STEEL.

2.7.1 Rainwater goods. Stainless steel used for rainwater goods shall comply with AS 1449 according to the intended application as follows:

Intended application	*AS 1449 Grade*
Urban atmospheres Suburban atmospheres Rural atmospheres	301, 302, 304 or 316
Marine (salt-laden) atmospheres Industrial atmospheres	316

2.7.2 Accessories. Stainless steel used for accessories shall comply with Clause 2.7.1.

COPYRIGHT

2.7.3 **Fasteners.** Stainless steel used as fasteners for stainless steel rainwater goods shall be of the following grades according to the grade of stainless steel used in the rainwater goods and accessories:

Grade used in rainwater goods and accessories	*Grade for fasteners*
301, 302 or 304	See AS 1444-Table 2.2, ASTM A167-grade 305, or ASTM B164-alloy 400 (monel).
316	See ASTM A167-grade 305 or ASTM B164-alloy 400 (monel).

2.8 ZINC.

2.8.1 **Rainwater goods.** Zinc material used for rainwater goods shall be a zinc alloy containing copper or titanium or both. The copper content shall not exceed 0.8 percent and the titanium content shall not exceed 0.2 percent. Only hard to half-hard material shall be used.

2.8.2 **Accessories.** Zinc material may be used for accessories as follows:

(a) Fabricated components wholly of zinc shall be fabricated from zinc alloy complying with Clause 2.8.1.

(b) Zinc alloy pressure diecast components shall comply with AS 1881.

(c) Gutter brackets and mitre corner brackets may be fabricated from either—

(i) steel and subsequently zinc-coated in accordance with AS 1650; or

(ii) hot-dipped zinc-coated steel (see Clause 2.6.2).

2.8.3 **Fasteners.** The following may be used as fasteners for rainwater goods and accessories of zinc material:

(a) Aluminium and aluminium alloys complying with Clause 2.3.2.

(b) Stainless steel complying with the requirements of AS 1444 and ASTM A167 Grade 304, Grade 305 or Grade 316.

(c) Zinc-coated steel complying with the following requirements, as appropriate:

(i) AS 1789 Service condition 4, with chromate conversion coating type C (iridescent).

(ii) AS 1897 Service condition 3 (severe), with chromate conversion coating type C (iridescent).

(iii) AS 1650 Galvanized coatings.

SECTION 4. RAINWATER STORAGE TANKS

4.1 GENERAL. This Section details requirements for circular rainwater storage tanks constructed from hot-dipped zinc-coated steel or aluminium/zinc-coated steel.

4.2 MATERIALS. The base metal minimum thickness, grade, coating class and profile of circular rainwater storage tanks shall be as given in Table 4.1.

4.3 OUTLETS. The outlet shall be 20 mm minimum for up to and including capacities of 6600 L, and 25 mm minimum for larger sizes; and shall be double-fitted so that the fitting remains rigid in the tank. If necessary, a gusset may be used.

4.4 ACCESS HOLE. An access hole with a minimum diameter of 450 mm shall be cut at the top and covered with either a strainer or a top fixed securely to the top of the tank, above the high water level.

NOTE: For newly constructed tanks, it is advisable to make provisions for soluble chemical protector units in accordance with the manufacturer's specifications.

4.5 JOINTS AND FITTINGS.

4.5.1 Riveted and lapped joints.

4.5.1.1 *Bottoms.* The seams for bottoms shall be as follows:

(a) *Grooved seams.* For tanks of diameter up to and including 2.1 m, a grooved seam using a 6 mm groove, is acceptable.

(b) *Riveted seams.* For any tank size, riveted seams are acceptable and the overlap of sheets shall be 25 ± 3 mm. The spacing of rivets shall be not more than 50 mm on centres.

4.5.1.2 *Walls.* For walls of corrugated sheet, the end-lap shall be not less than 100 mm. Rivets shall be spaced at every corrugation.

4.5.1.3 *Girth seams.* The spacing of rivets around a girth seam shall be not greater than 300 mm on centres. The minimum size of rivets shall be No. 8 for solid rivets and 4.8 mm for blind rivets.

4.5.2 Fittings. The area of the overflow pipe shall be not less than the total area of the inlet pipe(s) into the tank.

COPYRIGHT

TABLE 4.1

BASE METAL MINIMUM THICKNESS, GRADE, COATING CLASS AND PROFILE OF CIRCULAR RAINWATER STORAGE TANKS

Component	Minimum thickness of base metal mm		Grade*	Coating class†	Profile—pitch times number of corrugations
	Size				
	⩽ 17 000 L or ⩽ 3 m dia.	> 17 000 L or > 3 m dia.			
Walls	0.60	0.80	G250	Z600 AZ200	76 × 8 76 × 10.5
Bottoms	0.60	0.80	G300	Z275 AZ150	Flat
Tops	0.60 0.40	0.60 0.60	G300 G300	Z275 AZ150	Flat cone

* In accordance with AS 1445.
† In accordance with AS 1397.

APPENDIX A
PURCHASING GUIDELINES

A2 INFORMATION TO BE SUPPLIED BY THE PURCHASER. The following information should be supplied by the purchaser:

(a) The type of metal rainwater goods, metal accessories and metal fasteners.
(b) The type of material.
(c) The designated size of the product.
(d) The length where applicable.
(e) The girth size where applicable.
(f) The thickness.
(g) Whether a certificate of compliance is required.
(h) Special requirements.

COPYRIGHT

STANDARDS AUSTRALIA

Australian Standard

Metal rainwater goods—Selection and installation

1.6 THERMAL EXPANSION.

1.6.2 Expansion joints. Expansion joints shall be incorporated in gutter runs as follows:

(a) Gutter runs with fixed ends shall incorporate an expansion joint if the length of the run exceeds that which would cause a free expansion of greater than 20 mm.

(b) Gutter runs with a free end shall incorporate an expansion joint if the length of the run exceeds that which would cause a free expansion of greater than 40 mm.

NOTE: It is accepted that at least half of the free expansion will be restrained by the gutter fixings.

Where expansion joints are required, the adjacent gutter lengths may be fitted with stop ends and separated by a gap of 25 mm. The gap between the stop ends should be bridged by a suitable saddle flashing.

NOTE: A guide to the maximum lengths of gutters between expansion joints is given in Table 1.2 based on maximum temperature differentials expected for aged materials exposed at major population centres.

1.7 AVOIDANCE OF CONTACT BETWEEN INCOMPATIBLE MATERIALS. To avoid any misunderstanding between an academic treatment of incompatible materials and the information contained in Table 1.3, it should be pointed out that the classifications are based on the premise that the area of a metal rainwater product is relatively large in comparison with that of its accessory or fastener material.

Some materials show a natural corrosion rate in the uncoupled condition. The natural corrosion rate, when coupled with any additional corrosion arising from bimetallic contact, will be the ultimate corrosion rate. This assumes that there is no aggressive chemical attack which can accentuate corrosion to a degree that added protection is required.

A 'Yes', i.e. 'acceptable' classification in Table 1.3 implies that, as a result of bimetallic contact, either no additional corrosion of the rainwater product will take place, or at the worst, only very slight additional corrosion. It also implies that the degree of corrosion shall not significantly shorten the service life of the rainwater product.

A 'No', i.e. 'not acceptable' classification in Table 1.3 implies that moderate to severe corrosion of the rainwater product shall occur, a condition which may result in a significant reduction in the service life of the rainwater product. Where the use of incompatible materials is unavoidable, they shall be separated by use of an impervious non-conducting material. However, it is preferred that systems be designed so that direct contact between two or more incompatible materials or alloys does not occur.

1.8 DRAINAGE. The rainwater system shall be designed to prevent drainage from one metal surface damaging another.

Drainage from copper and copper alloy roofs or pipes shall not be discharged onto other common materials in use for roofing components, as copper salts can lead to rapid deterioration of aluminium and zinc.

Drainage from inert roof materials onto zinc-coated steel can cause rapid corrosion. Common inert materials are prepainted metals, aluminium, aluminium/zinc coatings, stainless steel or glazed terracotta tiles.

Drainage from copper or copper alloy roofs or pipes shall not be discharged onto or into aluminium alloy, zinc, zinc-coated or aluminium zinc-coated steel gutters, downpipes and the like as copper salts can lead to rapid deterioration of aluminium and zinc. However, drainage from these materials onto copper is permitted.

Drainage from lead flashings onto aluminium/zinc-coated steel can cause rapid corrosion of aluminium/zinc-coated steel components.

TABLE 1.2

GUIDE TO MAXIMUM LENGTHS OF GUTTERS BETWEEN EXPANSION JOINTS

Raw metal of gutter	Annual temperature differential °C	Maximum length of gutter between expansive joints, mm	
		Free expansion, mm	
		20	40
Aluminium	65	12 800	25 600
Copper	80	14 800	29 600
Stainless steel	60	20 000	40 000
Steel	35	22 200	44 400
Zinc	35	10 200	20 400

COPYRIGHT

TABLE 1.3

ACCEPTABILITY OF DIRECT CONTACT BETWEEN MATERIALS

Rainwater product material	Accessory or fastener material											
	Aluminium and aluminium alloys		Copper and copper alloys		Stainless steel (300 series)		Zinc-coated steel and zinc		Aluminium/zinc-coated steel		Lead	
	Industrial and coastal	Rural	Industrial and coastal	Rural	Industrial and coastal	Rural	Industrial and coastal	Rural	Industrial and coastal	Rural	Industrial and coastal	Rural
Aluminium and aluminium alloys	Yes	Yes	No	No	Yes	Yes	Yes	Yes	Yes	Yes	No	Yes
Copper and copper alloys	No	No	Yes	Yes	No	Yes	No	No	No	No	No	Yes
Stainless steel (300 series)	No	No	No	No	Yes	Yes	No	No	No	No	No	Yes
Zinc-coated steel and zinc	Yes	Yes	No	No	Yes	Yes	Yes	Yes	Yes	Yes	No	Yes
Aluminium/Zinc-coated steel	Yes	Yes	No	No	Yes	Yes	Yes	Yes	Yes	Yes	No	No
Lead	No	No	Yes	Yes	Yes	Yes	No	Yes	No	No	Yes	Yes

LEGEND:
Yes—Acceptable. The degree of corrosion with these material combinations does not significantly shorten the service life of the end product.
No—Not acceptable. The degree of corrosion is such that service life may be significantly reduced. Such material combinations should be separated by a non-conducting paint or non-metallic impervious material.

1.10 DEBRIS. All guttering shall be kept free of debris such as leaves and any obstructions that will interfere with flow, cause ponding, or promote deposit-type corrosion.

NOTE: This may be achieved by the following methods:

(a) Debris guards. Debris guards provided along gutters to prevent choking of gutters and gutter outlets.

(b) Maintenance cleaning. Cleaning of gutters and gutter outlets at regular intervals.

(c) Gutters designed to exclude debris.

1.11 REMOVAL OF DEBRIS AFTER INSTALLATION. On completion of the installation of all guttering and roofing, all debris such as cement, mortar, and in particular, metal clippings and filings shall be removed.

SECTION 2. INSTALLATION

2.1 EAVES AND INTERNAL BOX GUTTERS.

2.1.1 Gutter falls. Gutters shall be provided with a minimum uniform fall towards the outlet as follows:

(a) Eaves gutters ..... 1 in 500.

(b) Internal box gutters ..... 1 in 200.

NOTE: Where gutters are installed without fall because of design or other considerations, ponding may occur which could considerably reduce the life of the gutter.

2.1.2 High-fronted eaves gutters. Where high-fronted eaves gutters are installed, care shall be taken to ensure that water will not flow back into the roof or building structure.

NOTE: Methods of preventing this flowback are as follows:

(a) Provision of slots in the front of the guttering.

(b) Provision of a lower level weir overflow at some point in the drainage system, e.g. rainhead.

(c) Suitable design of flashing and fixing of guttering to the fascia board.

2.1.3 Eaves gutter brackets.

2.1.3.1 *General.* Brackets shall be manufactured from material compatible with the guttering.

All brackets shall be designed for the specific guttering which they support in accordance with the following requirements:

(a) *Water load test.* The brackets shall be designed and spaced so that—

(i) when the guttering is full of water, the maximum deflection of the guttering in any direction is not greater than 10 mm; and

(ii) when the guttering is empty, the maximum residual deflection of the guttering in any direction is not greater than 2 mm.

(b) *Lateral load test.* When the guttering and its associated brackets are tested in accordance with Appendix B of AS 2179—

(i) the deflection under load shall be not greater than 50 mm; and

(ii) the permanent deflection shall be not greater than 10 mm.

2.1.3.2 *Position and spacing.* So that the gutter assembly meets the test requirements of Clause 2.1.3.1 and the gutter fall complies with Clause 2.1.1, eaves gutter brackets shall be positioned and spaced as follows:

(a) At stop ends.

(b) Between stop ends at intervals of not more than 1200 mm.

2.1.4 Internal box gutters. Internal box gutters are usually purpose-made, rectangular, and larger in size than eaves gutters, depending upon area of the roof catchment and number of downpipes. The guide to sizing (see Section 5) provides for overflow conditions.

Internal outlets shall be provided with sumps extending across the gutter width, and external outlets shall be provided with sumps and overflow weirs at lower levels than the gutter.

The minimum fall shall be 1 in 200. In gutters where

COPYRIGHT