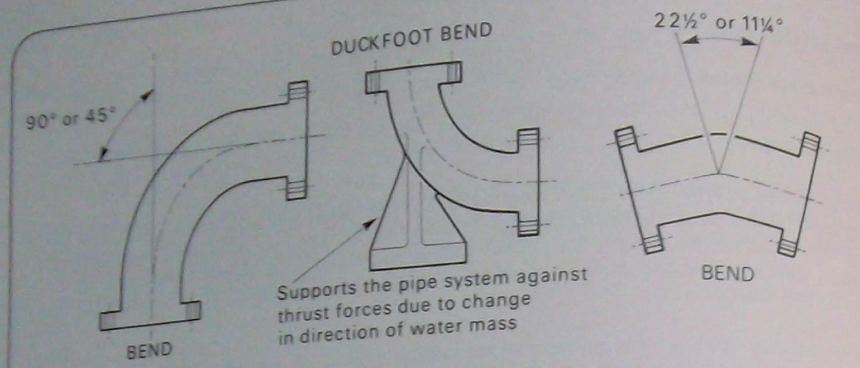

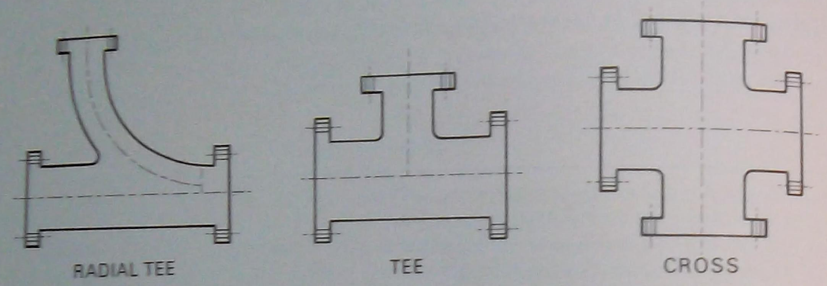

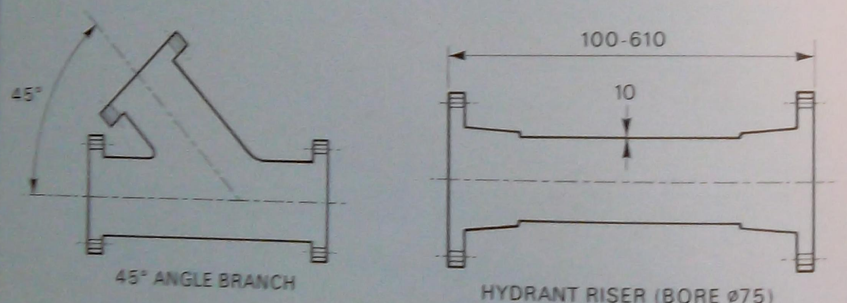

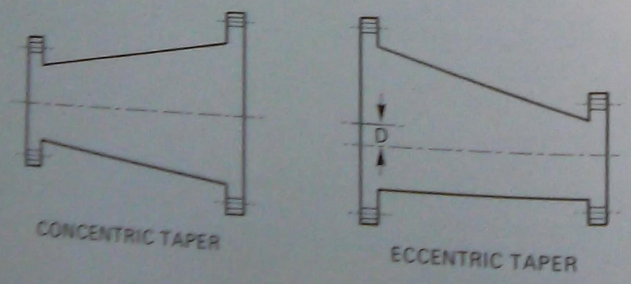

FLANGED CAST IRON FITTINGS

The rubber-sealed type

This type is cast by the same process as the flanged type, but the pipes have an integrally cast socket with specially shaped internal grooves at one end and a 30° chamfered spigot at the other. In classes and wall thickness, they match the flanged-type pipes except that the 75 mm bore one is not made. They are also available with cement mortar linings.

The advantages in using this type of pipe are the speed and ease of assembly which is much like that for RRJVC drain pipes and the flexibility of the pipe system which allows deflection of the rubber seal joints of 3° for large pipes to 5° for the smaller ones whilst remaining watertight at pressures of up to 3445 kPa.

These pipes are also suitable for the making of lead-caulked joints.

The range of fittings, such as bends, tees, tapers, risers and crosses is similar to that for the flanged product, except of course that the flanges have been replaced by sockets.

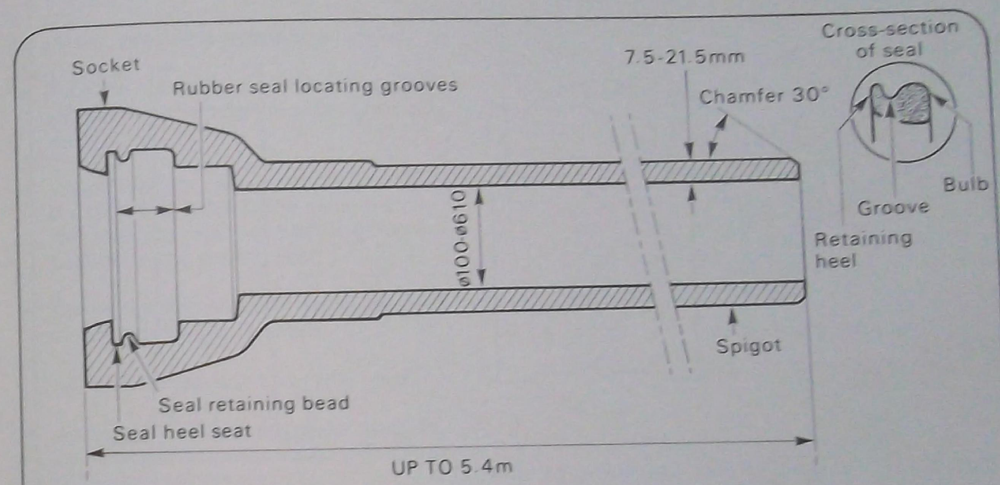

STRAIGHT CAST IRON PIPE FOR RUBBER-SEALED JOINT

For a range of suitable fittings see page 34.

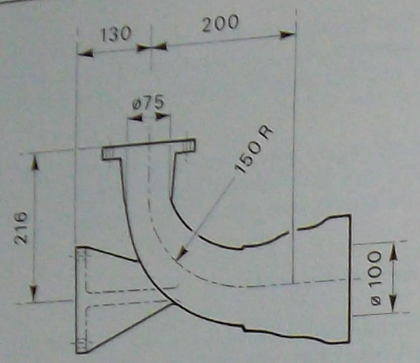

HYDRANT BEND

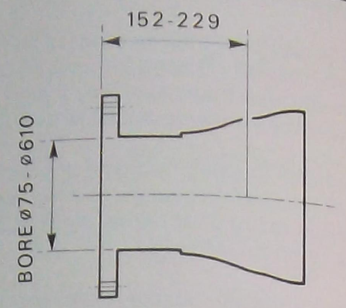

FLANGED SOCKET

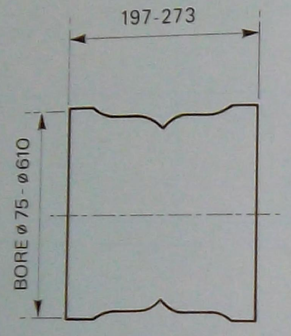

COLLAR

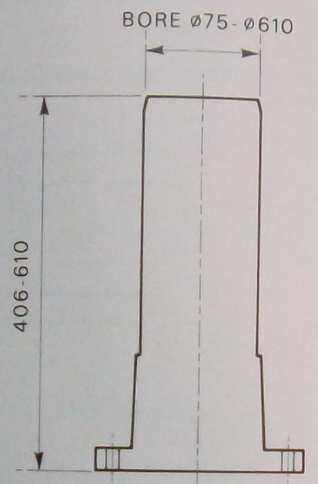

FLANGED SPIGOT

CUT-IN TEE For use with lead joint collars or GIBAULT joints to connect branches to existing pipelines.
The flanged branch can be a rubber ring joint socket.
The bore of the branch can be different to that of the pipe

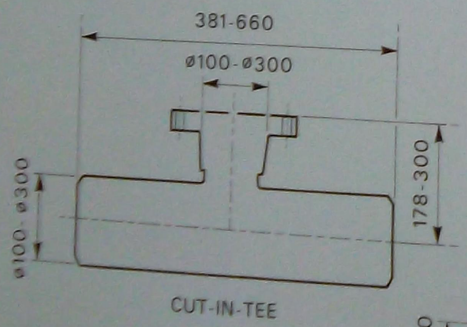

CUT-IN-TEE

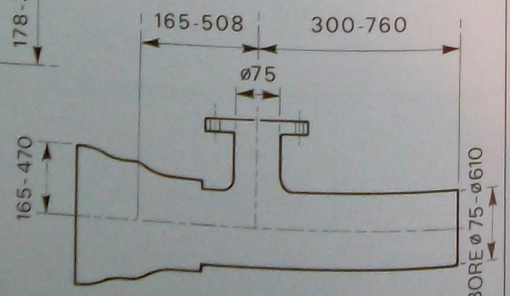

HYDRANT TEE

CAST IRON FITTINGS FOR RUBBER-SEAL JOINTS

Assembling the rubber joint

Before attempting to join the pipes, it is necessary to inspect the parts to be joined.

- Both spigot and socket interior should be thoroughly cleaned.
  - — Dirty surfaces may prevent a leak-proof joint.
- The spigot end should have a chamfer (30°) and be free from burrs or nicks which may damage the seal.
- The rubber seal must be clean and not damaged.

To assemble a joint, proceed as follows:

- Flex the seal and insert into the socket, the seal bulb facing towards the spigot end.
- Check that the seal groove is located on the retaining bead of the socket and that the seal retaining heel is firmly bedded in the socked seat.
- Check that the seal is fitted evenly around the circumference.
  - — Smooth out any bulges by hand.
- Apply a thin film of approved lubricant over the surface of the seal that will be in contact with the spigot.
  - — A thin film of the same lubricant can be applied also to the outer surface of the spigot to be fitted (keep it clean!) over a distance of 25 mm from the spigot end.
- Align the spigot squarely to the adjacent socket and carefully enter the spigot into the socket until it makes contact with the seal.
- Complete the assembly for forcing the spigot past the seal until the first reference stripe disappears inside the socket and the second stripe is about flush with the socket face.
  - — The methods of applying the necessary force to do this are explained overleaf.

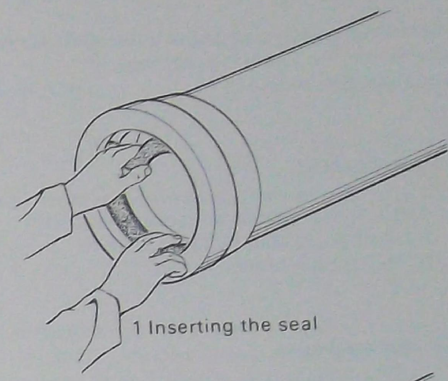

1 Inserting the seal

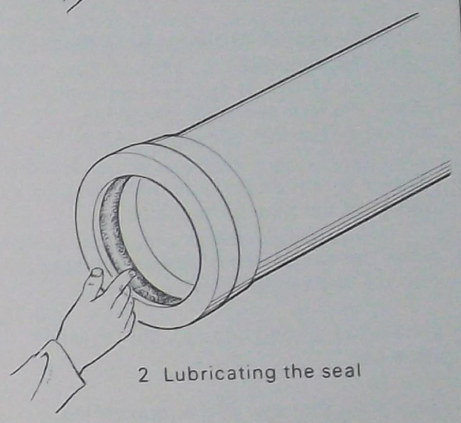

2 Lubricating the seal

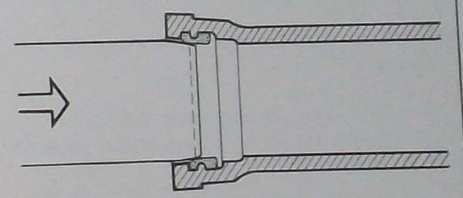

3 Aligning and inserting the spigot

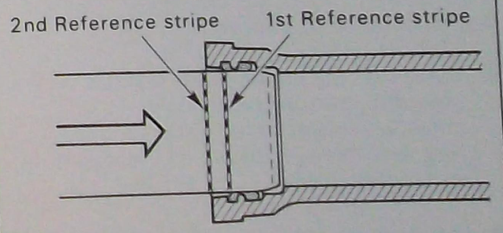

4 Completing the joint

RUBBER-SEAL JOINT ASSEMBLY

Assembly methods

Depending on the size of the pipes and conditions, the following methods of assembly can be used:

Crowbar method

- Apply force against the socket face with a crowbar or other suitable lever to push the pipe home.

Fork tool method

For joints to pipes 100 mm or 200 mm, a fork tool may be used.

- Place the fork over and behind the socket of the last laid pipe.
- Wrap a wire rope sling around the spigot of the pipe to be joined.
- Hook the eye of one of the sling ends into the sliding hook on the rope.
- Locate the sliding hook on the crown of the pipe.
- Hook the other eye of the rope on the hook of the fork lever, making sure that the rope end which is going to take the strain is looped behind the first layer of the rope wrapped around the spigot.
- Pull the fork handle in the direction shown.
  - — The pipe should enter the socket easily by using a reasonable amount of force.

Rack and lever method

(For pipes 200 mm and over)

- Place the rack on top of the last laid pipe with the adjustable hooks immediately behind the socket and the rack with its hook resting on the spigot of the other pipe.
- Place the socket sling under the pipe (last laid) and hook its eyes into the adjustable hooks.
- Tighten the nuts to clamp the tackle firmly behind the pipe socket.

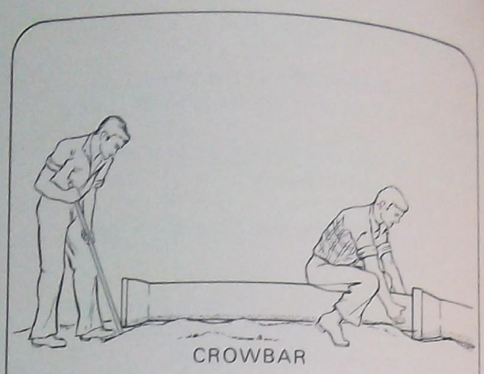

CROWBAR

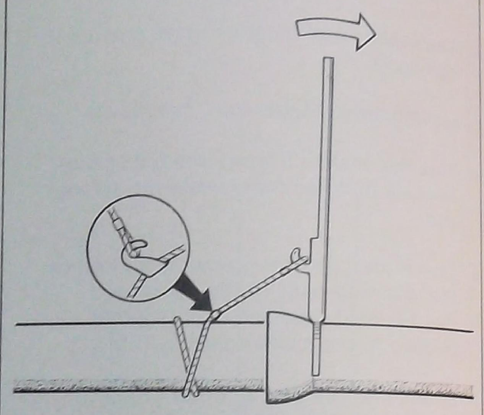

FORK TOOL

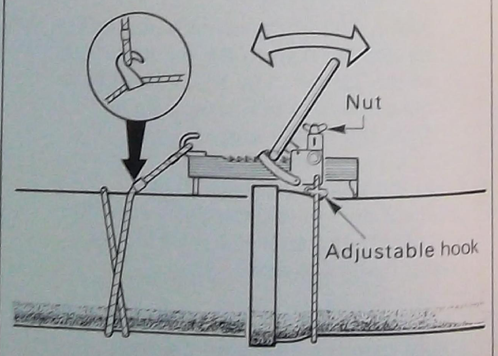

RACK AND LEVER

ASSEMBLY METHODS

- The other wire sling is mounted in the same way as for the fork.
- Draw the sling against the pull of the rack hook by sliding it away from the joint area.
- Operate the rack lever to draw the spigot into the socket.

NOTE:

Where a back hoe-type excavator is used for trenching, the machine may be used to push the pipe home.

4.5.4 Mild steel pipes

Very strong and flexible, these can be manufactured to almost any bore size and wall thickness. They can be mortar-cement lined also. For protection against corrosion, the exterior is either painted or wrapped in a variety of corrosion-proof materials. After derusting and cleaning, the exterior of the pipes is usually provided with a layer of glass fibre between the first and second coats of enamel paint that are applied. This is followed up with a wrapping of tar-impregnated asbestos felt and a coating of white wash or PVA as protection against high temperatures during storage.

Because of their greater elasticity and strength, they are well suited to above ground installations and traversing of fairly large gaps with the minimum of support.

The required fittings for a pipeline carried out in mild steel are usually prefabricated to the required size for the installation, the more commonly used being usually in stock.

NOTES

Types of joints

1. Flanged joint

   Suitable for temporary or permanent installations. Requires no special equipment (welding) for installation.

2. Butt joint with collar

   Suitable for permanent installation. Easily lined up. Pipes are joined in the field by welding the strap to the pipe ends which do not require special preparation.

3. Butt joint

   For high-pressure lines. Welded on the outside only on small size pipes. From 762 mm onwards, pipe can be welded both on inner and outer edges. Depending on wall thickness, edge preparation is square, single V or double V or U-form either flame-cut or machined.

4. Ball and socket joint

   Usually for pipes over 730 mm bore. Allows easy change of direction and easy alignment. Suitable for permanent installations where the welding of joints during assembly is possible.

5. Rubber-ring joint

   For use in underground installations. Fast laying rate, requires no special field equipment for jointing (such as welding). The joint is protectively wrapped and acts as a flexible as well as an expansion joint.

NOTE:

The mortar cement lining can be applied to all pipes. Depending on requirements, the mix can vary from 1:2 to 1:3 and the curing may be done with water or steam and the application of the lining carried out by hand or by machine centrifugally.

6. Spherical slip-in joint

   Suitable for permanent installations where the joints can be welded. Usual sizes: 120 mm — 1600 mm. Easily lined up and can take up slight changes in direction. Can be welded internally also on diameters of 914 mm and over; the mortar lining being applied at the joint afterwards to link up the lining of both pipes.

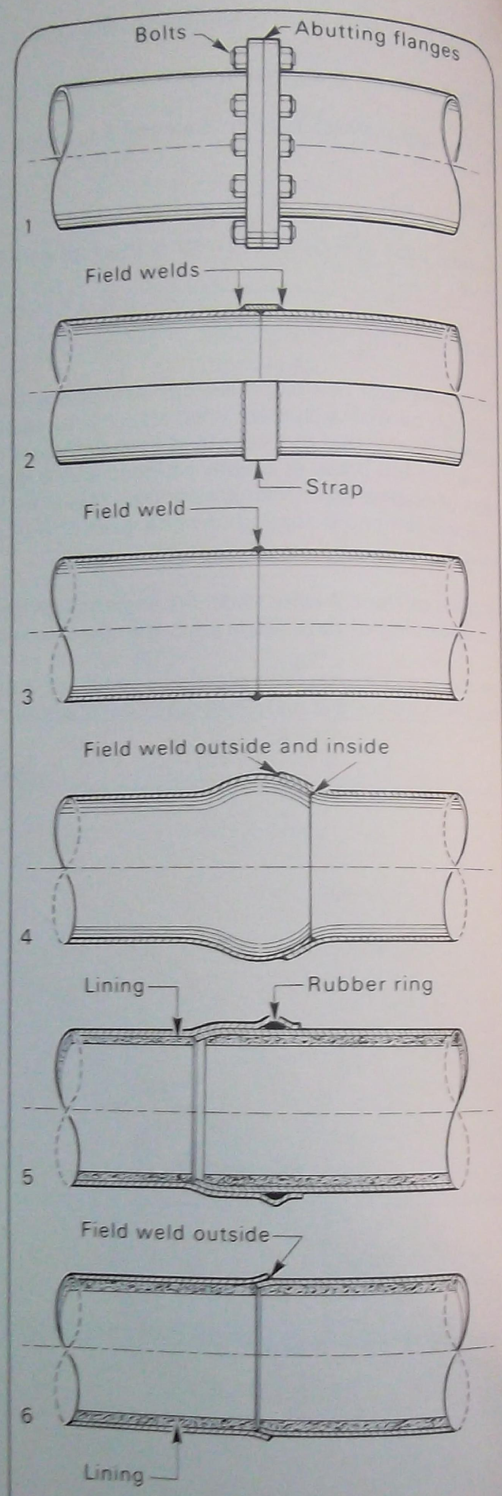

TYPES OF JOINTS
IN MILD STEEL PIPES

4.5.5 Reinforced concrete pipes

Reinforced concrete pipes are usually installed for culverts, for drainage or for water supply. Depending on the purpose of the pipe installation and the pressures to be encountered, various classes of pipes and jointing methods are used.

The pipes themselves are nowadays manufactured by a centrifugal spinning method.

The pipes used for water supply installations are referred to as 'pressure' pipes because they are designed to withstand higher pressures than would normally be experienced in sewerage or in drainage installations.

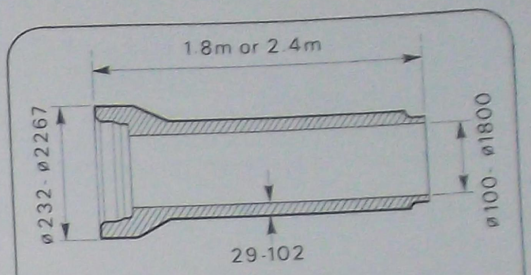

REINFORCED CONCRETE
PRESSURE PIPE

Like all pipes used in water supply installations, they are made to strict standards and pressure-tested during the manufacturing process. Standard sizes vary from 100 mm to 1800 mm and their lengths are normally 1.8 m for sizes up to 225 mm and 2.4 m for 300 mm pipes and above.

Reinforced concrete pressure pipes are made with a socket at one end and a spigot at the other and both are designed to accommodate a rubber ring (usually of natural rubber for water supply) to make the joint watertight. Assembly is done in a similar way as for all rubber-ring joints. Because of the higher pressures to be handled by the pipe installation, the rubber-ring joint is different from the one used for sewer installations which are designed to cope with pressures of up to 90 kPa only. The test pressures applied to pressure pipes (and depending on wall thickness ordered) vary from between 300 kPa to 1350 kPa.

For complete installations, the necessary fittings are available or they can be manufactured as required for any specific installation.

Minor cracks in an installation done in reinforced concrete are sometimes 'self-healing' in the presence of water. Major ones can be repaired by welding the reinforcing rods, should they have broken, and sealing off the cracked portion with epoxy compounds.

The laying of concrete pipes with rubber joints is similar to the ones explained already, except that earth excavating machines should not be used for pushing or homing as this could fracture pipes.

NOTES

The illustrations show the difference between the 'sewer' rolling ring joint and the 'pressure' joints used with reinforced concrete pressure pipes.

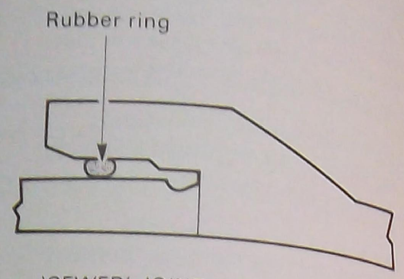

'SEWER' JOINT (ROLLING RING)

In assembling the rolling ring joint, the ring is placed on the locating groove at the end of the spigot and upon entry, the ring rolls over the spigot end until it rests against the spigot shoulder which supports it against dislodgement.

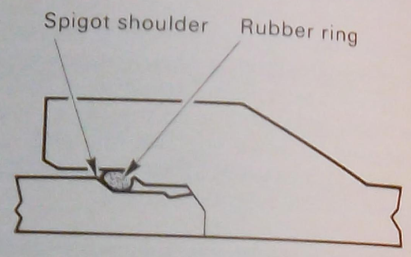

ROLLING RING PRESSURE JOINT

A new development in ring sealing is the 'skid-ring joint'. The ring is placed on the groove provided for it at the end of the spigot where it is supported against dislodgement by a shoulder. During assembly, the ring does not roll but remains in its groove. For easy assembly, and to prevent excessive ring distortion, both ring and socket are lubricated. It is usual to make skid-ring joints on pipes larger than 1800 mm, although some pipes of smaller diameter are available for assembly in this way.

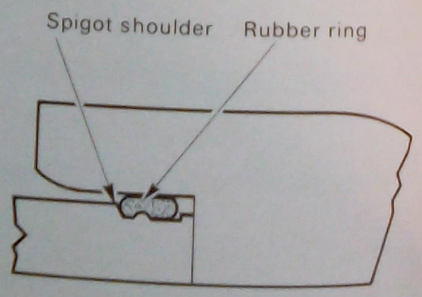

SKID-RING JOINT

RUBBER-RING JOINTS
IN REINFORCED CONCRETE PIPES

4.5.6 Asbestos cement pipes

AC pressure pipes are manufactured from asbestos fibres, cement and silica. The mixture of these three, with water added to make it into a slurry, is fed into a pipe-making machine, the bore being taken up by a mandrel. The slurry is gradually built up in layers on the slowly rotating mandrel while the layers are being compressed by pressure rollers. When the required wall thickness has been obtained, the mandrel is withdrawn and the pipe passed through a hardening chamber. When hard enough, it is passed into an autoclave where it is subjected to high-pressure wet steam of 170°C.

When properly 'cured', the pipe ends are machined to the dimensions required for proper jointing in installations.

AC pressure pipes are manufactured in six classes: A to F. The corresponding working pressures are 300 kPa to 1800 kPa. The pipes and couplings are each tested in the factory to between two and three times the recommended working pressure, i.e. 900 kPa to 5400 kPa, depending on size and class.

The standard pipe length is 4 m but, up to 10% of any order may be supplied in shorter lengths down to 3.4 m in 150 mm decrements. This practice eliminates wastage at the factory caused by cutting testing samples from pipes as these pipes can be trimmed to the shorter length and used. It is not normal to order lengths shorter than standard. The diameters range from 58 mm through to as large as 600 mm and with special pipe, from 675 mm diameter to 750 mm diameter.

NOTE:

The sizes referred to are nominal only. Internal diameters as well as outside diameters vary depending on the class of pipe. The OD's are usually made so as to match other pipe systems made with different materials so that interchange of fittings is possible between various materials, e.g. spigot-ended valves. Consult manufacturers' catalogues to gain information on the range and type of fittings available.

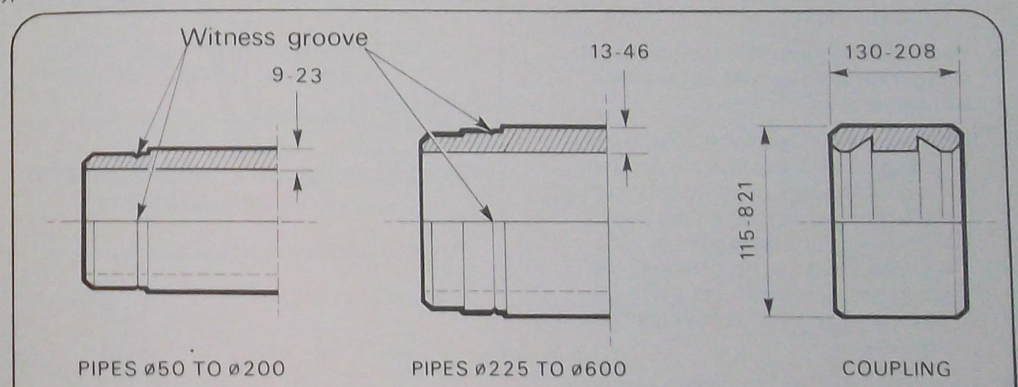

PIPES ø50 TO ø200 PIPES ø225 TO ø600 COUPLING

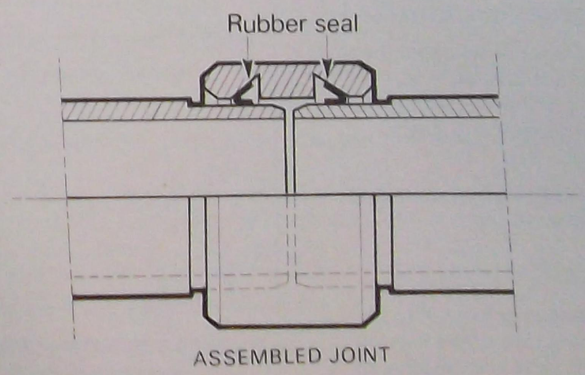

ASSEMBLED JOINT

AC PIPE SPIGOTS AND COUPLING

Assembling the pipes

During laying operations, it is more convenient to fit a socket to one end of the pipe before it is lowered into the trench for jointing to the pipe already laid (with the socket in place). To pre-socket a pipe, proceed as follows:

- Check that the coupling is clean and place the special V-shaped rings, as shown (Sharp end of taper outwards).
- Lift the end of the pipe clear of the ground, clean it and support it with a wooden block, if necessary.
- With a brush, apply jointing lubricant to the spigot end as far as the witness groove.
  - The spigot end must be chamfered after a pipe has been cut with approved cutters to ensure easy entry and to prevent seal damage.
  - The lubricant is virtually a soft-soap solution. Do not use oil or grease as this will deteriorate the natural rubber rings.
- Push the coupling onto the spigot with a slight twisting motion as far as the witness groove.
  - For pipes 200 mm and over, support the pipe on a wooden block. After lubricating the spigot and having placed the coupling on the end of the pipe, place a wooden block across the coupling and push the coupling home with the aid of the bar to apply force to the block (see illustration).
- Lower the pipe into the trench and finish the assembly as shown; by hand for pipes under 200 mm and by bar and lifting device for pipes over 200 mm.
  - The force should not be applied to the coupling in this case. The wooden block is inserted in the open end of the pipe and bears against the pipe end.
- Check that the witness grooves line up with the coupling ends.

NOTE:

Pipes must be in line during assembly of the joints. After jointing, the pipes may be slightly deflected to enable the pipeline to follow curves without affecting the seals. Manufacturers' installation data list the permissible deflections for each size of pipe.

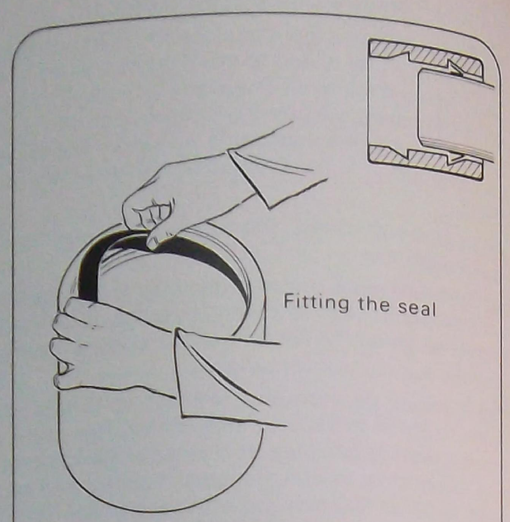

PIPE ASSEMBLY

Where pipes up to 200 mm have not been pre-socketed before laying, coupling retaining forks can be used to secure freshly jointed couplings against backward movement when the next pipe is inserted.

The fork, easily made locally of steel bar or tubing, is held behind the coupling, as shown. The distance between prongs should be 15 mm wider than the outside diameter of the pipe it straddles.

The forks are not needed on pipes over 200 mm because these have been provided with a collar (stop) to prevent coupling movement during assembly.

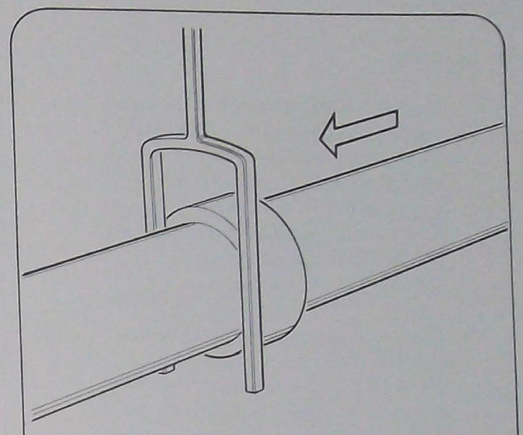

COUPLING RETAINING FORK

Cutting of pipes

AC pipes can be cut to a required length by using:

- a bushman's saw or a power hacksaw blade;
- a manually operated chain-roller cutter, as shown in 'Sanitary Plumbing 2' for pipes of up to 150 mm in size;
- a hydraulically operated version of the chain-roller cutter for larger sizes;
  - There is no rotation of the wheels or the chain. The pipe cuts around the circumference by the so-called 'snap-pop' principle.
- a high-speed abrasive wheel pipe cutter.

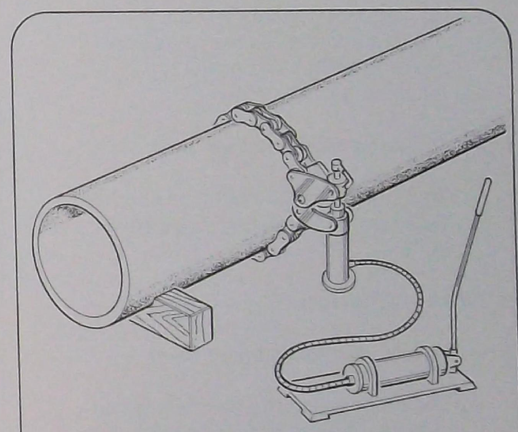

HYDRAULIC PIPE CUTTER

  - If this wheel is used, all cutting should be done wet to eliminate dust problems.

Pipe ends must be squared and trimmed to ensure proper jointing and a neat job. If pipe ends are to be inserted into couplings, the ends must be chamfered with a rasp (up to 200 mm size).

Larger pipe ends are machined to proper spigot size with a hand-operated field lathe or with one that can be powered electrically or by compressed air.

Field lathes

Basically, these consist of the following components:

- An arbor:
  - One threaded end supports three feet (or fingers) set at 120 degrees and by turning the arbor, the feet, inserted into the bore of the pipe, expand and firmly locking themselves against the inside wall of the pipe, locate the arbor centrally in the bore.
  - The arbor is also provided with another threaded portion outside of the pipe bore. This accommodates the turning frame hub, which when locked on, provides the automatic feed for external machining of the pipe.
- A turning frame.
  - This accommodates the blade holders and the blades to perform either the trimming or the machining of the pipes.
- An operating handle (or handles).
  - This provides the means to operate these portable manually operated lathes.
- Two blade holders.
  - One holds the trimming blade.
  - The other holds the machining and bevelling blades and is pre-drilled to accommodate the blades for the various lengths of machining required on the different pipe sizes.
  - The holders adjust for diameter size of pipe through the turning of a threaded shaft in the turning frame and are locked in position by means of a locking screw.

Machining operations

The lathes are supplied with manufacturers' instructions for their proper operation. Depending on the size of pipe to be machined, either one of the two types of blade holders must be used with the blades located as shown in the Table and in the illustrations for blade holders.

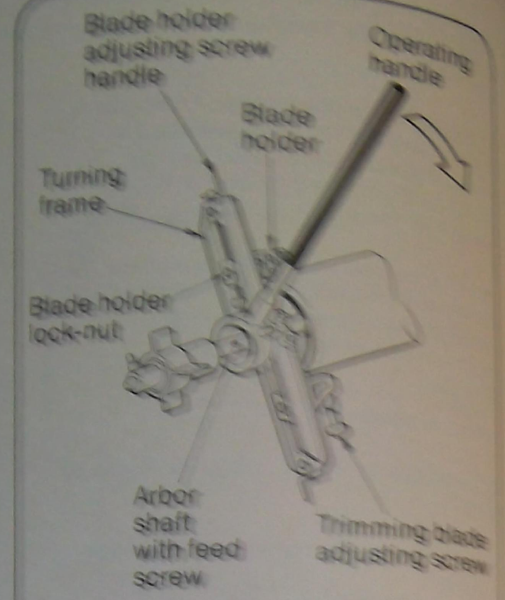

HAND-OPERATED FIELD LATHE

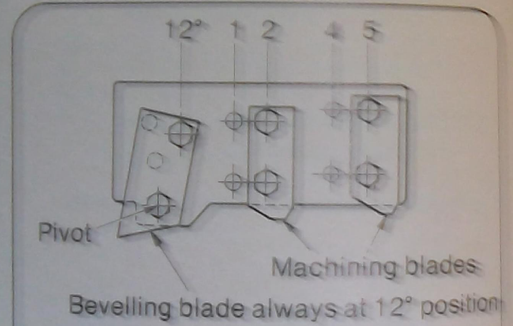

TOOL HOLDERS

BLADE POSITIONS IN TOOL HOLDERS

Nominal Pipe Dia	Model B toolholder Tool position	Model C toolholder Tool position
100	1,1	—
150	1,1	—
200	1,1	1,1
225	2,2 & 5,5	2,2 & 5,5
250	2,2 & 5,5	2,2 & 5,5
300	2,2 & 5,5	2,2 & 5,5
375	—	2,2 & 6,6
450	—	2,2 & 6,6
525	—	2,2 & 6,6
600	Use Special Tool Holder	

Preliminaries

- With the proper pipe cutter, cut the pipe approximately 25 mm longer than the finished dimension required.
- Select a pipe which is not out of round by more than 4 mm.
  - Check with calipers.
- Clamp the selected pipe in position on a pipe stand and mark the trim line.
- Install the lathe as per instructions in the manufacturer's manual.

To trim a pipe end:

- Install the lathe so that the face of the knurled bearing of the finger assembly lines up with the line of the proposed trimming.
- Disengage the automatic feed screw.
- Adjust the trimming blade holder by turning the blade holder adjusting screw handle until the holder is about 12 mm from the face of the pipe.
  - Make sure the blade holder lock-nut is loosened when doing this and the trimming blade fully retracted.
- Lock the blade holder against the turning frame by means of the lock-nut (or screw).
- Lower the trimming blade by means of its adjusting screw until it is firmly in contact with the pipe surface.
- Check the alignment of the blade with the trimming line.
- Holding the turning frame against the screw feed assembly on the arbor, rotate the frame to start the groove.

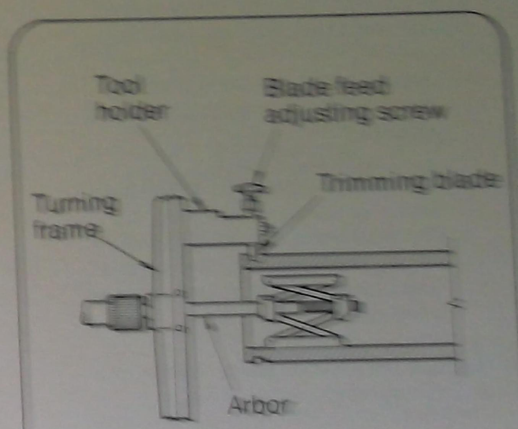

TRIMMING PIPE END

- Adjust the trimming blade feed about 1/8 of a turn per revolution of the frame.
  - — Feed-in the trimming blade only while rotating the frame.
  - — Once a groove is formed, there is no need to hold the turning frame against the screw feed assembly.
  - — If the groove 'loads up', keep rotating the frame, without feeding the blade, until the excess dust has been cleared.
- Continue rotation and trimming blade advance until the cut has been completed.
- Remove the section cut-off, tapping carefully with a hammer if necessary.

To machine the external surface:

- Select the appropriate blade holder for the size of pipe to be machined and fit the blades in their appropriate locations (See Table page 45 and Toolholder illustration).
- Secure the blade holder in the toolholder.
- Check that the screw feed assembly is locked into the arbor shaft.
- Slacken off the collet nut — push clockwise on flanges.
- Slide the turning frame towards the pipe end until the advance blade is level with the trimmed off pipe end.
- Turn the toolholder adjusting screw until this blade is positioned to make a light cut from the pipe surface, then tighten the toolholder lock-nut.
  - — Before adjusting the toolholder, make sure the locking bolt (or nut) is loose.
  - — For manual operation, it may be easier to machine with only the advance blade first, and take a second cut later with the second blade, fitted after the first cut has been made.
- Engage the feed screw by pulling the collet nut flange anticlockwise.
- Rotate frame until about 12 mm have been machined (about 9 revolutions).
- With calipers, check the diameter made and, if necessary, adjust the position of the blade holder.
- Continue turning until the end of the shoulder has been reached.
  - — If only one blade was used, it is necessary to repeat the process with the second blade in position.
  - — To retract the frame, disengage the feed screw and rotate the frame IN THE SAME direction as for the first machining cut while withdrawing the frame.

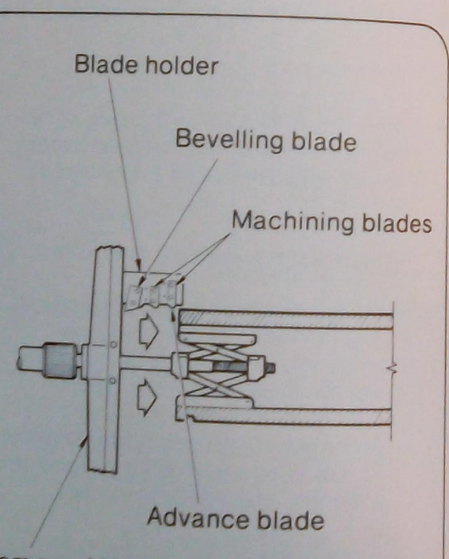

MACHINING PIPE SPIGOT SURFACE

- Machine a chamfer on the end of the pipe end with the bevelling blade after adjusting the toolholder for this operation.
  - — Chamfers are 9 mm long for pipes 100 to 300 mm and 15 mm for pipes from 375 to 600 mm diameter.
- Disengage the screw feed and retract the turning frame carefully as before.
  - — Before machining the bevel edge, it may be advisable to make one final clean-up machining pass, without altering the blade's setting, to remove the spiral toolmarks that could have been formed on the surface while retracting the turning frame.
- Check the final diameter and size of bevel before finally removing the lathe.

The Gibault joint

This joint can be used to join two plain pipe ends together, repair longitudinal fractures in pipes or for the installation of plain-ended fittings which may have to be removed for maintenance purposes, such as valves.

The Gibault joint consists of:

- A sleeve (usually cast iron)
- Two flanges (cast iron)
- Two rubber rings
- The necessary nuts and bolts

To make a Gibault joint:

- Place a flange and a rubber ring on each end of the pipes to be joined, as shown.
- Slide the sleeve over the end of one pipe.
- Move the other pipe or fitting into the free sleeve end, leaving about 6 mm clearance between pipe ends for expansion.
- Adjust the sleeve centrally over the pipe ends.
- Draw the flanges and rubber rings up to the sleeve.
- Insert the bolts and nuts, then gradually and evenly tighten the nuts so compressing the rubber rings against the cast iron sleeve and pipe spigot to make a watertight joint.

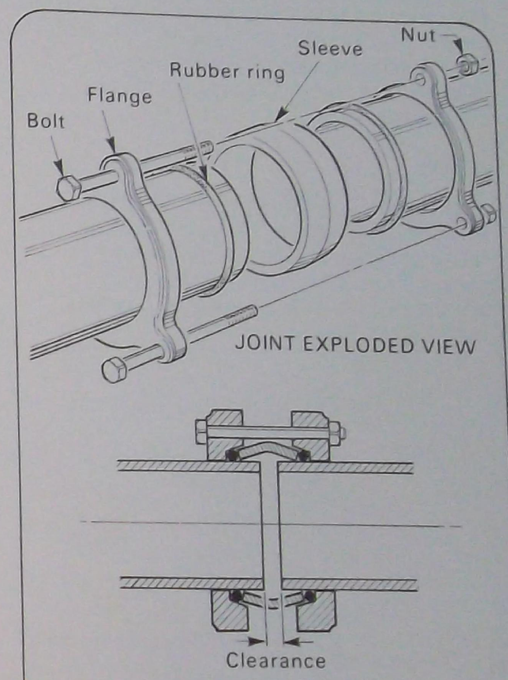

THE GIBAULT JOINT

Repairing a longitudinal fracture

Where a break is too long to be repaired by a DNR joint (see below for radial fractures), repairs can be carried out as follows:

- Using the appropriate cutting tools, cut out the damaged section of pipe at 75 mm beyond the ends of the fracture.
- Cut a suitable length of replacement pipe, making allowances for clearances, and remove sharp edges.
- Assemble the appropriate size Gibault joint over each cut.

Repairing a radial fracture

So-called DNR joints can be used for the repair or radial fractures. The joints are supplied in various widths to suit the length of fracture to be repaired. The illustrations are self-explanatory for the sequence of operations required to carry out the repair.

NOTE:

The DNR joint is being phased out in favour of the multi-fit joint (MFJ) which operates safely at higher pressures. Similar in principle to DNR it requires jointing lubricant on the sealing ring-pipe interface.

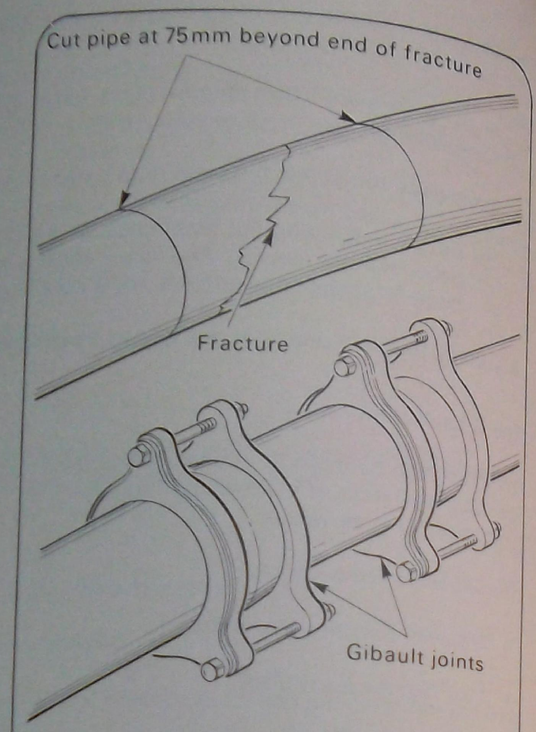

LONGITUDINAL FRACTURE REPAIR

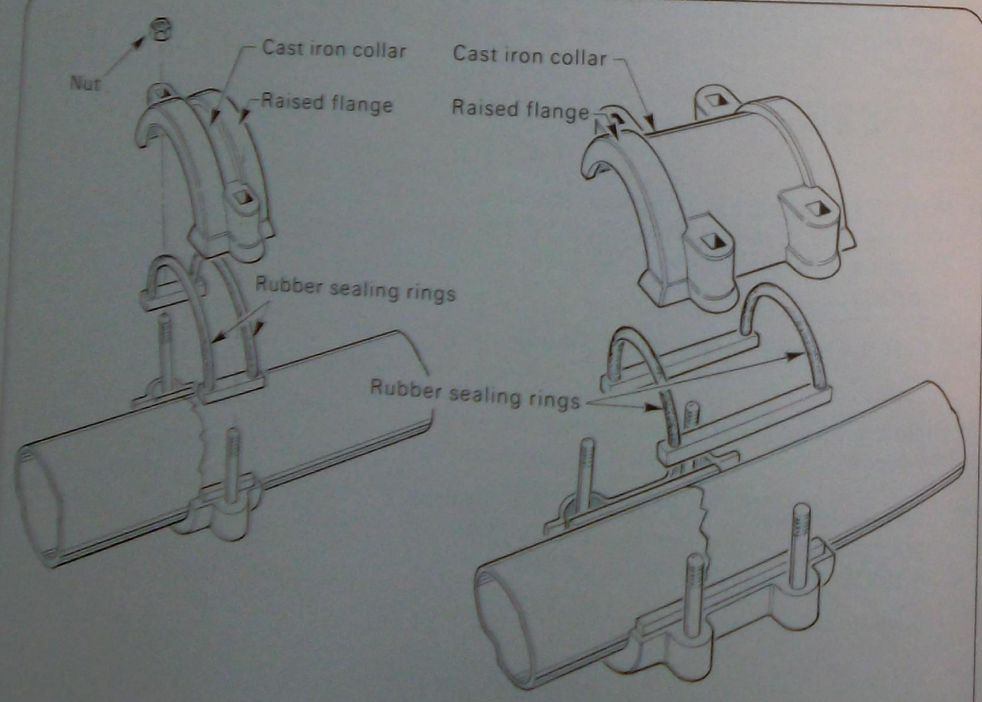

D N R JOINTS

Multi-fit joints (MFJ)

Multi-fit joints consist of two castings which seal to either asbestos cement or cast iron pipelines by means of two moulded rubber seals which seat into longitudinal and circumferential grooves in each casting. Cup head bolts key into the castings to facilitate clamping of the castings together to form a watertight seal.

Each casting is provided with a tapping boss for fitting of an off take.

Multi-fit joints with either 80 mm or 100 mm flanged branches to Table 5 of AS 1488-1974 are available in sizes 100 A-F to 200 A-D.

Multi-fit joints have been specifically designed to fit cast iron pipes having outside diameters in accordance with AS 1723-1975, and asbestos cement pipes with outside diameters in accordance with AS 1711-1975.

Types of fittings used with AC water-mains are generaly made from cast iron, e.g. bends, tees, valves, etc, as shown in Section 4.5.3.

NOTES

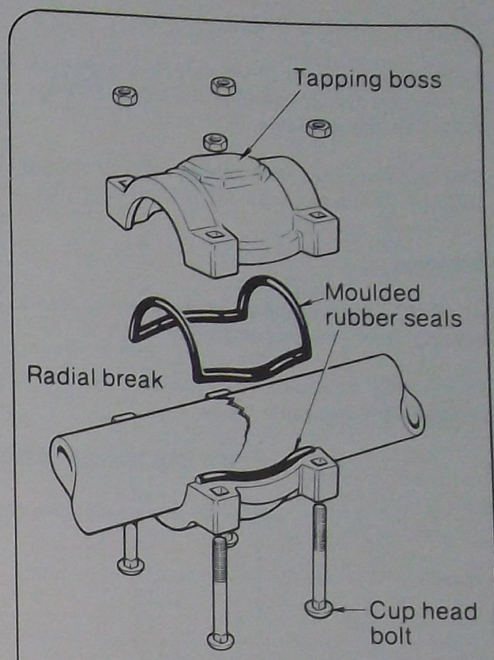

STANDARD JOINT

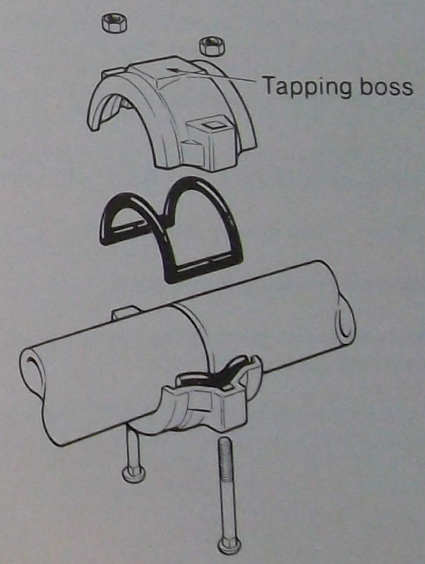

SHORT JOINT

MULTI-FIT JOINTS

4.5.7 UPVC Pressure pipe

Rubber-ring jointed UPVC pipes are also used in water supply installations. The pipes are socketed at one end and spigoted at the other. Fittings and seals for use with existing installations in other materials are available.

The sizes of pipes with rubber-ring jointing, range from 50, 65, 80, 90, 100, 125 mm (nominal) right through to 195 mm (see AS 1477-1973 for the full range).

Branding

All UPVC pressure pipes are repetitively branded in accordance with AS 1477-1973 to indicate the nominal diameter and classification.

As a further means of classification, the information is printed in different colours, allocated to classes as in the table below.

PIPE CLASSIFICATION	PRINT COLOUR
4.5	Black
6	Red
9	Blue
12	Green
15	Brown
18	Yellow

The figures in the left-hand column refer to the pipe capacity to withstand at pressure of 10 metres water head for each unit shown. Thus:

Class 6 can stand: 6 x 10 = 60 metres head.
Class 10 can stand: 18 x 10 = 180 metres head.

There are three classes in rubber-ring joints: 6, 9 and 12.

UPVC pressure pipes joined by the solvent-welded process and used for other purposes than for water supply, range in size from 15 to 115 mm.

Of these, there are six classes: 4.5, 6, 9, 12, 15, 18.

Maximum operating temperature

Pressure ratings given in the following table for the various classes of UPVC tube apply only at a service temperature of 20°C.

At service temperature above 20°C, the maximum allowable working pressure is reduced with the increase in temperature. A pressure derating chart is given.

Pipe class	Nominal diameter range (mm)	Recommended max. working pressure @ 20°C (MPa)	Approximate Max. working head (m)
Solvent welded			
4.5	80-195	0.45	45
6	40-195	0.6	60
9	25-195	0.9	90
12	20-195	1.2	120
15	15-115	1.5	150
18	15-195	1.8	180
Rubber-ring joint			
6	50-195	0.6	60
9	50-195	0.9	90
12	50-195	1.2	120

TEMPERATURE DERATING CHART

Pipe material temperature (°C)	Maximum allowable pressure (MPa)					
	Class 4.5	Class 6	Class 9	Class 12	Class 15	Class 18
20	0.45	0.60	0.90	1.20	1.50	1.80
30	0.36	0.48	0.72	0.96	1.20	1.40
40	0.27	0.36	0.54	0.72	0.90	1.08
50	0.18	0.24	0.36	0.48	0.60	0.72
60	0.09	0.12	0.18	0.24	0.30	0.36

There are various types of plastic pressure pipe systems available. Each of these systems includes the normal range of fittings. A series of adaptors is also available to enable combination with pipes and fixtures of other materials. Plastic pipes have several important characteristics:

- They are much lighter than other pipes, being only 20% of the weight of a galvanised pipe of equal capacity.
- They do not conduct electricity and are thus not corroded by electrolysis.
- They are easy to handle and to join.
- Smooth internal surfaces reduce friction to a minimum.

Plastic pipes are more affected by exposure to changes in temperature than pipes of other materials. An increase in temperature of the pipe material by 10°C may cause a 30 m pipe to increase in length by 25 mm. If the pipes are subjected to uneven heating, for example being half in shade and half in hot sunlight, they may distort, causing difficulty in forming well-sealed joints. During storage and installation, care should be taken to:

- Stack pipes parallel to each other and in the shade.
- Stack them not more than 7 layers deep.
- Support the pipes at 1 metre centres on bearers about 75 mm wide.

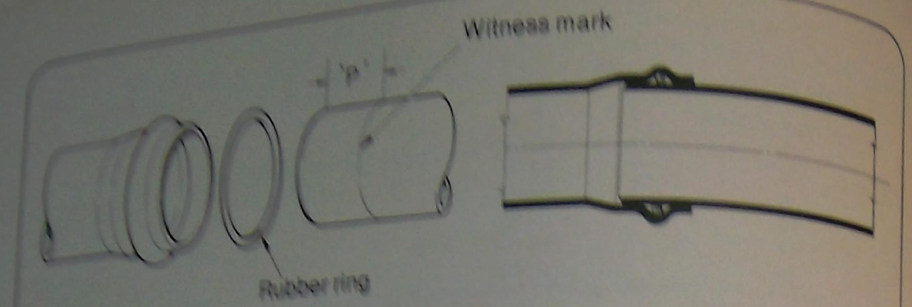

UPVC RUBBER RING JOINT

TABLE OF RUBBER-RING JOINTING PIPES DETAILS

Nominal Diameter of Pipe (mm)	'p' Max. (mm)	Mean Outside Diameter (mm)	Class 6 60 m head (0.6 MPa) Mean Inside Diameter (mm)	Class 6 60 m head (0.6 MPa) Mean Wall Thickness (mm)	Class 6 60 m head (0.6 MPa) Approx. Mass (kg/100 m)	Class 9 90 m head (0.9 MPa) Mean Inside Diameter (mm)	Class 9 90 m head (0.9 MPa) Mean Wall Thickness (mm)	Class 9 90 m head (0.9 MPa) Approx. Mass (kg/100 m)	Class 12 120 m head (1.2 MPa) Mean Inside Diameter (mm)	Class 12 120 m head (1.2 MPa) Mean Wall Thickness (mm)	Class 12 120 m head (1.2 MPa) Approx. Mass (kg/100 m)
50	55	60.3	56.7	1.8	49	55.1	2.6	70	53.7	3.3	89
80	101	88.9	83.7	2.6	105	81.3	3.8	151	79.1	4.9	195
100	110	114.3	107.9	3.2	170	104.7	4.8	250	101.7	6.3	321
150	125	168.3	151.3	4.5	333	146.9	6.7	489	142.7	8.8	633
225	156	219.1	206.7	6.2	626	200.9	9.1	905	195.3	11.9	1192

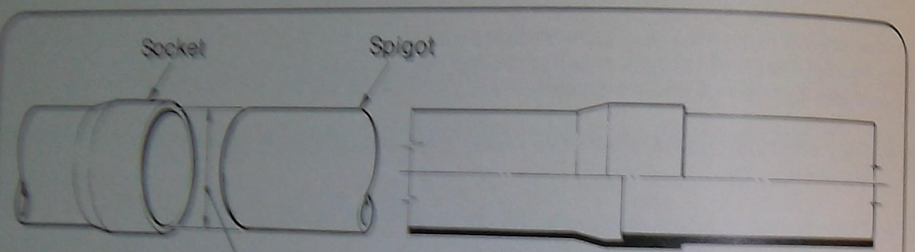

UPVC SOLVENT-WELDED JOINT

TABLES OF SOLVENT-WELDED PIPES DETAILS

Nominal Diameter of Pipe (mm)	Mean Outside Diameter (mm)	Class 4.5 45 m head (0.45 MPa) Mean Inside Diameter (mm)	Class 4.5 45 m head (0.45 MPa) Mean Wall Thickness (mm)	Class 4.5 45 m head (0.45 MPa) Approx. Mass (kg/100 m)	Class 6 60 m head (0.6 MPa) Mean Inside Diameter (mm)	Class 6 60 m head (0.6 MPa) Mean Wall Thickness (mm)	Class 6 60 m head (0.6 MPa) Approx. Mass (kg/100 m)	Class 9 90 m head (0.9 MPa) Mean Inside Diameter (mm)	Class 9 90 m head (0.9 MPa) Mean Wall Thickness (mm)	Class 9 90 m head (0.9 MPa) Approx. Mass (kg/100 m)
15	21.3	—	—	—	—	—	—	—	—	—
20	26.7	—	—	—	—	—	—	—	—	—
25	33.5	—	—	—	—	—	—	—	—	—
32	42.2	—	—	—	—	—	—	30.5	1.5	23
40	48.2	—	—	—	45.2	1.5	33	38.4	1.9	35
50	60.3	—	—	—	56.7	1.8	49	44.0	2.1	45
80	88.9	84.9	2.0	81	83.7	2.6	104	55.1	2.6	69
100	114.3	109.3	2.5	130	107.9	3.2	168	81.3	3.8	150
150	160.3	153.4	3.4	253	151.3	4.5	328	104.7	4.8	247
175	200.3	191.7	4.3	396	189.0	5.6	517	146.9	6.7	482
195	219.1	209.7	4.7	474	206.7	6.2	621	183.5	8.8	758
225	250.4	239.8	5.3	613	236.4	7.0	803	200.9	9.1	904

Nominal Diameter of Pipe (mm)	Mean Outside Diameter (mm)	Class 12 120 m head (1.2 MPa) Mean Inside Diameter (mm)	Class 12 120 m head (1.2 MPa) Mean Wall Thickness (mm)	Class 12 120 m head (1.2 MPa) Approx. Mass (kg/100 m)	Class 15 150 m head (1.5 MPa) Mean Inside Diameter (mm)	Class 15 150 m head (1.5 MPa) Mean Wall Thickness (mm)	Class 15 150 m head (1.5 MPa) Approx. Mass (kg/100 m)	Class 18 180 m head (1.8 MPa) Mean Inside Diameter (mm)	Class 18 180 m head (1.8 MPa) Mean Wall Thickness (mm)	Class 18 180 m head (1.8 MPa) Approx. Mass (kg/100 m)
15	21.3	—	—	—	18.3	1.5	14	17.7	1.8	16
20	26.7	23.7	1.5	18	22.9	1.9	22	22.3	2.2	25
25	33.5	29.7	1.9	28	28.9	2.3	33	28.1	2.7	39
32	42.2	37.4	2.4	44	36.4	2.9	53	35.4	3.4	62
40	48.2	42.8	2.7	57	41.6	3.3	69	40.4	3.9	80
50	60.3	53.7	3.3	88	52.1	4.1	107	50.5	4.9	127
80	88.9	79.1	4.9	193	76.7	6.1	234	74.7	7.1	271
100	114.3	101.7	6.3	317	98.9	7.7	385	96.1	9.1	449
150	160.3	142.7	8.8	624	138.7	10.8	756	134.7	12.8	875
175	200.3	178.3	10.9	971	173.4	13.5	1178	168.4	15.9	1369
195	219.1	195.3	11.9	1136	189.5	14.8	1412	184.3	17.4	1644

NOTES

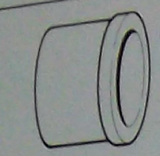

REDUCING BUSH

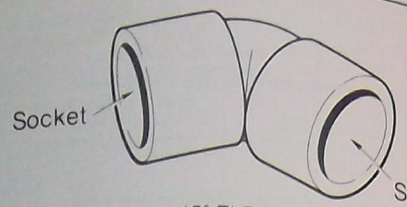

45° ELBOW

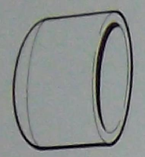

CAP

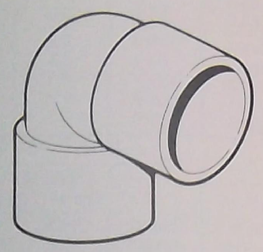

90° ELBOW

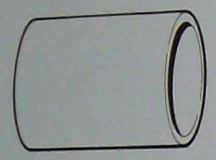

COUPLING

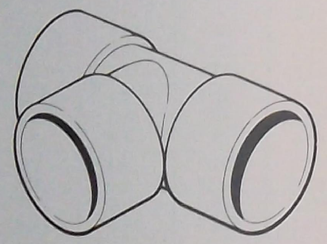

TEE

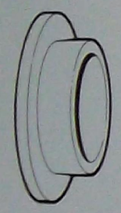

FLANGE

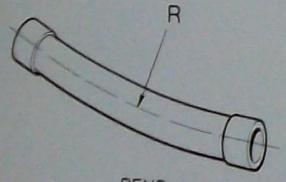

BEND

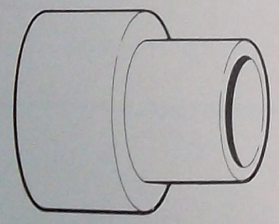

REDUCING COUPLING

FITTINGS USED ON UPVC SOLVENT-WELDED MAINS

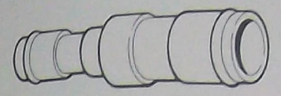

REDUCER

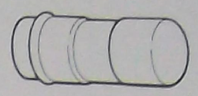

END CAP

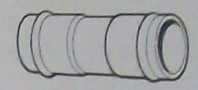

STANDARD COUPLING

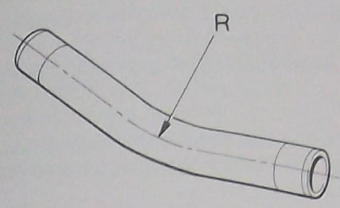

BEND

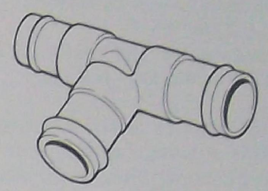

TEE

FITTINGS USED ON RUBBER RING JOINTED UPVC WATER MAINS

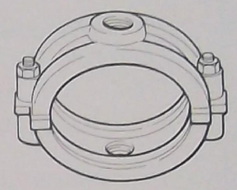

DOUBLE TAP

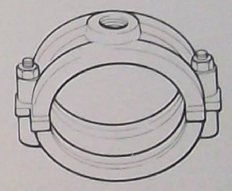

SINGLE TAP

DNR TAPPING BANDS FOR UPVC PRESSURE PIPES

4.5.8 Securing the mains

When the mains are under pressure, considerable thrust is set up, especially where there are directional changes or fittings, such as valves, in the installation. Thrust blocks, usually of concrete (mix: 1:2:5), are installed at critical locations and elsewhere as required to prevent movement of the pipework.

Location of thrust blocks is required:

- at all bends or junctions;
- at the termination of pipework;
- at valves installed in the pipework;
- at a change in diameter of the main;
- in areas of unstable soil conditions.

The thrust blocks transfer the load from the fittings to a wider load-bearing area on the undisturbed faces of the trench walls.

It is generally the practice to install these blocks after the line has been partly back-filled and consolidated. This ensures that the pipes in the vicinity of the fittings are adequately restrained and that neither pipes nor fittings can move away from the thrust blocks.

Installation

Thrust blocks should bear firmly against the side of the trench. It may therefore be necessary to trim the side of the trench or to excavate a recess into the trench wall by hand. Should it be necessary to install the thrust blocks as construction progresses, soil should be tamped down around and over the pipe up to the crown surface for at least one pipe length away from the fitting.

NOTES

The thrust acts through the centre line of the fitting and therefore the thrust block should be constructed symmetrically about this centre line.

Thrust blocks should be constructed of a 1:2:5 concrete mix and 7 days allowed for the concrete to set before testing.

The concrete is mixed, placed fairly dry and carefully tamped around the fitting, making it easy to shape the block to a wedge shape with its widest part against the solid undisturbed trench wall. Blocks usually require some concrete forming construction at the sides to achieve the proper bearing area with a minimum of concrete.

When a cast iron fitting is used to change the direction of the pipeline in the vertical plane, the concrete thrust block should be designed so that its weight is greater than the thrust in the fitting. The fitting should be anchored to the block, using steel straps or rods.

NOTE:

On some fittings, the thrust-absorbing means are part of the fitting, e.g. duck-foot bend.

4.5.9 Typical irrigation set-out

Even on irrigation lines, which are normally classed as private mains in a non-public situation, e.g. market garden, nursery, etc., thrust blocks to prevent movement must be installed.

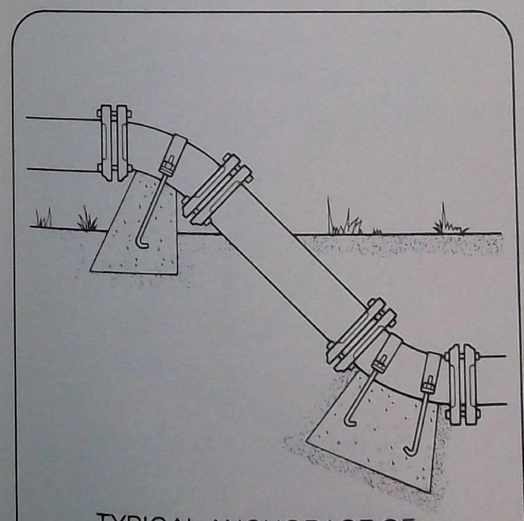

TYPICAL ANCHORAGE OF A VERTICAL BEND

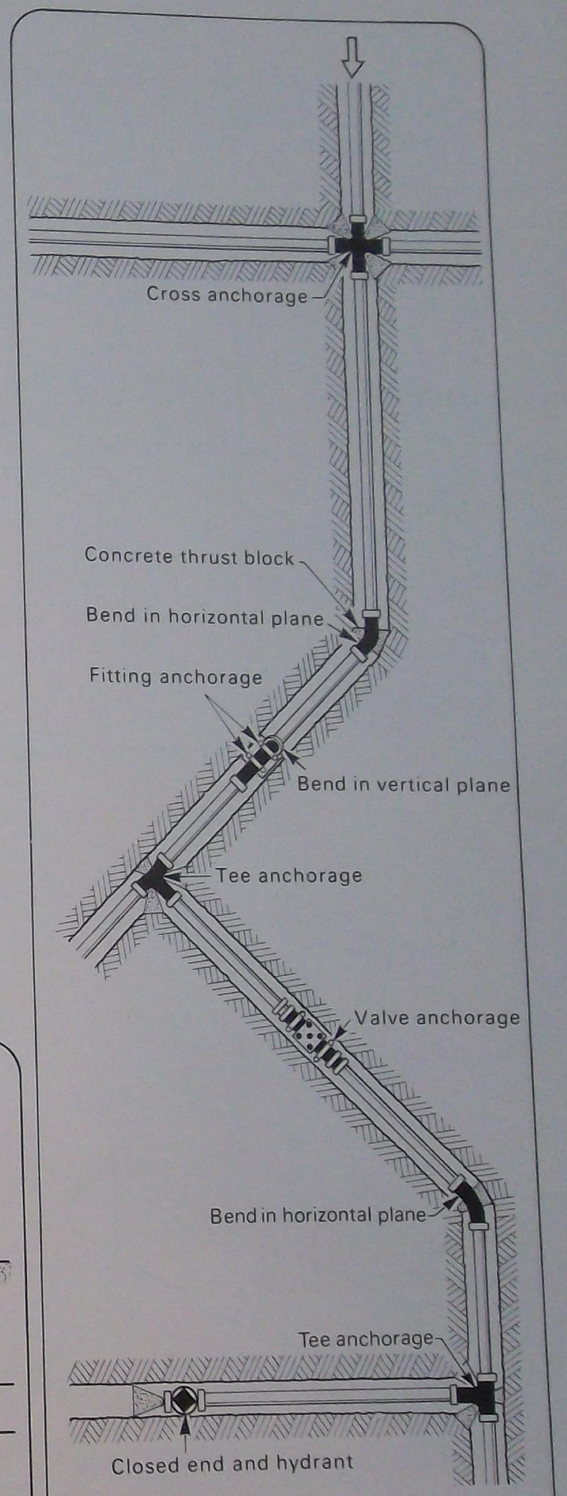

TYPICAL THRUST BLOCK INSTALLATION

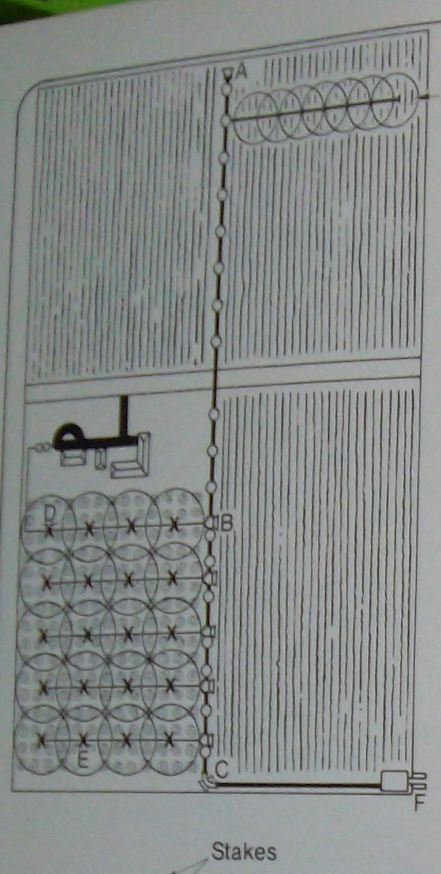

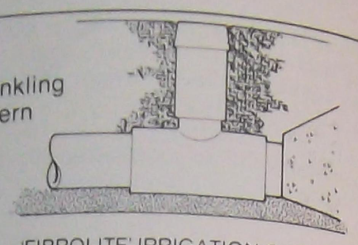

'FIBROLITE' IRRIGATION OUTLET

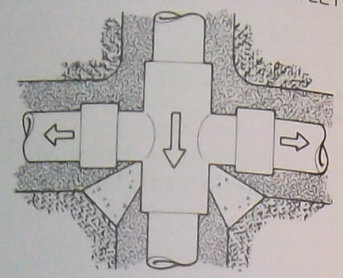

'FIBROLITE' CROSS

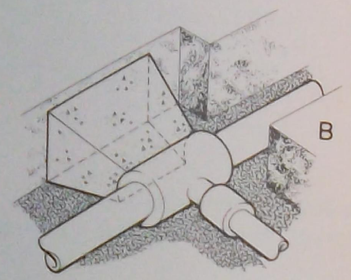

'FIBROLITE' TEE

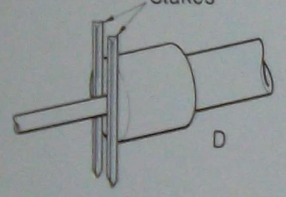

'FIBROLITE' CLOSED COUPLING TAPPED

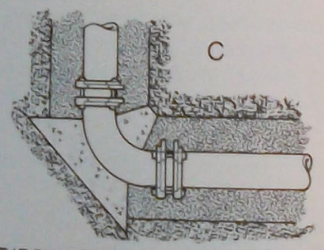

CAST IRON BEND IN HORIZONTAL PLANE

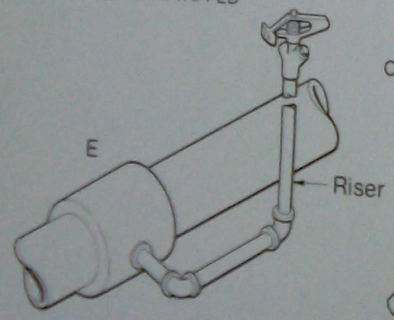

'FIBROLITE' TAPPED COUPLING SHOWING A TYPICAL IRRIGATION RISER

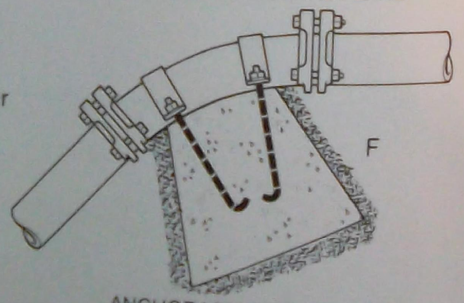

ANCHORAGE OF CAST IRON BEND IN VERTICAL PLANE

TYPICAL IRRIGATION INSTALLATION SHOWING LOCATION AND DETAILS OF ANCHOR BLOCKS

4.5.10 The sluice and the gate valve

These are installed in the pipeline to control the flow of water. They are not meant to act as throttling devices to regulate the volume of water flowing through the pipes. They are either fully open, their straight bore allowing unrestricted water flow, or fully closed, cutting off the water supply to the downstream portion of the pipeline.

Gate valves are produced in many sizes suitable for insertion into the pipeline system. They are either flanged, socket or spigot-ended to match the features of the mains jointing system used. Smaller valves, as illustrated, have screwed ends to match smaller size pressure installations. The larger valves do not usually feature a handwheel when placed underground, but the spindle end is squared off to accommodate a long T-shaped key. This spindle end is housed in a cast iron cover and accessible by lifting the cover lid. By turning the spindle by handwheel or key, the gate fitted to the threaded part is moved upwards to open the valve or downwards to close it, depending on which way the spindle is rotated. Directions for closing or opening the valve are usually cast on the handwheel. Large, key-operated valves usually require an anticlockwise rotation of the spindle for closing and a clockwise one for opening, but this depends on the pattern or design preferred or approved for installation by the Supply Authorities.

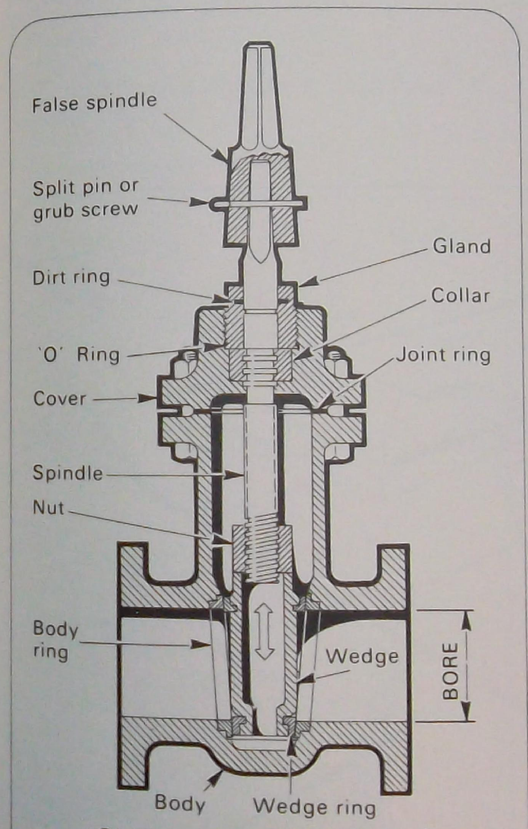

SLUICE VALVE (CLOSED)

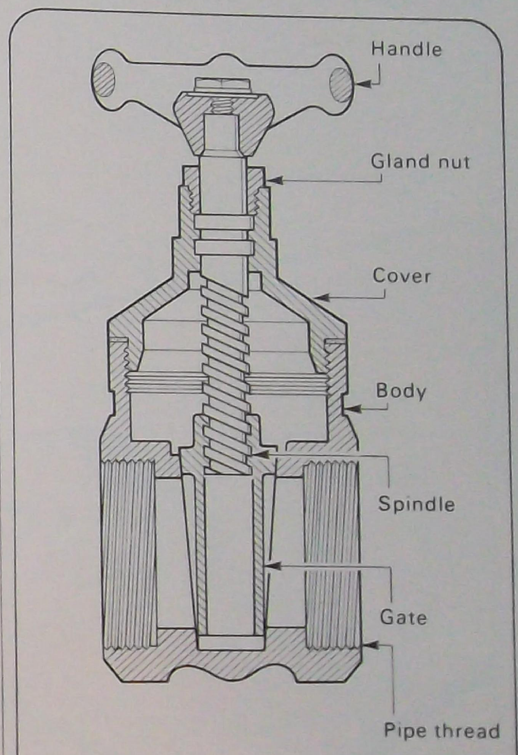

GATE VALVE

NOTE:

All British valve standards call for clockwise closing unless specifically ordered to the contrary.

5 WATER SERVICES

A separate service pipe which taps into the Water Supply Authority's mains is usually provided for each property to be supplied.

The diameter of the service pipe is in relation to the requirements of the user.

The supply authorities normally supply tables which indicate:

- Maximum number of pipes that may be tapped into the local mains and trunk services.
- The maximum size of such service pipes for each type of property.

5.1 TRUNK SERVICES

Circumstances, particularly in outlying areas, may make it necessary to connect a pipe of larger diameter than the usual service pipe size to accommodate local requirements. Such lines tapped into the mains to service an area are called: 'Trunk service lines' or 'Trunk service' or 'Joint service'.

The service pipes for each individual property are then tapped into this in the same way as the service pipe is tapped into a main.

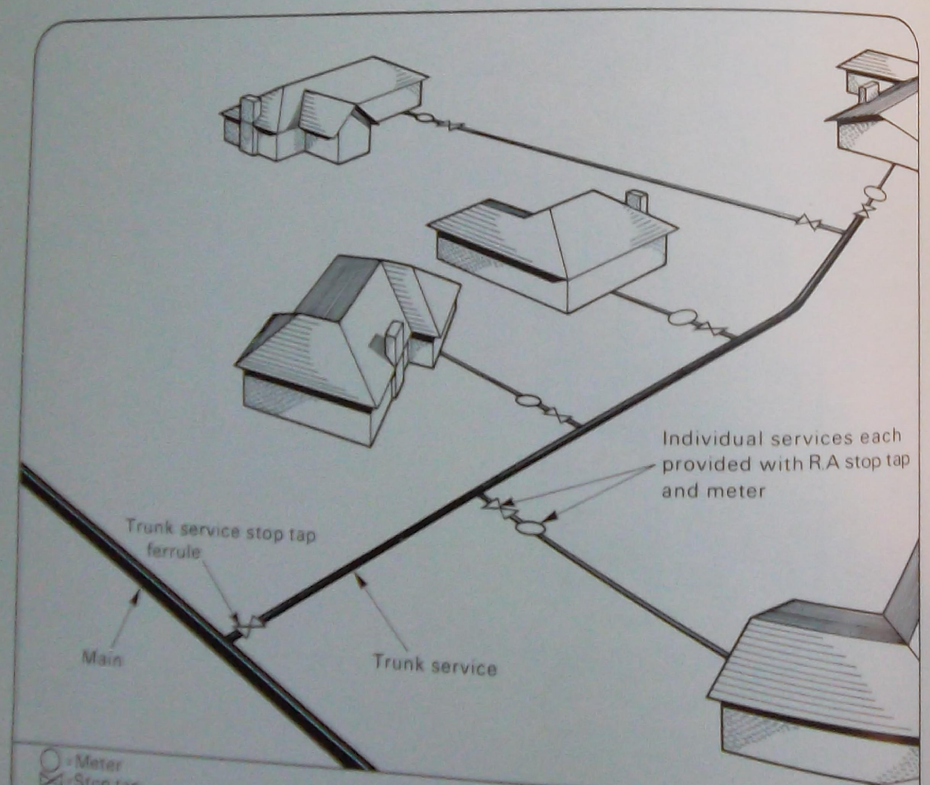

TRUNK SERVICE

5.2 CONNECTION OF SERVICES TO THE MAIN

The connection between the main and the service pipe is made by fitting a stop tap assembly (called a ferrule) into the main. The service pipe is then fitted to the outlet of the ferrule. The ferrule contains a screw-down stop valve and has a male tapered BSP thread at its lower end for connecting it to the main. At the top of the spindle is a square cap piece which enables the valve to be opened or closed with a wrench or a key. The outlet at the side of the ferrule is provided with a union nut for attachment of the service pipe. The ferrule is usually fitted on the main, directly in front of the property to be serviced.

Ferrules may be fixed to cast iron mains by:

- Screwing directly into a BSP threaded hole in the main.
- Screwing into a wrought iron clip fixed around the main.
- A breeching connection.

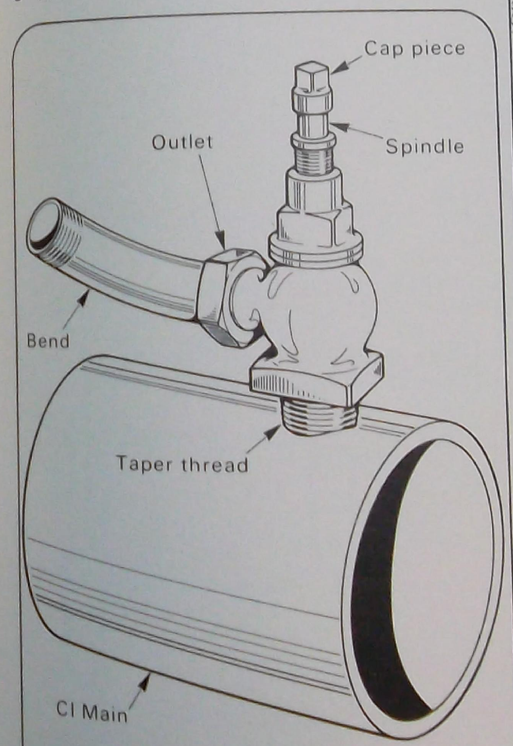

STOP TAP FERRULE

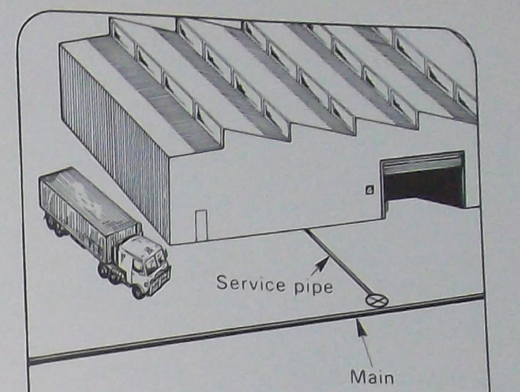

INDUSTRIAL USE

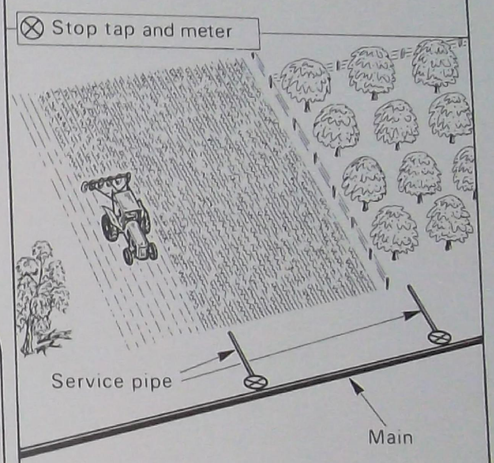

AGRICULTURAL/IRRIGATION USE

USE OF LARGE SERVICE PIPE

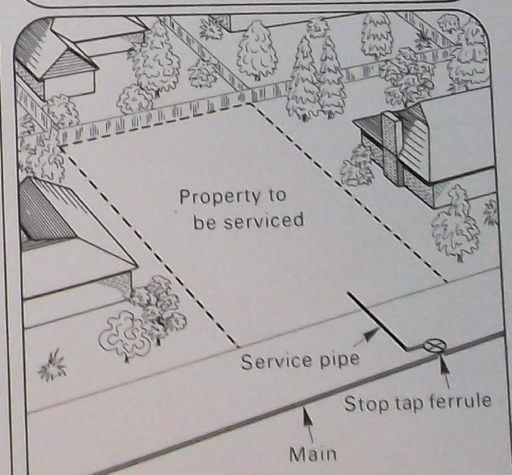

LOCATION OF FERRULE

5.2.1 Use of the cast iron saddle

A cast iron saddle may be used when the size of the hole required would weaken the main or produce a weak joint if the ferrule were screwed directly into the main.

The saddle is placed so that the ferrule is directly over a hole drilled in the main and the top half of the saddle is bedded on the main with a rubber sealing washer.

Most Water Supply Authorities have tables detailing the maximum size of hole which may be used without the saddle support.

The recommended maximum diameter tapping that is permitted for each diameter of water-mains is as per table below:

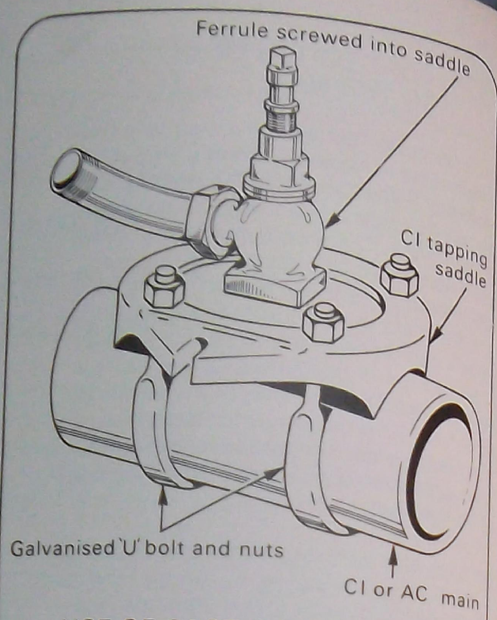

USE OF CAST IRON SADDLE

DIAMETER OF WATER-MAIN (mm)	WITHOUT TAPPING SADDLE. CAST IRON WATER-MAINS ONLY (mm)	WITH TAPPING SADDLE (mm)
80	20	40
100	20	40
125	25	40
150	25	65
175	25	65
200	32	65
225	40	65
Over 225	50	—

5.2.2 Breeching connection

A breeching connection is sometimes used to connect a large diameter service pipe or trunk to a main. Two ferrules are used. The ferrules are connected to the service pipe by annealed copper pipes, as a Y-piece or a Tee-piece. The use of two ferrules allows a greater volume of water into the service pipe.

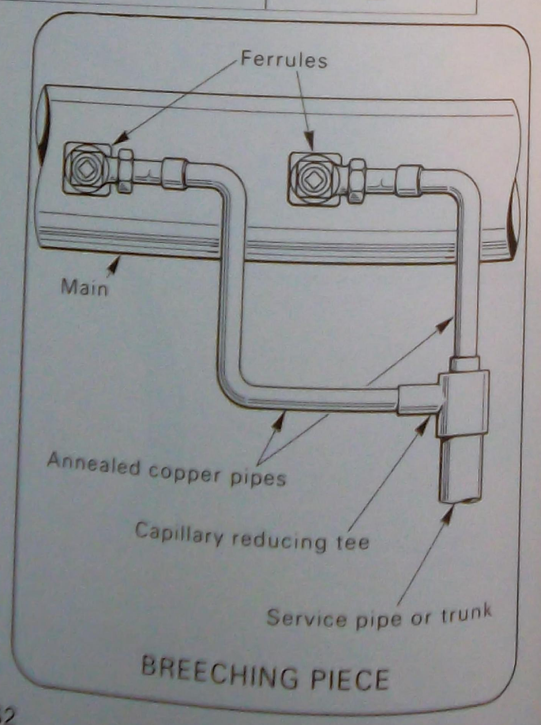

BREECHING PIECE

5.2.3 Fixing ferrules into AC, concrete or plastic mains

Ferrules may be fitted to AC, concrete or plastic mains by tapping saddles. A tapping saddle or band is drilled and threaded to accept a ferrule. It is clamped to the main so that the ferrule is directly over a hole drilled in the main. Sealing material is placed between the saddle and the main. Concrete mains pipes sometimes have brass ferrules cast in situ during manufacture.

The tapping band, used for connection of the ferrule, consists of two sections of cast iron curved to fit snugly to the outside diameter of the main. The two sections are clamped together by galvanised iron bolts and nuts. The top section is drilled and tapped to accept the threaded ferrule end. The seal, between band and drilled hole in the main, is made by compressing a rubber ring between main and tapping band.

Tapping bands should not be located closer than 150 mm from the end of a closed-off AC pipe. The maximum allowable tapping sizes for each normal size of AC pipe are tabulated below.

NOMINAL PIPE DIAMETER (mm)	MAXIMUM TAPPING SIZE (inch BSP)
50 & 58	1 (25 mm)
80	1 (25 mm)
100	1½ (38 mm)
150	1½ (38 mm)
200	2 (50 mm)

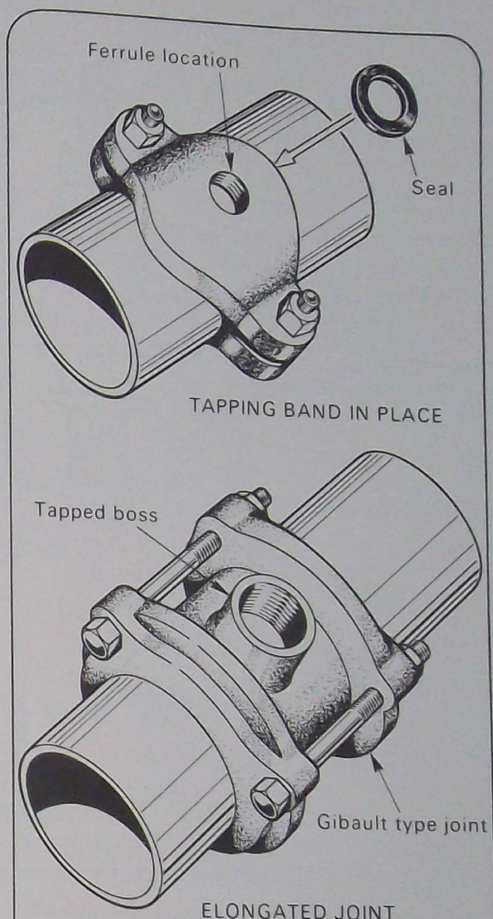

TYPES OF TAPPING BANDS FOR AC PIPES

NOTE:

Tapping bands should not be used where the water head in the line may at any time exceed 140 metres (equivalent pressure = 1400 kPa).

In lines where the pressure exceeds 1400 kPa and a larger delivery through the service pipe is required compared to what would normally be available by fitting a tapping band, elongated joints may be installed.

The elongated joint, as shown, is somewhat similar to a Gibault joint, except that its sleeve has been elongated to allow space for the tapped BSP boss.

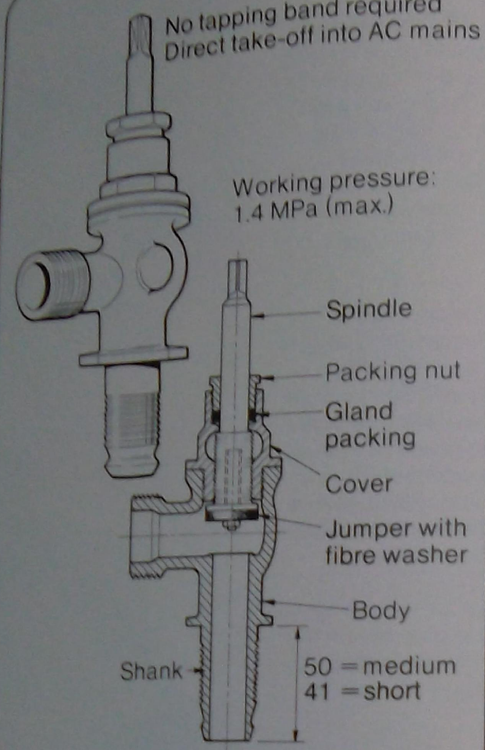

WITH JUMPER VALVE
BARBER HAYS FERRULE

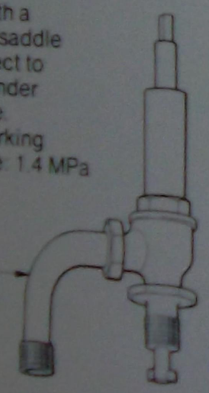

SELF-INSERTING MAINS FERRULE

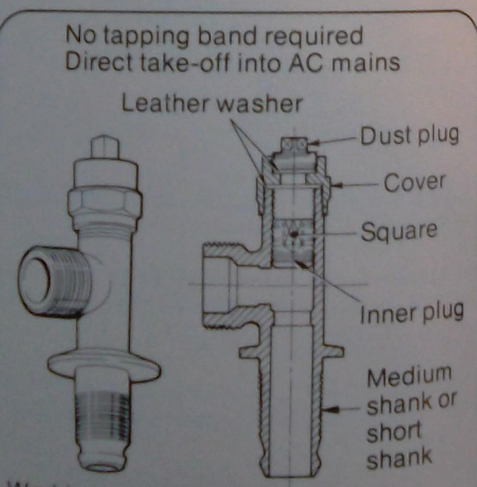

Working pressure: 1.4 MPa (max.)
STANDARD
(WITHOUT JUMPER VALVE)

BARBER HAYS FERRULE

Ferrules are also available with an expanding brass nipple formed on the lower end. A special key is used to expand the lower portion which grips a hole drilled in the wall of the main.

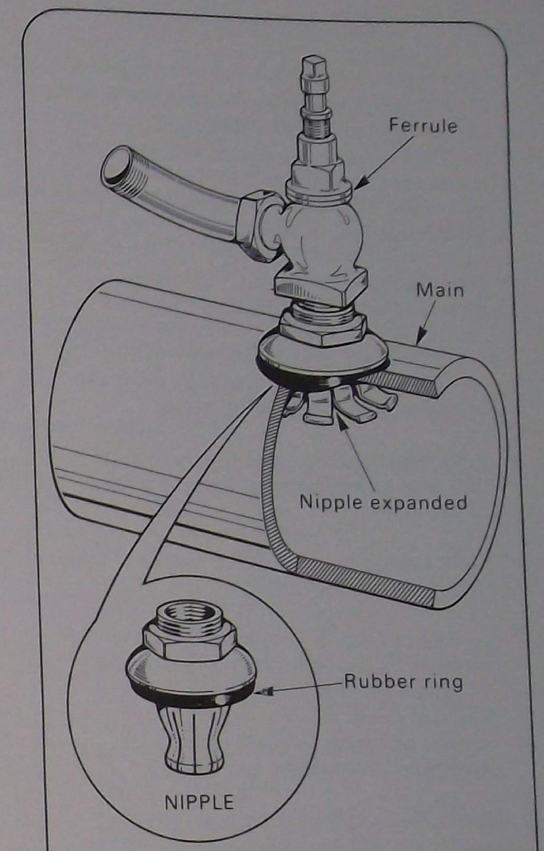

NIPPLE-MOUNTED FERRULE

5.3 TAPPING THE MAIN

The action of drilling and tapping a hole in a main to fit a ferrule is called: 'tapping the main'. This may be carried out by a plumber or by an employee of the water authority. Before commencing the work, permission must be obtained from the Water Supply Authority to tap the main and from the local Council to open the road.

Two techniques may be used for tapping the main:

- With the water in the main shut off.
- Without shutting off the water in the main.

5.3.1 Tapping with the water shut off

The ground around the main is opened and the tools for tapping are assembled on the main. They consist of a frame, secured by a chain passed around the main and held by a captive nut on a clamping screw. The tapping procedure is as follows:

- Assemble a drill tap into the lever-operated ratchet mounted within the frame.
  - — The drill tap is held against the main by a ratchet tightening screw.
- Adjust the tapping tools to position the drill tap vertically above the centre line of the main.
- Start tapping by turning the ratchet lever to rotate the tap.
  - — The drill tap is held firmly to the main by continuously tightening the ratchet screw.
- Continue tapping until the main is pierced and the thread well started.
- Dismantle the frame from the main, leaving the drill tap in position.
- Engage a long key with the drill tap and continue tapping until the correct depth of thread has been reached.

NOTE:

With small diameter mains, care must be taken to ensure that the tap does not cut into the opposite side of the main.

- When the thread has been cut to a sufficient depth, remove the tap.
- Prepare the thread of a ferrule with hemp or thread-sealing tape.
- Screw the ferrule tightly into the main until the outlet faces in the right direction.
- Turn on the water in the main and examine the ferrule connection for water leaks.

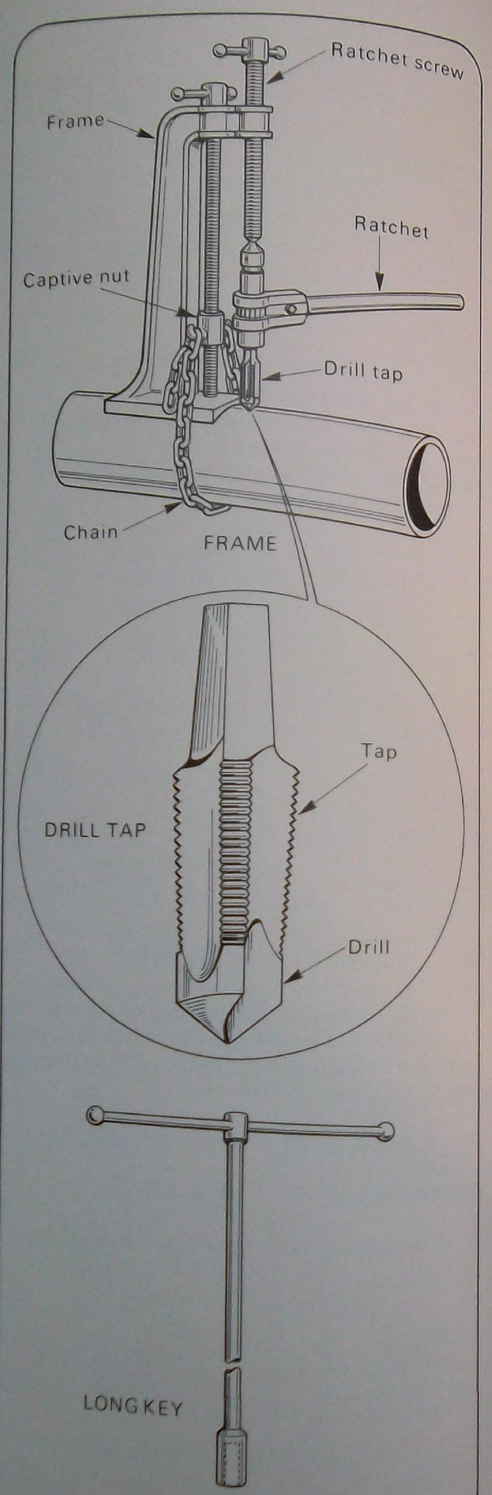

MAIN TAPPING TOOLS

5.3.2 Tapping under pressure

Tapping under pressure is usually done by employees of the supply authority. A special pressure tapping machine is used for this. It consists of a saddle, secured to the main by chains which are tightened by means of turnbuckles. The saddle supports a cylinder divided into an upper and a lower chamber by a shutter.

When closed, this shutter keeps the lower chamber watertight. The top of the upper chamber is closed off by a cap secured to it by nuts and bolts. The cap itself is bored to allow a drill bar to pass while the upper chamber is large enough to house the ferrule to be inserted after drilling and tapping has been completed.

The drill frame attaches to shackles of the chains, supports the drill bar and ratchet and accommodates the clamping screw which secures the drill bar and provides the required drilling and tapping pressure.

Air and water release valves are provided to the upper chamber.

- A centre mark is made on the main where the ferrule is to be installed.
  - — The centre mark is made to provide proper drill location.
- The machine is installed to the main and directly over the centre mark.
- The drill bar is passed through the cap, the drill tap attached and the cap secured to the upper chamber.
- The release valve is opened.
- The clamping screw is tightened down and drilling/tapping started by clockwise rotation of the ratchet, maintaining the necessary pressure by gradually screwing down the clamping screw.
- When the drill breaks through the mains wall, air and water escape from the release valves.
- The release valves are closed and tapping continued until sufficient thread depth has been obtained.
  - — This is indicated by the depth that the drill bar has been lowered during the tapping operation.

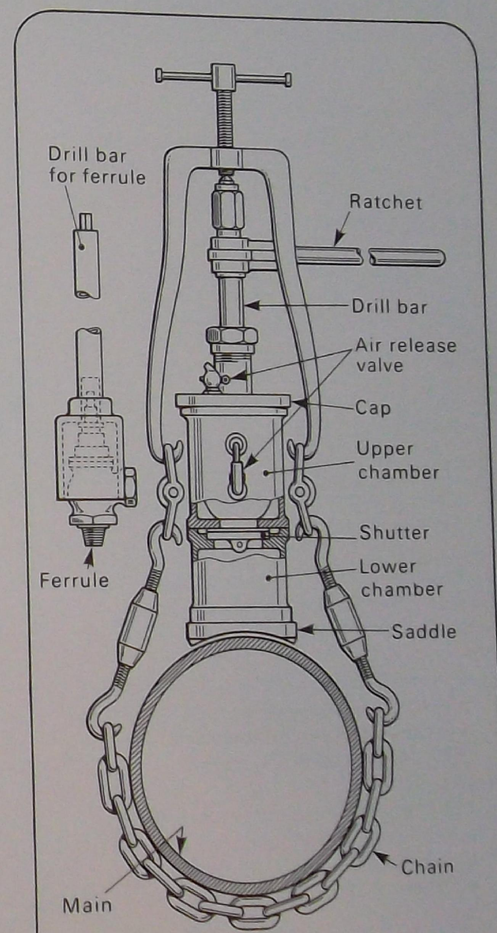

TAPPING UNDER PRESSURE MACHINE

- When sufficient thread depth has been obtained, the clamp screw is released and the drill tap is screwed out of the main and raised into the upper chamber by the drill bar.

- The shutter is closed and the cap removed.
- The water pressure is confined to the lower chamber.
- The drill bar for the ferrule is inserted in the cap, the ferrule attached and the cap replaced.
- The shutter is opened, allowing drill bar to be lowered and the attached ferrule to be installed in the tapped thread, using the ratchet mechanism, as before.
- When the ferrule is secured, the machine is dismantled and the ferrule further tightened and adjusted to its required alignment.

NOTE:

When AC mains are tapped under pressure, the machine is attached to a tapping band which already has the tapped hole; the main being drilled only.

An alternative means of tapping under pressure is by using a special ferrule, tapping band and drill tool adaptor. The procedure is as follows:

- The tapping band, with its inbuilt seal, is bolted to the main.
- The ferrule, which has a threaded plug screwed into the top, is screwed into the tapping band.
- The valve of the ferrule is opened, the plug removed and a short length of hose connected to the bend.
- The drill tool, with the appropriate drill fitted to it, is screwed into the ferrule and the feed handle rotated until the drill is hard against the main.
- Drilling is commenced by rotating the ratchet and is continued until the main is fully pierced and water flows from the hose.
- The feed handle is unscrewed and withdrawn from the body and the valve turned off.
- The drill tool body is then unscrewed from the ferrule and the plug replaced.

The ferrule is now ready for connection of the service pipe.

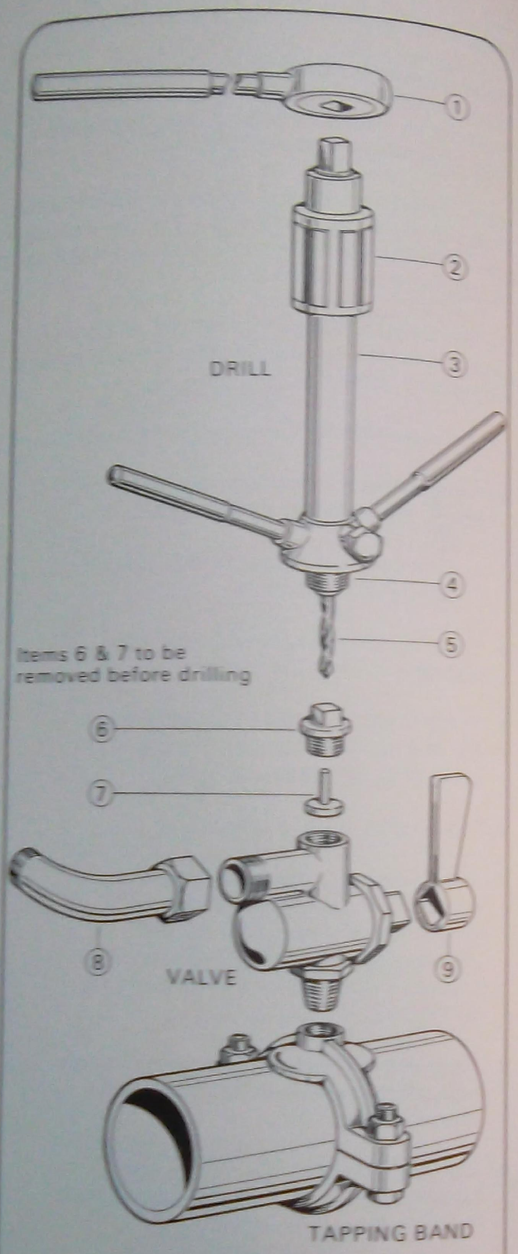

1. Ratchet	4. Adaptor	7. Reflux valve
2. Feed handle	5. Drill	8. Bend
3. Drill body	6. Plug	9. Valve handle

TAPPING BAND AND DRILL TOOL

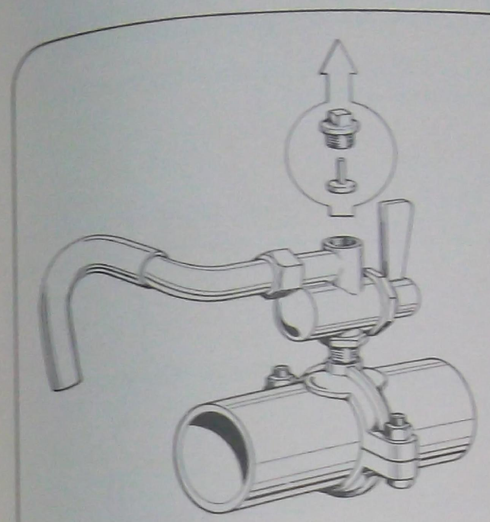

1 Plug and Reflux valve removed-Valve opened

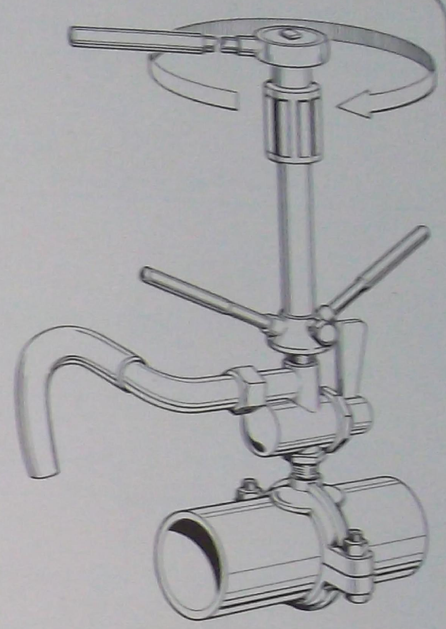

2 Drilling starts

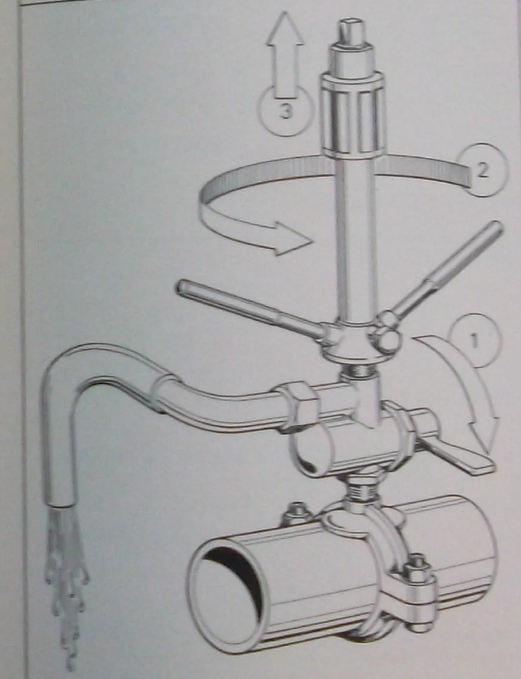

3 When water flows from hose –
1 Close valve
2-3 Stop drilling and remove Drill tool

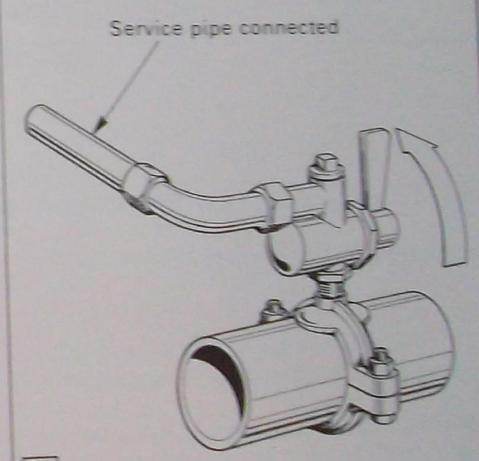

4 Operation completed-Connection made-Valve opened

SEQUENCE OF OPERATION
(TAPPING BAND AND DRILL TOOL ADAPTOR)

5.3.3 Tapping small diameter copper mains

Tappings to small copper mains should be made by inserting a copper to FI (female iron) tee in the main using compression couplings or a copper to FI capillary tee type S with silver brazed joints.

The FI outlet and the ferrule should be kept in a vertical position. The illustration shows the arrangement of copper to FI tee and ferrule using compression fittings.

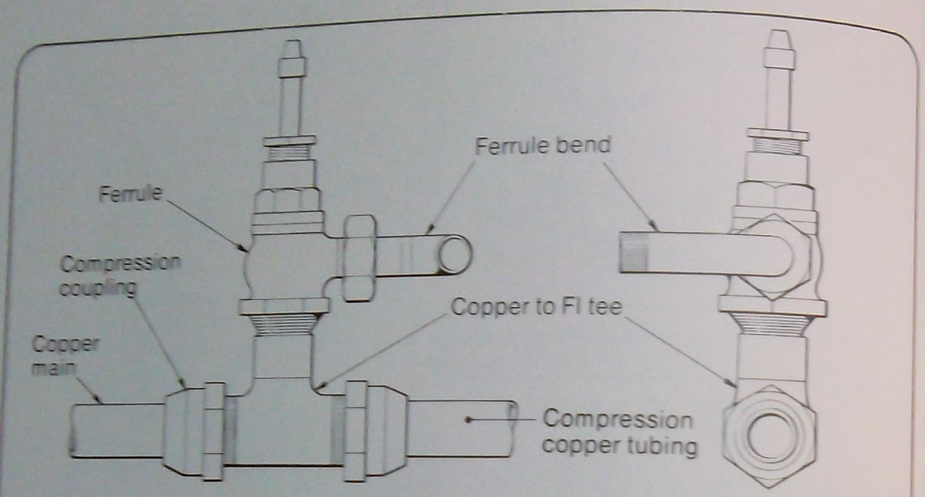

TAPPING INTO SMALL COPPER MAINS

Under no circumstances is a triple union copper or soft-solder capillary tee to be used.

The Approved Authority will ensure that tappings are carried out only in the approved manner.

NOTE:

This is normally the method used for copper trunk service or court services.

Similar methods, where permitted, are used where the material is galvanised pipe. The fitting (tee) is a galvanised tee with the ferrule remaining the same.

5.3.4 Large tappings (tee-insertions)

These are made to cater for the following:

- Fire services
- Domestic services
- Sprinkler services

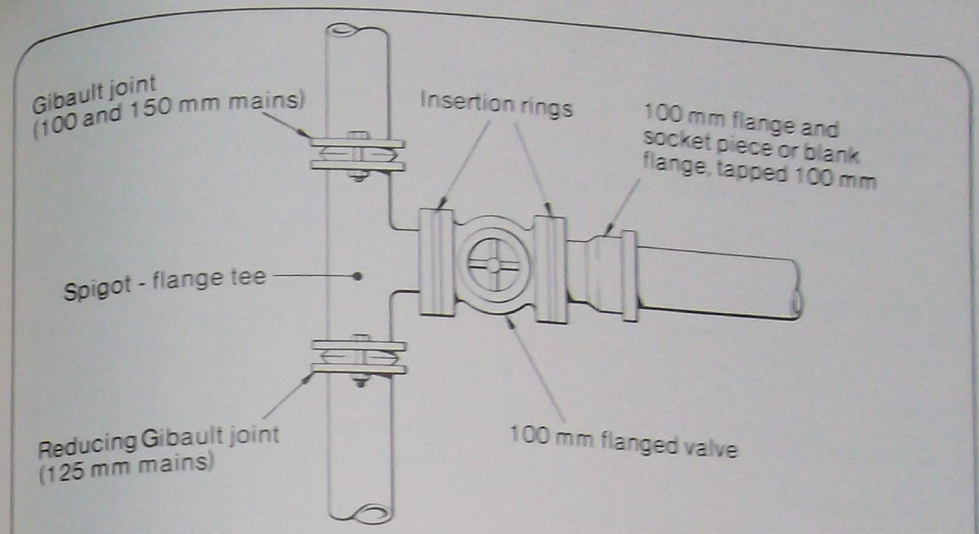

100 mmSERVICES FROM 100, 125 AND 150 mm MAINS

Flanged fittings must be used when available and their installation should be as shown in the illustrations following.

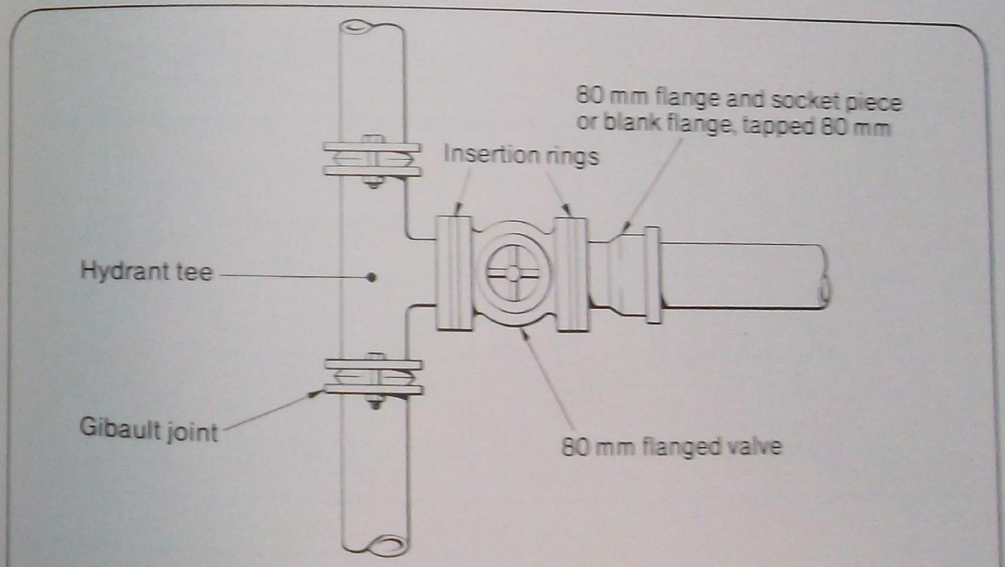

80 mm SERVICE FROM 80 OR 100 mm MAIN

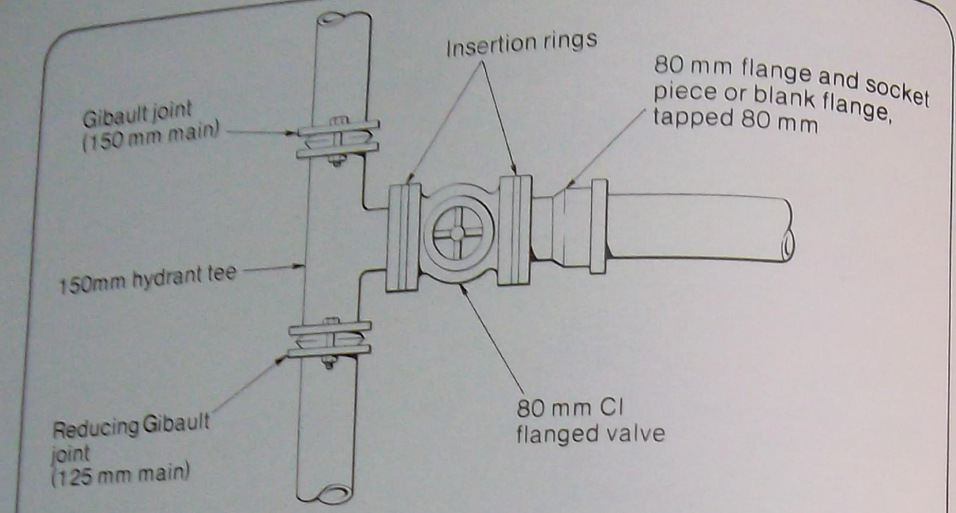

80 mm SERVICE FROM 125 OR 150 mm MAIN

5.3.5 Combined fire and domestic water services

The general layout is shown in the illustration below.

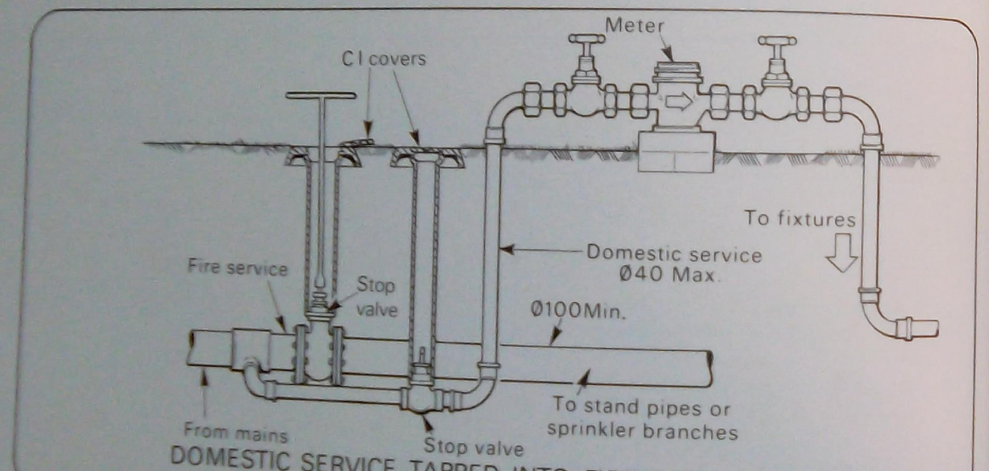

DOMESTIC SERVICE TAPPED INTO FIRE SERVICE

At tenements which are unfenced on the building line and have a permanent open area in front of the building, it is permissible to locate the controlling stop taps on the fire and general services as well as the meter connections just inside the building line. The stop taps and meter connections should then be fixed above ground or all may be housed below ground level in a properly constructed and drained brick or concrete pit.

NOTE:

For further information on fire and sprinkler services, refer to Water Supply Manual 11-3.

5.3.6 Trident service

This type of service saves two or three tappings (tee insertions) where three different types of services are required. The illustrations below show the diagrammatic layout of such a system.

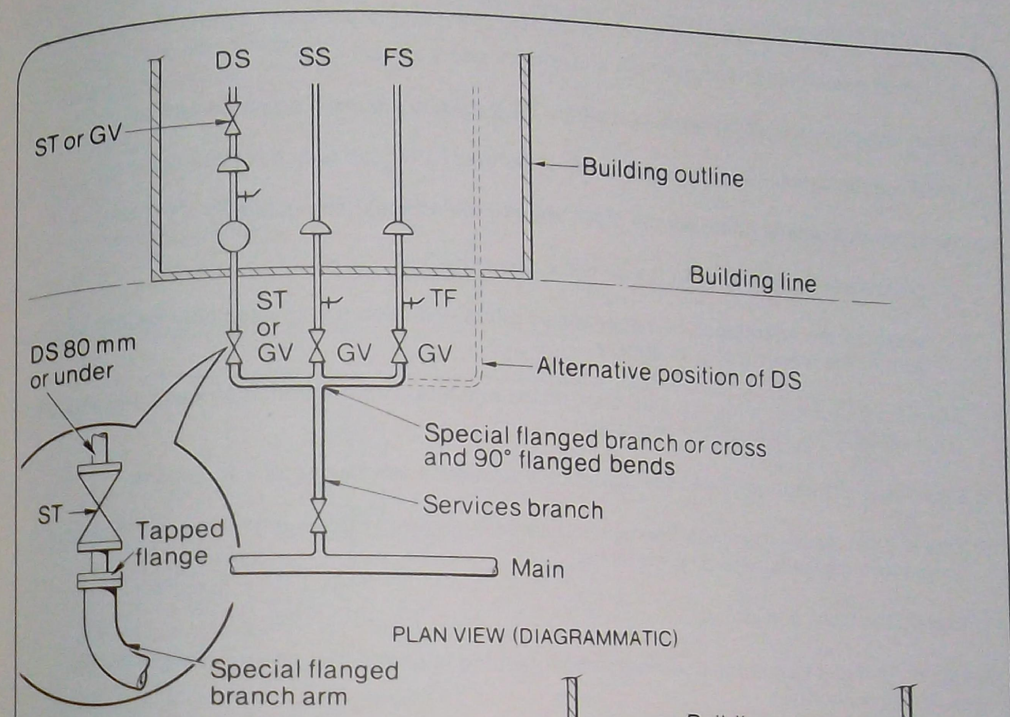

PLAN VIEW (DIAGRAMMATIC)

Abbreviation or symbol	Meaning
DS	Domestic service
SS	Sprinkler service
FS	Fire hydrant service
ST ⋈	Stop tap
GV ⋈	Gate valve
RV ▷	Reflux valve
TF ⊣	Testing ferrule
	Meter

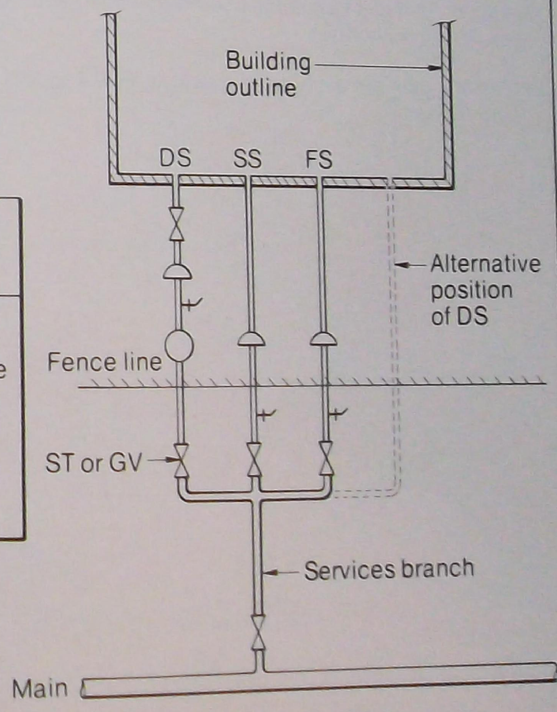

PLAN VIEW

TYPICAL TRIDENT SERVICE INSTALLATIONS

REVISION QUESTIONS

1. What requirements must be satisfied for connecting the water supply to fixtures?
2. What is meant by 'cross connection'?
3. a What is the chemical symbol for water?
   b What does it mean and in which states does water occur?
4. What determines whether water is 'soft' or 'hard' and how does it come about?
5. What are the various ways in which water is purified? Discuss fully how this occurs.
6. What are the general names of the pipes used in the reticulation system?
7. a What materials are used in the construction of mains?
   b What are the advantages of rubber-sealed joints and describe an assembly sequence for a joint in the material of your choice.
8. Apart from a flanged joint in a mild steel mains pipeline construction, name and describe the other types of joints and their application.
9. Describe the Gibault joint and the operational sequence for making one in a main.
10. Why is it necessary to secure the mains installation against movement? Describe how this is done and where. Illustrate by preference.
11. Explain the trunk service.
12. Explain in detail how a domestic water-main tapping is completed under pressure by the Approved Authority.
13. Explain, with the aid of neat drawings, how a trident service is set out complete with all valves and fittings.

6 MATERIALS USED FOR WATER SERVICES (PIPES & FITTINGS)

The materials used for water services include a range of pipes, fittings, valves, taps and seals for carrying and controlling the flow of water from the mains to the various outlets required in an installation.

6.1 SERVICE PIPES

The term 'service pipe' includes all pipes installed to serve the needs of a consumer. Some of these pipes are also known as:

- Distribution pipes
  - These service pipes carry the water within a user's property to discharging points, e.g. fixtures.
- Risers
  - These are service or distribution pipes which carry the water to storage tanks or to elevated property positions.

NOTE:

Service pipes start at the mains.

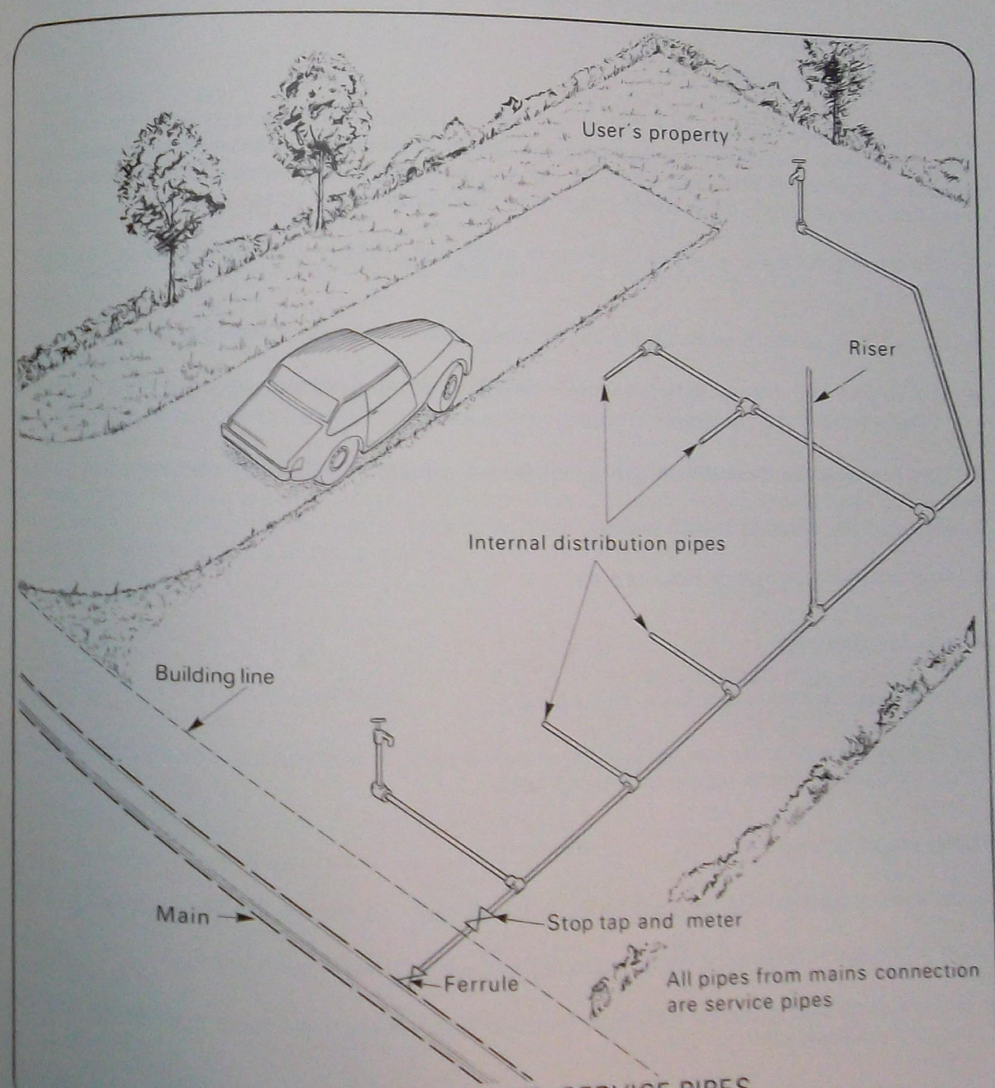

DISTRIBUTION AND SERVICE PIPES

6.1.1 Types of pipes

Service pipes are manufactured from the following materials:

- Copper
- Galvanised steel (GS)
- Plastic (UPVC and Polyethylene)
- Stainless steel
- Brass
- Cast iron
- Asbestos cement

Each type is available in various sizes.

6.1.2 Copper pipes

Drawn copper pipes are measured at their outside diameters. They are widely used for connecting various fixtures and appliances to service pipes. These pipes are specified by some water supply authorities as the only permissible type for use in connecting users' service to the mains. The characteristics of copper pipes which make them durable for this purpose are:

- Smooth internal surface, ensuring minimum friction and promoting a high volume of water flow.
- Wall of great strength, enabling the use of pipes with thinner walls than galvanised pipe.
- The external and internal surfaces quickly develop a protective oxide coating which prevents further corrosion.
- They are easy to anneal and bend and they are not affected by vibration stresses.
- They may be brazed or bronze welded.
- They are easily chrome or nickel plated.

Material specifications

Copper pipes must be in accordance with AS 1432.

Copper alloy pipes must be type 259D, 70/30 arsenical brass in accordance with AS 1567 and must comply dimensionally with copper tube to AS 1432.

Fittings specifications

Copper and copper alloy fittings must comply with AS 1585, AS 1590 or AS 1645 where applicable.

Copper fabricated fittings must comply with the following:

- Sockets fabricated in copper tube must be made with the approved tools specifically designed for such purpose.
- Fabricated junctions and fittings must be made from types A, B, or C tube, with the approved tools designed for such purpose.

- All fabricated socket junctions and other fitting joints must be silver brazed or bronze welded.
- All fabricated sections or installations may be required to be hydrostatically tested to 200 m head pressure (= 2 MPa).

Restrictions on use

Type 'D' tubes

- Type 'D' tubes must only be used in the 'as drawn' condition, except that local annealing is permissible where necessary for making joints.
- Type 'D' tubes must not be bent.
  Type 'D' tubes must not be used in the meter assembly.

Unsuitable locations

Copper and copper alloy pipes and fittings should not be used, unless suitably protected against external corrosion where they might come in contact with material such as:

- Ash
- Sodium chloride (salt)
- Any compound containing magnesium oxychloride (magnesite).

6.1.3 Methods of jointing

The various approved methods of jointing tubes depend on the material used and the type of installation.

Screwed joints

These must be used between heavy thickness screwing quality copper or copper alloy tubes.

The most widely used thread combination is the parallel female and taper male threads. Complete matching of the threads always occurs at some point on the taper. Further tightening beyond this point ensures a watertight joint. Hemp packing or thread sealing tape is used between the threads to assist in the making of a watertight joint.

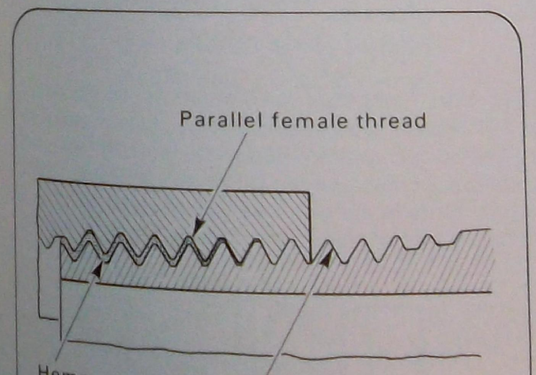

BSP THREAD ON GS PIPES

BSP THREAD DIMENSIONS

NOMINAL METRIC SIZE (mm)	THREADS PER 25 mm
7	19
15	14
20	14
25	11
32	11
40	11
50	11
DIAMETER TAPERS AT 1 IN 16 FOR ALL TAPERED THREADS	

In making such joints, the following must be observed:

- All tube threads must be in accordance with AS 1722.
- All fitting threads must be in accordance with the appropriate Australian Standard for the fitting.
- Where a sealing thread and a fastening thread are joined, a seal must be formed by using polytetrafluoroethylene (PTFE) tape, hemp or approved pipe jointing compound on metal threads, but only PTFE tape on UPVC threads.
- Where two fastening threads are joined, a seal must be formed as described above, or, where applicable, an appropriate gasket or grummet must be used.

Silver-brazed joints (capillary type)

These joints are held together by silver brazing alloy which is caused to flow, when hot, into the joint by capillary action. The fittings used in capillary type silver brazed joints are made from brass or copper and are so designed that the pipe ends may be pushed into the sockets of the fittings.

Silver brazing alloys for jointing copper and copper alloy must be in accordance with AS 1167 tables 1 or 2 only, and must contain not less than 1.8% silver.

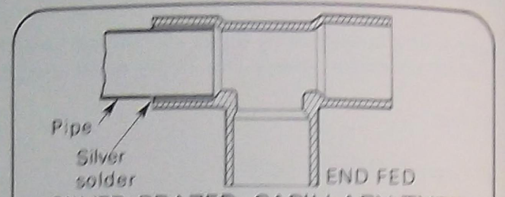

SILVER BRAZED CAPILLARY TYPE

Bronze-welded joints

The bronze welding filler rods used for these joints must be in accordance with AS 1588 and their copper content must not be less than 57%.

The joints in bronze welding must be formed by belling or other methods used for fusion-welded joints, so as to permit satisfactory deposition of weld material.

Types A, B, C and D copper tubes.

The joints between types A, B, C and D copper tubes must be:

- silver brazed; or
- bronze welded;
  - — Not permitted on type D tubes.
- made with compression fittings to AS 1645, except for D tubes where this method is not permissible.
  - — Expanded compression joints have flared or expanded pipe ends. The flared end is gripped between the machined face of a fitting and the cone-shaped tail of a union nut as illustrated. Alternatively, the joint may be made by inserting a loose thimble (sometimes called an olive) between the two flared ends of the pipes to be joined. The joint is then made by a set of matching male and female union connections which, when tightened, compress the flared ends of the pipes tightly against the machined thimble.

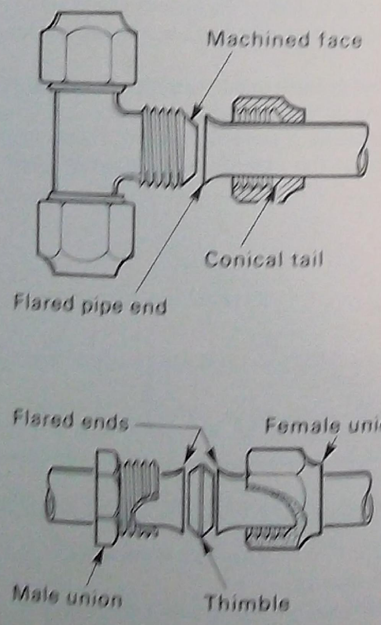

EXPANDED COMPRESSION JOINTS COPPER PIPES

- made with capillary fittings to AS 1585, table 1B and silver brazed;
- made with capillary fittings to AS 1585 table 1A and soft soldered.
  - — Soft solder composition must be nominally: one part of lead to one part of tin (50/50), and must comply with AS H1.

Preloaded sockets

The sockets are made with an annular ring filled with solder during manufacture. The joint is made by applying heat after the pipe end has been inserted. For the fitting shown, it is obviously necessary to have all three pipe ends inserted before heat is applied to the joint.

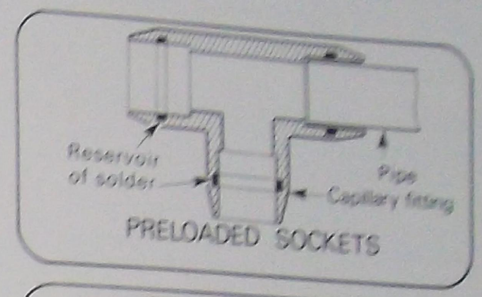

PRELOADED SOCKETS

The engagement depth is important, because there are two different lengths.

'L' = long
'S' = short.

'L' may be used for 'soft' (50/50) solder as well as for 'hard' silver solder.

'S' can only be used for 'hard' silver solder.

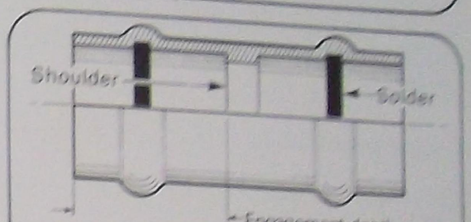

CAPILLARY STRAIGHT COUPLING

Copper pipes to flanged valves and fittings

Joints between copper water service pipes larger than 65 mm and flanged valves or fittings must be made using cast brass or gunmetal flanges into which the copper or copper alloy pipes must be:

- silver brazed for tube types A, B, C, D and for the screwing class; or
- bronze welded for tube types A, B, C and screwing class only.

The flanges must be secured to the flanges of valves and fittings by gunmetal or extruded brass bolts and nuts; the joint to be made watertight with a gasket of approved material.

6.1.4 Galvanised steel pipes

These pipes are made from mild steel. Both surfaces are coated with zinc to prevent corrosion. They are cheap, strong and easy to install. The size is specified by the nominal inside diameter of the pipe, expressed in millimetres. Galvanised pipes are subject to corrosion when used for soft water and this corrosion causes discolouration of the water and restrictions in the pipe bore. Also the outer coating can be affected when in contact with certain types of soil which, after eating away the coating, leave the unprotected base material open to corrosive attack.

Galvanised steel pipe joints

The pipes are joined together with internally threaded sockets using hemp or plastic tape as a sealant. The thread on the ends of pipes is cut with a thread cutter (stock and die) in the manner described in Manual '1-9 Handtapping and Thread Cutting', Section 4.

To ensure a good joint is made, the pipe ends and the thread must be cut square to the pipe centre line. This way, there is proper pipe alignment and a good fit with the socket. The two pipe ends must not abut against each other inside the socket, because in tightening one of the ends, the fitting or the threads could be damaged; a leaking and useless joint will have to be remade.

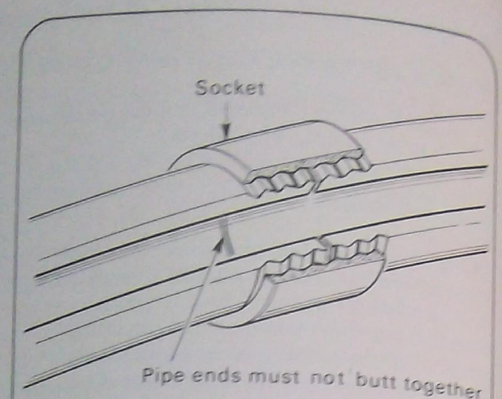

GALVANISED PIPE JOINT

Material specifications

Galvanised steel tube must be in accordance with AS 1074.

For pipe sizes less than 100 mm, 'heavy' wall thickness tubing must be used, and for pipe sizes 100 mm or larger, 'medium' or 'heavy' wall thickness tubing must be used.

Screwed fittings must comply with AS 1590, BS 143 and BS 1256, as applicable.

Welded fabricated fittings must be hot-dipped galvanised after fabrication and tested hydrostatically to 200 m head pressure or by other approved means.

Restrictions on use

Galvanised steel tubing and fittings must not be concealed within walls (including ducts), floors or ceiling spaces of buildings.

Galvanised steel tubing must not be bent.

Unsuitable locations

Galvanised steel pipes and fittings may suffer rapid corrosion in certain types of acidic soils, unless suitable protective coatings or wrappings are applied.

British standard pipe thread

This type of screw thread is used for pipe connections and the attachment of pipe fittings. It is usually referred to as BSP thread. It may be tapered or parallel. All water supply fittings for galvanised pipe are threaded to this standard. Most female outlets have parallel threads. The tapered and parallel types of BSP thread may be used in the combination of parallel female and parallel male threads. This combination is often used when attaching a pipe to a fitting by means of a plain nipple, or when joining two pieces with a long screw.

6.1.5 UPVC pipes

The pressure pipe version is becoming popular for internal installation in some localities. The assembly of a system of water distribution is simplified because of the ease with which this can be done. A large range of fittings is available. A variety of adaptors exists for combining UPVC pipework with systems of other materials. The joining of pipes is usually done by solvent welding as previously described.

However, there are a few restrictions that have to be observed when using these pipes.

UPVC pipes and fittings must be in accordance with AS 1477 class 18, or as approved. (See Tables section 4.5.7).

Restrictions on use

UPVC pipes and fittings must not be concealed within walls (including ducts) floor or ceiling spaces of buildings, or used above ground where they are exposed to direct sunlight.

Method of jointing

The jointing of UPVC pipes can be done by means of:

- solvent-welded joints;
- rubber-ring joints; or
- other methods as approved by the Authority.

Special installation requirements

- Earthing electrical installations.
  - Being a non-conductive material, UPVC cannot be used as a means of earthing electrical installations, or for dissipating static charges.
  - Metallic water pipes must not be replaced with UPVC pipes until the earthing system of the electrical installation has been checked and modified, if necessary, by a licensed electrical contractor.
  - Prior to using UPVC pipes in a new water service, the Statutory Electrical Supply Authority must be notified.
- Hot water cylinder supply.
  - Where UPVC pipe is used for cold water supply to a directly connected HW cylinder, it must not be used for the last 1 m or such a connection and must not be taken beyond the check valve.
- Stand-pipes
  - All stand-pipes, except where fixed to a building wall, must be of approved metallic material and firmly clipped to a suitable support to prevent stress being imparted to the underground pipe in the event of strain being imposed on the riser pipe.

- Installation below ground.
  - Care should be taken to ensure that pipes installed in trenches are clear of sharp objects such as rocks, brickbats, etc. Preferaby the pipes should be surrounded with fine spoil or sand.
- Repairs to service.
  - Approved thimble-type fittings should be used if the service is to be put into immediate use. Repairs with solvent cement are not suitable unless the service can be left for 24 hours before water pressure is applied.
- Connections to pipes of other materials.
  - Fittings with screwed end connections for accommodating pipes of other materials may be used, provided both threads are of the fastening type.
  - Screw threads must not be cut on UPVC pipe.

NOTE:

All other precautions must comply with AS 2032.

6.1.6 Polyethylene pipes

The material from which these pipes are made is sometimes also referred to as 'Polythene' and abbreviated to 'PE'. The material for pressure pipes used in water supply, and other installations, is a high-density type of PE. The pipes are made by an extrusion process to various bore sizes and pressure ratings.

PE pipes are light, flexible, tough and easy to install by using the specially adapted compression fittings. Because the material from which the pipes are made contains a certain amount of carbon black, sunlight has no effect on it; it is also resistant to chemical and electrolytic corrosion.

The smooth bore of the pipes ensures a minimum of restriction to waterflow.

The pipes are supplied in long-length coils, making the need for joints relatively small.

The material has a rather high coefficient of thermal expansion, but this can be counteracted by 'snaking' the pipes in some cases instead of fixing them rigidly in the one plane or in a straight line at their ends or at intermediate supporting points.

WARNING:

Plastic pipes (UPVC and PE) do not conduct electricity and they cannot be used for earthing electrical wiring installations as is done with metallic pipework.

Where alterations to metallic water supply pipes become necessary and replacements are to be made in plastic piping, the plumber should bring to the notice of the property owner that he must arrange with a qualified electrician to have a proper main earthing conductor connected up before the plastic water supply work can be installed. (This may not be required in new buildings in which specifications call for a plastic water supply installation.)

Installation requirements

The installation of PE pipework for water supply is restricted to:

- Cold water installations.
- The property boundaries.
- The outlet side of the meter.
  - The PE (or other plastic pipe) must end at the vertical riser to the meter, and the connecting pipe from there to the PE fitting must be of approved metal in the case of meter installations above ground.
  - For installations of the meter below ground, the plastic pipe may be connected directly to the meter, provided the water meter assembly is properly supported.
- Underground installations, but is not permitted under building slabs.
- Above ground installations.
  - But not within walls, ducts, floor or ceiling spaces.
- The use of compression type fittings of the approved standard and of the correct size.
  - The fittings to be used have identifying marks or labels for proper matching with the standard of pipe for which they are designed.
- Connection to the inlet side of a directly connected hot water cylinder.
  - Here also, the PE pipe must end not closer than 1 metre from the HW cylinder inlet connection and not be taken past the non-return valve. (HW installations are dealt with in 'Water Supply — 4').

Handling and protection

Tough and resilient as they are, PE pipes should not be dropped, dragged along or roughly treated. When laid in trenches, they should be at least 300 mm below ground surface level and properly covered by back-fill to protect them against mechanical damage. There should be no sharp objects, rocks or brickbats resting against them. When placed in rocky ground, the pipes should be protected from damage by placing soil, sand or light screenings around them.

6.1.7 Making PE pipe joints

Use only approved brands of pipe for the installation. These may bear the manufacturer's name, but must show the mark: 'Type 50 Polyethylene — Class 15. Instead of 'Polyethylene' they may show: 'Polythene or PE' and in addition, the Australian Standard may be shown (AS K 119 for imperial sizes or AS 1159 for metric sizes).

The procedure for joining PE pipes together, applies also to the making of connections to the range of fittings that must be used with them. Consult manufacturers' catalogues for the full range of fittings available for PE pressure pipework installations.

To make a PE pipe joint, proceed as follows:

- Cut the proper lengths of pipe, using a hacksaw or a fine-toothed woodsaw.

— Cut the pipe squarely, using a mitre box if necessary.

- Remove burrs and swarf from the pipe ends with sand paper or a fine cut file, making sure no material remains in the pipe bore.

- Select the proper pipe joining fittings for the size of pipe being used.

  — The pipe joining fitting consists of a body (compression nut) with threaded ends, two lugged nuts, two wedging rings (blue) and two tapered thimbles. (The thimbles are colour-coded for correct matching with the service line pressure.

NOTE:

Colour coding of items and the details given on pages 86 and 87 refer to one particular brand of fittings that are available. Consult manufacturers' catalogues for alternatives, or ask your instructor to show you the range available.

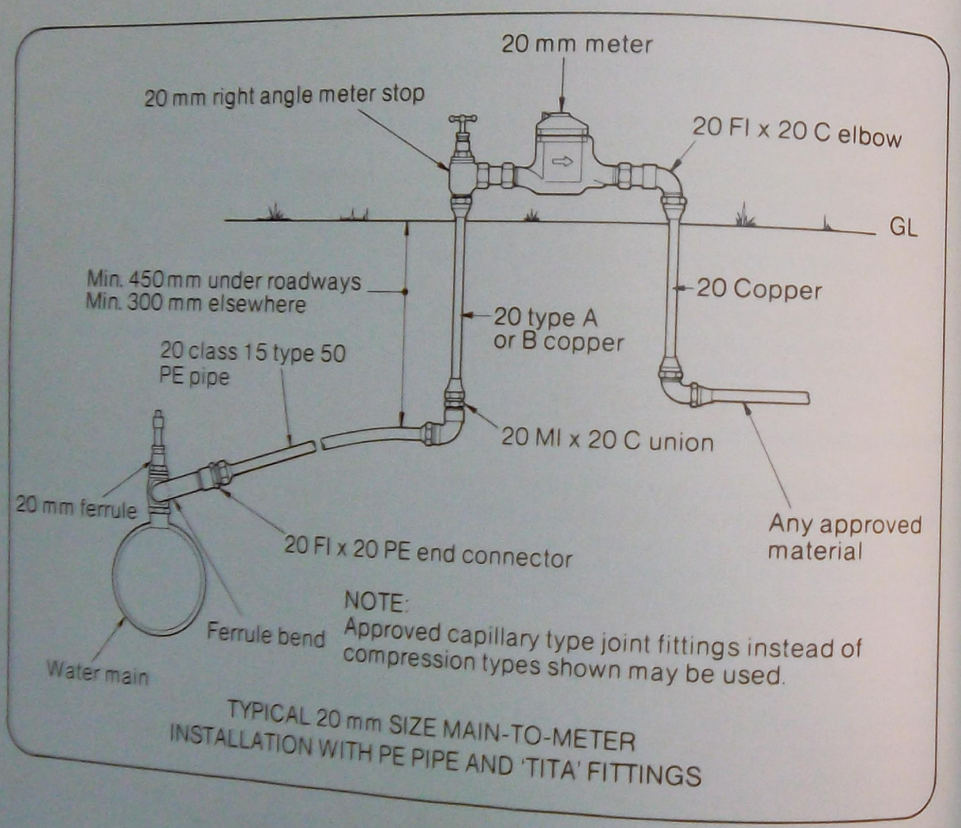

TYPICAL 20 mm SIZE MAIN-TO-METER
INSTALLATION WITH PE PIPE AND 'TITA' FITTINGS

To make a joint:

- Unscrew the lugged nuts from the pipe fitting and slip one over each end of the pipes to be joined, as shown in (1).

- Slip a wedging ring over each end of the pipes (1).

- Insert the appropriate tapered thimble into each pipe end and drive it carefully home with a square-faced mallet (2) and (3).

- Insert one pipe end into the body of the compression nut and screw the lugged nut to the compression nut, making sure the pipe end is not pushed out (4).

- Hold the lugged nut, by hand or with a suitable wrench, and tighten the body to the lugged nut by using a close-fitting spanner on the flats of the body.

  — No great force is necessary for tightening, because the joint tightens up under line pressure.

- Repeat the process with the other pipe end.

  — When tightening up the other pipe end, make sure the first joint is not loosened.

The procedure remains the same for connecting the pipes to any of the fittings used, except of course that the various fittings take the place of the compression nut.

NOTE:

Check with the manufacturers for other methods of jointing or ask your instructor to show you examples.

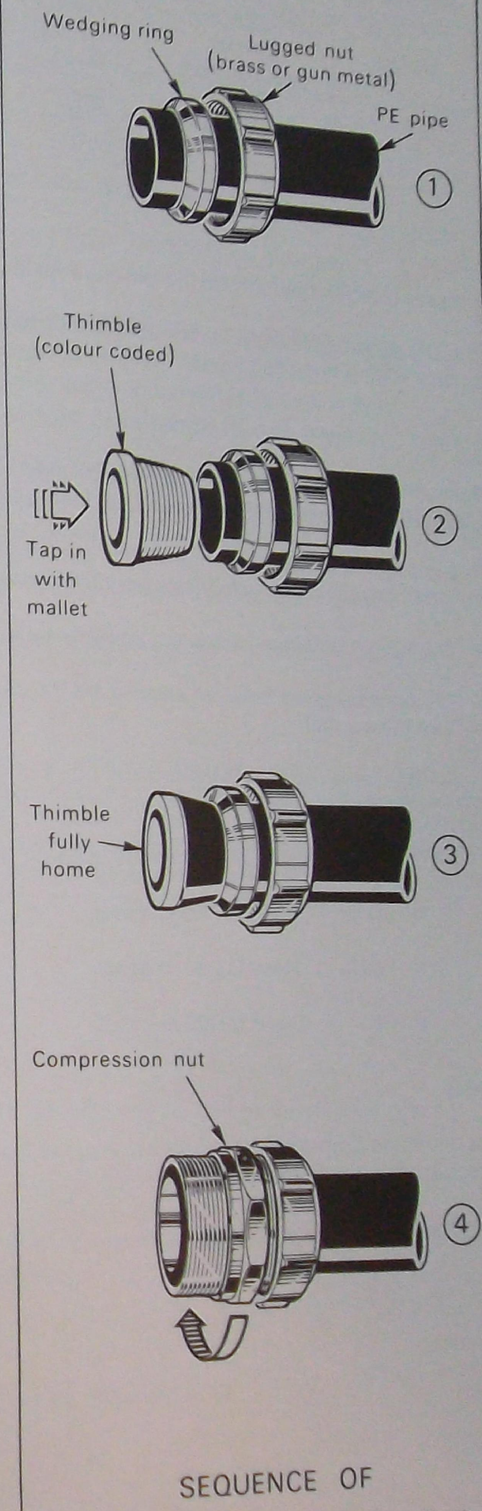

SEQUENCE OF
POLYETHYLENE PIPE JOINING

CLASS	PRESSURE RATING (Metres head)	THIMBLE COLOUR CODE	PIPE SIZES (mm)
12	120	RED	OD: 16 25 32 40 50 63
9	90	WHITE	OD: 32 40 50 63
6	60	BLACK	OD: 25 32 40 50 63

Classes 6 and 9 used only on low pressure installations and only with Supply Authority's approval.

The OD remains the same for the comparable bore sizes, regardless of class. That means, the same wedging rings and lugged nuts can be used between classes, but the thimbles will vary.

6.1.8 Conversion of imperial to metric

Before 1974, some installations in PE were made using 'inch' size pipes and fittings. In some cases, it may be required to branch into 'inch' size installations with metric size piping.

This is possible without much difficulty, but first it is necessary to be able to recognise the 'imperial' installation which differs from the metric in the following items:

- There is an octagonal brass nut instead of a lugged nut on the fittings.
- The nominal bores between classes are the same, but the OD for each nominal bore varies. That means that:

— The same coded thimble (usually brass or yellow glass resin) can be used for similar bores of different classes, e.g. 16 mm thimble for 16 mm pipe, classes B, C and D.

— Different wedging rings must be used for the various classes of similar bore pipes:

- Black — Class B (60 m head).
- White — Class C (90 m head).
- Red — Class C (120 m head).

NOTE:

Classes B and C correspond roughly to classes 6 and 9 respectively.
Class D corresponds to Class 12.

In most cases, converting or extending the imperial pipe system to the metric system can be done by using the existing imperial body size fitting and changing the wedging rings and the thimbles to the required sizes and pressure codes for the metric pipe.

Exceptions to this are tabulated below.

CONVERSION/EXTENSION OF IMPERIAL TO METRIC

IMPERIAL	METRIC	USE
Classes B & C Sizes 1¼", 1½", 2"	Classes 6 & 9 Sizes: 32, 40 50 mm	1. Metric conversion adaptor of proper size. 2. Proper metric thimble (black or white) according to pressure class on metric side. 3. Correct metric wedging ring on metric side.
Class D Sizes: 1¼", 1½"	Class 12 Sizes: 32, 40 mm	1. Appropriate metric thimble (red) on metric side. 2. Imperial wedging rings (red) can be used here.
Class D Size: 2"	Class 12 Size: 50 mm	1. Appropriate conversion adaptor. 2. Correct size thimble (red) on metric side. 3. Correct metric wedging ring on metric side.

6.1.9 Brass pipes 70/30 (copper alloy)

Solid drawn brass pipes are sometimes used as small diameter delivery pipes to and within fixtures. Brass pipes are specified by outside diameters and the size of wall thickness. Brass pipes are not suitable for use with compression joints, because they cannot be annealed (softened) to form the necessary flared ends. The joints used with brass pipes are screwed joints and the fittings used with brass pipes are also made of brass to avoid electrolytic corrosion that may occur between dissimilar materials in the presence of moisture. They may also be joined with capillary fittings or silver soldered.

6.1.10 Stainless steel pipes

Pipes

Stainless stell tubes must be in accordance with AS 1769 and AS G31 material grade 304.

Fittings

Fittings for use with stainless steel must be copper or copper alloy (70/30 brass) in accordance with AS 1585 or AS 1645 or other approved fittings.

Restrictions on use

Stainless steel may be used below ground only where approved.

Unsuitable locations

Stainless steel should not be used unless suitably protected against external corrosion, where it might be in contact with materials such as:

- Ash;
- Sodium chloride (salt); or
- Any compound containing magnesium oxychloride (magnesite).

Jointing methods

For pipework up to 25 mm:

- Compression-type joints using copper or copper alloy fittings in accordance with 1645.
- Capillary-type joints using copper or copper alloy fittings in accordance with AS 1585.
- Capillary-type joints using expanded sockets made in the stainless steel tube.
- Croxed-type joints using approved fittings.

For pipework larger than 25 mm:

- Butt welded using a tungsten inert gas (TIG) argon arc method; or
- Flanged joints equivalent at least to table F rating of AS 2129.

Jointing practice

The jointing methods used for stainless steel are:

- Soft-soldering.
  - Soft-soldered joints must be made using a phosphoric acid based paste flux. Chloride fluxes must NOT be used.
- Brazing.
  - Brazing alloy must be in accordance with AS 1167, Table 1, alloy A8.
- A fluoborate paste must be used for flux, and must be washed from the installation on completion of the joints.
- Croxed joints.

These joints must be made with an approved 'croxing' tool and using crox nuts in accordance with AS 1646.

- Argon arc (TIG) welding.
  - The gaps between abutting tube ends to be joined should not be greater than 0.5 mm.
  - For tubes of wall thickness less than 1.2 mm, a stainless steel back-up ring, approximately 6 mm long, made from the tube being joined, must be fitted inside the tube to straddle the joint.
  - The filler rod used must be stainless steel of the low carbon type and should not be more than 2 mm in diameter to ensure minimal heat input.
  - The ends to be joined should be butted and held firmly together and tack-welded in at least four spots around the circumference prior to welding the entire joint.

- Flanged joints.
  - Flanged joints must be made up by forming a stub flange of the same thickness as the tube, having a diameter conforming to dimensions 'F' in AS 2129.
  - The stub flange may be either rolled or welded to the tube.
  - A mild steel back-up flange must be used in accordance with AS 2129.
  - The gasket thickness must not be less than 3 mm.

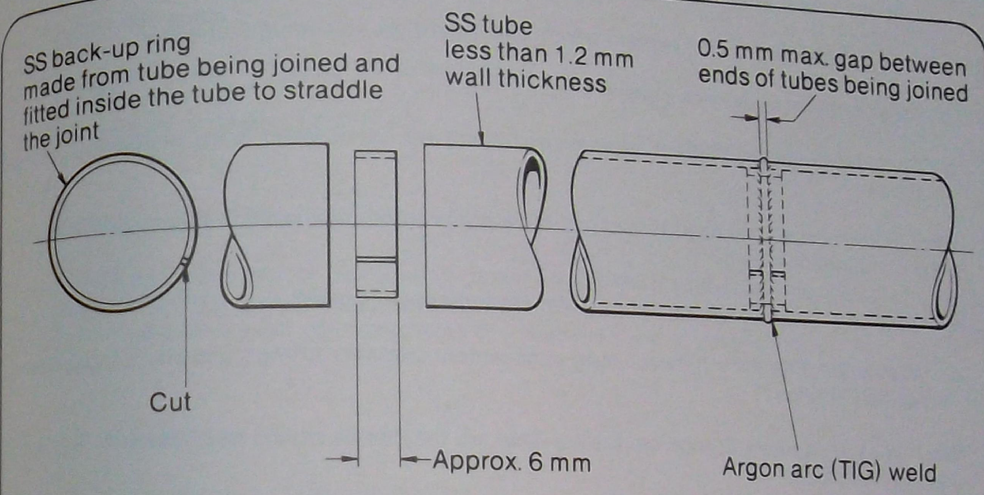

ARGON ARC (TIG) WELDING OF SS TUBING LESS THAN 1.2 mm WALL THICKNESS

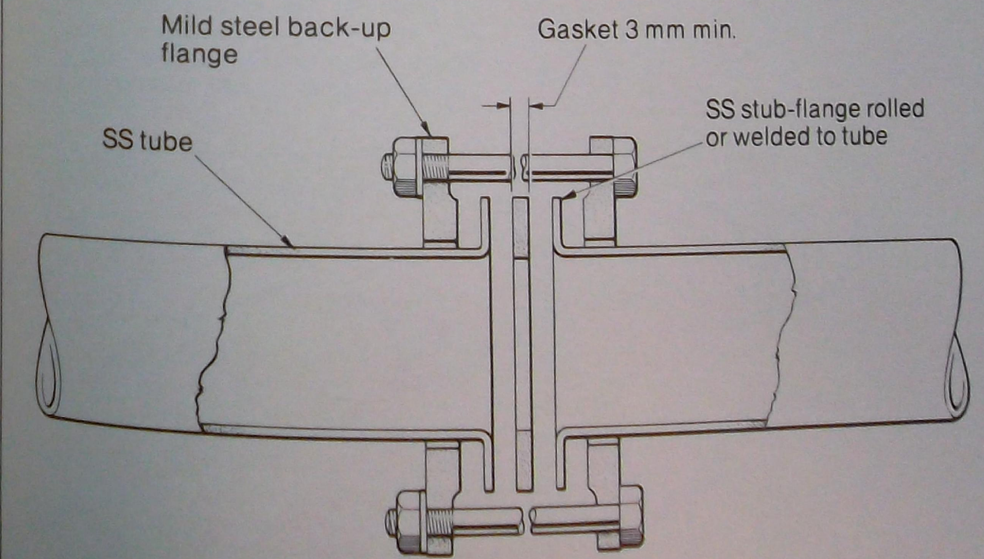

FLANGED JOINT IN SS TUBING

NOTE:

The various ways of jointing pipes are explained separately in greater detail in section 7.

REVISION QUESTIONS

1. a What is the difference between hydrostatics and hydraulics?

   b In what units can hydrostatic pressure be expressed?

   c A manometer fitted to a water container gives a reading of 85 cm. Calculate in kPa the pressure exerted on the bottom of the tank (1 cm $H_2O = 0.098$ kPa) (8.33 kPa).

   d A Bourdon type of pressure gauge gives a reading of 196 kPa. Determine the head of water corresponding to this pressure in metres. (Take 10 cm $H_2O = 0.98$ kPa) (20 m).

2. List the conditions in a pipe system which affect the flow and volume of water.

3. a What is meant by service pipes?

   b Some pipes are called distribution pipes, others are risers. What is the distinction between the two?

4. What is the most widely used thread combination for joining galvanised steel pipes. Are any other combinations used?

5. a What types of joint fittings are used for joining copper pipes?

   b What is the difference between long engagement capillary fittings and short engagement capillary fittings?

6. What types of capillary fittings are there? What are they made of and describe how they are used to join pipes.

7. How are brass pipes specified and how are they joined?

NOTES

7 FITTINGS FOR SERVICE PIPES

Various fittings are available for use in installing a new water service or when altering existing services. Fittings are used for:

- Joining pipes together or to appliances.
- Joining pipes of different diameters together.
- Changing pipeline direction.
- Sealing pipe ends.
- Teeing a new pipe into an existing service.
- Joining pipes of different materials.

7.1 FITTINGS FOR JOINING PIPES

For any pipe material used for distribution pipes, a great many fittings are available. In designing an installation, it is well to consult manufacturers' catalogues to gain an idea as to which fittings can be best used for overall economy, ease of installation and to save labour.

7.1.1 Galvanised steel pipes

Bends made too sharp in these tough pipes may result in the zinc coating cracking or separating from the parent metal, so destroying the anti-corrosive characteristics. Designing an installation with these pipes, requires the use of many fittings such as elbows, bends, tees, crosses, sockets, nipples, etc. The most satisfactory joining of pipework in this material is by the use of taper male threads in conjunction with parallel female threads and hemp.

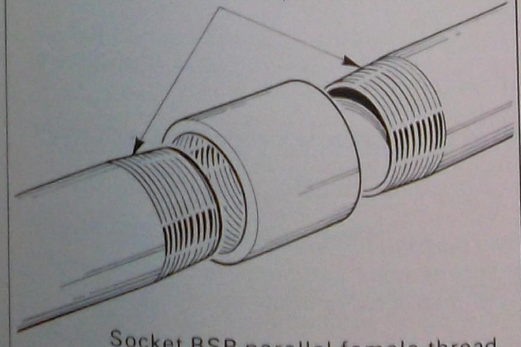

Socket BSP parallel female thread used to join galvanised pipes or to join pipes to outlets or appliances

SOCKET

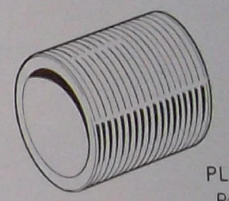

PLAIN NIPPLE
Parallel thread

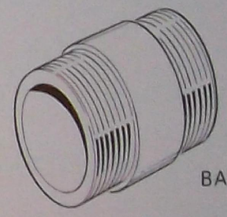

BARREL NIPPLE



HEXAGONAL NIPPLE

FOR JOINING GALVANISED PIPES (USUALLY WITH SOCKET) ALSO WIDELY USED IN JOINING PIPES TO OUTLETS & APPLIANCES

NIPPLES

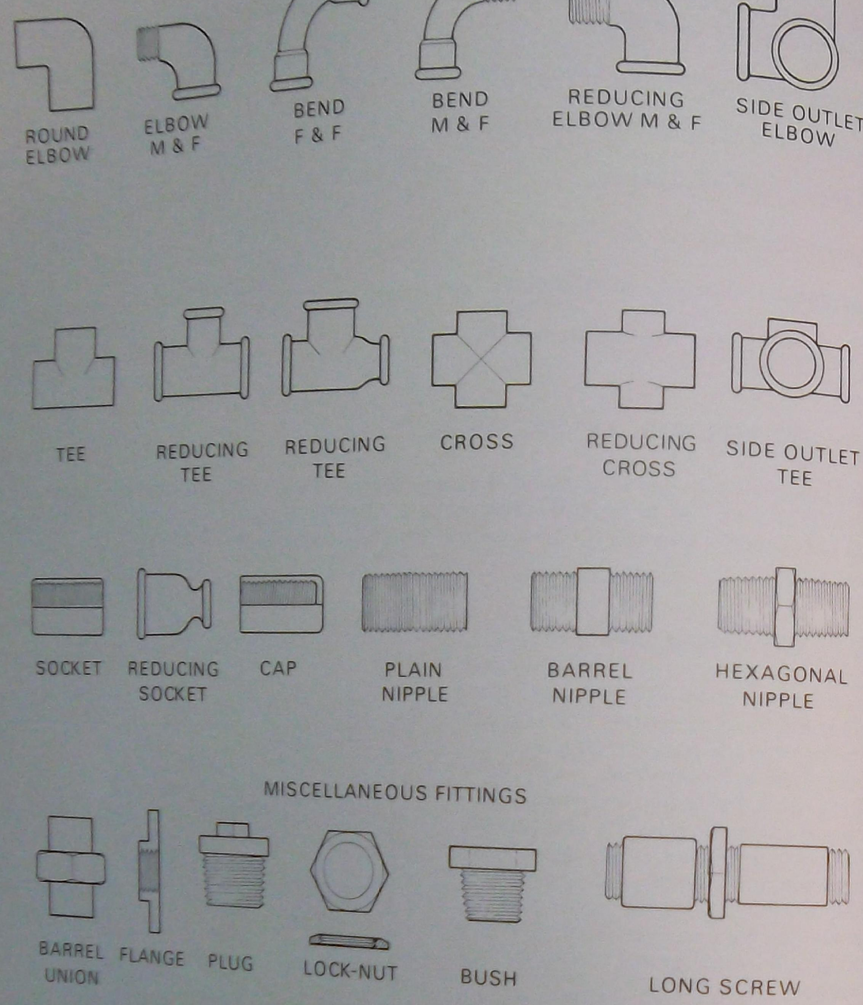

PIPE FITTINGS FOR USE WITH G S PIPE

NOTE:

The barrel union is often used in pipe repairs or where disconnections for maintenance purposes are required. Low-pressure unions, using gaskets or sealing rings and high-pressure unions with ground internal mating surfaces are available. Ask your instructor to show you these fittings.

Joining pipes of same diameter

This is usually done by using sockets and nipples in combination with sockets.

Joining pipes of different diameter

For this, bushes and reducing sockets are used.

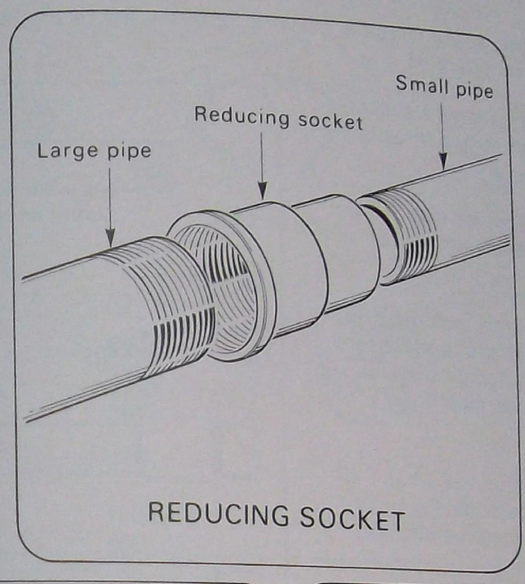

REDUCING SOCKET

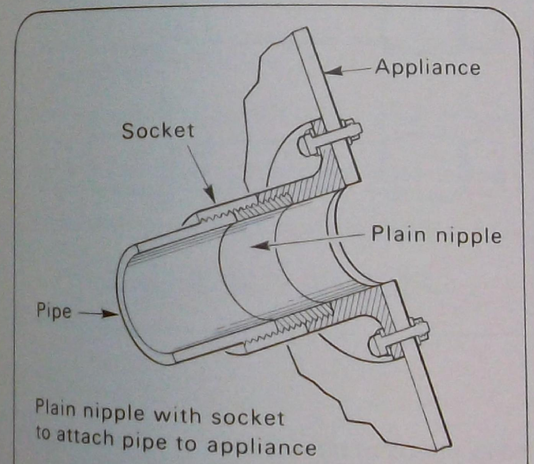

NIPPLE & SOCKET COMBINATION

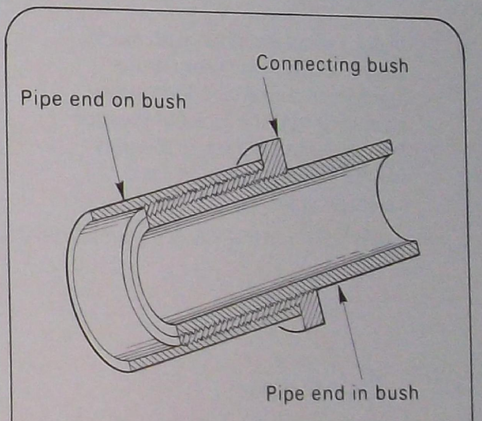

CONNECTING BUSHES

Directional changes and distribution

Changing the direction of flow is done using a range of bends, elbows and springs. Distribution to various areas of an installation can be done by inserting tees, crosses and such like fittings. Their use, as said earlier, avoids the need to make sharp bends in the galvanised pipes, but bends of up to 15° can be made without undue damage.

Closing off pipe ends

Plugs or caps may be used for this. Where a pipe ends on a socket, a plug will be used. On the other hand, if no socket is used, a cap may be fitted to close off the pipe end.

Use of the long screw

The long screw is a piece of pipe (of suitable diameter for the job) with an ordinary length of thread on one end and a thread long enough to take a socket plus a lock-nut on the other. The long screw is used to fill the space between two pipes that end in right hand threads.

To assemble a joint with a long screw, proceed as follows:

- 1 Ensure that the long screw length is a neat fit between the fixed pipe ends to be joined and that it is the correct size pipe.
- 2 If not fitted already, install a socket, using hemp or tape to one threaded pipe end, as shown.
- 3 Install the short threaded end of the long screw into the socket of the fixed pipe end.
- 4 Tighten the long screw end securely into the pipe socket with a suitable pipe wrench, using hemp or tape if necessary, to make a watertight joint.
- 5 Using hemp or tape on the other fixed pipe end, engage the long screw socket with the pipe end and tighten it.
- 6 Make a small grommet with hemp, wrap it around the thread at the junction of socket and long screw pipe, then turn the lock-nut towards the socket and tighten it securely against hemp and socket for a watertight joint.

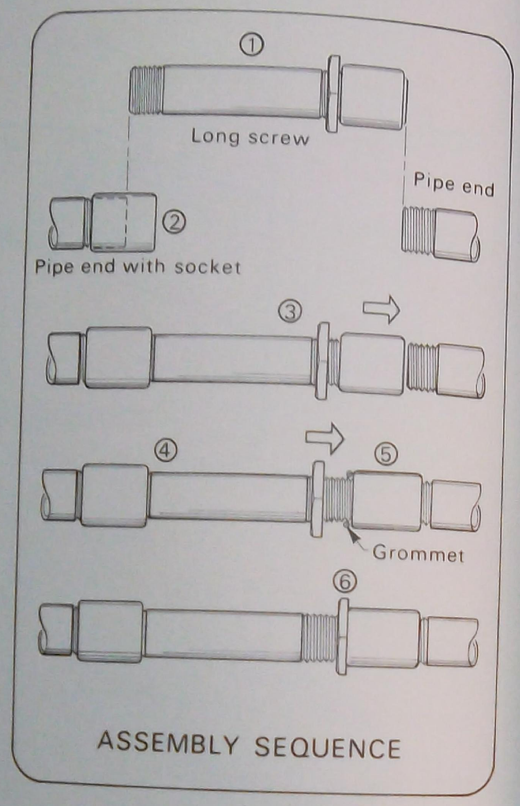

ASSEMBLY SEQUENCE

7.1.2 Copper pipes

Copper pipes made of screwing copper can be joined by means of threaded brass sockets or brass barrel unions as shown in the illustration.

These threaded fittings are sealed in the same way as galvanised pipe threads with either hemp, PTFE tape or an approved jointing compound. Brass elbows, tees or other similar brass fittings as illustrated may be used in the installation of copper pipelines.

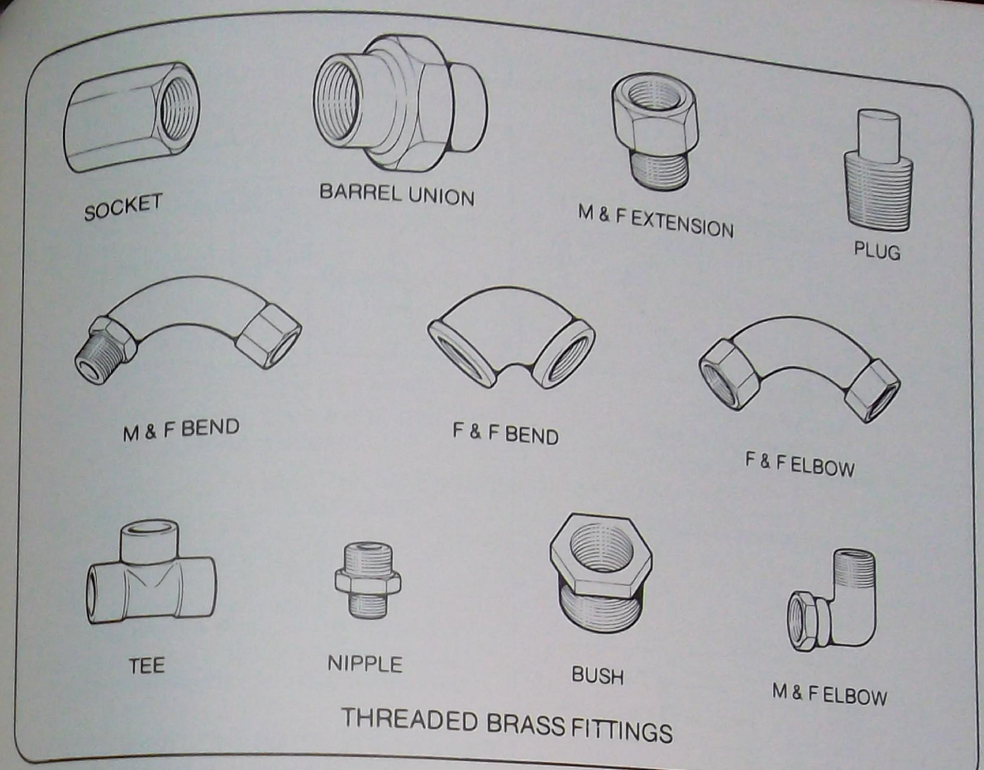

THREADED BRASS FITTINGS

7.1.3 Copper tubes

Copper tubes can be joined in a number of ways.

- With compression copper-to-copper unions.

Compression-type fittings made of brass and used with copper tube are shown in the illustration page 96.



C x C METER BEND



I.F x C METER BEND



C x C ELBOW



I.M x C ELBOW



I.F x C ELBOW



I.F x C LUGGED ELBOW

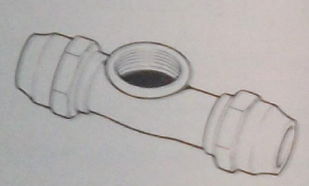

I.F CENTRE x C TEE



THREE-WAY TEE



I.F x C CENTRE TEE

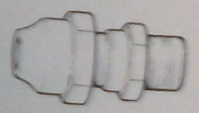

I.M x C UNION



C x C UNION



I.F x C UNION

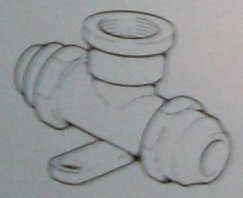

I.F CENTRE x C LUGGED TEE

SOME TYPICAL COMPRESSION FITTINGS

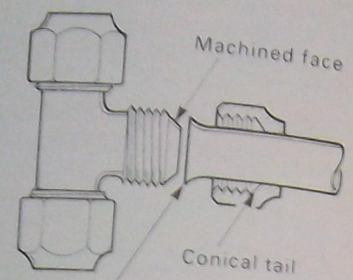

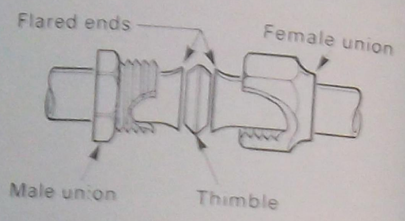

EXPANDED COMPRESSION JOINTS
COPPER PIPES

- With expanded capillary joints.
  - Normally made in the copper tube with a rast tube expander. (Tube must be annealed prior to expanding).

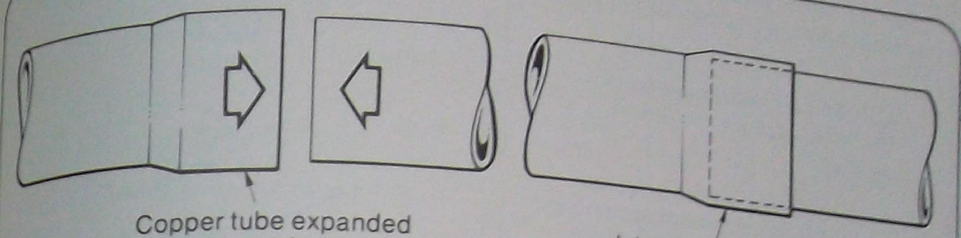

MAKING AN EXPANDED CAPILLARY JOINT

- Capillary joints.

These joints are the same as the expanded joints, but they are made to a size to accept the tube without any expanding of the tube.

Straight joints can be made by means of capillary straight couplings either soft soldered (preloaded) or silver brazed in either copper or in brass.

The range of such fittings is very large. Consult manufacturers' catalogues to gain an insight of the possible application of such fittings in an installation.

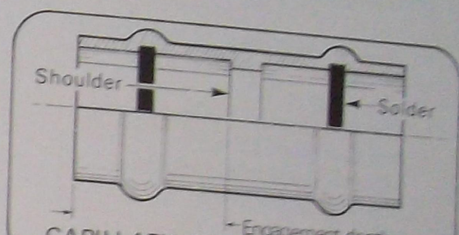

CAPILLARY STRAIGHT COUPLING

NOTES

Making a capillary joint

- Cut the tube end square, then ream, deburr and size it.
- Clean the capillary bores and the tube surfaces which will be inserted in the fitting.
  - No solder will adhere to a surface that is oily, dusty, or otherwise unclean.
- Apply flux to the outside of the tube and inside the cup of the fitting, making sure that the surfaces to be joined are completely covered.
  - Apply the flux carefully and sparingly.
- Bend the soldering wire over about the same length as the size of the fitting.
  - A 12 mm bend for a 12 mm diameter fitting.
  - For fittings over 50 mm diameter, the bent piece should be approximately three times the diameter of the fitting.
- Apply a flame to the fitting, heating tube and cup, until the solder melts when placed on the joint.
- Move the flame towards the centre of the fitting until the solder is absorbed and the joint completed.
- Remove excess solder while still plastic with the aid of a small brush or a piece of cloth.
  - Leave a fillet around the ends of the fitting while it cools.

NOTE:

The use of soldering wire is not required with preloaded fittings.



MAKING A CAPILLARY JOINT WITH SOLDER

- Bronze-welded joints.

Bronze-welding is another method of jointing copper tube. The type of joint to use on straight tube is the 'bell-mouth' joint, as shown. One end of the tube is flared by means of a block and pin to form a bell-mouth into which the end of the next tube is inserted. This forms a shallow cup for receiving the filler rod and should be about 1.5 times as deep as the wall thickness of the tube. The end of the inserted tube should be chamfered to obtain a good fit and the inside of the cup and the end of the inserted tube should be thoroughly cleaned.

To make a bell-mouth joint:

- Prepare the ends of the tubes as explained.
- Secure the ends in position, ensuring proper line-up.
- With the blowpipe flame set to 'neutral', pre-heat both adjacent tube areas to dull red heat.
  - Keep the inner tip of the flame away a little distance from the joint to obtain spread and uniformity of heat.
  - At the same time, warm the end of the filler rod and dip it into the flux, if dry flux is used.
- When dull red heat is obtained on the tube ends, change the flame to slightly 'oxidising' and moving the tip closer in, deposit a bead of bronze into the bell space around the joint.
  - Avoid overheating the copper or the bronze by taking care to lift the flame momentarily as the bronze deposit 'takes' to the copper, otherwise a poor joint (porous weld) could result if the bronze is allowed to 'burn'.

To make branch joints, the procedure remains the same except that the preparation for the joints is different:

- For a branch using tubes of the same diameter, the tube joints are mitred with a hacksaw, as shown.
- For a branch with tubes of different diameters, the main tube is bored to the same diameter as the smaller tube and the end of this one is filed to fit snugly to the main one, as shown.

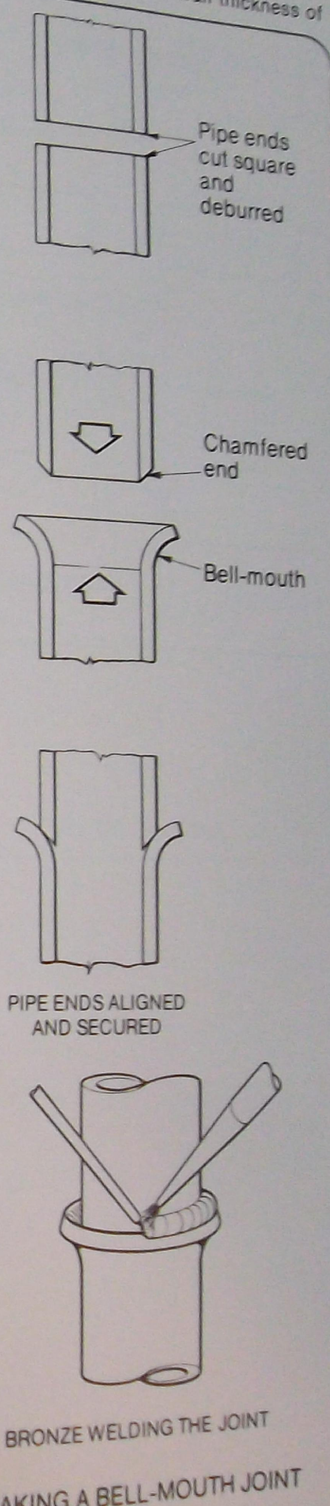

MAKING A BELL-MOUTH JOINT

Branch joints

Branch joints may be prepared either by mitering the tubes by cutting with a hacksaw, as shown or by boring a hole in the main tube having the same diameter as the bore of the branch tube, as shown below and filing the end of the branch tube to fit snugly to it.

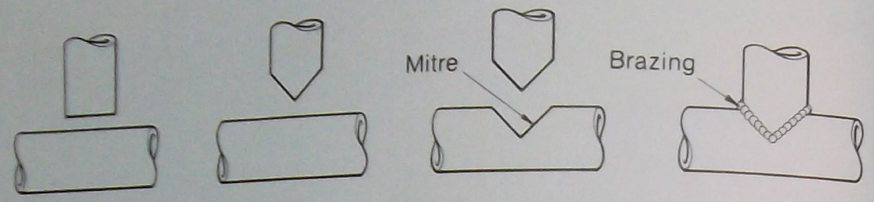

MITRED BRANCH FOR TUBES OF EQUAL DIAMETER

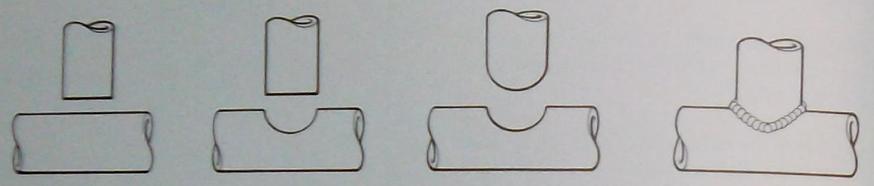

BRANCH IN TUBES OF DIFFERENT DIAMETERS

MAKING BRANCHES

NOTES

- *Crox joints.*

  – Such joints are approved for making joints between copper tubes and male threads of fixtures or fittings.

A special Crox tool is used for fabricating the end of the tube to suit the type of joint to be made.

To make a Crox joint:

- Cut the end of the tube square and deburr both inside and outside of the tube end.
- Anneal the tube end.
- Slip on the flat-seat nut, as shown.
- Place the annealed end of the tube over the tool mandrel and force the sleeve into the body.
- Screw down the pressure screw while rotating the body of the tool.

  – The pressure screw pushes the centre steel ball down, forcing the side balls sideways into the inside wall of the tube so forming a concave ridge into the internal surface of the tube, while at the same time forming a bulge around the outer surface.

- When the Crox is completed, slacken off the pressure screw, then remove the tube from the mandrel.

  – The spring-loaded sleeve will return to its original position and retain the outer steel balls inside the mandrel.

- Make a hemp grommet on the end of the tube, as shown, and complete the joint by screwing the flat-seat nut to the end of the other pipe.

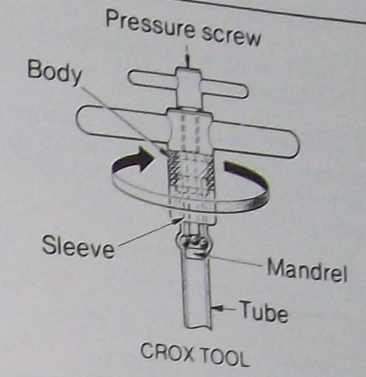

CROX TOOL

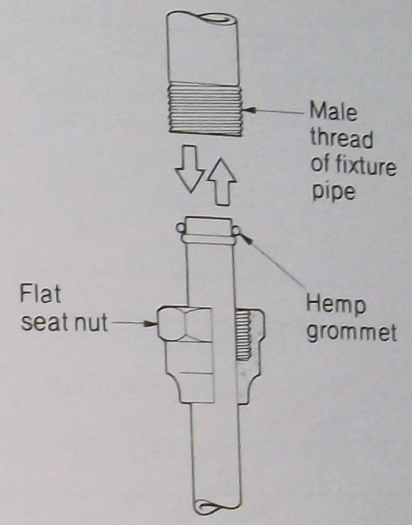

THE CROX JOINT

NOTES

- Friction joints.

  — This type of joint is more suited for use with stainless steel tube. However, it is used in conjunction with copper tube in some States.

These joints are made by slightly squeezing the end of the pipe in the socket of a fitting or against conical-shaped soft copper rings which are compressed into the annular recesses of the fitting by unions on each side when tightened up. These friction joints are only suitable when no strain will be placed on the joint.

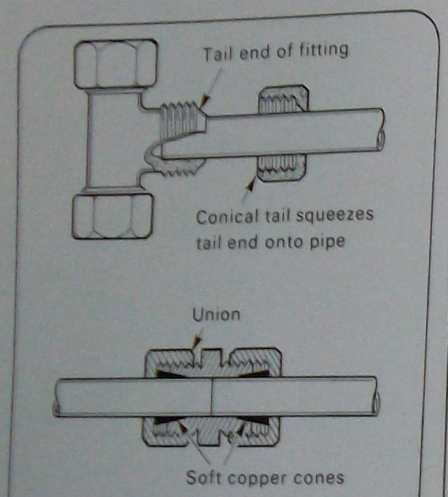

FRICTION JOINTS-COPPER PIPES

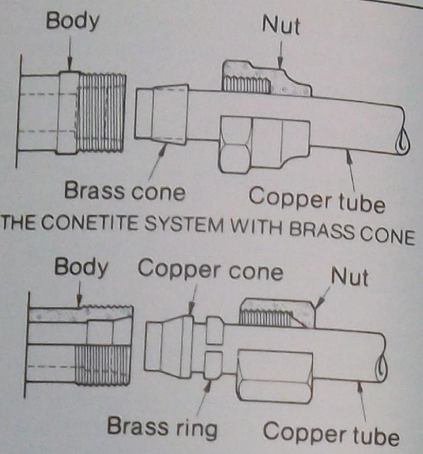

THE CONETITE SYSTEM WITH BRASS CONE

COMPRESSION SYSTEM WITH COPPER CONE AND SPLIT RING

OTHER FRICTION JOINT SYSTEMS

NOTE:

Similar types of fittings, as shown for making compression joints, are available for these types of joints.

8 ASSEMBLING PIPES

After the type of pipe to be used in an installation has been selected, the pipes must be assembled to provide the desired facilities. This involves:

- Measuring the pipes.
- Cutting the pipes.
- Joining the pipes and fittings.

8.1 MEASURING THE WORK

When measuring the work, the plumber rarely has a detailed drawing of the pipe layout to use as a basis for his planning. If he has a drawing, it may for example, only show the layout of the kitchen, laundry and bathroom appliances. The plumber must design his own pipework to service these appliances.

Pipe measurements may be made from several points of reference. (See illustration.)

Whatever points of reference are used, accurate allowances must be made for the depth to which pipe ends are to be inserted into the fittings.

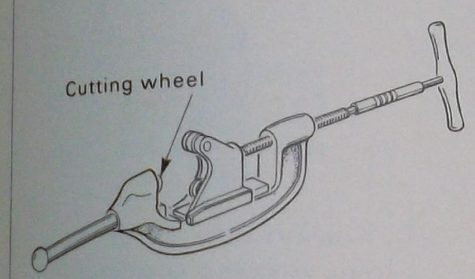

HEAVY-DUTY PIPE CUTTERS

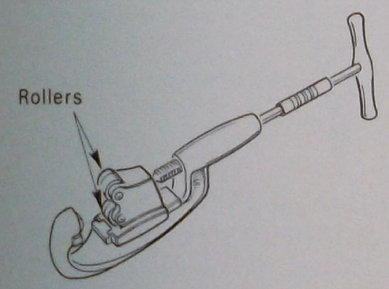

WIDE-ROLL PIPE CUTTERS

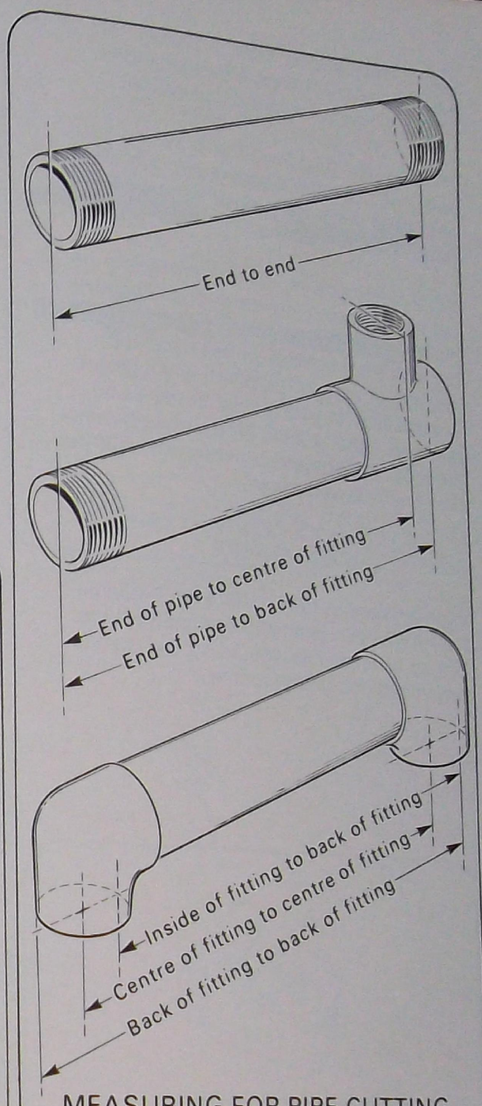

MEASURING FOR PIPE CUTTING

8.2 CUTTING THE PIPES

Pipes may be cut with a hacksaw or pipe cutter. A hacksaw is preferable for small diameter pipes, as it cuts quickly and cleanly.

Some pipe cutters are provided with special wide rollers which reduce external burring of the cut pipe.

The cutting wheels fitted in pipe cutters vary in design. There are basically three designs, as shown in the illustration.

Plastic pipes may be cut with a fine-tooth saw, but to ensure a square cut, a mitre box should be used. Burrs must be removed by filing or sand papering.

VC, asbestos cement and CI pipes may be cut with a chain pipe cutter or an abrasive disc saw. In an emergency, these may be cut with a cold chisel. In this case, the location of the cut is marked and a groove is gradually cut with a cold chisel, using relatively light hammer blows while turning the pipe. The process is continued until the pipe finally breaks cleanly.

8.2.1 Tubing cutters

Various types of tube cutters are available. They have been specially designed for the cutting of tubes and should not be used on galvanised or black iron pipe.

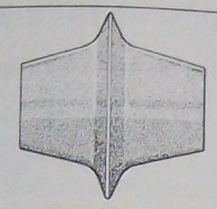

WHEEL FOR CAST IRON PIPE

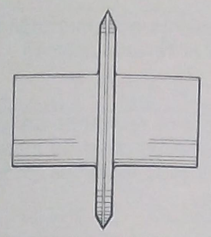

STANDARD THIN WHEEL FOR COPPER AND PLASTIC

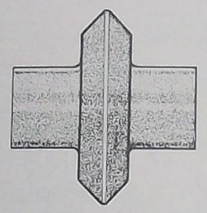

HEAVY DUTY WHEEL

PIPE CUTTER WHEELS



MIDGET CUTTERS

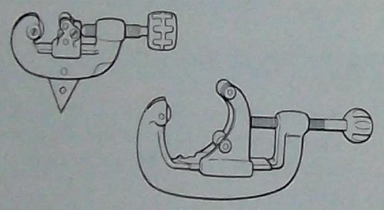

CUTTERS FOR COPPER, BRASS AND ALUMINIUM

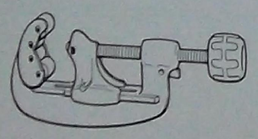

QUICK-ACTING CUTTERS

TUBING CUTTER TYPES

8.2.2 Deburring the pipes

When the pipes have been cut, the burrs must be removed from both edges of the cut. A burr left on the outside of any pipe may foul the mating socket of the next piece of pipe or fitting. A burr left on the inside causes friction when water passes through the pipe. Outside burrs are removed with a file. Inside burrs are removed with a reamer, rat-tail file or rotary burr remover.

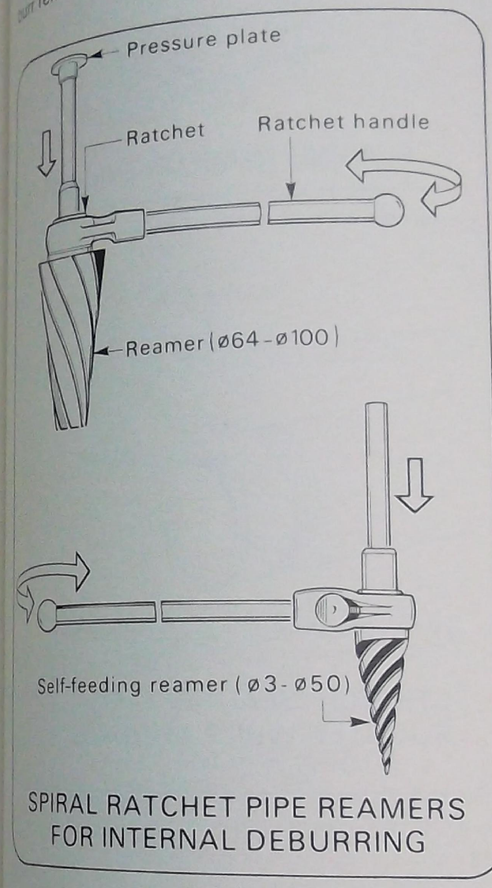

SPIRAL RATCHET PIPE REAMERS FOR INTERNAL DEBURRING

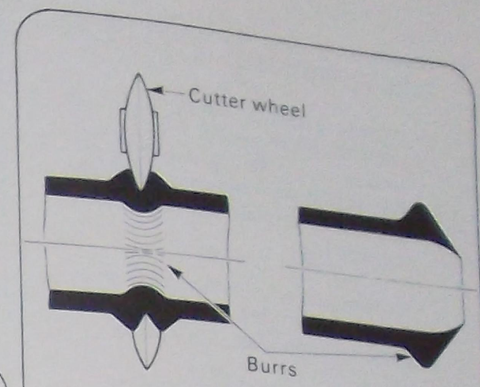

PIPE ENDS BURRED BY CUTTERS

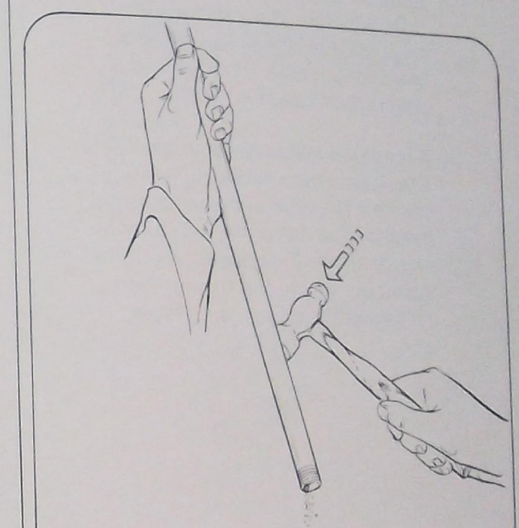

CLEARING BORE AND THREAD

8.3 JOINING GALVANISED PIPES

The following procedure is used to join galvanised pipes together or to fittings:

- Support the pipe in a proper pipe vice and tighten it securely.
- With a thread cutter (stocks and dies), cut male threads on the ends of each pipe to be joined as explained in the manual for 'Hand Tapping and Thread Cutting'.
- Raise each length of pipe and tap it lightly with a hammer or a wrench to clear any foreign matter from the interior.
  - Check that the pipe interior is clean.
- Clean any metal cuttings from the threads.

- Wind sealing material on to the male thread of the pipe end.
  - If hemp is used as a sealing material, unravel it and wrap it around the thread, commencing at the cut end and following the thread in a clockwise direction when facing the pipe end.
  - If sealing tape is used, wind it on in the direction of the thread and stretch it slightly as it is wound.
- Engage the male and female threads and make the first few turns by hand.
- Use pipe wrenches to tighten the threads gradually and evenly.
  - Hold the wrenches close to the joint for maximum torque.
  - Should the pipe thread suddenly tighten before many threads are engaged, the thread has probably crossed. Unscrew the joint and restart the threads correctly.
  - If the thread slips or turns easily for a few turns then suddenly jams, unscrew the joint and examine the threads. If undamaged, carefully re-engage them. If damaged, recut the thread or replace the fitting, then complete the joint in the proper way.

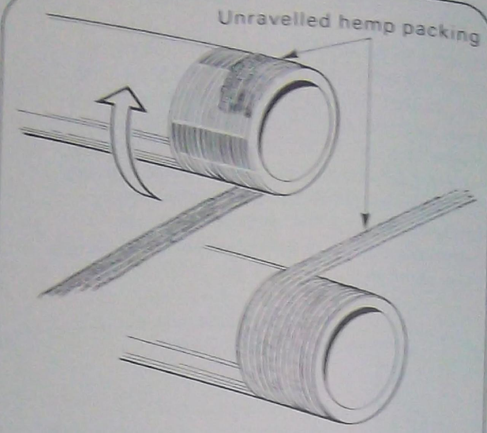

PLACING HEMP ON THREADS

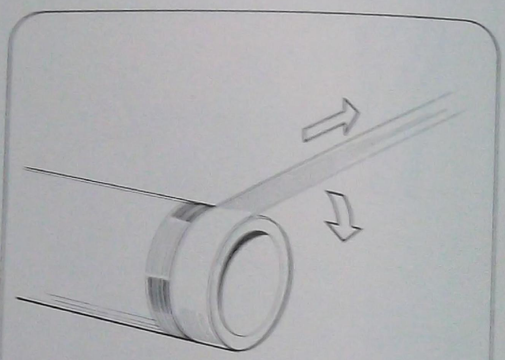

STRETCH SEALING TAPE SLIGHTLY WHILE WINDING

NOTES

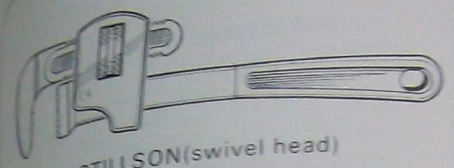

STILLSON(swivel head)

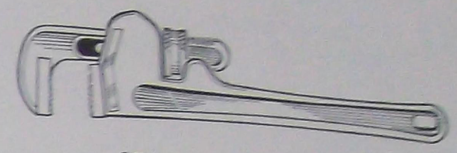

STRAIGHT WRENCH

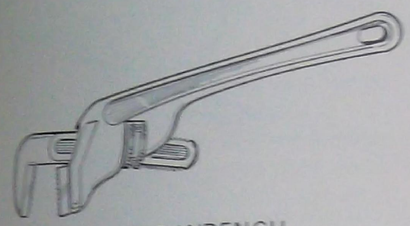

END WRENCH
(For work close to wall or on closely spaced pipes)

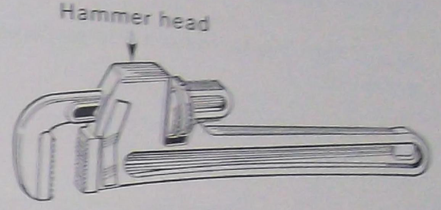

HAMMER WRENCH
(For occasional use as a hammer Has broad jaws)

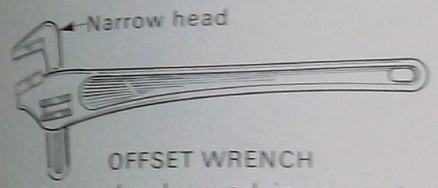

OFFSET WRENCH
(For overhead or work in corners)

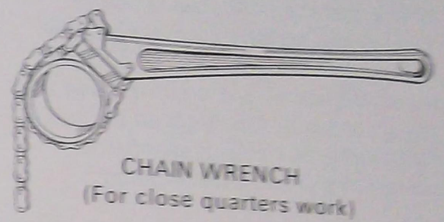

CHAIN WRENCH
(For close quarters work)

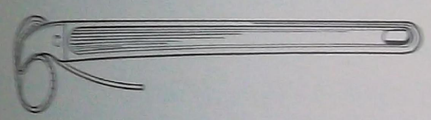

STRAP WRENCH
(Nylon strap for use on thin or plated pipes. Polyurethane-coated strap for UPVC pipes)

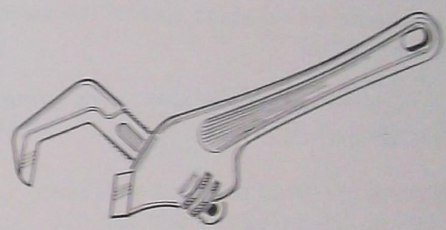

OFFSET HEX WRENCH
(For large nuts in tight corners)

TYPES OF WRENCHES

8.4 JOINING COPPER AND STAINLESS STEEL TUBES

8.4.1 Compression joints (Friction)

Joining copper pipes with a friction joint is done as follows:

- Cut the pipes to the required length and the ends square to the pipe centre line.
- Deburr both inside and outside surfaces at the cut.
- Clean out the inside of the pipes to ensure no foreign matter remains.
- Take a straight union of the correct size for the pipe, remove the nuts and check that each end of the union is provided with a soft copper cone.
- Check that the cones are properly located and replace the nuts loosely.
- Insert the end of one pipe half-way into the union body, then tighten the nut sufficiently by hand or spanner to prevent the union from slipping.
- Insert the other pipe end into the free union end until it abuts against the pipe already fitted.
- Tighten the nut on that side in the same way as the first.
- Holding the union body nut with one spanner, tighten each union cap nut with another spanner in turn until the pipe ends are firmly gripped by the copper cones.

NOTE:

This type of joint is only suitable where no strain is to be put on it. It is used in some States only.

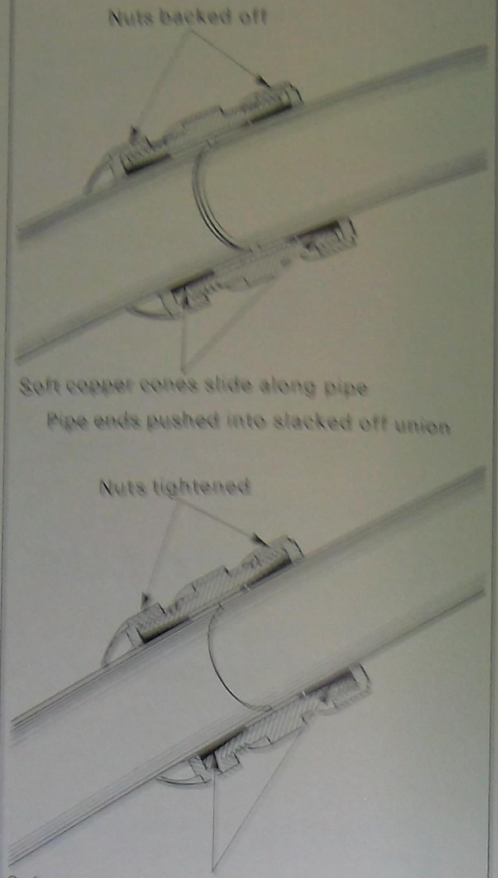

COPPER PIPES JOINED BY FRICTION COMPRESSION JOINT

8.4.2 Compression joints (Flared)

These joints require the use of a flaring tool which is available in a variety of versions. The most commonly used are illustrated.

To join copper pipes with expanded compression joints, proceed as follows:

- Cut the pipes to the required length, ensuring that the cuts are square to the pipe centre line.
- Deburr the pipe ends inside and out.

- Select the correct size union fitting, unscrew the two nuts and slip one on each end of the pipes to be connected.

  – Make sure the threaded parts of each nut will face one another when the pipes are brought together.

- Clamp one of the pipe ends to be flared into the correct size hole of the flaring tool, allowing sufficient pipe material to protrude to cover the bevel of the flaring block.

  – Should the pipe material appear to be 'workhardened' during preliminary operations, it is a good precaution to anneal the pipe ends prior to flaring the avoid splitting of the flare.

  – To have both hands free for flaring when the pipe end to be flared is unsupported, clamp the flaring block or yoke in a vice.

- If a block and drift is used, engage the narrow end of the drift into the pipe end.

- Tap the thick end of the drift with a series of light hammer blows, while turning the drift, until the pipe end is flared into the proper bell shape.

- Repeat this process for the second pipe end.

- Bring the two pipe ends together with the union nuts against the flared edges.

- Insert the copper or brass thimble (olive) provided with the union into the flared edges, line up the threads of the nuts, engage them by hand.

- Using two spanners, tighten the union nuts securely.

NOTE:

Jointing compounds are also used to help seal the joint. The compound is applied between the faces of the joint.

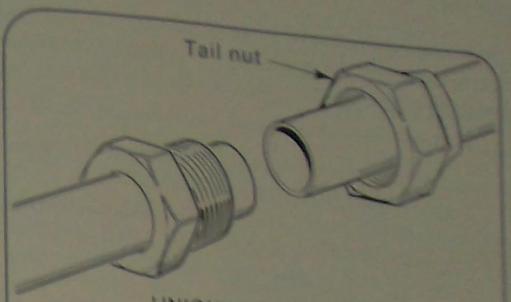

UNION NUTS IN PLACE

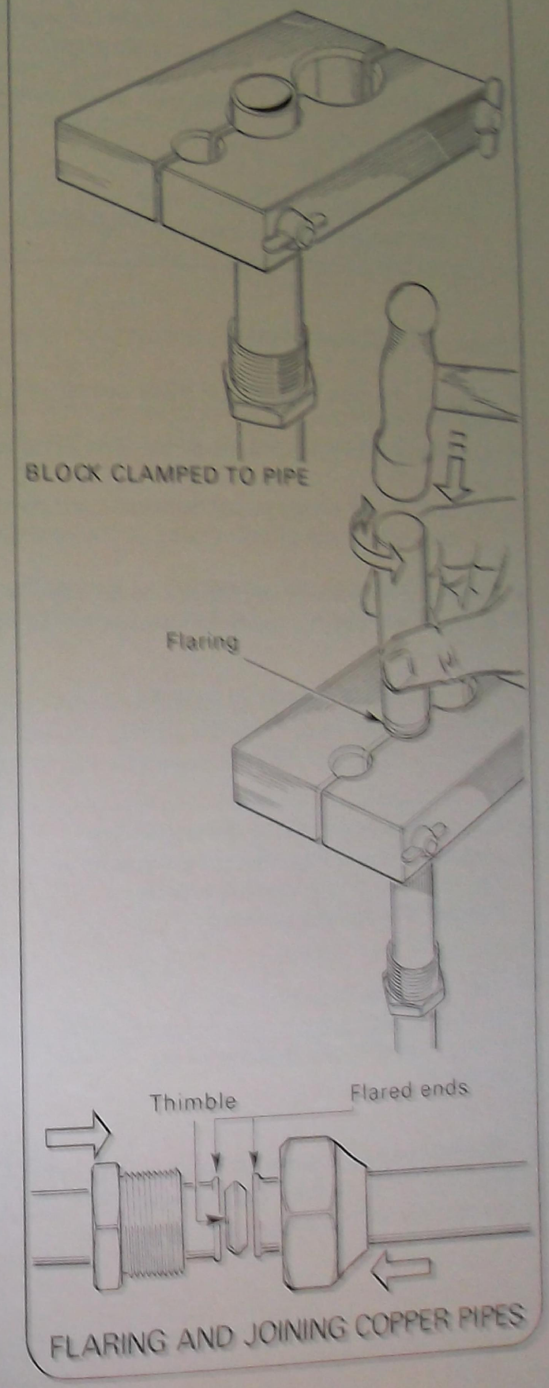

FLARING AND JOINING COPPER PIPES

With the other flaring tools shown in the illustration, the flaring is done by screwing the flaring cone (fitted at the end of the threaded spindle) into the pipe end until the flare is completed.



FLARING TOOL TYPES

8.4.3 Capillary joints

- Prepare the pipe ends as for other operations (deburr).
- Clean the external surfaces of the pipe ends with steel wool or sand paper.
  - — Do not use emery paper because hard particles could lodge into the soft copper material and reduce the effectiveness of the seal and the strength of the joint.
- Clean the sockets of the fittings to be used with steel wool or sand paper if the grease-proof protective wrapping has been damaged or is missing.
- Apply soldering flux to the outside surfaces of the pipe ends and to the inside of the fitting sockets.
- Insert the pipe ends into the respective sockets of the fitting, then slightly twist the pipes to spread the flux evenly between the mating surfaces.
- Heat the assembled joint with a blowlamp or gas torch until rings of solder appear at the mouths of the sockets.
- Remove the heat source, allow the assembly to cool, then wipe off any excess flux with a damp cloth.

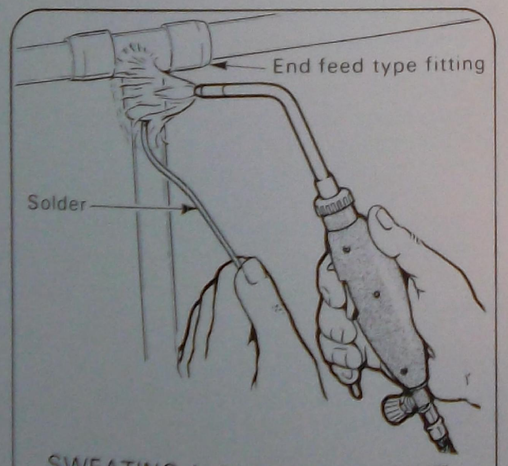

SWEATING A CAPILLARY JOINT

9 LAYING SERVICE PIPES

The service pipe connected to the main ferrule must be of the material specified by the local water authority. Most authorities in Australia specify copper pipes.

Conditions of the soil may need to be considered when choosing the type of service pipe to be installed in the user's property. For example, soil of an acid nature and areas containing ashes have a corrosive effect on metal piping. When subjected to these conditions, metal pipes must be protected against them. This may be done by surrounding them with sand or tarred screenings. Pipes should be laid in the most direct route and with minimum use of fittings to avoid flow friction.

In areas where below-freezing temperatures may occur, pipes must be buried deep enough to prevent the water in them from freezing.

Pipes must also be buried deep enough to protect them from the weight of vehicles. Municipal authorities specify the depths at which pipes must be laid under roads and footpaths and this often dictates the depth at which pipes must be laid in private property.

Under concrete roads, or in areas where future access to the pipe might be difficult, it is good practice to lay the service pipe inside another pipe of larger diameter. The service pipe can then be readily disconnected and withdrawn for repair.

The most usual method of laying the service pipe is to open a trench from the main to the point of entry to the user's property. The pipes are then cut to length, threaded and assembled. The assembled pipes are then laid in the prepared trench, taking care to ensure that no dirt enters the open pipe ends.

When opening the trench, the excavated road metal should be placed clear of excavated topsoil, so that it can eventually be replaced on top of the back-fill.

When opening a trench through a grassed area, the top few centimetres of grassed earth should be cut into sods, stacked on one side of the trench and later relaid on top of the back-fill.

9.1 THE WATER DRILL

In soft or friable soil, it may be possible to use a water drill to cut a hole for pipe laying. A water drill consists of a length of hose with one end attached to a water tap. The other end of the hose is connected to one end of the pipe to be laid.

A brass nozzle is fitted to the other end of the pipe. When the water is turned on, it flows out through the nozzle under pressure, washes away the soil and forms a tunnel for the pipe to be pushed through. An earth auger may also be used to cut a tunnel under narrow paths.

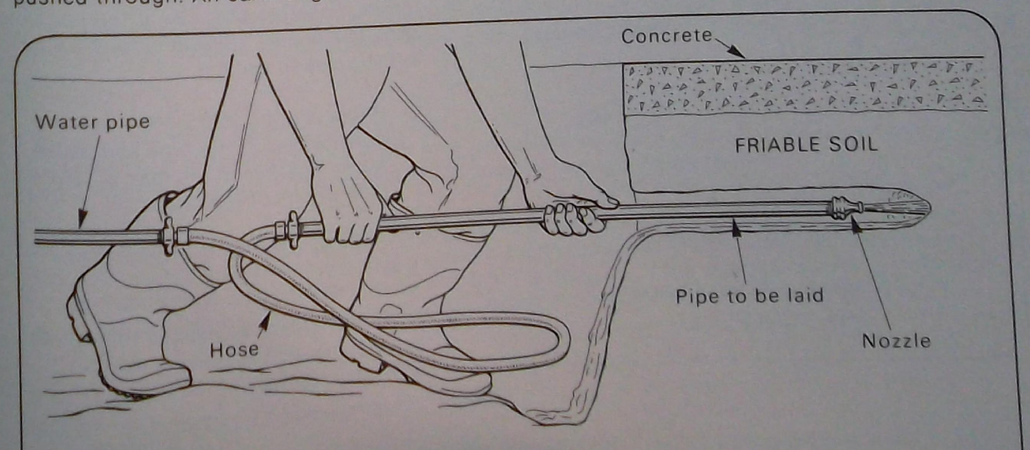

WATER DRILL USED IN FRIABLE SOIL

9.2 CONNECTING THE SERVICE PIPE TO THE MAIN

After the pipes have been laid and connected to the water meter or stop tap at the point of entry into the user's property, the service pipe is connected to the ferrule.

Care must be taken when tightening the coupling to the ferrule as excessive strain may cause a leak around the joint of the ferrule or force the ferrule out of the main. Take the following precautions:

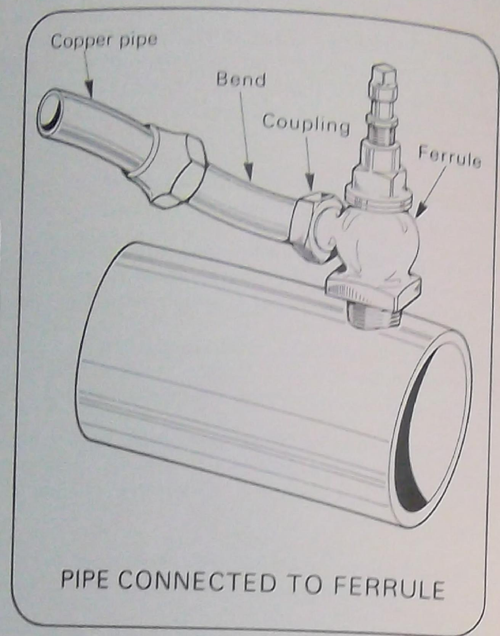

PIPE CONNECTED TO FERRULE

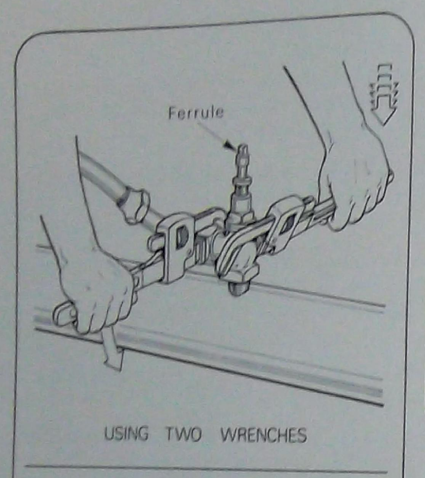

USING TWO WRENCHES



USING ONE WRENCH

TIGHTENING MAIN-SERVICE PIPE COUPLING

- Use two wrenches, one to tighten the coupling, the other to hold the ferrule and so counteract the torque caused by the tightening operation.

  — If you cannot use two wrenches, use your foot to steady the ferrule, as shown.

- Before turning on the water at the ferrule, open the stop tap at the point of entry to the user's property to allow air in the pipes to escape.

  — If this is not done, air will be compressed in the pipe and cause water hammer which may burst the pipe at one of the joints.

- Turn on the water at the ferrule very slowly.

- When the water has passed through the service pipe and is flowing steadily, shut the stop tap.

The pipe trench should not be filled in immediately because it is necessary to inspect the pipe and joints for leaks after remaining under full pressure for a period. Most Water Supply Authorities will insist on inspecting the installation before the trench is back-filled.

When filling-in the trench, the pipe should be well supported by soft earth, rather than by stones. The filling should be consolidated by tamping.

9.3 WATER METERS

Water meters, which are owned, supplied and maintained by the Water Supply Authority, may be fixed on properties to register the quantity of water consumed. Some authorities require a meter to be fixed on every property supplied.

Others require meters to be fixed only when water is to be used for purposes other than normal domestic use. There are two types of meter:

- Inferential meters
- Positive displacement meters

9.3.1 Inferential meters

Inferential meters are used to measure large volumes of water such as for industrial purposes.

A typical inferential water meter has a brass or gunmetal body, partitioned to form an upper and a lower chamber.

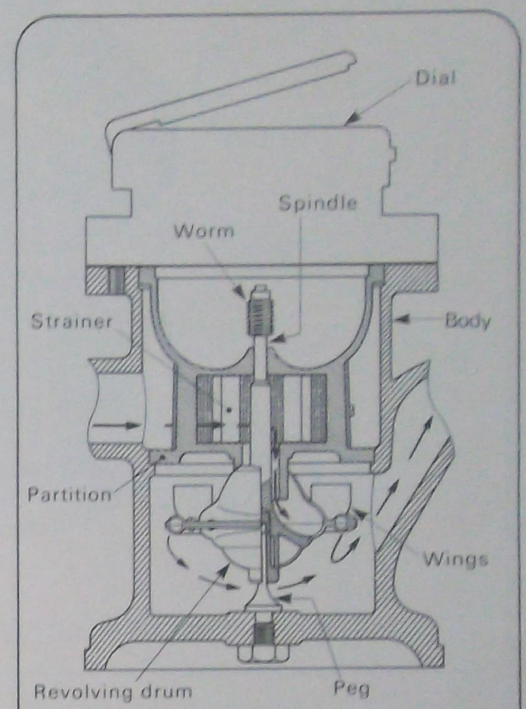

SECTION OF INFERENTIAL WATER METER

Water enters the upper chamber through the inlet, passes through a copper strainer and is then directed through a tube into the interior of a revolving drum in the lower chamber. This tube is formed around the spindle on which the drum is mounted.

The drum is formed of sheet bronze in two pieces, stamped to shape and fastened together to form curved channels which convey water from within the drum to its outside through a series of ports.

The drum turns on a peg at its base. A worm gear is fitted at the top of the spindle which forms the upper part of the drum. The worm gear actuates a series of gear wheels which register, on the dial above, the quantity of water which has passed through the meter.

When water escapes through the series of ports around the drum, the drum is made to revolve. The velocity of the water varies as it passes through the drum. Wings are attached to the outside of the drum to act as stabilisers to ensure that the rotation of the drum is related to the volume of water passing through the meter and is not affected by variations in pressure.

9.3.2 Positive displacement meters

Positive displacement water meters measure the quantity of water passing through them by recording the number of times a container of water of known capacity is filled and emptied. These meters are widely used on domestic water installations.

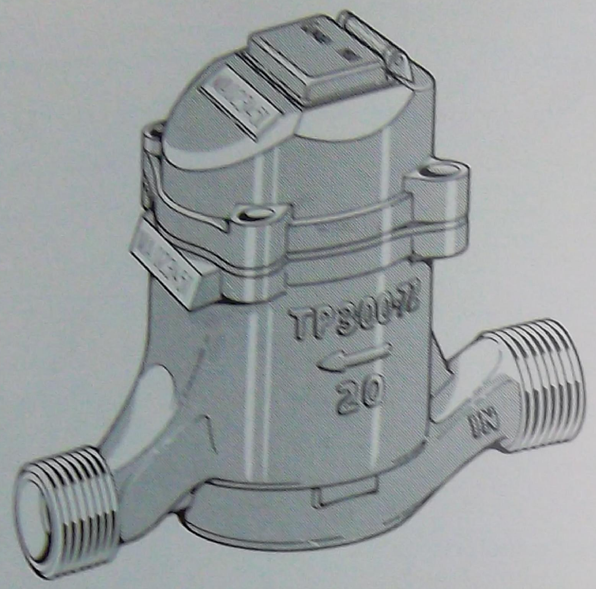

TYPICAL POSITIVE DISPLACEMENT METER

Its internal details and operation are illustrated on next page.

A typical positive displacement water meter comprises a piston rotating with a displacement chamber in the meter body. Water enters the meter and passes through a strainer and inlet port into the chamber, where it fills and drives the piston around a central hub until the piston reaches the outlet port in the top of the working chamber.

Water is delivered from the meter in a series of small rapid impulses. The meter chamber has a division piece which guides the piston in its rotation so that the only connection between the inlet and outlet ports is through the piston. The water is admitted to the piston through a number of small holes in the bottom and recesses on its sides.

The piston oscillates around the centre hub. While the chamber is filling on one side, the piston is delivering water on the other.

The piston rotations are recorded on a dial through mechanical gearing or through a magnetic drive as shown in the illustration.

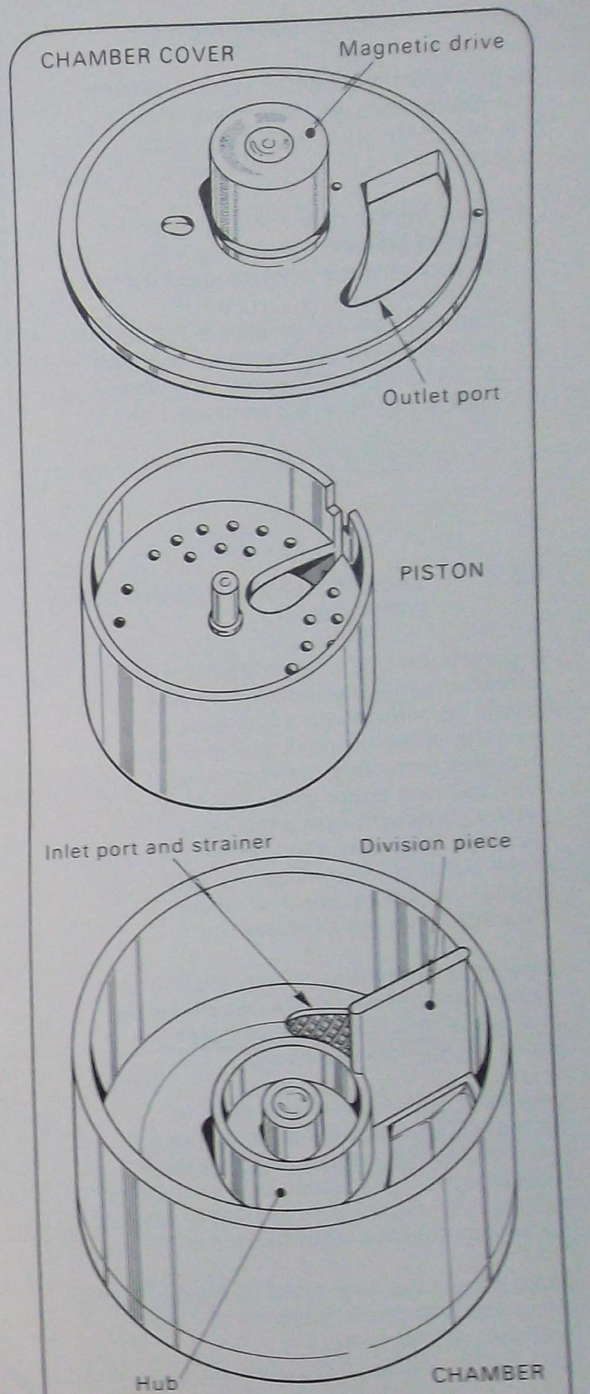

WORKING PARTS OF POSITIVE DISPLACEMENT WATER METER

9.3.3 Reading water meters

Water meters register the amount of water that passes through them in kilolitres (kl). The dial of the water meter is read as follows:

- Black figures on the left of the arrow marked below the dial, show the amount of water consumed in kilolitres.
- Red numbers on the right of the arrow marked below the dial, show decimals of a kilolitre and are used only when testing the meter for accuracy.

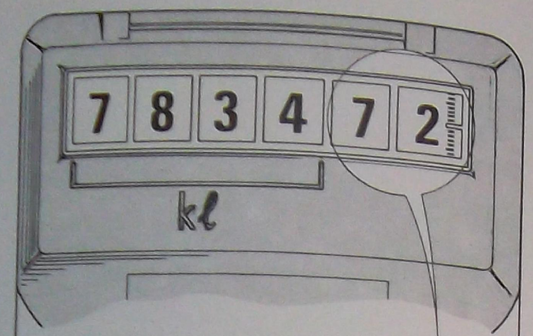

READING : 7834.72 KILOLITRES

9.3.4 Location and installation of water meters

In general, the meter should be in a protected but easily accessible place. It should be mounted on a firm base if the diameter of the bends is 15 mm or more, level, and preferably, above ground. If it must be fitted below ground level, a properly drained meter pit must be installed. The meter must be installed close to the building line and the precise location, as well as the manner of installation, are usually specified.

Most local authorities specify the use of copper pipe connections to water meters and that all joints must be compression joints for easy disconnecting.

When the use of galvanised pipes is permitted, four long radius bends are required. Upright sections of pipe are placed between the upper and lower bends so that they may be sprung slightly apart, if necessary, to disconnect the meter.

Large meters are connected by flanged joints and feature a strainer or 'dirt box' upstream of the meter.

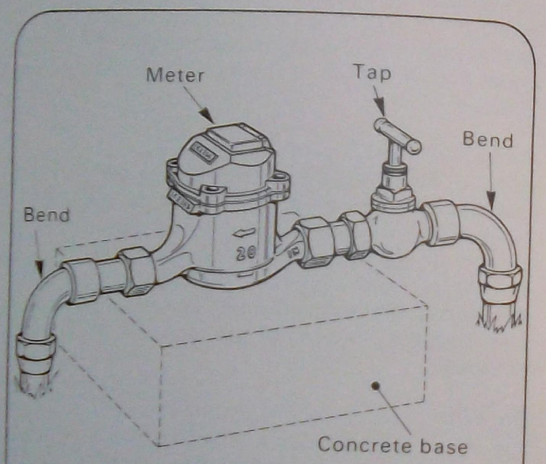

Meter must be mounted level-Base usually required for pipes of 75mm or more-Stop tap may be next to meter or further upstream

Well-drained pit if below ground-Stop tap may be in box

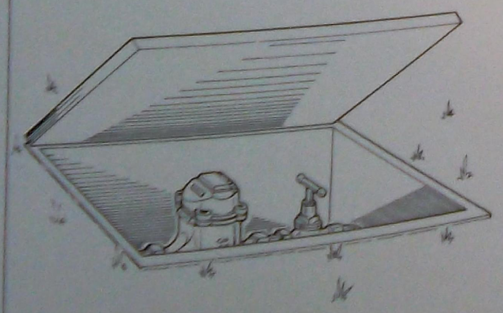

METER MOUNTING

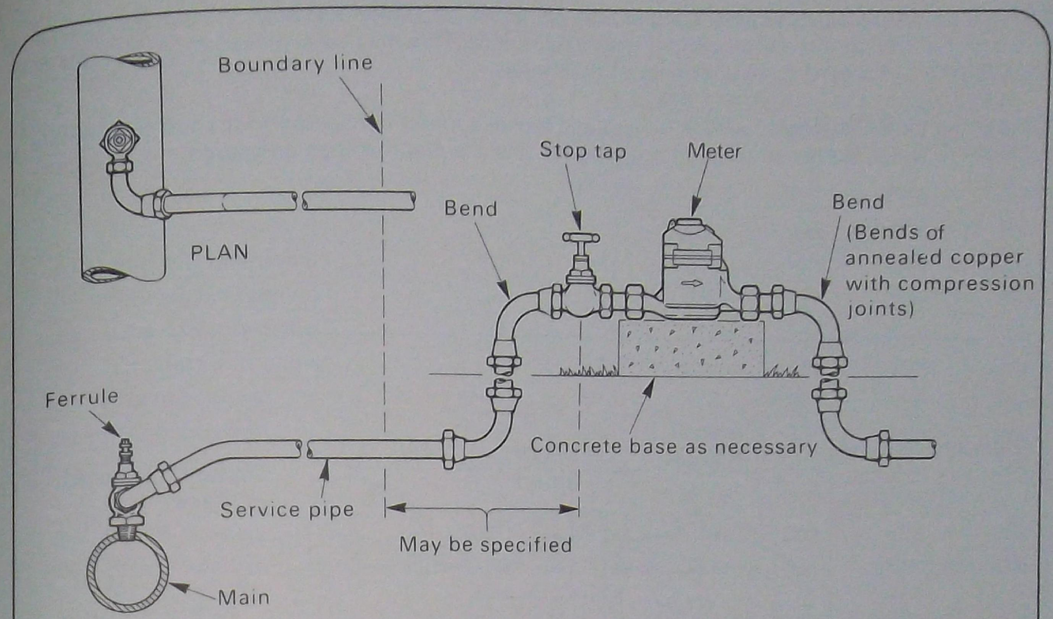

TYPICAL SERVICE CONNECTION

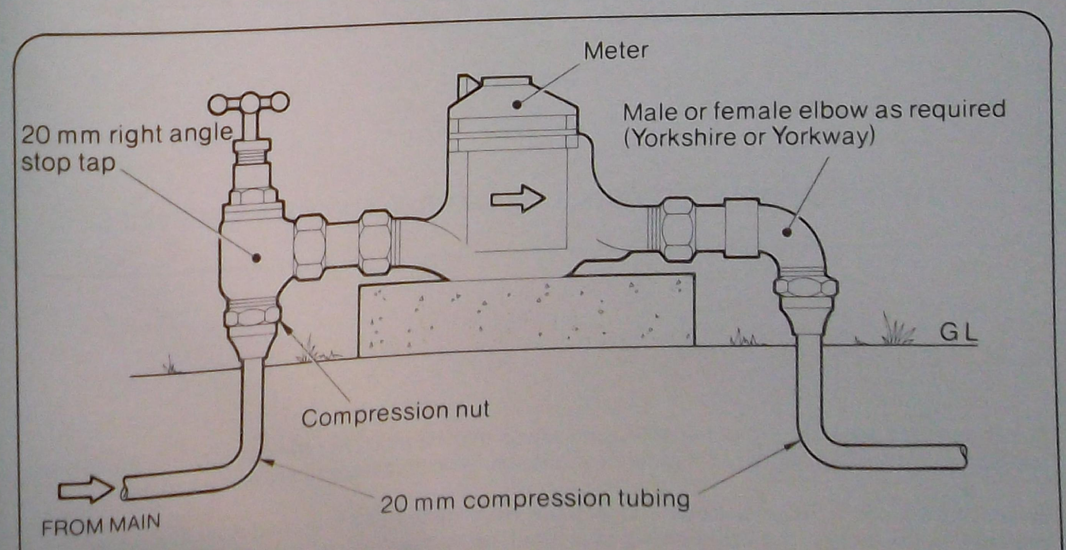

APPROVED METHOD OF FIXING A 20 mm RIGHT ANGLE STOP TAP

Water supply authorities usually specify that, for pipes of 50 mm diameter or more, provision must be made for testing the meter without disconnecting it. This may be achieved by installing a stop cock ferrule and a gate valve upstream of the meter.

To test the meter, the gate valve is closed and a check meter connected to the top cock ferrule. A quantity of water is passed through both meters and the dial readings compared.

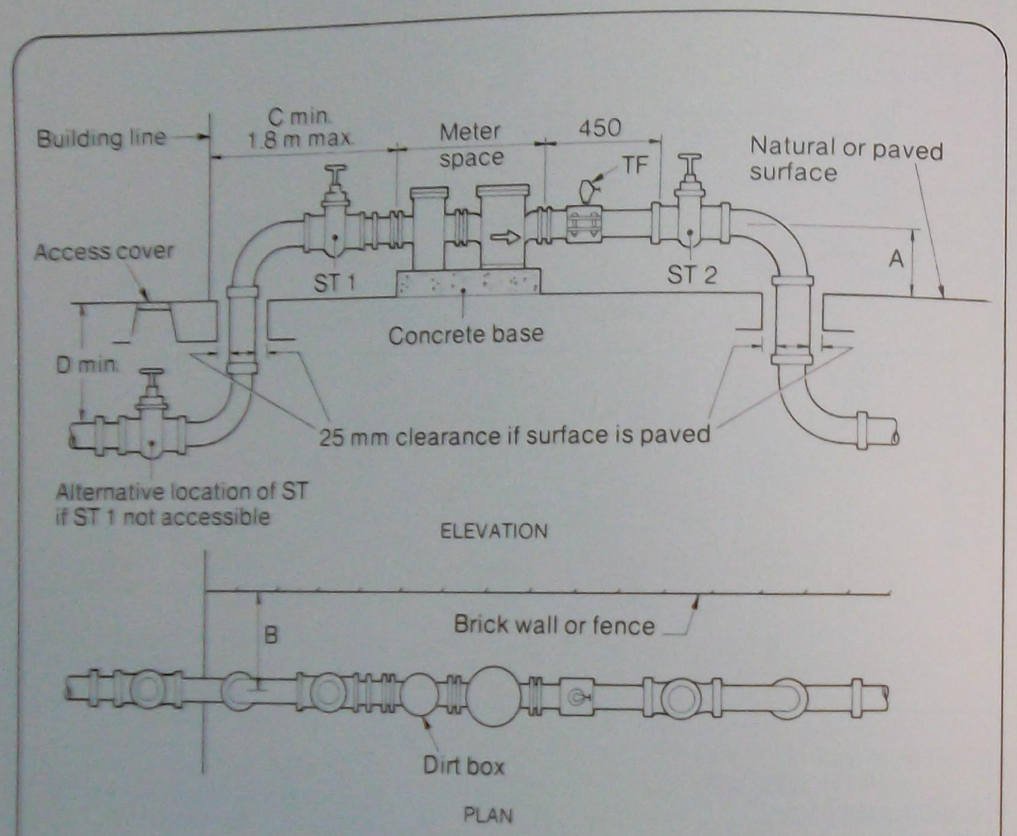

TYPICAL LARGE METER INSTALLATION FOR 80 AND 100 mm SERVICES

If 100 mm stop taps are not obtainable, gate valves may be used, but the connections must then include a reflux valve similar to the connections for 150 mm meters to prevent backflow.

Where the 80 mm or 100 mm meter connections are installed below ground level in a pit as provided in the by-law, the connections must conform to the illustration including the inlet and outlet bends and risers.

For dimensions A, B, C and D, refer to next Table.

TABLE FOR METER SPACES AND CONNECTION DIMENSIONS FOR 50, 80 AND 100 mm METERS

SIZE (mm)	TYPE		DAVIES SHEPHARD MANUFACTURE				
			METER SPACE (mm)	A (mm)	B (mm)	C (mm)	D (mm)
50	Full-way inferential	E-F	533	254	381	686	762
80	Full-way inferential	F-F	692	330	381	686	762
100	Full-way inferential	G-F	787	356	457	838	838
80	Ordinary inferential	F	578	254	381	686	762
100	Ordinary inferential	G	673	279	457	838	838
50	Trade positive	D-FP	572	178	381	686	762
80	Trade positive	F-FP	800	229	381	686	762
100	Trade positive	G-FP	940	229	457	838	838
			EMAIL MANUFACTURE				
50	Trade positive	E-FP	575	178	381	686	762
80	Trade positive	F-FP	787	229	381	686	762

NOTES

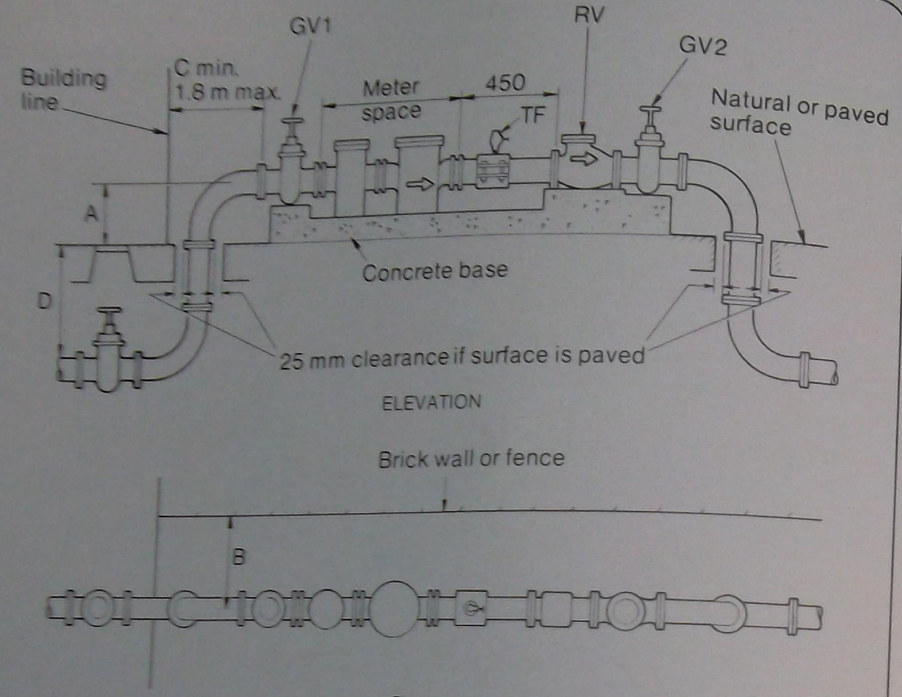

LARGE METER INSTALLATION FOR 150 mm SERVICE

Where 150 mm meter connections are installed below ground level in a pit, as provided in the by-law, the connections must conform to the illustration below, including the inlet and outlet bends and riser.

The next Table refers to dimensions A, B, C and D related to 150 mm meter set-up.

TABLE FOR METER SPACES AND CONNECTION DIMENSIONS FOR 150 mm METERS

SIZE (mm)	TYPE		MADE BY DAVIES SHEPHARD METER SPACE (mm)	A (mm)	B (mm)	C (mm)	D (mm)
150	Full-way inferential	H-F	1100	483	600	1200	900
150	Ordinary inferential	H	845	356	600	1200	900

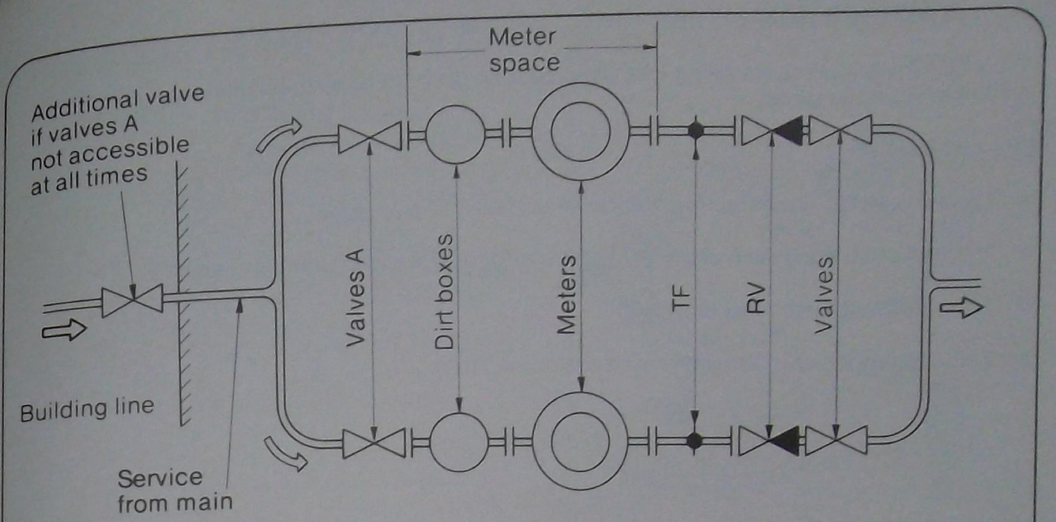

TWIN METERS — SINGLE SERVICE INSTALLATION

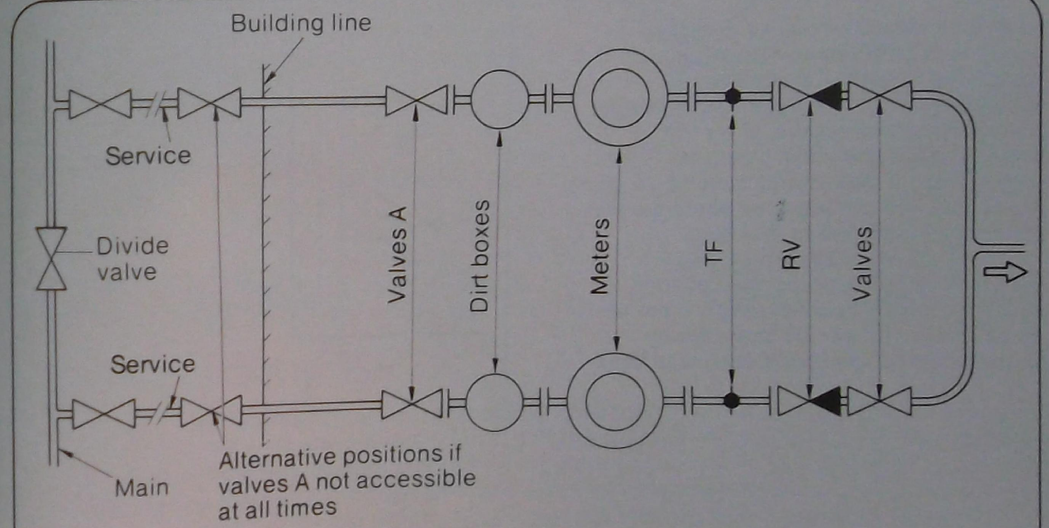

TWIN METERS — DUAL SERVICES INSTALLATION

The meter connections shown may be fixed above ground as detailed in previous illustrations or may be housed below ground level in a properly constructed and drained brick or concrete pit.

10 DISTRIBUTION PIPES

When distribution pipes are being laid, care must be taken to ensure the minimum water friction is obtained inside the pipes.

This involves:

- Careful reaming and deburring of internal surfaces of pipe ends.
- The use of fittings which cause the least friction, e.g. bends rather than elbows.
- A minimum of directional changes.
- Selection of the shortest possible route for the pipes.

10.1 PLANNING FOR FUTURE WORK

Stop taps should be placed in easily accessible locations so that sections of the distribution pipe installation can be isolated by shutting off the supply to such sections needing repairs, or for the installation of additional piping for extensions. In multi-storey buildings a stop tap is required at each floor where the riser is tapped for service to that floor.

Plugs should also be installed at such locations where future extensions are likely to be made. This avoids unnecessary cutting of pipes and additional work later.

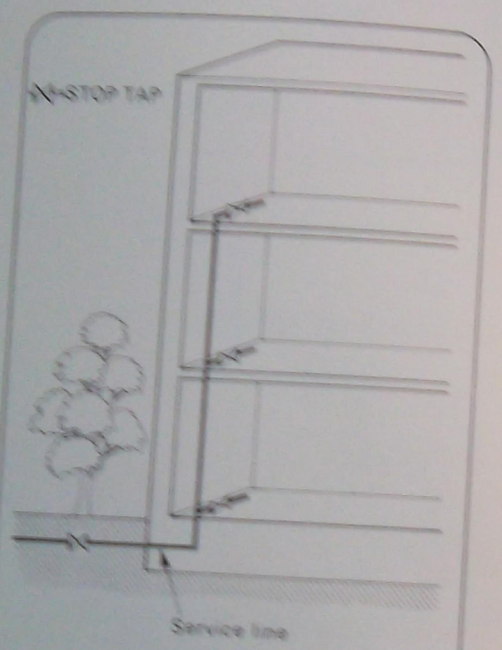

STOP TAP ON EACH FLOOR IN MULTI-STOREY BUILDINGS

10.2 TESTING THE INSTALLATION

Small installations are usually tested as a whole, after connection to the main. Large installations are installed and tested in sections. Pipe ends are closed off by plugs or blind flanges and the section or sections laid, are tested for leaks under full water pressure. At the completion of the test, any leaks are rectified and the test repeated until the installation is satisfactory for the section under construction. At the completion of the test, the water is turned off, the water drained from the pipes by removal of plugs or flanges and the next section is laid when the testing process is repeated once more until the whole installation has been subjected to the necessary testing and approved by the appropriate authority.

10.3 LAYING THE DISTRIBUTION PIPES

Pipes that are laid outdoors are buried for their protection against physical damage. Within buildings, pipes are laid above ground level for easy access when repairs or alterations to the piping become necessary. In some types of buildings, pipes may be installed in recesses or ducts. Such installations must be in accordance with local regulations. Certain regulations also exist for conditions when pipes must traverse walls or floors (See: 'Sanitary Plumbing 4' Section 6). External walls, pierced to allow the passage of pipes, must be plugged with mortar around the pipes and internal wall holes in wall cladding around pipes, masked by suitable cover plates or flanges.

Pipes laid externally underground are sufficiently secured by the earth tamped around them, but pipes installed above ground must be firmly secured to walls or structures. A wide range of clips is available for this purpose, chrome plated clips of various shapes and designs being available for securing plated pipes installed exposed to internal walls. (For masonry type of clips, see 'Sanitary Plumbing 3'.

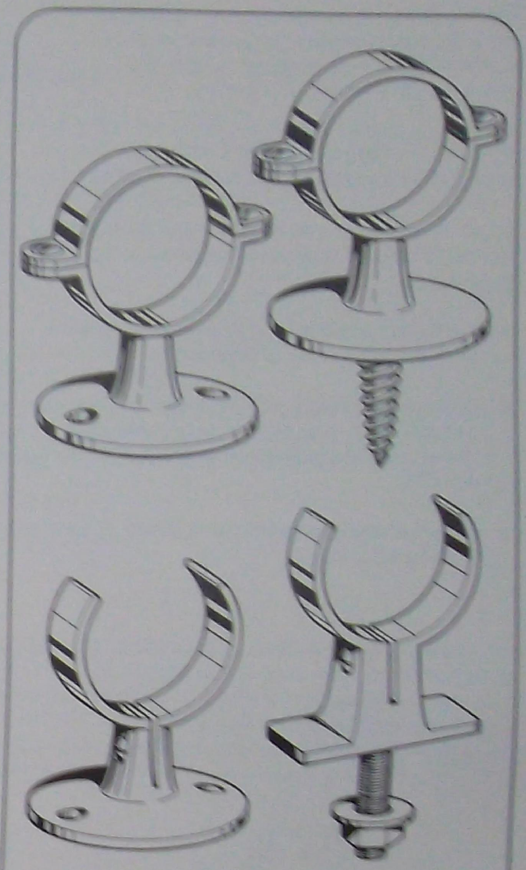

PIPE SUPPORTING CLIPS FOR EXPOSED PLATED PIPES

10.4 CONNECTING THE SUPPLY TO FIXTURES

General

The supply of water to fixtures must be carried out according to strict regulations. These apply whether such fixtures are connected directly to the supply or indirectly through storage tanks or flushing of any fixture, storage tank or flushing device cannot flow back into the supply pipes. If backflow was possible through a pipe installation, a 'cross connection' would exist and this must always be prevented. No connection may be made to fixtures, or service pipes laid, unless the Authority's permission is given.

This is done by providing an air gap of at least 20 mm between the lowest level of water inlet and the highest part of the overflow pipe or rim of a fixture.

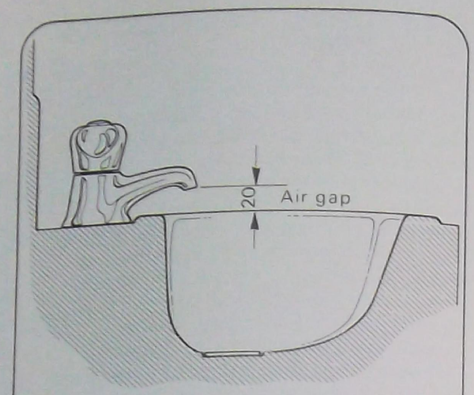

AIR GAP OVER SINKS AND BASINS

10.4.1 Requirements for tap installation

Apart from the air gap requirement between tap outlet and fixture overflow level, a tap must be:

- Easily accessible by a person to operate it, whatever fixture it may serve.
- So installed that it can be used conveniently, e.g. high enough over sink bowls, to allow adequate space for working.
- Installed over disconnector gullies or yard gullies in such a way that pipe joints cannot be loosened by loads.

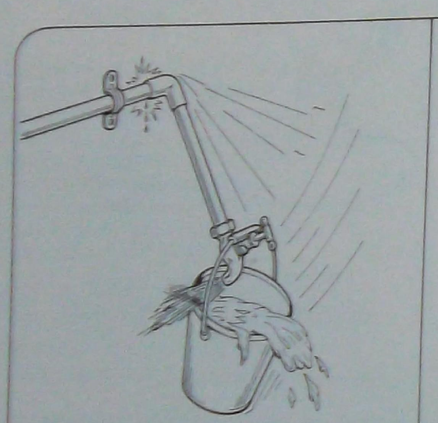
Unsupported tap swings down under weight – Screw joint leaks

INCORRECT

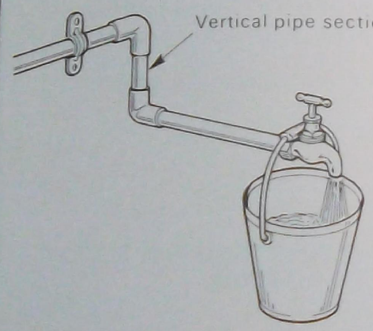

Tap braced by vertical pipe section, joints will not loosen

CORRECT

NOTE:

Final connection from service pipe to fixture is by means of a length of annealed copper pipe (usually plated) and with compression joints, e.g. to cistern, HWS, basins, etc.

10.4.2 Requirements for fixtures

The pipework to supply water to any fixture or flushing device must be of a size allowing the delivery of at least 5-10 litres per minute. (Usually specified by Water Supply Authorities.)

10.4.3 Storage tanks

Storage tanks are used to serve the following purposes:

- To provide a supply of water that is physically disconnected from the mains supply.
- To store and distribute water in buildings at a level higher than that which the supply authority provides through its mains.
- To provide a reserve of water.

Physically disconnected supply from tanks

This system must be installed to supply water to flush valves, the storage tank supplying no other fixtures than those. If it is desired to supply water to other fixtures or services, a second tank or a cistern supplied from the first one must be installed, the supply to flush valves remaining disconnected from the service pipe supply.

High-level tanks

There are cases where the pressure of supply water is not sufficient to reach beyond a height that would ensure satisfactory operation of fixtures that may be installed in upper storeys of buildings. In such cases, the supply authority may approve the installation of booster pumps to ensure adequate supplies to outlets located above the 15 metre level. Where no approval for the use of such pumps has been given, outlets at the 15 metre or higher levels are to be supplied from a high-level storage tank of sufficient capacity to serve the number of outlets required.

Construction

Storage tanks may be constructed from a variety of approved materials, but the most widely used are:—

- Copper sheet, not less than 0.55 mm thick.
- Copper alloy sheet, not less than 0.55 mm thick.
- Galvanised steel sheet not less than 0.79 mm thick.
  - — As galvanised tanks may need replacing, provision must be made for such an event during construction of building structures.

Every storage tank must have:

- a close-fitting cover;
- an overflow;
- a safe tray;
- watertight joints.

The overflow is constructed in such a way that when the control valve discharges into the tank at full capacity under a pressure of 686 kPa (70 metres of head) and all outlets serviced by that tank are closed, the air gaps listed in the Table page 126 are maintained between the static water level in the tank and the outlet of the control valve.

ORIFICE OF FLOAT VALVE (mm)	MINIMUM AIR GAP (mm)
10	20
15	40
20	60
25	75
More than 25	3 times outlet size (Max: 150 mm)

Unless special arrangements have been made for drainage, a safe tray must be provided which complies with the following:

- it must extend 75 mm (minimum) beyond any part of the storage tank;
- it must have a turned-up edge of at least 50 mm;
- it must be made of 0.60 mm commercial grade galvanised steel sheet or better;
- it must have an overflow pipe of at least 40 mm diameter, supported close to the heater or tank, then at every 2 m. Its seams must be uppermost and its watertight joints lapped in the direction of flow.

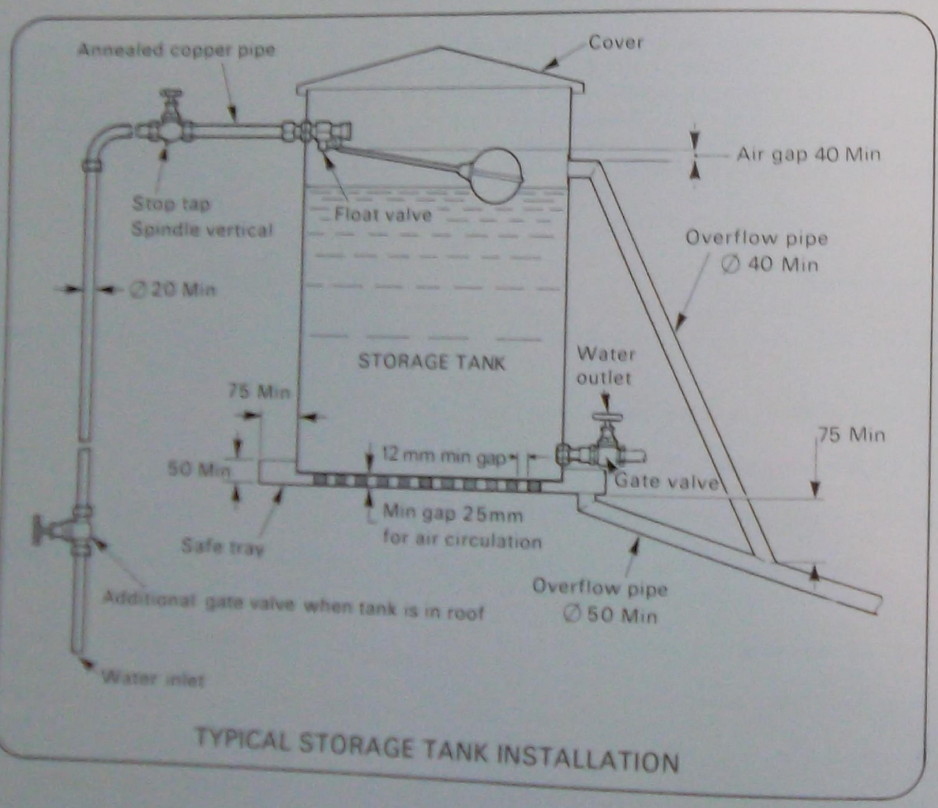

TYPICAL STORAGE TANK INSTALLATION

Tank installation

The following requirements apply for the installation of storage tanks:

- A supporting platform of hardwood, at least 25 mm thick, or other durable material with its planks not more than 25 mm apart, supported by adequate bearers, not more than 450 mm centre to centre or closer.
- The base of the tank must not rest on the safe tray, but be supported at least 25 mm above its surface for allowing air to circulate between the two.
- Storage tank and safe tray overflows must discharge to where they cannot cause damage or nuisance.
- The vertical distance from a storage tank outlet to any flush valve or cistern outlet, must be at least 3 metres.
- Tank capacity must be not less than 50 litres for each flush valve served when measured above the invert of the outlet pipe to 20 mm below the overflow level.
- The supply pipe to a storage tank must be 20 mm or larger to maintain an adequate supply to all fixtures served by the tank.
- If the storage tank capacity is more than 50 litres, a control valve must be installed to the outlet, close to the tank, and in an accessible position.
- The installation must usually be approved by the Supply Authority.

10.4.4 Supply from tanks to cisterns and flush valves

In general, the requirements listed below apply, with possible variations between localities.

Storage tanks to cisterns

Water supply to cisterns is controlled by float valves as follows:

- Where the vertical distance between the tank's full water-level and the cistern inlet is below 6 metres, a low pressure float valve delivering at least 7 litres per minute at 30 kPa is used (30 kPa = 3 m head).
- In all other cases, a high-pressure float valve or a universal control valve must be fitted. The valve so installed, must have the capacity to deliver 12 litres per minute at a pressure of 550 kPa (about 55 m head).

Regulations also lay down the size of the pipes to be installed between tank and cistern. Where only cisterns are to be served, the size of pipes to be installed is determined by the number of cisterns served, according to the table page 128.

The use of galvanised steel pipes is not permitted for this.

When other fixtures, apart from cisterns, have to be supplied through the same pipes, a plan of the proposed installation has to be submitted to the Supply Authority for approval.

TABLE OF SERVICE PIPE SIZES TANKS & CISTERNS

SERVICE PIPE DIAMETER (mm)	MAXIMUM NUMBER OF CISTERNS
20	3
25	10
32	30
40	50
50	100

Storage tanks to flush valves

Regulations also determine the permissible water heads under which flush valves are to operate and this is usually between 3-30 metres (30-294 kPa). Special arrangements for pressure regulations are required when higher pressures in the pipe system would be likely to occur, e.g. breaker tank or pressure ratio valves.

As for the supply of water to cisterns, the pipe sizes to be used are laid down for the number of flush valves to be supplied; the use of galvanised steel pipes is banned here too. The size of delivery pipes is reduced when a change in size is necessary and then progressing downwards from the storage tank level.

HEAD AVAILABLE (m) OR PRESSURE (kPa) MINIMUM	SERVICE PIPE DIAMETER (mm)	FLUSH VALVES ON SAME FLOOR AND LOWER
3(30)*	40	2
	50	15
	65	50
	80	150
6(60)	40	3
	50	30
	65	150
	80	200
9(90)	40	4
	50	50
	65	200
12(120)	40	6
	50	100
	65	250

*Figures in brackets represent pressures in kPa.

Detailed installation plans must be supplied to the authority for water supply if the number of flush valves to be served exceeds that listed in the table.

10.4.5 Sedimentation and stagnation in tanks

Sedimentation is the settling of particles of dirt and foreign matter to the bottom of storage tanks. Dirt should be allowed to settle in the tank instead of being released into the delivery pipe. The inlet level of the outlet pipe should be mounted a little higher than the tank bottom surface to allow for this.

Also, the supply valve outlet and the outlet pipe inlet should not be in line or close together because such an arrangement would allow:

- direct flow from supply to outlet, allowing the bulk of water stored to remain stagnant;
- stagnant water to be supplied to fixtures in cases when the normal supply would fail, or be interrupted for a while.

In some cases, it is necessary to interconnect several tanks in series. The same principles apply here to overcome those problems. The water is made to traverse the tanks before discharging through the outlet, as shown.

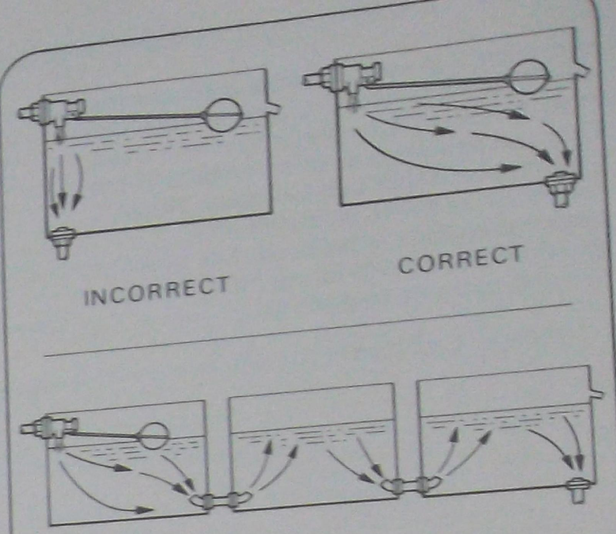

POSITION OF OUTLETS FROM STORAGE TANKS

11 COLLECTION OF ROOF-WATER

In rural districts, many households depend upon the rain-water collected from the house roof and stored in tanks. As the roof and its gutters are frequently fouled with dust and other impurities, rain will wash these into the tank. To overcome this, a filter can be fitted between the roof and the inlet to the tank. The roof catchment area should not be made of lead, or painted with lead-based paints, because 'soft' water dissolves lead which could then find its way into the water supply.

11.1 STORAGE OF RAIN-WATER

Rain-water tanks may be located above or below ground level. Where the only source of water supply is water collected from the roof, the tank capacity should be equal to about 90 days normal usage. For calculation for the size of tank required, allow 90-100 litres per day per person for all domestic purposes.

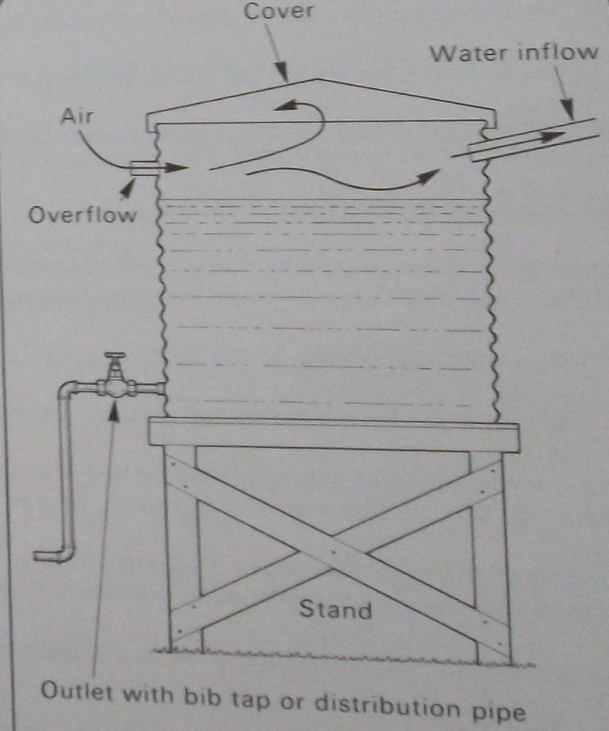

TYPICAL RAIN-WATER TANK INSTALLATION

11.1.1 Above ground tanks

Above ground tanks may be made from a variety of materials. Corrugated galvanised steel tanks are the most commonly used. They are usually placed on a stand in the coolest place that can be found. Water, kept cool, remains palatable and evaporation loss is reduced. The tank should have a close-fitting lid to keep out dirt and airborne impurities.

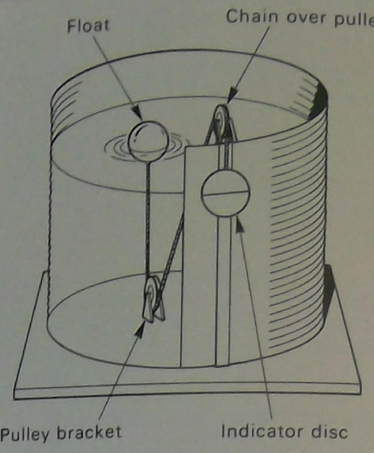

WATER LEVEL INDICATOR ON TANK

To prevent pollution, the storage tank overflow should not be connected directly with a closed drain. Water is drawn from the tank either:

- directly from a bib tap fitted a short distance above the bottom of the tank; or
- by a distribution pipe or pipes connected to outlets throughout the house.
  - — In this case a stop tap must be fitted at the tank outlet.

A level indicator may be fitted to a storage tank, as shown.

11.1.2 Underground tanks

Underground tanks may be made from concrete, stone or brickwork. The inner and outer surfaces of the walls and floors of tanks must be sealed against the passage of water to prevent both:

- water leaking out of the tank;
- pollution by contaminated subsoil water entering the tank.

The internal walls of the floor may be waterproofed by cement rendering or by suitable plastic sheeting. The outside wall and base may be set in puddled clay.

The top of the tank must have a strong cover, fitted with an inspection opening, and must be located well above ground level to prevent run off water entry.

The water from the tank is pumped to elevated tanks and delivery to the outlets is then by gravity.

NOTE:

For further information on these types of tanks, refer to Basic Training Manual '12-5 Roof Plumbing'.

REVISION QUESTIONS

1. a Why is it not possible to make sharp bends in galvanised steel pipes?
   b What is a long screw and where is it used?
   c Describe its installation sequence.
2. What is 'annealing' of copper? Describe how this is done.
3. a List some of the advantages of using PE pipes.
   b What should a plumber do before modifying an existing metallic water supply pipework with polyethylene?
   c What are the restrictions on the use of PE pressure pipe in water supply installations?
   d What are the main differences between the imperial and metric PE pipework?
4. a What kind of tools are used to cut pipes?
   b Why is it necessary to deburr pipes before joining and how can this be done?
5. a Describe the procedure for joining copper pipes with:
   - Friction joints
   - Expanded joints
   - Capillary joints.
6. Why is cutting with a hacksaw preferable to cutting with pipe cutters?
7. What reasons could there be for insisting that a mitre box be used when cutting UPVC pipes with a saw?
8. Explain with the aid of a fully labelled neat drawing, how a domestic meter assembly is installed from water main to garden hose tap.
9. Show by means of a fully labelled drawing, a typical storage tank installation.
10. Explain with the aid of a fully labelled diagram, how the Authority would tap a water main under pressure and the operation of the tapping machine.
11. Explain what is a combined fire and domestic water service.
12. Explain with the aid of a neatly drawn and labelled drawing, what a trident service is.

NOTES FOR THE INSTRUCTOR

In these Training Manuals the term 'instructor' refers to any person who may train or be directly responsible for training individuals.

For example, the task of instructing may be the sole or shared responsibility of:

—skilled tradespeople

—leading hands

—supervisors

—instructors

—apprentice trainers

—managers.

INITIAL PLANNING

A Analyse:

- The training requirements of a newcomer, considering that the person:

  —may have no previous experience in the subject;

  —will need to do productive work as soon as possible.

- What the trainee must learn about:

  —the tools used for the subject;

  —the terminology involved in the subject;

  —basic working methods.

- What will be the first productive work you will be able to give the trainee.

B Decide:

- Whether your trainees need information to supplement that given in this manual.
- Whether or when additional training material or exercises will be required to improve on the skill gained.
- Which other Basic Training Manuals the trainee should use during training.

C Plan:

The explanations, demonstrations and the practice required by the trainee, preferably on an individual basis, if numbers allow.

USING THE MANUAL

It may be of assistance to the trainee to arrange for short periods of learning followed by short periods of practice in applying the knowledge gained.

To keep interest alive, it will be useful to relate, as much as possible, the material treated in this manual with actual practical applications in the field.

PRACTICAL EXERCISES AND PROJECTS

There may be areas and tasks in actual situations where the developing skills of the trainee can be put to effective productive use at any stage during the period he or she is learning the subject. Such possibility should be carefully considered and used to the full for the trainee's benefit as well as that of the firm.

Give the trainee as many opportunities as possible to use the whole range of hand tools on suitable small jobs to enable him or her to acquire quickly the manual dexterity required.

Small projects and exercises to suit particular work situations may be devised, but they must take into consideration the limits of skill and knowledge of the trainee.

Whatever form of exercise is used to develop practical skill, it must be carefully planned. A suggested course of instruction is:

- Prepare the working area, the materials and the hand tools to be used.
- Make the aim of the project clear to the trainee.
- State how you intend to assess the proficiency of the trainee.
- Stress key points in the project, paying particular attention to safety precautions.
- Explain clearly and thoroughly any new steps in the project.
- Check that the trainee can use the hand tools correctly.
- Assess the finished project, record the results and discuss with the trainee your appraisal of his or her performance.
- If you are satisfied with the performance, direct the trainee to the next exercise or project.

TRAINING RECORDS

Simple training records will help in planning systematic training.

Record:

- the parts of the manual learnt by the trainee;
- your assessment of the general skills developed;
- the practical exercises undertaken and completed.

Use your record to measure the trainee's performance and to assess his or her readiness for undertaking actual operations.

Draw up a simple record card to suit your needs.

Using records helps to pinpoint the trainee's strengths and weaknesses. They ensure that training in essential skills is not missed. Training records can be used to help co-ordinate on-the-job training and technical school learning. Where trainees have to serve a probationary period, records assist when the trainee's progress is being assessed.

PUBLICATIONS IN BASIC TRAINING MANUALS — WATER SUPPLY

Title	
11.1	WATER SUPPLY — 1
11.2	WATER SUPPLY — 2
11.3	WATER SUPPLY — 3
11.4	HOT-WATER SYSTEMS

OTHER PUBLICATIONS IN BASIC TRAINING MANUALS
(Available at date of printing)

FITTING SERIES	10 MANUALS
WORKSHOP SAFETY	1 MANUAL
PRACTICAL GEOMETRY	3 MANUALS
LATHE WORK	7 MANUALS
SHAPING AND SLOTTING	3 MANUALS
GRINDING	3 MANUALS
MILLING	4 MANUALS
ARC WELDING	4 MANUALS
SOLDERING	1 MANUAL
SANITARY PLUMBING	4 MANUALS
ROOF PLUMBING	6 MANUALS
BRICKLAYING	2 MANUALS
CARPENTRY AND JOINERY	14 MANUALS (MORE IN PREPARATION)
PAINTING & DECORATING	10 MANUALS
ELECTRICAL	13 MANUALS
MOTOR VEHICLES	10 MANUALS (MORE IN PREPARATION)
PANEL BEATING	3 MANUALS (MORE IN PREPARATION)
VEHICLE PAINTING	1 MANUAL (MORE IN PREPARATION)
FURNITURE REMOVALS	4 MANUALS
TIMBER TECHNOLOGY	1 MANUAL
SHEETMETAL	(MANUALS IN PREPARATION)

Information is available at your local Department of Employment, Education and Training Regional Offices.

Manuals may be purchased from Commonwealth Government Bookshops.

Mail orders to: Mail Order Sales,
Australian Government Publishing Service,
P.O. Box 84,
CANBERRA, A.C.T. 2601.

[illegible]

[illegible]

USAGE

[illegible]

QUALITY AND CONTENT

	Text		Illustrations	
Easy to understand	☐ Yes	☐ No?	☐ Yes	☐ No?
Technically accurate	☐ Yes	☐ No?	☐ Yes	☐ No?
Value in training	☐ Yes	☐ No?	☐ Yes	☐ No?
Up to date	☐ Yes	☐ No?	☐ Yes	☐ No?

Please explain: .....

TRAINING AIDS

Did you use the manual to produce any of the following aids?

☐ Charts ☐ Video/Films
☐ Overhead transparencies ☐ Models
☐ Slides/Audio tapes ☐ Cutaways

NEW MANUALS

What subject areas would you like the Basic Training Manuals to cover in the future?

.....

PERSONAL DETAILS

Name: ..... Position: .....
Address: ..... Organisation: .....
..... Telephone No: .....
..... Postcode ..... Date: .....

Inclusion of your name and telephone number would enable contact to be made to discuss your comments, if necessary.

Please enclose additional information as you think necessary

ALL INFORMATION PROVIDED WILL BE TREATED IN STRICT CONFIDENCE

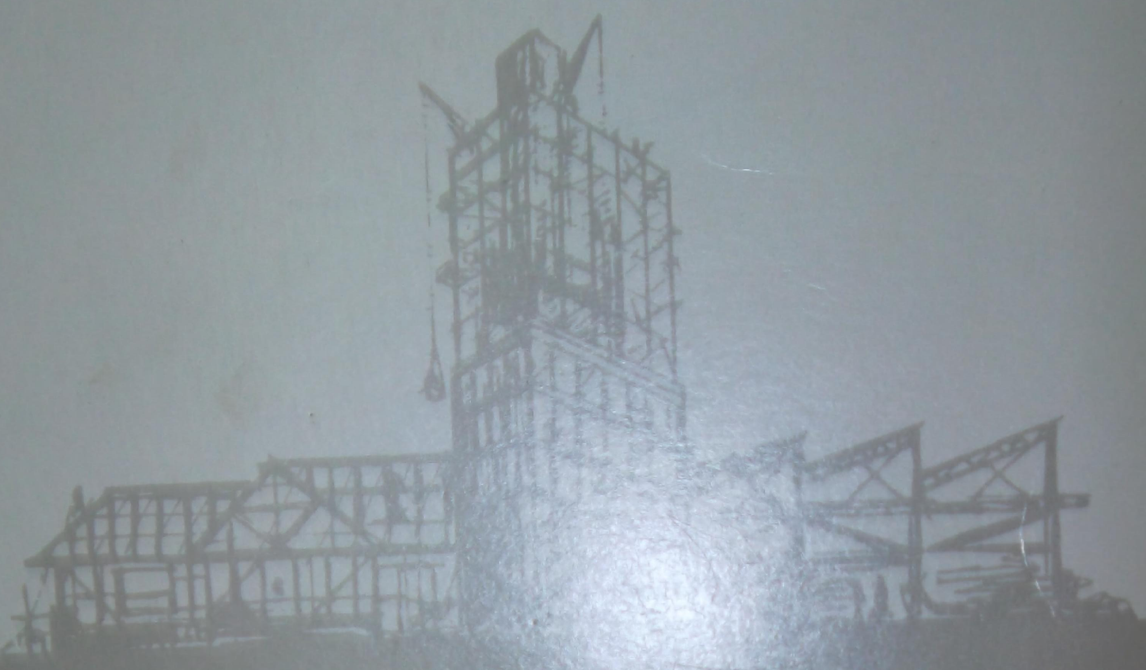

BASIC TRAINING MANUAL

11-3

Water Supply 3

NATIONAL BUILDING AND CONSTRUCTION
INDUSTRY TRAINING COMMITTEE

DEPARTMENT OF EMPLOYMENT AND INDUSTRIAL RELATIONS

BASIC TRAINING MANUAL

11-3
Water Supply 3

Australian Government Publishing Service
Canberra 1983

manual has been produced as the result of the need to update existing manuals in line with the sed National Plumbing Code and to have comprehensive manuals on the aspects of plumbing lable for trainees in the trade.

topics of this manual were compiled by Mr. R. Verity of RMIT in consultation with a working el appointed by the National Building and Construction Industry Training Committee who have roved this publication on behalf of the National Training Council.

panel consisted of:

J. Rutherford	— (Chairman) Plumbers and Gasfitters Employees' Union.
L. Fraser	— TAFE
R. Kelly	— Lecturer — State College of Victoria (Hawthorn), seconded from the Technical Division, Department of Education (Vic.).
J. Park	— Melbourne and Metropolitan Board of Works.
A. Quick	— Quick Contracting Pty Ltd, representing employers.
J. R. M. Jentzema	— Department of Employment and Industrial Relations.

he manual was prepared by the Manuals Unit of the Industry Training Services Branch of the epartment of Employment and Industrial Relations.

he advice and valuable contributions given to the successful production of this publication by the anel are gratefully acknowledged.

EDITOR: Mr. J. R. M. Jentzema.

© Commonwealth of Australia 1983

This manual is copyright. Apart from any fair dealing for the purposes of private study, as permitted under the Copyright Act, no part may be reproduced by any process without written permission. Inquiries should be made to the Australian Government Publishing Service.

ISBN 0 642 00514 9

Printed by Ambassador Press Pty Ltd,
51 Good Street, Granville, NSW 2142

CONTENTS

PREFACE

INSTRUCTIONS TO TRAINEE

SECTION		PAGE
1	**Introduction**	1
2	**Water purification**	1
2.1	Aeration	2
2.2	Filtration	2
2.2.1	Commercial filters	3
2.2.2	Domestic filters	6
3	**Water softening**	11
3.1	Neutralisation of acids	12
3.2	Salts causing hardness in water	12
3.2.2	Effects of hardness in water	12
3.2.3	Types of hardness	12
3.2.4	Removal of hardness	13
3.2.5	Degree of hardness	13
3.2.6	Method of testing	13
3.2.7	Merits of removing temporary hardness by heating	14
3.3	Permanent hardness	14
3.3.1	The base exchange method	14
3.3.2	The softening process	15
3.3.3	Regeneration of Zeolite	17
3.3.4	Summary of base exchange methods of softening water	17
3.3.5	Other methods of removing permanent hardness	18
3.3.6	Types of domestic water softeners	18
3.3.7	Materials of construction	21
3.3.8	Installation	21
3.3.9	Maintenance	22
4	**Sterilisation of water**	23
4.1	Presence of contaminants	23
4.1.1	Reduction of organic matter	23
4.1.2	Requirements of chemical sterilisation	23
4.1.3	Sterilisation of water by chlorine	23
4.1.4	Methods of dechlorinating water	26
4.1.5	Other methods of sterilising water	26
4.1.6	pH Value of water	27
5	**Appliances for raising water**	29
5.1	The centrifugal pump	30
5.1.1	Construction	30
5.1.2	Operation	31
5.1.3	Efficiency	31
5.1.4	Installation	31
5.1.5	Methods of drive	31
5.2	Reciprocating pumps	32
5.2.1	The lift pump (Suction pump)	32
5.2.2	Construction	33
5.2.3	Operation	33
5.3	Lift and force pumps	34
5.3.1	Construction	34

5.3.2 Operation 35
5.4 The differential pump 35
5.4.1 Operation 35
5.5 The force pump 35
5.5.1 Construction 36
5.5.2 Operation 36
5.6 The diaphragm pump 36
5.6.1 Construction 37
5.6.2 Operation 37
5.7 Double-acting reciprocating pumps 37
5.7.1 The double-acting force pump 37
5.7.2 Construction 38
5.7.3 Operation 38
5.8 The semi-rotary pump 39
5.8.1 Construction 39
5.8.2 Operation 39
5.9 Deep-well pump 40
5.9.1 Operation 41
5.9.2 Maintenance 41
5.10 Rotary pumps 41
5.10.1 Gear pumps 41
5.10.2 Construction 41
5.10.3 Operation 41
5.10.4 Installation 41
5.10.5 Turbine pumps 42
5.10.6 Construction 42
5.10.7 The mono pump 42
5.10.8 Construction 44
5.10.9 Operation 44
5.10.10 Characteristics 44
5.11 Air chambers 45
5.12 Hydropneumatic systems 46
5.12.1 Operation 47
5.12.2 Diaphragm-type pressure tank 47
5.12.3 Operation 48
5.13 Installing pumping equipment 48
5.13.1 The pump 50
5.13.2 The suction pipe 50
5.13.3 The delivery pipe 50
5.13.4 Pump valves 51
5.14 The vane pump 51
5.15 The hydraulic ram 52
5.16 Ejectors 53
5.16.1 Non-automatic ejectors 56
5.16.2 Automatic ejectors 57

Revision Questions 57

6 Fixed garden sprinklers 58
6.1 Planning the sprinkler system 60
6.1.1 Spacing the sprinklers 60

7 Fire-protection services 62
7.1 Automatic sprinklers 67
7.1.1 Water supply for fire sprinklers 67
7.1.2 Sprinkler design and operation 67
7.1.3 Standpipes (Hydrants) 68

Revision Questions 71

Notes for the instructor 72

Other publications 73

75

PREFACE

This manual forms part of a series on basic plumbing skills, specifically designed as practical training aids for apprentices in this trade.

It is based on a general syllabus content that exists for courses in the plumbing trades.

Each manual is self-contained and is intended as an instructional guide in on- or off-the-job training situations. It may be used by instructors, or by trainees for self-teaching and private study purposes.

The aim of the manual is to help the trainee to develop a particular skill to the stage where it can be applied productively on the job.

Ideally the manual should be used as part of a course of instruction involving:

- demonstrations of practical skills by instructors, experienced tradesmen or operators;
- planned and supervised practice in handling the tools or machines involved;
- instruction in related theory and workshop technology.

Some notes for the instructor to assist him in planning systematic training on the job are included.

The manuals, or the topics they cover, may be used in any order convenient to the learning needs of the trainee.

As much as was possible to ascertain, most of the important fields have been covered. In special circumstances, it is expected that instructors and trainers will provide trainees with the specific additional information to comply with any local conditions which are at variance with the contents of this manual, where this may be the case.

INSTRUCTIONS TO TRAINEE

This manual is a teaching aid to help you develop skills you need in your job. It is best used on the job where you can handle any tools or equipment.

You should follow the general directions given by the person training you. To reach the required standard of skill, you must pay particular attention to your instructors' explanations and demonstrations. Supervised practice is essential.

Practice means making repeated efforts to improve your level of skill. Study is making an effort to learn. Every advance in skill depends on study and practice. You will make most progress by co-operating actively in the training arranged for you.

When you are told to study all or part of this manual, try to use a definite plan of study. The following plan is effective.

SURVEY: Read quickly through the headings as you turn the pages. Glance at the drawings. Get an overall view before you read.

QUESTION: Ask yourself: What do I know? What do I need to know? How will this manual help me to learn?

READ: Read right through each section carefully. Be thorough, but do not dawdle. Reading quickly will help you concentrate.

DO: Use all your senses in learning. Getting the 'feel' of any tool or equipment is essential in learning to use it. Follow the directions given to you.

REVIEW: Shut the manual. Try to remember the main points of the section. Check to make sure that you are right. Revise points on which you are doubtful; often if necessary.

One way of fixing important instructions in your mind is to repeat them over and over.

Careful study of and practice in the various trade skills treated in this manual will help you develop them to work safely and productively.

SYMBOLS

The symbols shown are used in illustrations in these manuals.

GENERAL:

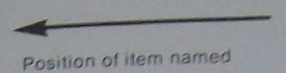

Position of item named



Position of surface named

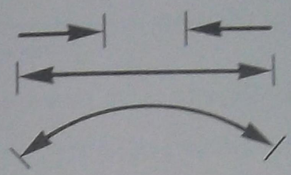

Limits of movement, item or angle



Detail shown enlarged and more clearly

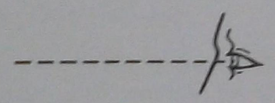

Point or item to be watched

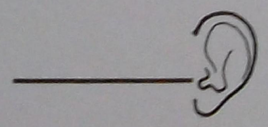

Sound to be listened for

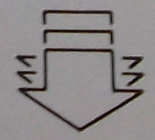

Thrust direction

MOVEMENT ALLOWED OR PRODUCED:

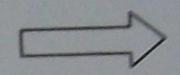

One way

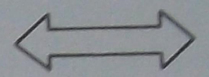

Two way

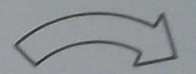

or

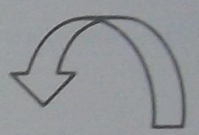

One-way turn



or

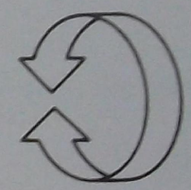

Two-way turn

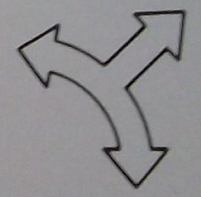

Combined movement

NO MOVEMENT ALLOWED OR PRODUCED:



One way

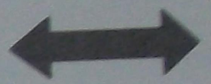

Two way



or



One-way turn

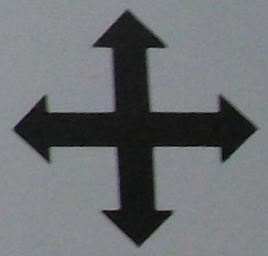

Four way

NOTE: Movement and no movement symbols may be combined.

1 INTRODUCTION

This manual deals with water purification, the means of pumping water by various types of pumps and other devices, fixed garden sprinklers and fire-protection services.

2 WATER PURIFICATION

Water from reservoirs and storage basins may contain organic matter and a variety of dissolved minerals.

To make it fit for consumption, these may have to be removed by special treatment.

Water purification can be done by:

- Aeration
  - — In this process, air is passed through water to eliminate soluble iron compounds and other impurities.
- Filtration
  - — The water is passed through one or more filters which retain solids and allow only clear water to pass through.
- Softening
  - — This is the removal of magnesium and calcium salts from the water. These salts are the cause of 'water hardness'.
- Chlorination
  - — This is done for the elimination from the water of bacteria dangerous to health. Through this process, the water is sterilised.

2.1 AERATION

Soluble iron compounds can be removed by aeration of the water. By passing air through the water, the iron is deposited as soft rust.

An effective way to aerate water is to let it trickle through a succession of perforated trays laden with coke. Air circulates between the trays, or a current of air is provided by mechanical means (fan) and the rust deposits formed are retained on the surface of the coke. From the collection tray, the water is passed through a filter to remove the last traces of rust deposits.

It is impractical to utilise this method for large volumes of water, such as town water supply. Where, in such cases, removal is necessary of dissolved iron compounds or objectionable dissolved gases, such as carbon dioxide and hydrogen sulphide, use is made of a large shallow reservoir over which the water is sprayed into the air from a series of jets similar to garden sprinklers. The water is then collected in the reservoir and distributed from there for use or for further processing, if necessary.

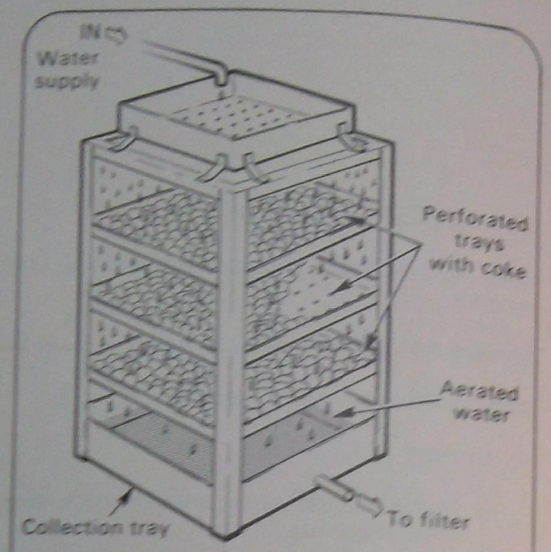

COKE TRAY AERATOR

Aeration of town water supply can also be done by the cascade method. Here, the water overflows from a reservoir at a higher level to one or more at a lower level, over one or more cascades.

2.2 FILTRATION

Streams and rivers carry fine silt in suspension into reservoirs and storage basins. Such water is turbid and unattractive, although not necessarily unsuited to consumption. The turbidity is removed by filtration which is a process by which only water is allowed to pass through, but foreign matter is prevented from doing so.

The main types of filters in use are:

- Commercial
  - Slow sand filter.
  - Rapid sand filter, operating either by gravity or under pressure.
- Domestic, operating through a cartridge, sand, carbon or porous earth.

2.2.1 Commercial filters

Slow sand filters

Because of their slow action, these filters occupy a large area, often up to a hectare (ha) or more.

Construction

Slow sand filters consist of large concrete basins on the bottom of which are placed drains covered with graded stone and gravel. The coarser material is nearer the drain while the finer gravel at the top is covered with a layer of fine sand.

Operation

Water enters the filter above the sand and, as it percolates through the filtering medium, a shiny layer forms on the surface of the sand. This layer consists of suspended matter, algae and micro-organisms. This gelatinous layer is known as the 'zoological layer' and is, in fact, the actual filtering agent which holds back (filters) the impurities in the water.

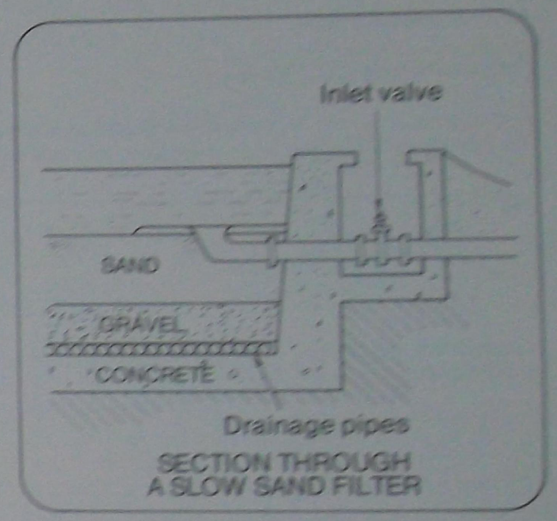

SECTION THROUGH A SLOW SAND FILTER

Maintenance

Eventually, the 'zoological layer' becomes so thick that the filtration is slowed to an uneconomical rate. When this occurs, the filter has to be cleaned out by removing the top layer of sand. In small filters, this is achieved by shovelling, in large installations it is done with bulldozers. Any sand removed must be replaced with clean, fine sand.

Rate of flow

The rate of flow through a slow sand filter is from 16 litres to 27 000 000 litres a hectare per day. This rate may be considerably reduced as the filter becomes choked prior to cleaning. Slow sand filters are gradually being phased out in preference to rapid sand filters.

Rapid sand filters

Rapid sand filters require a much smaller area than the slow sand filter. There are two types:

- The gravity type.
- The pressure type.

The gravity type

In this type, the bed is formed with sand and gravel in the same manner as for a slow sand filter, but the sand is coarser and, therefore, the rate of filtration is higher.

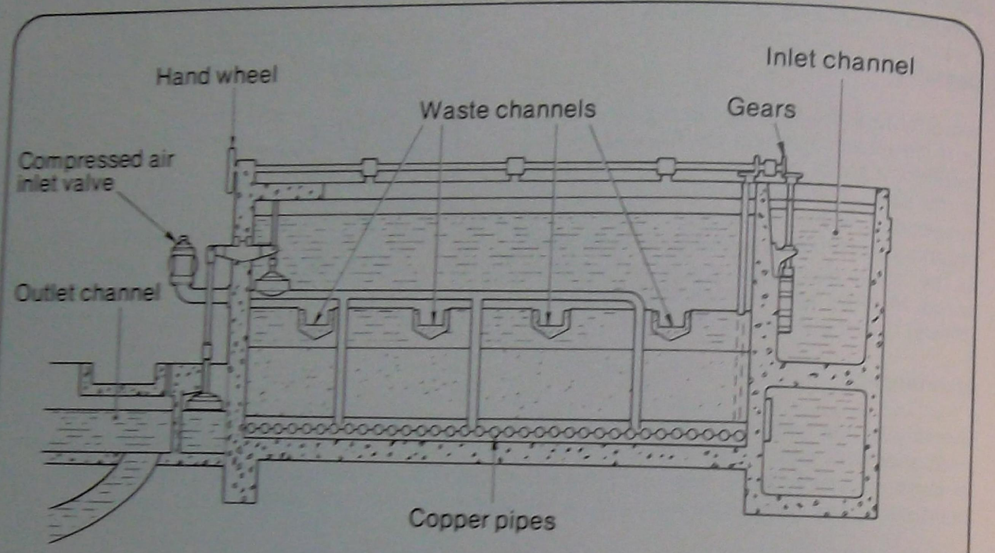

SECTION THROUGH A RAPID GRAVITY FILTER

Operation

The operation of a gravity, rapid sand filter is similar to that previously described for a slow sand filter, with the exception that the zoological layer is replaced by a coagulant to assist the filtration.

The gelatinous hydroxide coats the grains of sand and holds back the bacteria and suspended matter. The coagulant may be added to the water as it passes into the filter, or the floc may be formed in a separate coagulating tank and then piped into the filter.

Maintenance

Owing to the rapid rate of filtration, frequent cleaning is required. This can be carried out quickly by the agitation of the whole filter bed with compressed air, the sediment being flushed to waste.

Rate of filtration

The rate of filtration is normally from 2700 million to 5400 million litres per 0.4 ha, per day, or 6750 million to 13 500 million litres per ha, per day.

The pressure type

This filter is a pressure vessel, partially filled with graded sand and gravel with a strainer system at the bottom through which the filtered water discharges to the outlet.

In the operation of such a filter, in order to make it more effective for the retention of very fine material, smaller organisms and some of the bacteria which may be present, quantities of coagulants in the form of alum and/or soda are added. These are fed-in automatically in measured quantities and form a gelatinous film on the sand bed which prevents the escape of the unwanted items mentioned into the filtered water. During filtration, water is let into the filter via valve 1, percolates through the sand and gravel layers through the strainers and discharges through the open valve 4. An additional branch is usually taken from here which discharges into an overhead tank of which the water-level is controlled by a ball valve.

After some time in operation, the spaces between the grains of sand become clogged up with the foreign matter that has been retained in the filter. There is a pressure drop between the top and the bottom of the filter bed and the production of filtered water is slowed down. In these conditions, it is also possible to get a breakthrough of accumulated foreign matter into the filtered water.

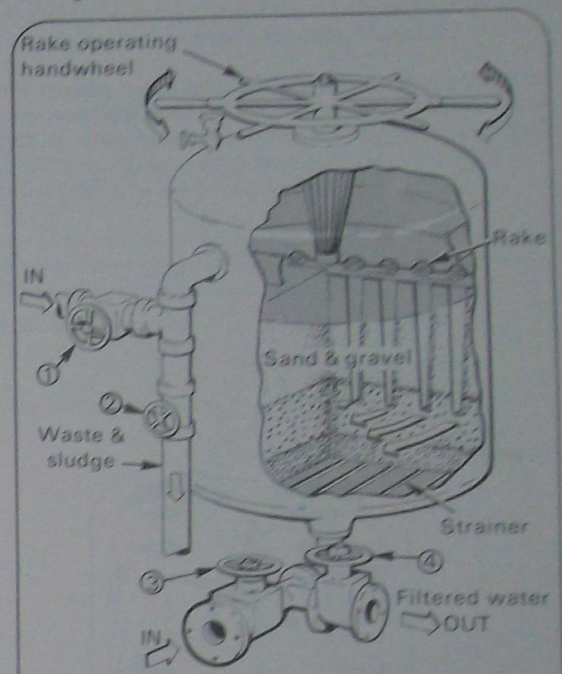

RAPID SAND FILTER

To prevent this from happening, the filter must be cleaned at regular intervals. This is done by the 'backwashing' method. Valves 1 and 4 are closed and valves 3 and 2 opened. Through 3, the water in the overhead tank flows through the filter in the reverse direction in which filtration was taking place. This dislodges the collected impurities which are forced out with the incoming water through the open valve 2 for disposal. This 'backwashing' process is made easier and quicker if the sand bed is stirred by means of mechanical rakes operated either manually or by power. This stirring can also be done by steam or by compressed air introduced through the bottom of the filter.

The 'backwashing' of a rapid sand filter is usually carried out when the pressure drop between inlet and outlet of the filter is around 45 to 50 kPa.

Large water-treatment installations will usually consist of banks of filters in which individual filters can be isolated (or bypassed) for cleaning and 'backwashing' while others remain 'on-line' to continue production of filtered water until their turn comes for 'backwashing'. In such large installations, the 'backwashing' process is usually automatic and is started up when a certain pressure drop is registered or certain predetermined water-levels are reached. When the required circumstances for this are obtained, the appropriate valves are either closed or opened automatically and backwashing takes place, the filter coming back 'on-line' when the proper filtering conditions are restored in the filter.

Multi-unit pressure filter

This type of filter consists of a pressure vessel divided into a number of compartments (units) located around a central pipe. The perforated bottom of each unit, which is some distance away from the bottom of the pressure vessel, supports the filtering medium. The top of each unit is open to the master control chamber into which the water to be filtered is admitted.

During the filtering cycle, the inlet water passes from the master valve chamber through the openings of the units and the filtering medium to the collection chamber and is delivered via a filter-control valve to where the filtered water is stored for future use.

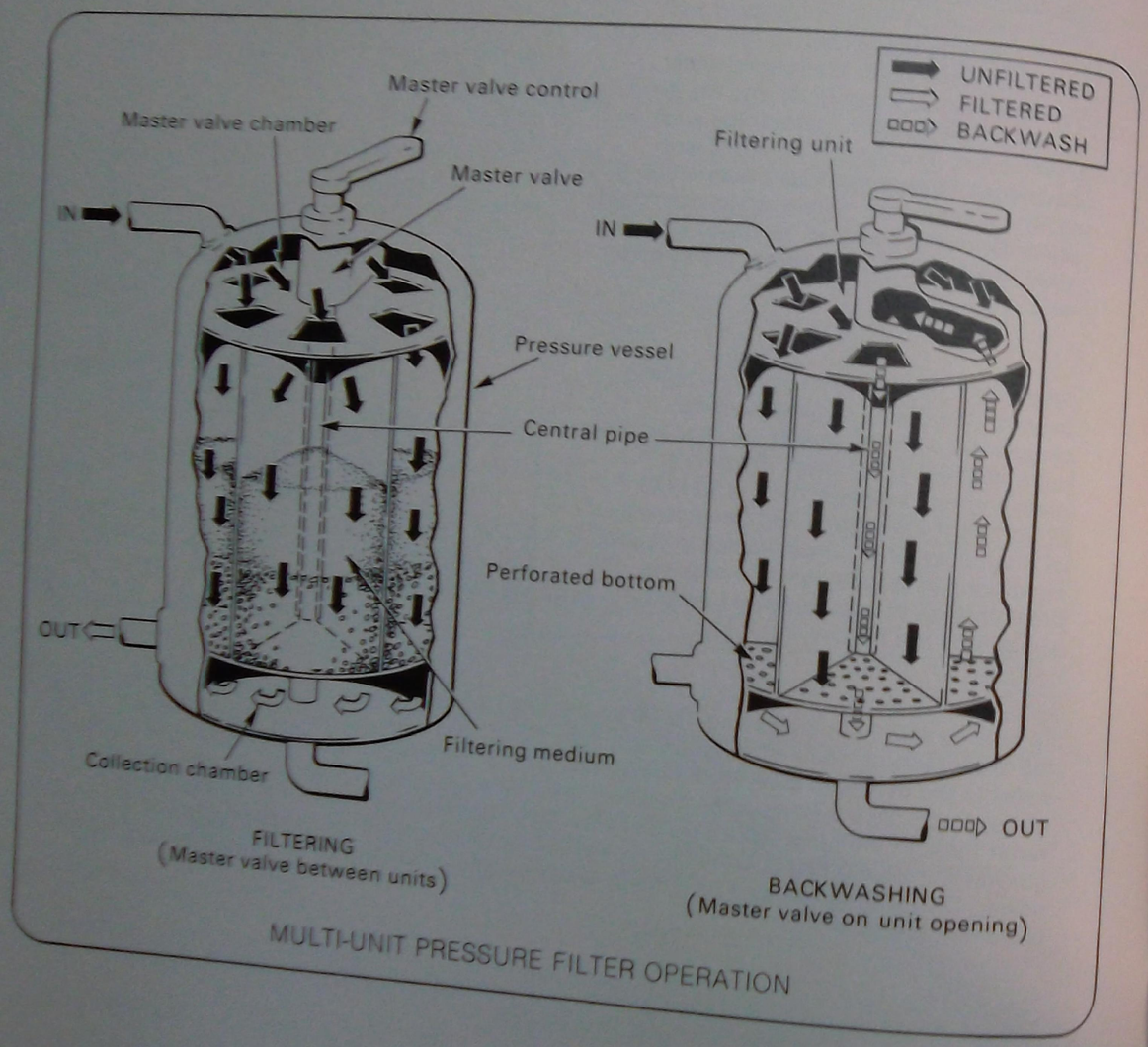

MULTI-UNIT PRESSURE FILTER OPERATION

When the pressure-drop between inlet and outlet becomes too great for proper performance, this condition is indicated on a control panel and 'backwashing' is then carried out as follows:

- A gate valve on the filtered outlet is closed.
- The master valve is lined up with one of the units' inlets in the master-valve chamber.
- Filtered water being processed by the remaining units, now passes from the collection chamber in a reverse-flow direction through the unit in line with the master valve.
- This filtered water 'backwashes' the aligned unit and passes, with the dislodged foreign matter, through the master valve and the central pipe to a disposal drain.
- Each unit in turn can be backwashed this way until the filter can be put back 'on-line' when the master valve is once more located between any two inlets of the filter unit, the filter control outlet opened and the production of filtered water resumed once more.

2.2.2 Domestic filters

Installation of domestic filters is becoming more common as the community realises the need to eliminate turbidity from domestic water supplies.

As well as being objectionable in appearance and taste, turbidity causes build-up in hot-water systems, cisterns, shower sprays, ball valves, etc. Automatic washing machines are coming more into use; filtered water to these appliances is desirable as it eliminates the turbidity that causes discolouration and staining of clothes during the spin-rinse cycles.

Filters, coupled to water softeners, also provide greater efficiency by the softener, by removing sludge which would reduce considerably the efficiency of the softener exchange media.

Three main types of domestic filters are available:

- Cartridge type
- Sand type
- Porous earth type (Hollow candle)

Cartridge type

This type of domestic filter may be connected to either a low- or a high-pressure service.

Construction

The unit consists of:

- An outer casing, either of metal or plastic.
- A perforated inner core, either metal or plastic.
- A disposable cartridge filter medium, usually manufactured from a non-woven material.
- A servicing cap, complete with rubber sealing ring, usually situated at the top of the unit.

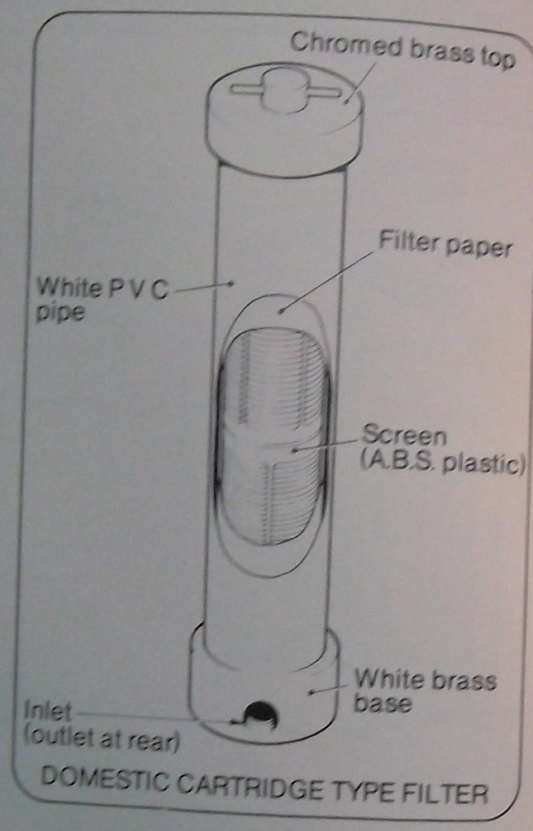

DOMESTIC CARTRIDGE TYPE FILTER

Operation

- Water flows into the unit, filling the area between the outer casing and the filtering medium, which completely surrounds the perforated inner core.
- Water is forced through the filtering medium and flows into the centre of the inner core.
- Suspended matter is prevented from entering the inner core by the filtering medium.
- Filtered water flows through the outlet, then into the service pipeline or to a single discharge point, depending on the filter installation position.

Maintenance

Eventually, the cartridge becomes clogged with suspended matter and the filter must then be serviced as follows:

- Close the inlet control valve.
- Remove the servicing cap.
- Replace the element on the inner core with a new one.
- Reassemble the unit.
- Turn on the inlet control valve.
  - — The unit is again ready for use.
- The 'life' of the element is dependent upon the quantity of water that passes through it and the degree of its turbidity.

Sand type

Construction

The construction of domestic sand filters is basically the same as for commercial sand filters, the major differences being:

- Smaller capacity.
- Cleaning of the filter medium is by backwashing only.

Operation and maintenance

The operation and maintenance of this type of filter is the same as for the commercial sand filter previously described.

Carbon type

The major differences between this filter and the pressure sand type are:

- The filter medium is carbon instead of sand.
- The carbon has to be replaced after considerable use, because it exhausts its capacity to filter water.
  - — Regeneration is not recommended by the manufacturer.

Advantage

This filter medium has a distinct advantage over the sand and cartridge types in that it has the ability to remove tastes and odours, including chlorine, from the water.

Hollow candle (Porous earth type)

Various types are available for domestic use and they are usually installed at the delivery tap. The filtering material can be a hollow candle made of porous earth fitted inside a watertight cylinder. The candle has one closed and one open end (See illustration). The open end connects to the outlet pipe. A gasket between the candle edge and the cover prevents leakage of turbid water to the inside. The watertight cylinder is connected to the water supply.

When this is turned on, the water passes through the pores of the candle to the inside and the matter in suspension remains on the outside. The water so filtered then passes through the outlet.

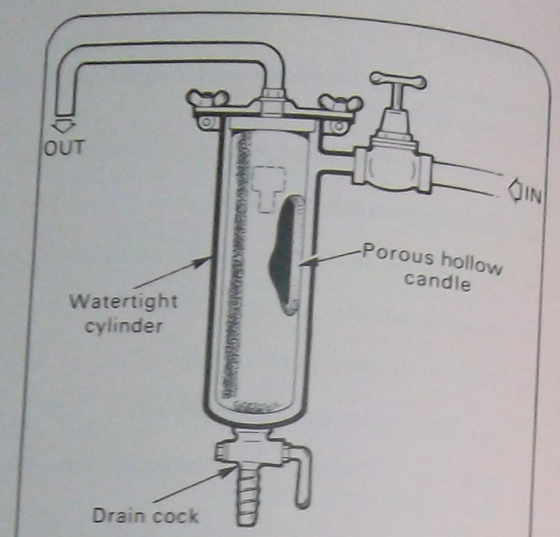

TYPICAL DOMESTIC FILTER

This type of filter has limitations. The filtering candle clogs up relatively quickly and requires regular cleaning by brushing and sterilising by boiling. The candle is fragile, easily broken and still allows bacteria and some very fine suspended matter to pass through.

Such filters can be installed in banks for multipoint use enabling a whole building/residence to be provided with filtered water.

Some types of domestic filter make use of replaceable paper filter cartridges and generally operate on the same principle as the hollow candle.

NOTES

3 WATER SOFTENING

'Hard' water presents problems in both domestic and commercial uses. The poor lathering properties of some water supplies, particularly those from underground sources, are well known. The effects of some waters which cause gastric upsets are also known. Commercially, problems arise when hard water is used in boilers and for specialised processes. The properties which cause this hardness can be removed from water and it is the plumber's task to install the necessary equipment whenever there is a need to 'soften' water.

Causes of hardness

Hardness in water is due to the presence of lime and magnesium salts in solution in the water. These are taken into the water from the ground on which it is stored or through which it passes. Therefore, rain-water stored in metal tanks will contain little hardness and is considered to be 'soft'.

Origin of salts

Salts are formed as a result of a chemical action, or change, which takes place when a base metal and an acid are combined. The acid is neutralised to form a salt, the nature of which is dependent on the type of acid engaged in the chemical action.

Base elements

Various base elements exist in nature. The ones that are considered here are of the metallic type. A few of these are listed in Table 1.

TABLE 1

Base Elements	Chemical Symbol
Calcium	Ca
Sodium	Na
Copper	Cu
Lead	Pb
Zinc	Zn
Magnesium	Mg
Aluminium	Al
Iron	Fe

Acids

The more common acids and the resultant salt each produces are listed in Table 2.

TABLE 2

Acid	Chemical Formula	Resultant Salt Produced
Hydrochloric	HCL	Chlorides
Sulphuric	H_2SO_4	Sulphates
Nitric	HNO_3	Nitrates
Carbonic	H_2CO_3	Carbonates

3.1 NEUTRALISATION OF ACIDS

The chemical action which produces salts can be made to take place under industrial conditions but, over a long period of time, nature also performs chemical neutralisation. The resultant salts become dissolved in varying degrees in the underground and surface water supplies. Only some of these dissolved salts cause hardness in water.

Example of industrial neutralisation

A simple example of the neutralisation of an acid with a base metal to produce a resultant salt is the manufacture of 'Killed spirits' (Zinc chloride).

In this case, the base metal of zinc is used to neutralise hydrochloric acid. This neutralisation can be expressed by the chemical equation:

$$Zn + 2HCL \rightarrow H_2 + ZnCl_2$$

i.e. Zinc plus hydrochloric acid produces zinc chloride, with hydrogen gas being evolved in the process.

3.2 SALTS CAUSING HARDNESS IN WATER

There are many natural salts, too numerous to mention, but those which command our attention in respect to hard water supplies are:

- Chlorides: calcium and magnesium.
- Sulphates: calcium and magnesium.
- Carbonates and bicarbonates: calcium.

3.2.2 Effects of hardness in water

Problems associated with hardness in water supplies are as follows:

When water containing calcium and magnesium is lathered with soap (Sodium stearate), the stearate in the soap combines with the calcium and magnesium bases to form calcium and magnesium stearate. This produces the 'scum' on hard water and is commonly termed 'soap curd'. Although this curd is still produced when sodium stearate is in excess, it becomes contained and its effect is largely neutralised by the standing or 'continuous' lather which is formed.

3.2.3 Types of hardness

When discussing hardness in water, two types must always be considered, namely: temporary and permanent.

Temporary hardness

This is the hardness produced by the presence of dissolved bicarbonates of calcium and magnesium. These bicarbonates are soluble only in water containing free carbon dioxide (CO_2). If this CO_2 is removed, the bicarbonates are converted to carbonates, which are insoluble, and are precipitated (deposited) in minute solid particles.

Permanent hardness

The dissolved salts which cause permanent hardness are:

- Chlorides of calcium and magnesium; and
- Sulphates of calcium and magnesium.

The removal of these salts can only be carried out chemically and the most economical method adopted is known as the BASE EXCHANGE METHOD.

3.2.4 Removal of hardness

Temporary hardness

In cold-water services, the deposit of calcium carbonate occurs in the same manner as it does in nature. The deposit is slight and does not accumulate sufficiently to obstruct the flow of water in pipes. In fact, it acts as a protective coating and so prevents corrosion of metals.

If water containing calcium bicarbonate is heated, the carbon dioxide is liberated and the insoluble carbonate is formed much more rapidly than in cold-water services. The higher the temperature of the water the more readily the carbonate precipitates until, at boiling point, no trace of carbonate remains.

The bicarbonates of lime (calcium) and magnesium in water produce the deposits in hot-water pipes, kettles (fur), boilers ('boiler scale'), etc.

Water containing large amounts of magnesium sulphate ($Mg\ SO_4$) may cause gastric upsets in man.

3.2.5 Degree of hardness

The amount of degree of hardness contained in water is expressed in grains per litre or in degrees. Most recognised authorities consider a few degrees of hardness to be beneficial in water as it is more palatable than water containing no hardness.

When the amount of hardness exceeds 7 or 8 grains per 4.5 litres, i.e. 7 or 8 degrees, it should be excluded for drinking purposes.

Estimating degree of hardness

Determining accurately the amount of hardness in a water is a matter for chemical analysis. However, one test may be applied, in which small, measured quantities of a standard soap solution are successively added to a measured sample of water to estimate the degree of hardness of the water.

3.2.6 Method of testing

- Place 50 c.c. of the water to be tested into a graduated glass container (1).
- Add one drop of standard soap solution to the water (2).
- Seal the container and shake it vigorously (3).
- Repeat the procedures (2) and (3) until a standing lather persists for five minutes.
- The amount of hardness, in degrees, is equal to the number of drops of soap solution required to produce the standing lather.

  — The first drop is ignored as it is considered only to wet the molecules of the water.

The reduction in the bicarbonate content softens the water accordingly.

Table 3 shows the variation in amount of scale deposit expressed as a percentage of total bicarbonate hardness.

TABLE 3

CARBONATE DEPOSIT RESULTING FROM EFFECT OF HEAT ON TEMPORARY HARDNESS (BICARBONATES)						
Temperature of water °C	48.9	60	71.1	82.2	93.3	100
Percentage of temporary hardness precipitated	8	25	45	63	77	100

3.2.7 Merits of removing temporary hardness by heating

The advantage of heating water containing calcium bicarbonate in order to soften it and so conserve soap is obvious, but there are material disadvantages caused by the scale deposit.

The scale deposit blocks waterways in hot-water pipes and also restricts the passage of heat through boiler walls and from electric elements. In order to avoid these scale problems, it is common practice in institutions and in industries, such as laundries, to soften the water by some means before it is heated.

Liming

Hardness caused by calcium bicarbonate may be removed by adding lime, $Ca(OH)_2$. This appears a paradox because lime (calcium) is the prime cause of hardness but, when slaked lime is added to water containing bicarbonates, the slaked lime reacts with the bicarbonates to form insoluble carbonates which are deposited.

With this method of softening, it is important to avoid adding an excess of slaked lime as some of this will then dissolve and form lime water which is a permanently hard water. If this happens, even harder water than that being treated will result.

3.3 PERMANENT HARDNESS

The hardness in water, due to the presence of calcium and magnesium sulphates and chlorides, is removed by a chemical process known as the 'Base Exchange Method' which will also remove any temporary hardness at the same time.

3.3.1 The base exchange method

In the base exchange process (sometimes referred to as the permutit or 'zeolite' process) water is softened by exchanging the magnesium and calcium salts in the hard water for sodium salts which have no detrimental effect on the lathering properties of soap.

This process takes place in a container called a 'water softener', in which is placed a bed of sodium alumina sand, or a bed of synthetic resin beads impregnated with sodium chloride (termed Sodium zeolite; Ze).

3.3.2 The softening process

As the water containing salts which produce hardness passes through the zeolite bed, the sodium is exchanged for the calcium or magnesium. The calcium or magnesium reacts with the zeolite and forms insoluble compounds which remain in the bed. The temporary hardness is removed when the sodium bicarbonate, which is soluble, passes onward with the water. The sodium bicarbonate (bicarbonate of soda or baking soda), which remains in the water, does not produce hardness.

The base exchange may be shown as follows:

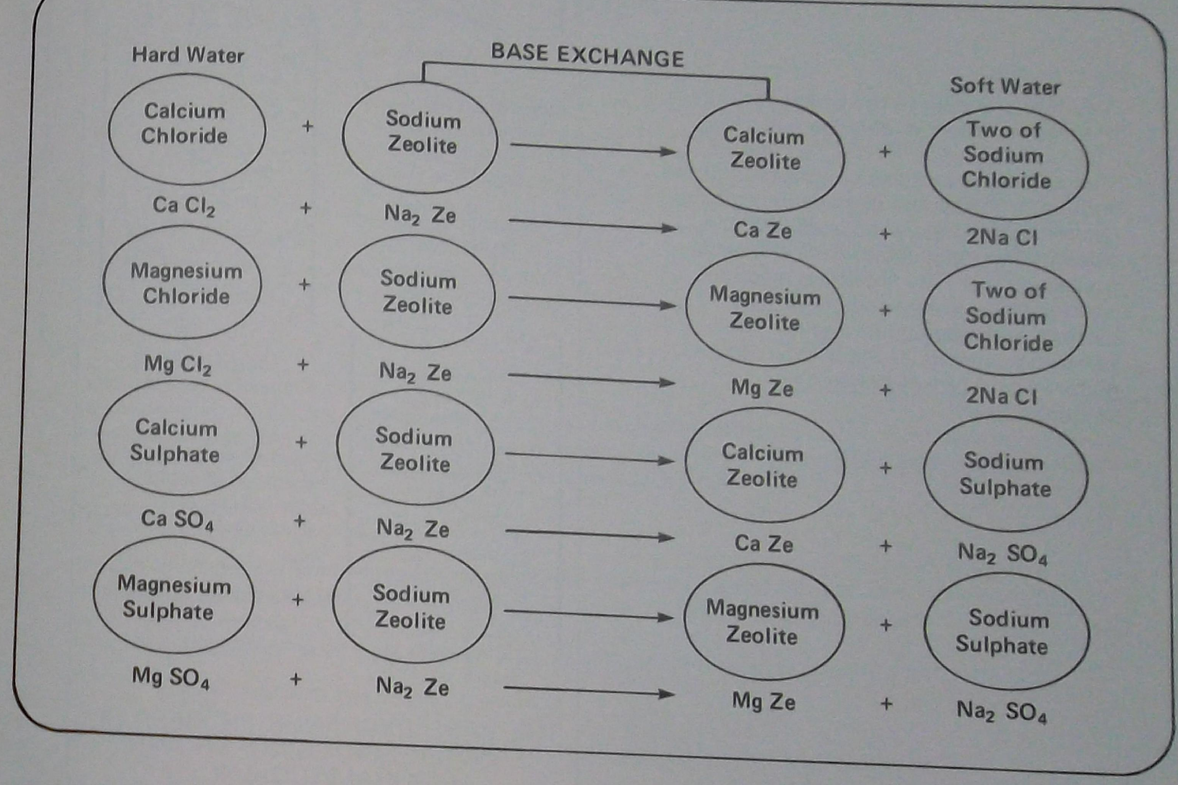

A further example of the base exchange process is shown in diagrammatic form.

This exchange process continues until the sodium in the zeolite (soda alumina sand) becomes completely replaced with the calcium and magnesium base elements from the water. The softening medium which was originally sodium is now calcium and magnesium zeolite. The softening capacity of the zeolite can be restored by a process known as 'Regeneration'.

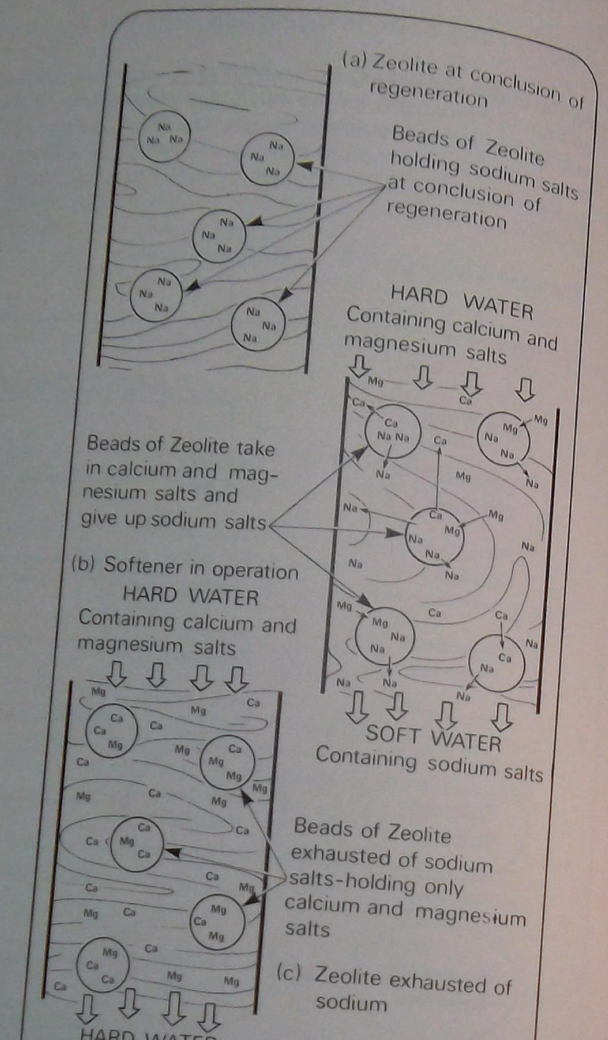

THE BASE EXCHANGE PROCESS OF WATER SOFTENING - SHOWN DIAGRAMATICALLY

3.3.3 Regeneration of zeolite

To replenish or regenerate the exhausted zeolite, another base exchange process is used in which sodium base salts are allowed to make intimate contact with zeolite for 20 to 30 minutes.

This is carried out by adding a salt solution (sodium chloride) to the exhausted medium, and a reserve basal exchange takes place, i.e. the sodium salts replace the calcium and magnesium salts in the zeolite, the latter salts being flushed to waste before putting the softener into operation again. This reverse process can be shown as follows:

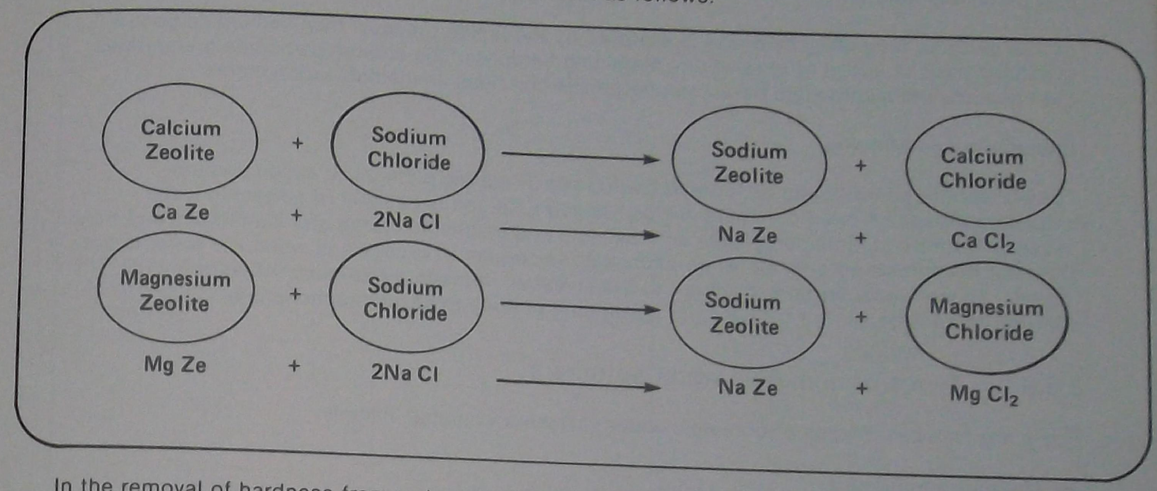

In the removal of hardness from water supplies, the zeolite, either natural or artificial, is only a medium for carrying the sodium particles or 'ions' and for retaining the calcium and magnesium particles or 'ions' and does not enter into the chemical action.

NOTE:

Before the regeneration process is commenced, the flow of water through the softener is usually reversed to remove suspended matter and also to aerate the softening medium.

Normally, the direction of flow through a water softener is downwards during the softening process.

3.3.4 Summary of base exchange methods of softening water

- Hard water, containing calcium and magnesium salts, passes downwards through the zeolite.
- Sodium salts are given off to the water and calcium and magnesium salts are retained by the zeolite.
- After a period of time the sodium salts are exhausted.
- Regeneration of the zeolite is achieved by adding salt solution to the softening medium — sodium salts replace the calcium and magnesium salts in zeolite.
- Softening process may now be recommenced.

3.3.5 Other methods of removing permanent hardness

Two other methods may be used to remove permanent hardness from water supplies. They are:

- The soda-lime method
- Phosphate conditioning

The soda-lime method

In this method, temporary hardness is removed by the liming process, then sodium carbonate (washing soda) is added to remove any remaining hardness. The sodium carbonate precipitates the calcium- and magnesium-based sulphates and chlorides as insoluble carbonates.

Phosphate conditioning

The phosphate conditioning of water is carried out by adding a chemical called sodium hexametaphosphate (sold commercially as 'Calgon'). Calgon is capable of softening water because it forms soluble complexes with calcium and magnesium, iron and aluminium, and thus prevents the formation of scale when phosphate is present in excess and when the water is not too hot. These characteristics have led to the so-called 'threshold treatment' of water by the addition of as little as half to five parts per million of sodium hexametaphosphate.

3.3.6 Types of domestic water softeners

There are four basic types of domestic water softeners available, namely:

- Manual regeneration
- Semi-automatic regeneration
- Automatic regeneration
- Exchange type

Manual regeneration

With this type of softener, all operations involved in regeneration are carried out manually as follows:

- The softening medium is backflushed when the water supply to the fixtures is shut off and the flow of hard water through the softener is reversed. Any suspended matter held in the zeolite is flushed to waste during this stage.
- All control valves, except the drain valve, are then closed, the salt cap removed, the recommended weight of salt placed in the top of the softener and the salt cap replaced.
- Water, flowing in the normal direction through the softener, dissolves the salt and carries it to all parts of the zeolite.
- With some makes of softeners the flow of water is stopped when the discharge from the drainpipe has a distinct taste of salt.
  - Some makes of softeners require a steady flow of salt and water to be maintained during this stage.
- After approximately a 20-minute period, all traces of salt are flushed from the softener; testing with the standard soap solution will indicate when this stage is complete.
- All valves are now returned to the normal operation position and softened water is again fed into the soft-water service pipelines.

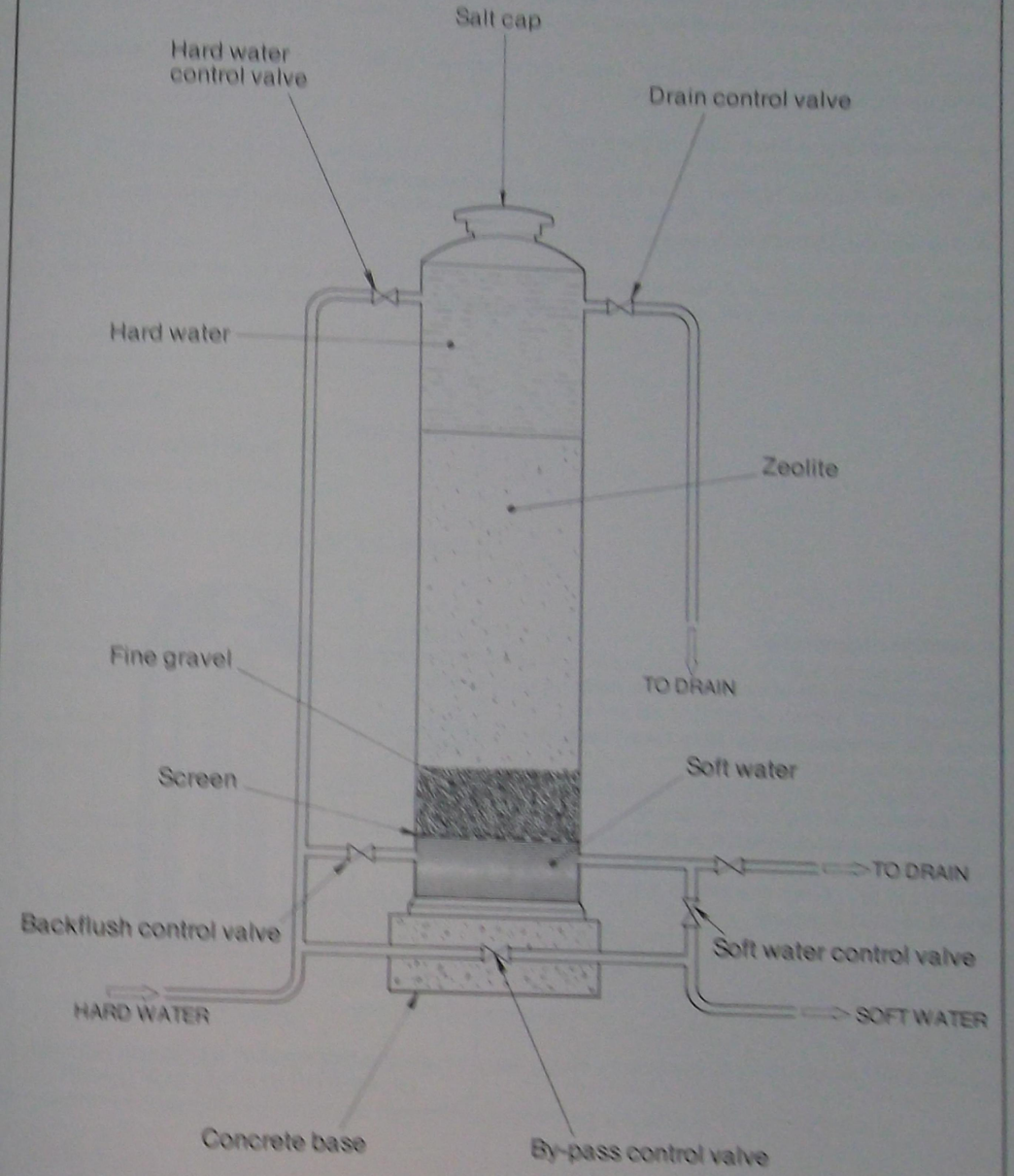

DOMESTIC WATER SOFTENER