AD-A255 714

ASD-TR-91-5009

MIL-STD-1760 APPLICATION GUIDELINES

Computing Devices Company
Hastings, East Sussex, England

Control Data Corporation
Minneapolis, Minnesota

DTIC
ELECTE
SEP 14 1992
S B D

September 1991

Final Report for Period 1984 - 1987

Approved for public release; distribution unlimited

Directorate of Avionics Engineering
DCS for Integrated Engineering and Technical Management
Aeronautical Systems Division
Air Force Systems Command
Wright-Patterson Air Force Base OH 45433-6503

92-25056

92 9 10 104

NOTICE

When Government drawings, specifications, or other data are used for any purpose other than in connection with a definitely related Government-related procurement, the United States Government incurs no responsibility or any obligation whatsoever. The fact that the government may have formulated or in any way supplied the said drawings, specifications, or other data, is not to be regarded by implication, or otherwise in any manner construed, as licensing the holder, or any other person or corporation; or as conveying any rights or permission to manufacture, use, or sell any patented invention that may in any way be related thereto.

This report is releasable to the National Technical Information Service (NTIS). At NTIS, it will be available to the general public, including foreign nations.

This technical report has been reviewed and is approved for publication.

JERRY L. DUCHENE, Chief
Integrated Avionics Systems Division
Directorate of Avionics Engineering

DAVID G. ARDIS
Acting Technical Director
Directorate of Avionics Engineering

FOR THE COMMANDER

GARY L. LUDWIG, SES
Director, Avionics Engineering
DCS, Integrated Engineering
and Technical Management

If your address has changed, if you wish to be removed from our mailing list, or if the addressee is no longer employed by your organization please notify ASD/ENASD, W-PAFB OH 45433-6503 to help us maintain a current mailing list.

Copies of this report should not be returned unless return is required by security considerations, contractual obligations, or notice on a specific document.

UNCLASSIFIED
SECURITY CLASSIFICATION OF THIS PAGE

REPORT DOCUMENTATION PAGE

Form Approved
OMB No. 0704-0188

1a. REPORT SECURITY CLASSIFICATION UNCLASSIFIED	1b. RESTRICTIVE MARKINGS N/A
2a. SECURITY CLASSIFICATION AUTHORITY	3. DISTRIBUTION/AVAILABILITY OF REPORT Approved for public release; distribution unlimited
2b. DECLASSIFICATION/DOWNGRADING SCHEDULE	
4. PERFORMING ORGANIZATION REPORT NUMBER(S) 182-80-18	5. MONITORING ORGANIZATION REPORT NUMBER(S) ASD-TR-91-5009
6a. NAME OF PERFORMING ORGANIZATION Control Data Corporation 6b. OFFICE SYMBOL (If applicable)	7a. NAME OF MONITORING ORGANIZATION Avionics Integration Branch (ASD/ENASD)
6c. ADDRESS (City, State, and ZIP Code) P. O. Box 1305 Minneapolis MN 55440-1305	7b. ADDRESS (City, State, and ZIP Code) Wright-Patterson AFB OH 45433-6503
8a. NAME OF FUNDING/SPONSORING ORGANIZATION Naval Weapons Center (NWC) 8b. OFFICE SYMBOL (If applicable) Code 3144	9. PROCUREMENT INSTRUMENT IDENTIFICATION NUMBER N60530-82-R-0012
8c. ADDRESS (City, State, and ZIP Code) China Lake CA 93555-6001	10. SOURCE OF FUNDING NUMBERS PROGRAM ELEMENT NO. / PROJECT NO. / TASK NO / WORK UNIT ACCESSION NO

11. TITLE (Include Security Classification)
MIL-STD-1760 Application Guidelines

12. PERSONAL AUTHOR(S)

13a. TYPE OF REPORT	13b. TIME COVERED	14. DATE OF REPORT (Year, Month, Day)	15. PAGE COUNT
Final	FROM 1984 TO 1987	1991, Sep	406

16. SUPPLEMENTARY NOTATION

17. COSATI CODES		
FIELD	GROUP	SUB-GROUP
01	03	
19	01	

18. SUBJECT TERMS (Continue on reverse if necessary and identify by block number)
avionics, aircraft/store electical interface, MIL-STD-1760, MIL-STD-1553, stores management system, aircraft armament, weapons, stores

19. ABSTRACT (Continue on reverse if necessary and identify by block number)

This report addresses those issues which are associated with the practical implementation of MIL-STD-1760, the Aircraft/Store Electrical Interconnection System, into both present and future aircraft and stores. The report provides practical guidance and associated rationale for implementors of MIL-STD-1760. The report consists of three parts: the Application Guidelines, Appendix A, and Appendix B.

(continued on reverse)

20. DISTRIBUTION/AVAILABILITY OF ABSTRACT ☐ UNCLASSIFIED/UNLIMITED ☐ SAME AS RPT ☒ DTIC USERS	21. ABSTRACT SECURITY CLASSIFICATION UNCLASSIFIED
22a. NAME OF RESPONSIBLE INDIVIDUAL James E. Spieth	22b. TELEPHONE (Include Area Code) 513-255-1715 22c. OFFICE SYMBOL ASD/YFEA

DD Form 1473, JUN 86 Previous editions are obsolete.

SECURITY CLASSIFICATION OF THIS PAGE
UNCLASSIFIED

Block 19 continued

The Application Guidelines contain:

a. Introductory sections including background on the Aircraft Armament Interoperable Interface Program.

b. A description of the Aircraft/Store Electrical Interconnection System Validation System that was designed, built, tested, and evaluated.

c. A description of the MIL-STD-1760 Implementation Case Study, which determined design issues associated with implementing MIL-STD-1760 on an in-service aircraft; the F-16. The study was constrained by the requirement to retain and utilize existing avionics and stores management hardware and software to the maximum degree practicable.

Appendix A contains:

a. A discussion of the purpose, goals, and projected benefits of MIL-STD-1760.

b. A brief description of MIL-STD-1760.

c. A discussion of the process of applying MIL-STD-1760 to weapon systems.

d. A list and discussion of MIL-STD-1760 implementation issues and associated guidance and rationale. This guidance and rationale are based upon the experience gained from the Aircraft/Store Electrical Interconnection System Validation System, the Implementation Case Study, the Implementation Survey, and other studies previously performed by the contractors.

Appendix B contains detailed rationale for the guidance in Appendix A.

FOREWORD

This document was prepared by Computing Devices Company and Control Data Corporation under the joint Navy/Air Force Aircraft Armament Interoperable Interface contract. This document is being published and distributed as a technical report in order to have the information it contains regarding MIL-STD-1760 reach as many users as quickly as possible.

As a joint service contract, many people and organizations were involved in the process of providing direction and review that led to the completion of this task of the contract. These organizations and personnel included: Naval Weapons Center at China Lake CA, the contracting office for the contract, and Mr. Carl Stoddard, the contracting officer technical representative (Code 3144); the Engineering Standardization Division of the US Air Force (USAF) Armament Division (AD/ENSM) at Eglin Air Force Base FL; the Aircraft and Crew Systems Technology Directorate at the Naval Air Development Center (Code 6012), Warminster PA; Naval Air Systems Command (AIR-540) at Washington, DC; and the Systems Engineering Avionics Facility of the USAF Aeronautical Systems Division (ASD/ENASF) at Wright-Patterson Air Force Base OH.

This document compliments a previously published technical report written by LTV Corp and entitled "Design Principles and Practices for Implementation of MIL-STD-1760 in Aircraft and Stores" (reference number ASD-TR-87-5028). This report is available from the Defense Technical Information Center or the National Technical Information Service (reference number AD A183 724).

The views, opinions, and/or findings contained in this report are those of the contractors and should not be construed as an official Department of the Air Force position, policy or decision.

DTIC QUALITY INSPECTED 3

Accession For
NTIS GRA&I ☑
DTIC TAB ☐
Unannounced ☐
Justification
By
Distribution/
Availability Codes
Dist | Avail and/or Special
A-1

PREFACE

This document is the Final issue of the MIL-STD-1760 Application Guidelines (CDRL item BOXC).

This work has been undertaken as part of Phase II, Task 8 of the Aircraft Armament Interoperable Interface (A^2I^2) contract (contract number N60530-82-R-0012). The contract monitor is Mr Carl Stoddard of Naval Weapons Center (NWC), China Lake, CA and the technical monitor was Mr John Slivinski, and then Lt Paul Ivone and Mr Richard Lewandowski, ASD/ENASF, Wright-Patterson Air Force Base, OH.

Principal contributors to this document are:

Computing Devices -

Victoria Fuller
David Hough
Steve Knowles
Hugh Perry
Rick Wiles
Brian Winn
Rob Hill
Peter Hunt
Peter Mackean
Sue Spice
John Wilhelm

WINTEC -

Frank Woodall

The Computing Devices task manager is Hugh Perry.

The development of MIL-STD-1760 has been undertaken with the objective of reducing significantly the proliferation of different types of aircraft/store electrical interfaces, thereby improving aircraft/store interoperability and reducing store integration problems.

This document addresses those issues which are associated with the practical implementation of MIL-STD-1760 in a real aircraft and store environment. It contains the results implementation experience gained as the result of comprehensive studies and the full implementation and evaluation of the standard. This experience is generalized into Application Guidance that is considered useful for assisting future implementors of the standard.

This document is divided into three parts:

(1) The first part is the Application Guidelines Report (AGR) and includes program background and a implementation case study.

(2) The second part (Appendix A) is an issue and guidance document. It includes a summary of the projected benefits of the standard, a brief description of it and a discussion of the MIL-STD-1760 Application Process. The main portion of this second part contains a list of implementation issues and application guidance associated with each issue.

(3) The third part (Appendix B) contains the rationale for the conclusions contained in the second part.

CONTENTS

Paragraph	Title	Page
1.	INTRODUCTION	1
1.1	SCOPE OF THE APPLICATION GUIDELINES	1
1.2	PURPOSE OF THE APPLICATION GUIDELINES	1
1.3	STRUCTURE OF DOCUMENT	2
1.4	APPLICATION GUIDELINES DEVELOPMENT PROCESS AND OVERALL CONTENT	2
1.5	CONTENT OF APPLICATION GUIDELINES	2
2.	REFERENCED DOCUMENTS	4
2.1	GOVERNMENT DOCUMENTS	4
2.1.1	Military Standards	4
2.1.2	Military Specifications	4
2.1.3	Handbooks	4
2.1.4	NATO Standardization Agreement	4
2.1.5	Other Documents	5
2.2	CONTRACTOR DOCUMENTS	5
2.3	MIL-STD-1760 Version	5
3.	DEFINITION OF TERMS	6
3.1	DEFINITION AND USE OF TERMS	6
3.1.1	AVS	6
3.1.2	AVS Rig	6
3.1.3	AVS Rig System	6
3.1.4	Store	6
3.1.5	Aircraft/Store Electrical Interconnection System (AEIS)	7
3.1.6	Electrical Interface Types	7
3.1.7	Standard Store Interface (SSI)	7
3.1.8	Non-Standard Store Interface (NSSI)	7
3.1.9	Interoperable Store	7
3.1.10	Aircraft Station	7
3.1.11	Hierarchical Bus Network	7
3.1.12	Arming	7
3.1.13	Irreversible Commit	7
3.1.14	Store Separation	8
3.1.15	Store Employment	8
3.1.16	Firing	8
3.1.17	Release	8
3.1.18	Launch	8
3.1.19	Multi-function controls and displays (MFCD)	8
3.1.20	Jettison	8
3.1.21	Reversionary activity	8
3.1.22	Store selection	8
3.1.23	Store communication	8

CONTENTS - continued

Paragraph	Title	Page
3.1.24	AEIS Implementation System (AIS)	8
3.2	ACRONYMS AND ABBREVIATIONS	8
4.	OVERVIEW OF THE CDC AAII PROGRAM	9
4.1	THE AIRCRAFT ARMAMENT INTEROPERABLE INTERFACE PROGRAM	9
4.2	THE CDC AAII PROGRAM	9
4.2.1	Program Objectives	9
4.2.2	Principal Program Tasks	11
4.2.3	Program Schedule	12
4.3	TASK DESCRIPTIONS	12
4.3.1	Develop AIS Requirements	12
4.3.2	Design AEIS Logical Design Definition (LDD)	13
4.3.3	Develop Generic AIS Design	13
4.3.4	Design, Fabricate and Test an AEIS Validation System (AVS) and its Test Environment	14
4.3.5	Test and Evaluate MIL-STD-1760 and the AVS	15
4.3.6	Perform F-16 Case Study	15
4.3.7	Survey of MIL-STD-1760 Implementations	16
4.3.8	Develop Application Guidelines	16
5.	DESCRIPTION OF THE AEIS VALIDATION SYSTEM AND THE AVS TEST SYSTEM	17
5.1	AEIS VALIDATION SYSTEM (AVS)	17
5.1.1	AVS Objectives	18
5.1.2	AVS Definition	18
5.1.3	AVS Performance	20
5.1.4	AVS Interfaces	23
5.1.4.1	Stores Interfaces	23
5.1.4.2	Suspension Equipment Interfaces	23
5.1.4.3	Aircraft Interfaces	23
5.1.4.4	Crew Interfaces	23
5.1.5	AVS Design	23
5.2	AVS Test System	36
5.2.1	General	36
5.2.2	AVS Test System Functions	37
5.2.3	AVS Test System Design	39
5.3	MIL-STD-1760 Test and Evaluation	39
5.3.1	MIL-STD-1760 Test Plan Generation	40
5.3.2	MIL-STD-1760 Test Plan Execution	40
5.3.3	AVS Evaluation	40
5.3.4	MIL-STD-1760A Evaluation	42
5.3.5	MIL-STD-1760 Logical Design Definition (LDD) Evaluation	42
5.4	Summary of Results of Test and Evaluation	42
5.4.1	MIL-STD-1760 Evaluation	42
5.4.2	MIL-STD-1760 Test Plan	43

CONTENTS - continued

Paragraph	Title	Page
5.4.3	AVS Evaluation	44
6.	MIL-STD-1760 IMPLEMENTATION CASE STUDY	45
6.1	PURPOSE AND SCOPE OF THE CASE STUDY	45
6.1.1	Purpose	45
6.1.2	Scope	45
6.1.3	Approach	45
6.2	CASE STUDY AIRCRAFT (F-16C/D)	45
6.2.1	General	46
6.2.2	Current and Projected Stores	47
6.2.3	F-16 C/D Current MIL-STD-1760 Provisions	53
6.2.4	System Components Effected by MIL-STD-1760	55
6.3	IMPLEMENTATION REQUIREMENTS	70
6.3.1	Discussion of Required Modifications	70
6.4	IMPLEMENTATION SUMMARY	92
6.4.1	Implementation of Specific 1760 Functions	93
6.5	CASE STUDY SUMMARY	94
6.5.1	Power System	94
6.5.2	Avionics System Interfaces	95
6.5.3	Ground Support Equipment	95
6.5.4	Summary	96
7.	DESCRIPTION OF APPENDIX A and APPENDIX B	97
7.1	Appendix A - Issues and Guidance	97
7.2	Appendix B - Rationale for Appendix A	97
APPENDIX A	ISSUES and GUIDANCE	98
APPENDIX B	RATIONALE for APPENDIX A	281

Figure	Title	Page
1.1	Purpose & Readership of the Application Guidelines	1
1.2	Guidelines Development Process and Overall Document Content	3
4.1	The Development of MIL-STD-1760	10
4.2	Overview of CDC AAII Program	11
4.3	CDC AAII Program Schedule	12
4.4	MIL-STD-1760 Weapon Requirements of USAF Aircraft Types	13
4.5	Elements of MIL-STD-1760	14
4.6	Page Analysis of Proposed AEIS LDD	14
4.7	Factors influencing the generic AIS design	15
4.8	AEIS Validation System and Test & Evaluation System	16

CONTENTS - continued

Figure	Title	Page
5.1	AEIS Validation System (AVS)	17
5.2	AVS System Diagram	19
5.3	AVS store loadouts (MIL-STD-1760 Stores)	21
5.4	AVS stores loadouts (existing stores)	22
5.5	Network Comparisons	25
5.6	PCE Block Diagram	30
5.7	SSE Block Diagram	31
5.8	SNE Block Diagram	32
5.9	APS Block Diagram	33
5.10	Carriage Store Equipment Block Diagram	34
5.11	Display Controller Block Diagram	35
5.12	MFD Block Diagram	36
5.13	AVSTS Block Diagram	38
5.14	MIL-STD-1760 Test and Evaluation Process	41
6.1	Typical External Store Station Arrangement	48
6.2	Store Station Authorizations for External Stores	49
6.3	Currently Certified and Projected Stores	50
6.4	Current F-16 MIL-STD-1760A Configuration	54
6.5	F-16 C/D stores management system block diagram	56
6.6	Functional Diagram of Weapons Multiplex Bus	60
6.7	SMS OFP Structure	61
6.8	Stores Standby Power System	64
6.9	Video Switch Functional Diagram	67
6.10	F-16 Video Control	68
6.11	F-16 Video System	69
6.12	F-16 Case Study Configuration of MIL-STD-1760 Classes	71
6.13	Extension of 1553 to Stations 1, 2, 3A, 7A, 8, and 9	72
6.14	Centralized High Bandwidth Switching Network	74
6.15	Digital High Band Frequency Switch	75
6.16	Proposed F-16 C/D RF Network	76
6.17	Second Video Line to STAs 4, 5, and 6 1760 ASIs	77
6.18	Functional Representation of a Video Switching Unit (Element)	78
6.19	Video to Stations 4, 5, and 6	78
6.20	Routing to Stations 1, 2, 3A, 7A, 8, and 9 1760 ASIs	79
6.21	Routing of Video Switch Discretes to Stations 1, 2, 3A, 7A, 8, and 9 MRIUs	80
6.22	Routing of Second and Third 115 VAC Phases to Stations 1, 2, 3A, 7A, 8, and 9	81
6.23	Proposed Routing and Interface Locations, Wing Pylon	86
6.24	Current ACIU Hardware Design	88

Table	Title	Page
6.1	Location of W-Mux Station Matrices	71
6.2	F-16 Compatible Signal at Wing A/G Stations 3, 4, 6 & 7	83
6.3	F-16 Compatible Signal at Wing A/A Stations 1, 2, 3A, 7A, 8, & 9	84
6.4	Compatible Signal at Centerline Station (Station 5)	85

SECTION 1

INTRODUCTION

1.1 SCOPE OF THE APPLICATION GUIDELINES The Application Guidelines records experience gained and lessons learned from the studies, designs and evaluations undertaken during the AAII Program, and provides practical guidance and associated rationale for implementors of MIL-STD-1760 in future applications.

1.2 PURPOSE OF THE APPLICATION GUIDELINES The purpose of the MIL-STD-1760 Application Guidelines is to provide practical guidance for implementors of MIL-STD-1760 in future store and aircraft applications, as illustrated in Figure 1.1. The standard has a significant impact on the system design of related avionics systems, such as the Stores Management System (SMS), analog data transfer equipment, the Power Distribution System (PDS) and Data Transfer Equipment (DTE). It also impacts the design of the stores themselves. It is anticipated that the document will provide useful information to: System Program Offices (SPOs), Aircraft Prime Contractors, Avionics and Store System Designers, System Integrators, and Equipment Users. The document has been developed with four key objectives:

a. To identify key Implementation Issues relevant to the MIL-STD-1760 Application process and provide recommended implementation approaches for each issue.

b. To describe the practical basis and rationale for recommendations made.

c. To provide visibility into on-going MIL-STD-1760 applications.

d. To allow the reader to obtain the specific information he needs easily and rapidly.

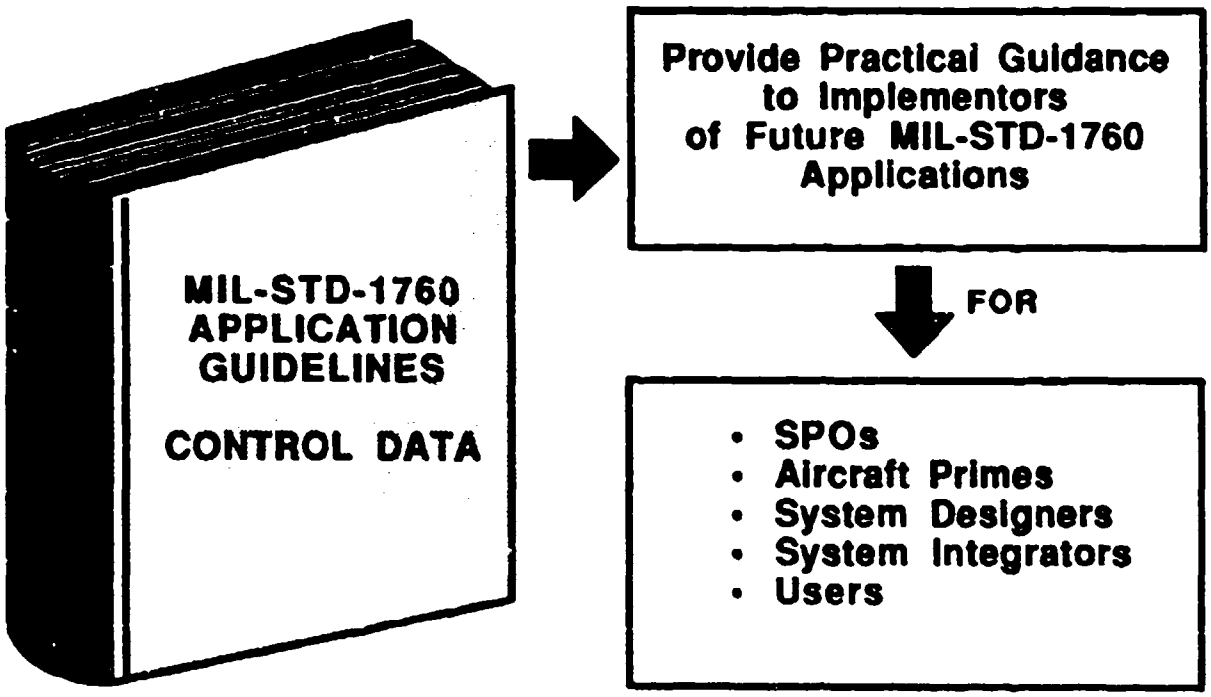

FIGURE 1.1 Purpose and Readership of the Application Guidelines

1.3 STRUCTURE OF DOCUMENT The document is divided into three parts, the Application Guidelines Report (AGR), Appendix A entitled "A Guide to MIL-STD-1760 Applications," and Appendix B. The AGR summarizes the AAII Implementation Examples in two main sections:

a. The AEIS Validation System (AVS) and AVS Test System
b. The F-16 C/D Aircraft Implementation Case Study

The principal content of Appendix A is a description of MIL-STD-1760 Implementation Issues, and recommended guidance for the implementation of each one. Appendix B includes the detailed rationale for the implementation guidance included in Appendix A.

1.4 APPLICATION GUIDELINES DEVELOPMENT PROCESS AND OVERALL CONTENT The application guidance contained in Appendix A has been derived from a wide experience base of MIL-STD-1760 implementations. Figure 1.2 illustrates the process that has been undertaken to develop the issues and guidance relevant to MIL-STD-1760 implementation. The list of issues has been derived from:

a. System studies undertaken in Phase I of the AAII Program (Described in Section 4).

b. Detailed system, hardware and software experience gained through the design, test and evaluation of a system which fully implements MIL-STD-1760 - namely the AVS (This system is described in Section 5).

c. The F-16 C/D Case Study, which considered design issues associated with implementing the full MIL-STD-1760 on a tactical aircraft utilizing existing avionics equipment to the maximum degree practicable. The study is described in section 6.

d. A survey of Air Force planned implementations of MIL-STD-1760 in aircraft and store programs.

Through the experience gained through the four activities described above, implementation guidance for each issue has been derived. Where issues have been considered from more than one of these activities, the guidance provided is an amalgamation of the results of each activity. This approach has enabled a wide spectrum of experience to be gained within the constraints of the program schedule. Figure 1.2 also summarizes the main sections contained in the AGR and Appendix A. Careful consideration has been given to the format of the presentation of the Implementation Guidance in Appendix A. Depending upon the particular interest of the reader, he may wish to reference a particular topic in terms of the relevant MIL-STD-1760 paragraph, the relevant phase of the Application Process, or a specific implementation issue. Appendix A has been structured to simplify the reader's access to his relevant data.

1.5 CONTENT OF APPLICATION GUIDELINES It must be noted that material was not gathered after June 1986 for the AGR. Consequently, some of the data and information may have become outdated.

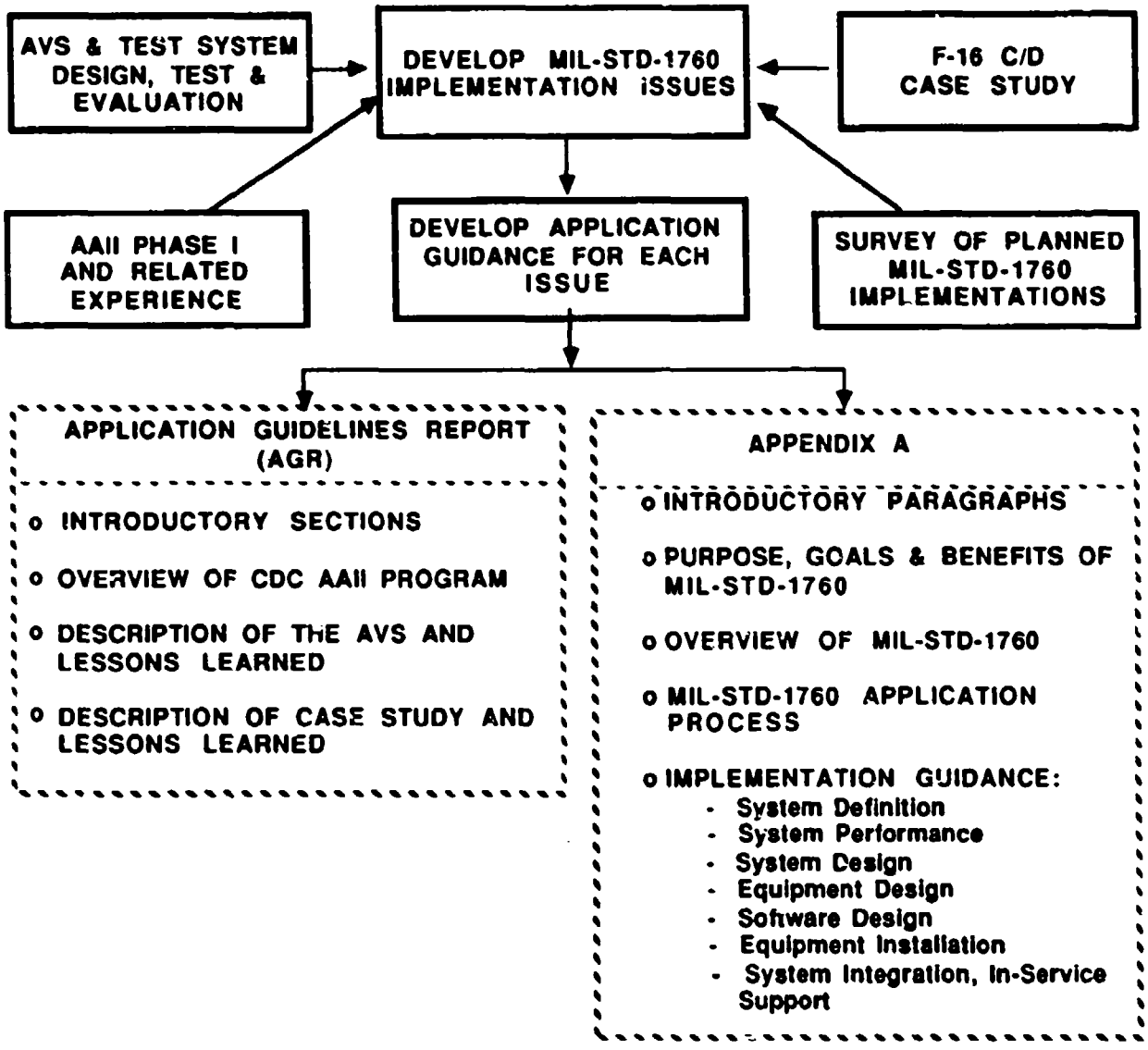

FIGURE 1.2 Guidelines Development Process and Overall Document Content

SECTION 2

REFERENCED DOCUMENTS

2.1 GOVERNMENT DOCUMENTS Unless otherwise specified in paragraph 2.3, the following specifications, standards, and handbooks form a part of this document to the extent specified herein.

2.1.1 Military Standards

MIL-STD-454	Standard General Requirements for Electronic Equipment
MIL-STD-461	Electromagnetic Interference Characteristics Requirements for Equipment
MIL-STD-462	Electromagnetic Interference Characteristics, Measurement of
MIL-STD-704D	Aircraft Electrical Power Characteristics
MIL-STD-882A	Safety Program for System and Subsystems and Equipment, Requirements for
MIL-STD-1553B	Aircraft Internal Time Division Command Response Multiplex Data Bus
MIL-STD-1760	Aircraft/Store Electrical Interconnection System
MIL-STD-1815A	Ada Programming Language

2.1.2 Military Specifications

MIL-E-5400	General Equipment Environment
MIL-C-38999	Connector, Electrical, Circular, Miniature, High Density, Quick Disconnect (Bayonet, Threaded, and Breech Coupling), Environment Resistant, Removable Crimp and Hermetic Solder Contacts, General Specification for

2.1.3 Handbooks

MIL-HDBK-244	Aircraft-Store Integration

2.1.4 NATO Standardization Agreement

STANAG 3350 AVS	Monochrome Video Standard for Aircraft System Applications

2.1.5 Other Documents

DRAFT MIL-STD-1760A	Aircraft/Store Electrical Interconnection System (Draft for Comment, April 1985)
DRAFT Notice 1 to MIL-STD-1760A	Logical Requirements (June 1985)

2.2 CONTRACTOR DOCUMENTS

CDRL: COOK - Type A System Specification (for an AEIS Implementation System). July 1983 (Reference CDC 182-02-01).

CDRL: COOL - Generic SMS System Design B1 Specification (Reference CDC 182-04-02).

182-51-02	AIM-9L Parameters
182-60-05	PCE B2 Specifications (CDC)
182-60-06	SSE B2 Specifications (CDC)
182-60-07	SNE B2 Specifications (CDC)
182-60-08	APS B2 Specifications (CDC)
182-60-09	CSE B2 Specifications (CDC)
182-60-10	DC B2 Specifications (CDC)
182-60-11	MFD B2 Specifications (CDC)
182-60-12	SU B2 Specifications (CDC)
182-60-21	Aircraft Wiring (CDC)
182-70-07	MIL-STD-1760 Evaluation Plan (CDC)
182-70-06	AVS Evaluation Plan (CDC)
182-70-13	LDD Evaluation Plan (CDC)
182-60-22	MIL-STD-1760 Impact of Changes

2.3 MIL-STD-1760 For the purposes of this document, MIL-STD-1760 shall be defined as April 1985 draft MIL-STD-1760A, as amended by June 1985 DRAFT Notice 1 as limited by document 182-60-22.

SECTION 3

DEFINITION OF TERMS

3.1 DEFINITION AND USE OF TERMS Terms when used within this document are as defined in the referenced documents, MIL-HDBK-244, the NATO Glossary of Terms and Definitions for Military Use, and as follows:

3.1.1 AVS - This is the AEIS Validation System, as described in section 5 of this document.

3.1.2 AVS Rig - This is the AVS and the avionics simulator described in section 5 of this document.

3.1.3 AVS Rig System - This is the total evaluation system described in section 5 of this document. NOTE: The AVS Rig System is a generic SMS simulator and it contains store simulation systems. Because of this, stores are not actually released or jettisoned. However, for consistency with the generic SMS requirements the terms are used as if real stores were managed. In this context the terms should be taken to mean "functions performed as if the AVS were contained within an In-Service Aircraft."

3.1.4 Store - A store is any device intended for internal or external carriage and mounted on an aircraft, whether or not the item is intended to be separated in flight. There are two categories of stores:

a. Carriage stores are suspension and release equipment that are mounted on a non-permanent basis, and may be fitted to more than one aircraft type or one aircraft station. Pylons and primary racks (such as MAU-12) are not carriage stores.

b. Mission stores are all stores, excluding carriage stores and include, but are not limited to, the following:

Missiles
Bombs
Nuclear weapons
Rocket pods, dispensers capable of ejecting multiple submunitions, guns and gun pods
Torpedoes
Pyrotechnic devices
Sonobuoys
Flares, chaff dispensers
Drones
Pods (laser designator, electronic countermeasures, store control, data link, reconnaissance)
Fuel and spray tanks
Target and cargo drop containers.

Note that pods directly associated with aircraft flight control functions are not considered to be stores. Also, note that individual rockets, gun rounds and submunitions are not considered to be stores. In general, mission stores directly support a specific mission of an aircraft.

3.1.5 Aircraft/Store Electrical Interconnection System (AEIS) - The AEIS is a system composed of electrical (and fiber optic) interfaces on aircraft and stores through which aircraft energize, control, and employ stores. The AEIS consists of electrical interfaces necessary for the transfer of electrical power and data between aircraft and stores from one store to another store via the aircraft. It is defined in MIL-STD-1760.

3.1.6 Electrical Interface Types - The AEIS consists of four electrical interface types as follows:

a. Aircraft Station Interface (ASI) - The Aircraft Station interface is on the aircraft structure where the mission or carriage is electrically connected. This interface is usually on the aircraft side of an aircraft-to-store umbilical cable (Some carriage configurations may not use an "umbilical cable," for example rail launchers). The Aircraft Station Interface locations include pylons, conformal and fuselage hard points, internal weapon bays, and wing tips.

b. Carriage Store Interface (CSI) - The Carriage Store Interface is on the carriage store structure to which the aircraft is electrically connected. This interface is on the store side of an aircraft-to-store umbilical cable.

c. Carriage Store Station Interface (CSSI) - The Carriage Store Station Interface is on the carriage store structure to which the mission store is electrically connected. This interface is usually on the carriage store side of the carriage store-to-mission store umbilical cable (Some carriage stores, such as rail launchers, may not use an umbilical cable but use some other cable/connector mechanism).

d. Mission Store Interface (MSI) - The Mission Store Interface is on the mission store structure to which the aircraft or carriage store is electrically connected. This interface is on the mission store side of an aircraft-to-store umbilical cable, a carriage store-to-mission store umbilical cable, or a rail launcher cable/connector mechanism.

3.1.7 Standard Store Interface (SSI) - The term "standard store interface" is used to describe any electrical aircraft/store interface which complies with MIL-STD-1760.

3.1.8 Non-Standard Store Interface (NSSI) - The term "non-standard store interface" is used to describe any electrical aircraft/store interface which does not comply with MIL-STD-1760.

3.1.9 Interoperable Store - Any store with an SSI that is intended for use on two or more aircraft types (excludes special carriage trays).

3.1.10 Aircraft Station - The term "aircraft station" is used to describe a primary hard-point fixture or fixtures on the aircraft structure at which a number of primary store stations and/or MIL-STD-1760 aircraft station interfaces (ASI) may be simultaneously located.

3.1.11 Hierarchical Bus Network - Is used to describe a network of two or more MIL-STD-1553 buses where one or more buses has a command response protocol independent of one or more of the buses, and which have data passing relationships.

3.1.12 Arming - The term "arming" is used to describe the process of preparing a store for employment from a safe condition. Arming is only initiated as a result of positive request from the aircrew to the aircraft. Arming does not include the transition to an irreversible state.

3.1.13 Irreversible Commit - This term is used to describe any processes which result in irreversible changes in the employment states of stores and which excludes the store separation

process. Subsequent to irreversible commit, either a clean release or a hang-fire will be achieved.

3.1.14 Store Separation - The term "store separation" is used to describe any process which results in the intended separation of stores from the aircraft while in flight. The process includes bomb release, missile launch, rocket fire and jettison activities.

3.1.15 Store Employment - The term "store employment" is used to describe the process which allows a store to fulfill its intended operation requirement.

3.1.16 Firing - This term is used to describe the process of causing a projectile to be separated from the aircraft through a tube (It is usually applied to firing guns, rockets and dispenser type munitions).

3.1.17 Release - The term "release" is used to describe the separation of stores from the aircraft in flight, usually in a vertical direction, for the purposes of employing the store. This would include "Eject Launch."

3.1.18 Launch - The term "launch" is used to describe the process of separating self-propelled stores, such as missiles, from the aircraft in flight for the purposes of employing the store.

3.1.19 Multi-function controls and displays (MFCD) - The term "MFCD" is used to describe those cockpit control and display facilities which could be used to effect store control.

3.1.20 Jettison - This term is used to describe the process by which stores are intentionally separated from the aircraft in a safe and unarmed condition. Jettison is normally performed following a system or store failure or when the safety of the aircraft may be in jeopardy. Stores may be selectively jettisoned individually or in groups. Emergency jettison separates all appropriate stores from the aircraft in a minimum period of time.

3.1.21 Reversionary activity - The term "reversionary activity" is used to describe the process which may occur following a detected system or store failure, which attempts to allow system availability to be maintained.

3.1.22 Store selection - A store is defined as having been selected when any function or signal (other than store communications or store interruptive BIT) has been activated or applied to that store.

3.1.23 Store communication - The term "store communication" is used to describe transmission to/from a store via the multiplex data bus.

3.1.24 AEIS Implementation System (AIS) - The term "AIS" is used to describe those aircraft avionics subsystems which are directly involved in the implementation of the AEIS. The functional boundary of the ASI is not necessarily that defined by the physical boundary of the avionics subsystems involved. The principal subsystem associated with the AIS is the SMS.

3.2 ACRONYMS AND ABBREVIATIONS These are defined in Appendix A.

SECTION 4

OVERVIEW OF THE CDC AAII PROGRAM

4.1 THE AIRCRAFT ARMAMENT INTEROPERABLE INTERFACE (AAII) PROGRAM The AAII program is a joint US Air Force and Navy program which has been tasked to develop all aspects of the Aircraft Electrical Interface System (AEIS), as defined by MIL-STD-1760. The program is divided into a number of elements, as shown in figure 4.1. One key element is the concept development and documentation of the avionics systems which will implement the standard, together with the design of the logical, or protocol, aspects of the standard itself.

4.2 THE CDC AAII PROGRAM

4.2.1 Program Objectives. The following discussion describes the program undertaken by Control Data Corporation (CDC) and its then subsidiary, Computing Devices, UK. The work was also supported by WINTEC Inc. in Valparaiso, Florida, and, in phase I, the Boeing Airplane Company, Seattle. Throughout the program, which covered the 1982 to 1987 timeframe, a number of changes and redirections were implemented to reflect the developing status of the MIL-STD-1760. After the first one year phase of the program, the CDC contract was extended to accommodate the MIL-STD-1760 program requirements of both the Air Force and Navy. The major objectives of the program were:

a. To determine the requirements of the avionics systems which will be required to implement MIL-STD-1760 on future USAF aircraft [The principal system affected is the Stores Management System (SMS)].

b. To develop an optimum generic system architectural design which would implement these requirements.

c. To develop a Logical Design Definition (LDD) for the standard.

d. To test and evaluate MIL-STD-1760 within a fully representative system environment.

e. To perform a MIL-STD-1760 implementation case study on an in-service aircraft, for which the F-16 was selected and to survey the current implementation status of the standard in Air Force aircraft and stores (These studies provide real-world implementation experience).

f. To document all the MIL-STD-1760 implementation experience gained within a fully representative system environment, in an Application Guidelines Report to assist future implementors of the standard.

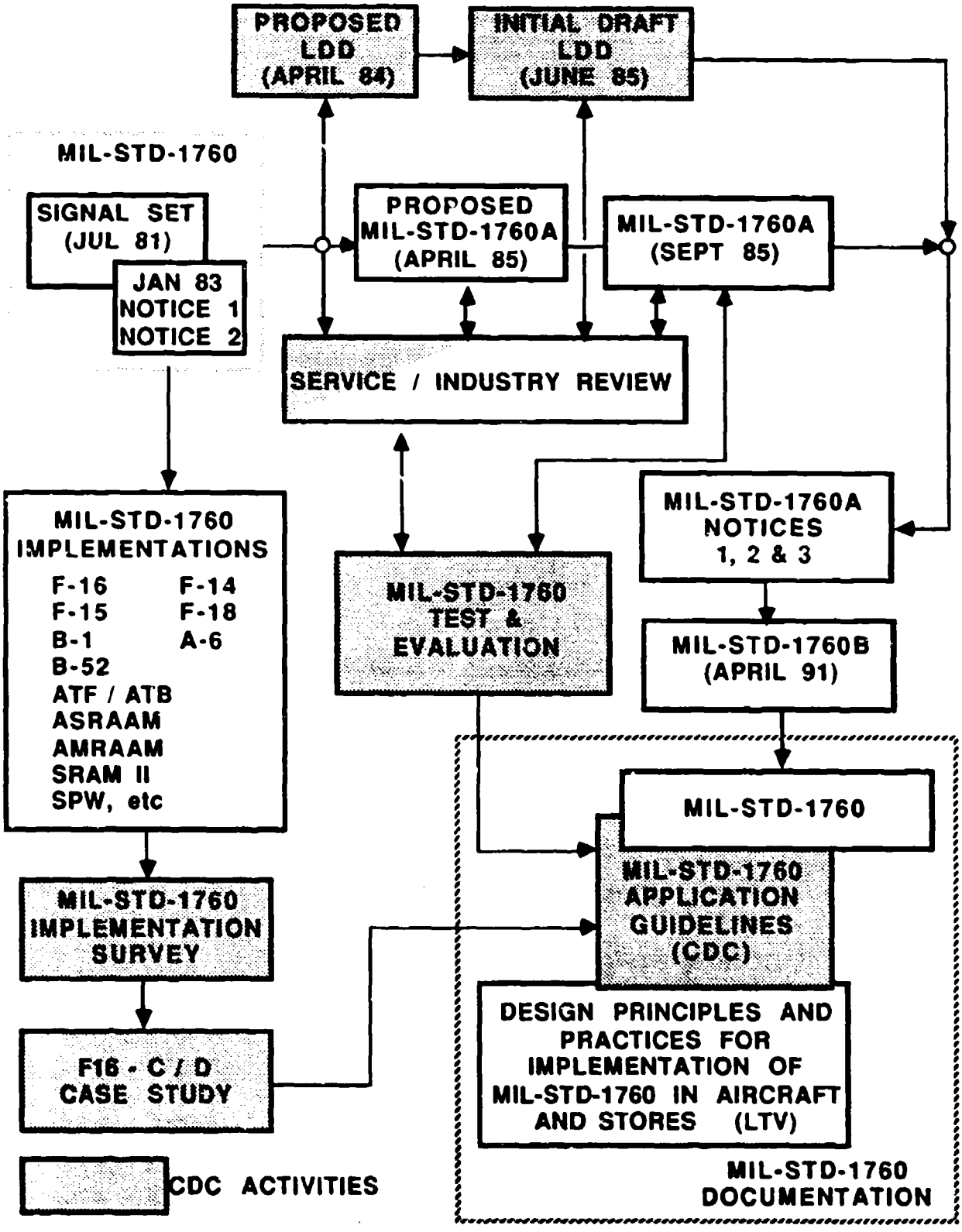

FIGURE 4.1 The Development of MIL-STD-1760

4.2.2 Principal Program Tasks. An overview of the tasks undertaken is shown in figure 4.2, together with their interrelationships. The program was divided into two principal phases, and consisted of the following tasks:

PHASE I

(1) Develop AEIS Implementation System (AIS) Requirements
(2) Design an AEIS LDD
(3) Develop a Generic AIS Design

PHASE II

(4) Design, Fabricate and Test an AEIS Validation System (AVS) and its test environment.
(5) Test and Evaluate MIL-STD-1760 and the AVS, and then deliver it to the Navy 1760 Test Facility.
(6) Perform a MIL-STD-1760 Implementation Case Study (on the F-16 C/D).
(7) Survey the planned Air Force MIL-STD-1760 aircraft and store implementations.
(8) Develop MIL-STD-1760 Application Guidelines to assist future implementors of the standard.

These tasks are shown highlighted in figure 4.1 (where relevant), to indicate how the CDC contract forms part of the overall MIL-STD-1760 development program.

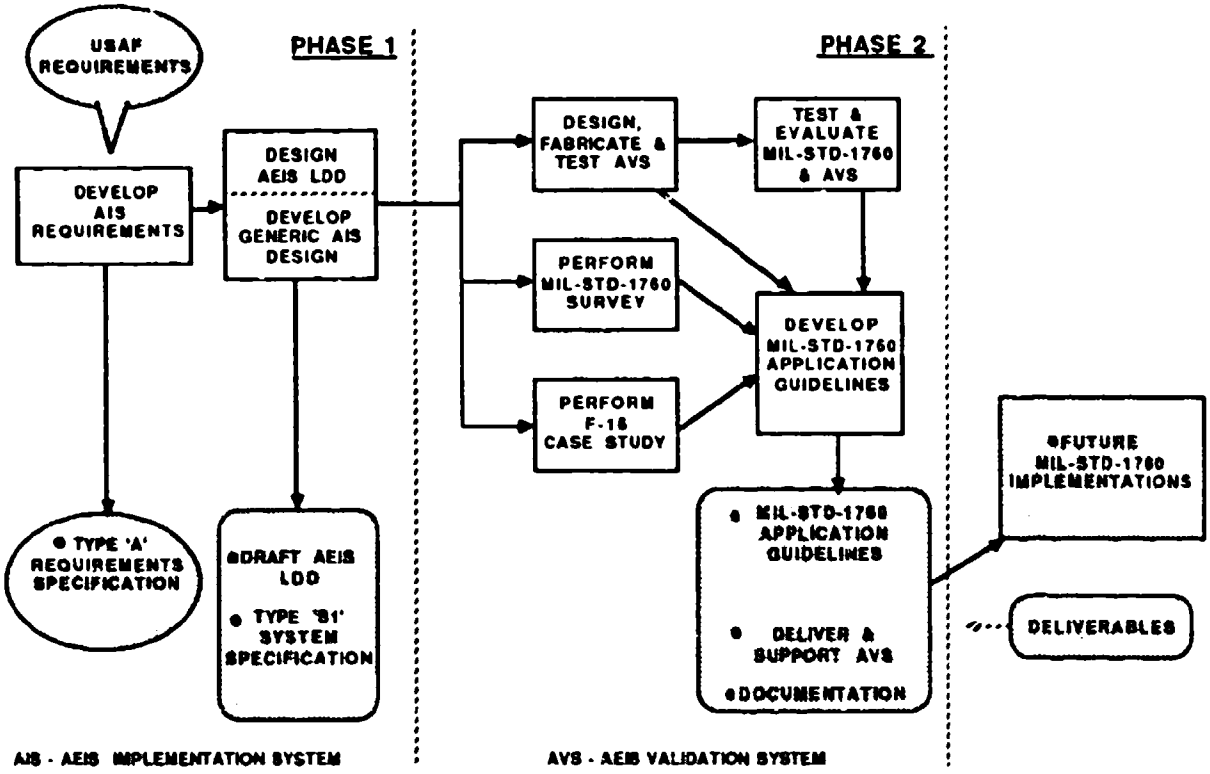

FIGURE 4.2 Overview of CDC AAII Program

4.2.3 Program Schedule The AAII program schedule (figure 4.3) shows the duration and completion dates of each of the principal tasks defined in paragraph 4.2.2.

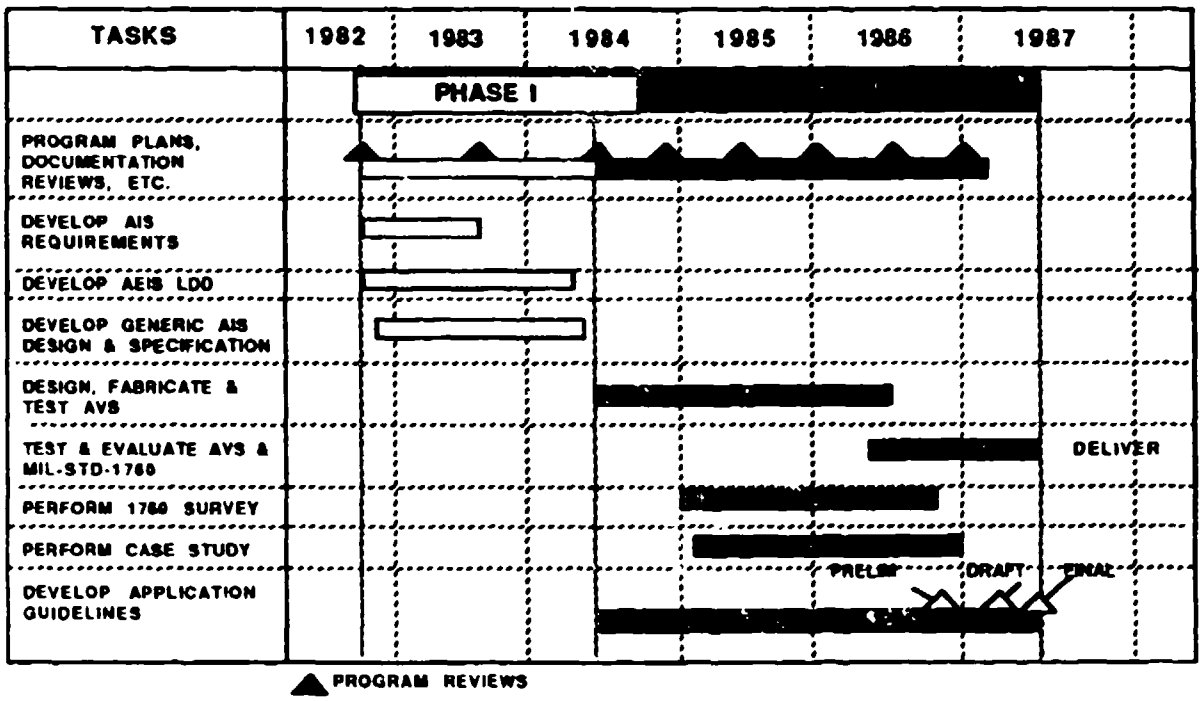

FIGURE 4.3 CDC AAII Program Schedule

4.3 TASK DESCRIPTIONS The following discussion briefly describes the principal tasks undertaken during the AAII program.

4.3.1 Develop AIS Requirements A MIL-STD-490 Type A system requirement specification was developed to define the system functions and characteristics of the AEIS Implementation System. This system is required to control both existing and new (MIL-STD-1760) weapons on existing and future aircraft. The specification was developed from the future Air Force and Navy aircraft mission requirements, as well as a large number of previous related studies, relevant standards and specifications. The specification was used to define the requirements for the subsequent detailed system design activities, as well as providing an input to defining the general SMS requirements for the Pave Pillar program. Figure 4.4 shows the types and quantities of weapons that will be carried on each type of aircraft; these will fulfill the foreseen tactical and strategic missions of Air Force Aircraft. The figure also shows the quantities of MIL-STD-1760 interfaces that will be needed in the future, and as such, forms a prime AIS system design driver.

STORE TYPES / MISSION / AIRCRAFT TYPES		AAM/SHORT RANGE	AAM/MEDIUM RANGE	AAM/LONG RANGE	AGM/ATTACK-RADIATION	AGM/STANDOFF TACTICAL	AGM/STANDOFF TACTICAL (N)	AGM/GROUND SUPPRESSION	AGM/GROUND SUPPRESSION (N)	AIR TO SURFACE MISSILE	AIR TO SURFACE MISSILE (N)	SUBMARINE BOMBS	SUBMARINE BOMBS (N)	ELECTRONIC POD	GUN PODS	DISPENSER BKT/AGM	FLARE/CHAFF	TANK/FUEL	MULTIPLE CARRIAGE STORES	AIRCRAFT STATION INTERFACE	MISSION STORE INTERFACE	ASI + CSSI
INTERCEPTOR COMBAT	1	3	4	8											2		2/2		6	12	18	24
	2	3	4	4	4										1		2/2		4	13	17	21
	3	3	4							1				2					0	7	7	7
GROUND ATTACK	1	4	2				6				12			2	2				6	12	24	30
	2	5	2								12	4		2					6	10	20	28
	3	6	2	2							4			3		2			2	11	13	15
MULTI - ROLE	1	3	4	4	2										1	4	2/2		6	13	19	25
	2	4	2				6				10					2			7	11	20	27
	3	5	2								6	4		2		4			6	10	18	24
	4	1	2	4				2	2				6	2				2	2	18	20	22
DEFENCE SUPPRESSION	1	4	2			6	4							2		1	2/2		6	11	19	25
	2	5	2				4					6		2			2/2		6	10	20	26
RECCE	1	6	2											3				2	0	7	7	7
TACTICAL AND STRATEGIC BOMBER	1	1	4						24								2/2		2	30	32	34
	2	1	4					8	12			8					2/2		2	32	34	36
	3	2	4								96						2/2		14	18	104	118

MISSIONS:

1. Long Range Nuclear
2. Long Range Tactical Bombing
3. Counter Air
4. Close Air Support / Battlefield Interdiction
5. Air Interdiction
6. Reconnaissance

STORES (Abbreviations used)

AAM Air-to-Air Missile
AGM Air-to-Ground Missile
(N) Nuclear Store
ASI Aircraft Station Interface
CSSI Carriage Store Station Interface

NOTE . . . .

All Primary Stations (except for Nuclear Stores Carriage) interface to one ASI

Nuclear Stores are not carried on Multiple Carriage Stores

* 8 Bombs on one Carriage Store

FIGURE 4.4 MIL-STD-1760 Weapon Requirements of USAF Aircraft Types

4.3.2 Design AEIS Logical Design Definition (LDD) Figure 4.5 shows the three elements of MIL-STD-1760, the Physical, Electrical and Logical definitions. The development of the LDD by CDC was undertaken to comply with an LDD Type A specification, and the system requirements defined in the AIS Type A specification. The draft LDD comprised of the major elements shown in figure 4.6. (The LDD, together with its rationale consisted of 391 pages.) It has subsequently undergone revision as the result of Government and Industry review; this process has included the review by the SAE AE-9A Task Group.

4.3.3 Develop Generic AIS Design The task of developing a generic AIS design consisted of studying alternative system architectures which would implement all the system requirements, and then performing trade-off studies to determine the optimum implementation approach. Figure 4.7 illustrates the key factors that influenced the system design, and which resulted in a Type B1 specification defining the central, or generic, functions of an AIS.

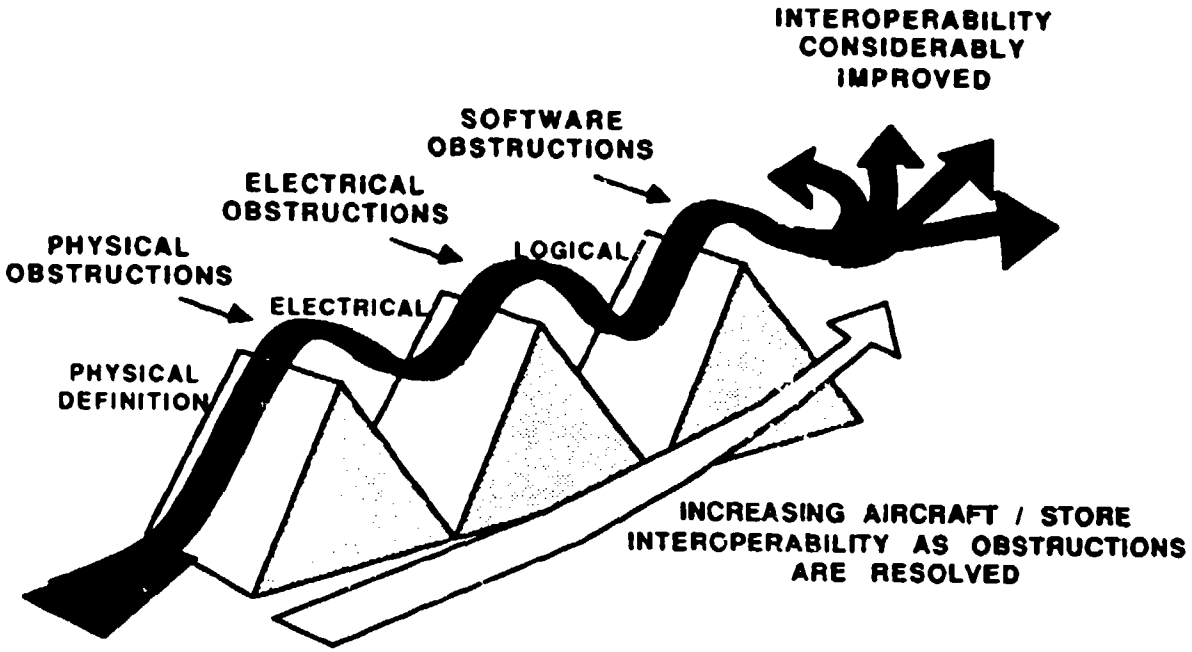

FIGURE 4.5 Elements of MIL-STD-1760

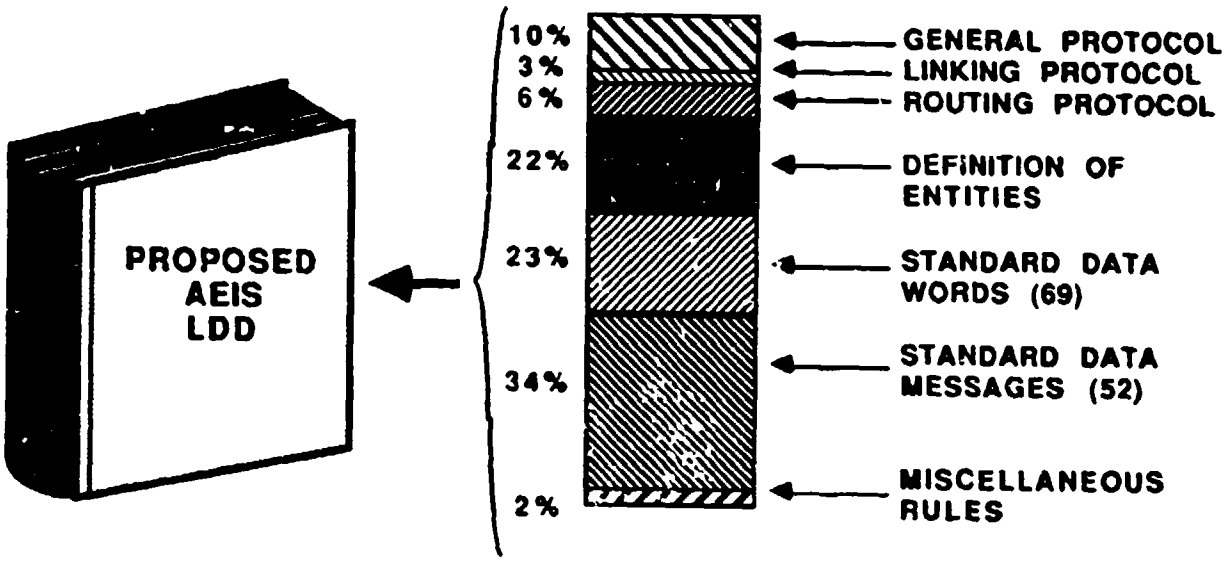

FIGURE 4.6 Page Analysis of Proposed AEIS LDD

4.3.4 Design Fabricate and Test an AEIS Validation System (AVS) and its Test Environment The AVS and its test environment were developed to provide a full MIL-STD-1760 implementation environment which is fully representative of the functional LRU partitioning of an aircraft system. An overall system diagram is shown in figure 4.8, a detailed description of the system is given in section 5.

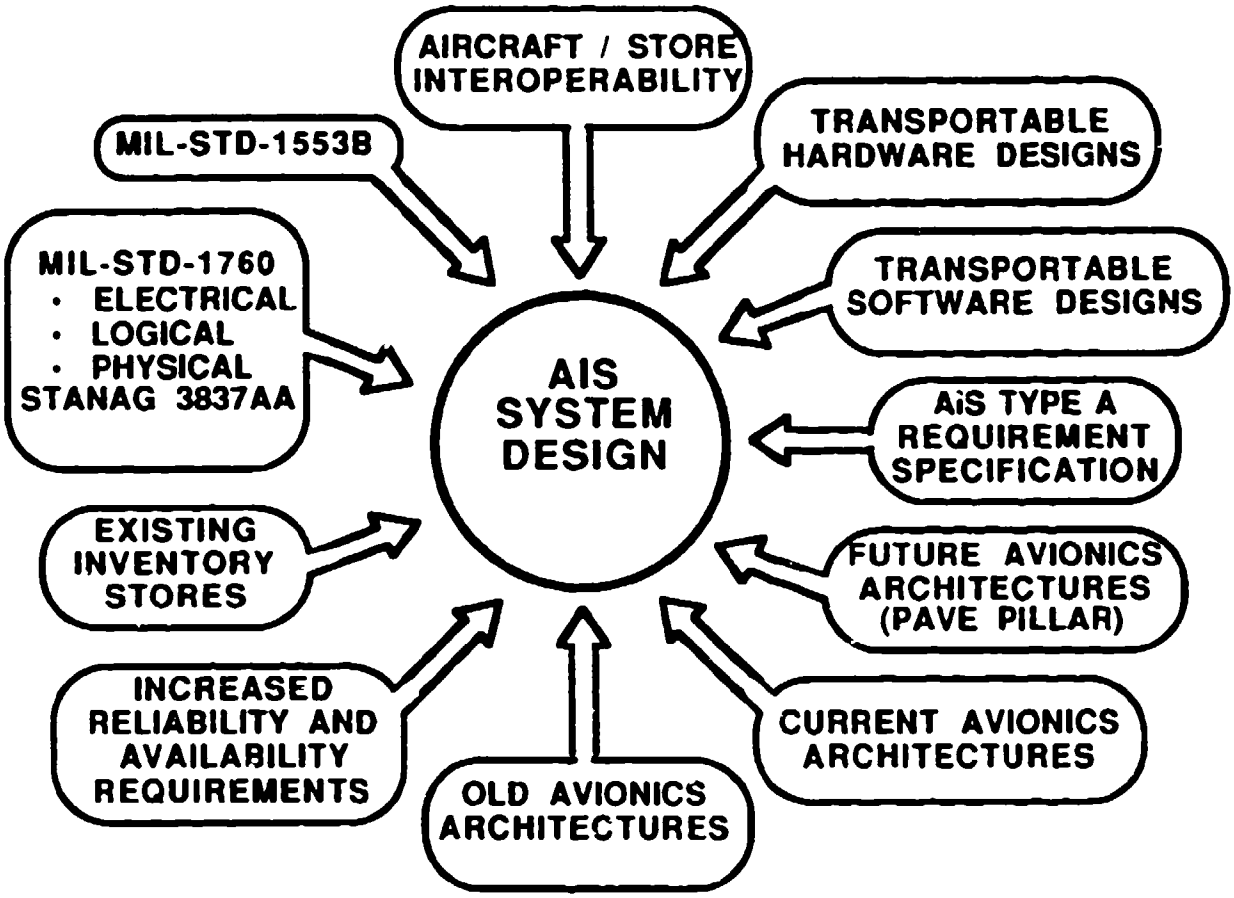

FIGURE 4.7 Factors Influencing the Generic AIS Design

4.3.5 Test and Evaluate MIL-STD-1760 and the AVS The first part of this activity was concerned with testing the AVS and the test system to ensure that the AVS is a valid implementation of all three elements of the standard. It also verified that the standard is implementable in its entirety, and that it contains no inconsistencies. Issues and lessons learned from this process are included in Appendix A. The second part of the task evaluated the standard and the way in which the AVS implemented it. This test and evaluation (T&E) process produced a large number of 1760 implementation issues, and many lessons were learned from the process. The process is described in section 5 and relevant implementation guidance is contained in Appendix A.

4.3.6 Perform F-16 Case Study An implementation case study was conducted on an aircraft representative of a current MIL-STD-1553 avionics architecture. The F-16 C/D was selected as being a stressing case in terms of its physical and performance requirements, and the wide range of new weapons it will carry in the future. The main purpose of the study was to determine implementation issues and guidance relating to incorporating the standard on an existing aircraft, while making the maximum use of the existing weapon management system. The study is described in detail in section 6.

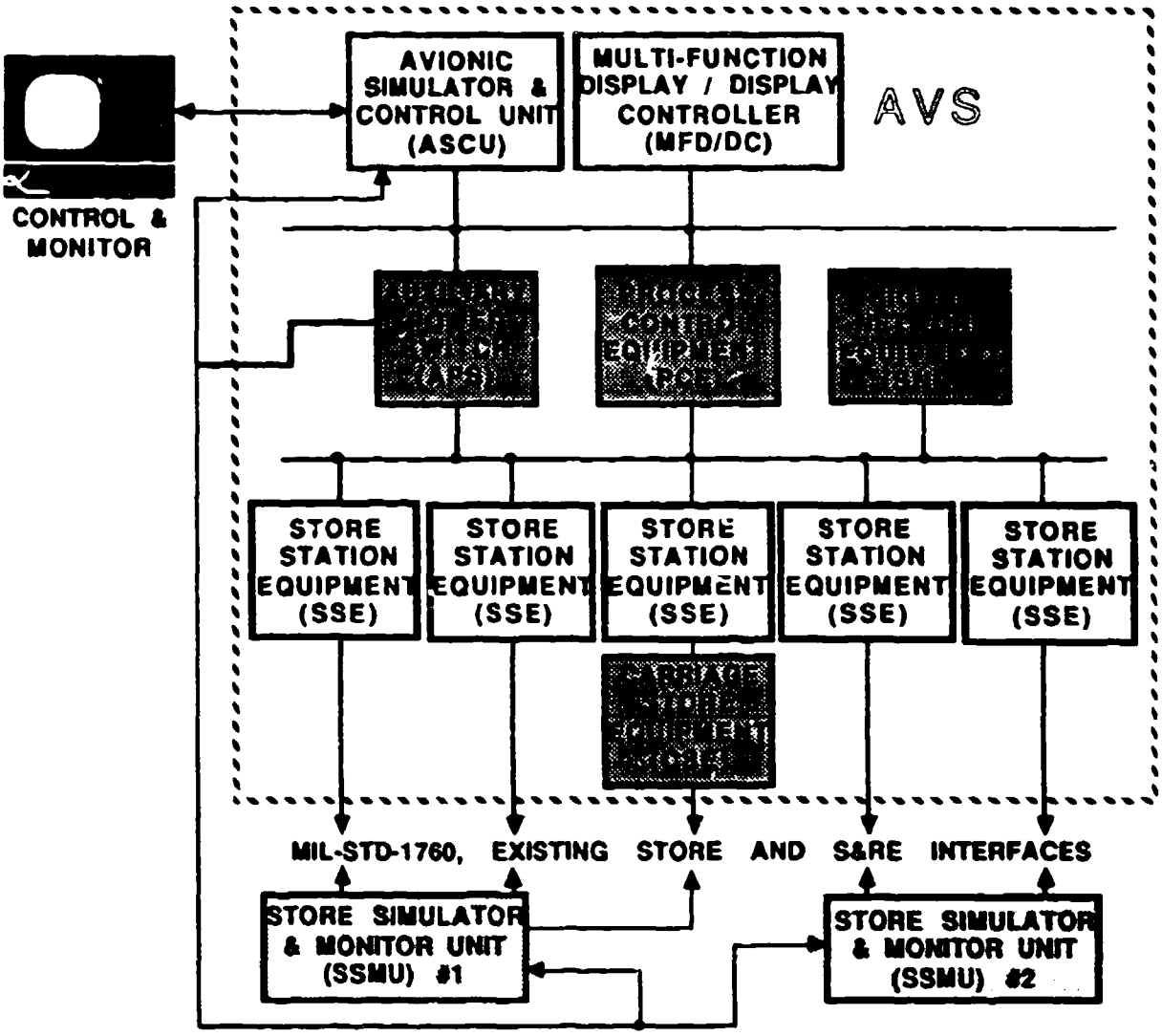

FIGURE 4.8 AEIS Validation System and Test & Evaluation System

4.3.7 Survey of MIL-STD-1760 Implementations This survey identified the implementation status and associated issues of each Air Force aircraft and store program currently planning to implement the standard. The purpose of the study was to determine the implementation factors which these programs have already determined through their experience, and to enable this experience to be incorporated into Appendix A.

4.3.8 Develop Application Guidelines As has already been described in section 1, the MIL-STD-1760 Application Guidelines documents the 1760 implementation experience gained as the result of the program. While describing the particular activities undertaken (in the Application Guidelines Report), Appendix A is structured to present general 1760 implementation issues and recommended guidance for the implementation of MIL-STD-1760 in future aircraft and store programs. The application guidance contained in Appendix A addresses a comprehensive range of specific implementation issues. These have been determined as the result of the wide spectrum of design experience gained during this program.

SECTION 5

DESCRIPTION OF THE AEIS VALIDATION SYSTEM AND THE AVS TEST SYSTEM

5.1 AEIS VALIDATION SYSTEM (AVS) This section provides an understanding of the requirements and design of the AEIS Validation System (AVS) and its use. Design guidance gained from the AVS forms a substantial portion of the guidelines of this document, and an understanding of the AVS is important in using the guidance presented. Sections 5.1 through 5.3 address those three subject areas, namely the:

a. AVS
b. AVS Test System
c. MIL-STD-1760 Test and Evaluation

The AVS equipment is shown in figure 5.1, and in system diagram form in figure 5.2. The overall objective of the AVS was to ensure that a valid AEIS standard is produced. The development of the AVS to support that objective is described below for the following phases:

a. Objectives (Para 5.1.1)
b. Definition (Para 5.1.2)
c. Performance (Para 5.1.3)
d. Interfaces (Para 5.1.4)
e. Design (Para 5.1.5)

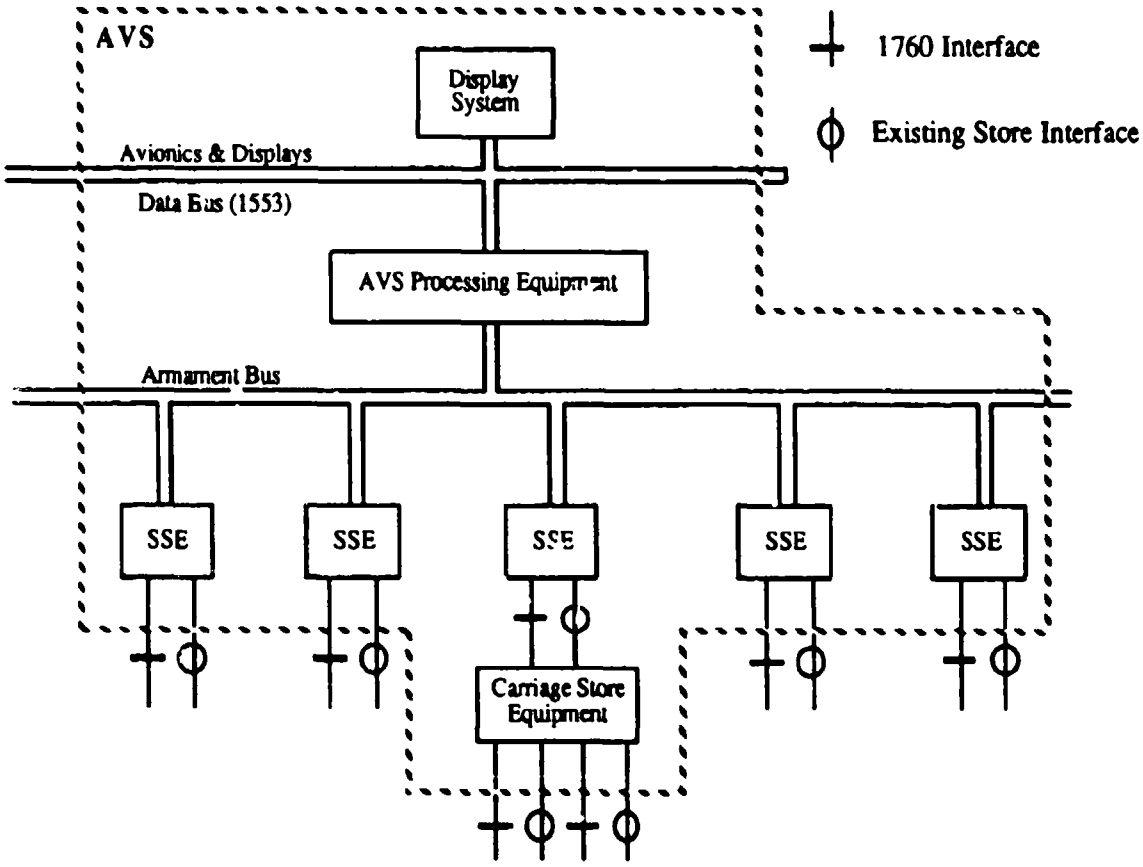

FIGURE 5.1 AEIS Validation System (AVS) being used to Test and Evaluate MIL-STD-1760

5.1.1 AVS Objectives The overall objective for the AVS as stated above was to ensure that a valid AEIS standard is produced. In translating this objective into more tangible objectives, it was defined that the AEIS standard would have two main components:

a. MIL-STD-1760: A military standard which, with notices, defines physical, electrical and logical interface characteristics, (refer to Appendix A sections 4 and 5).

b. Application Guidelines: Providing further interface and implementation details which can be used or mandated on specific contracts.

In ensuring a valid standard the AVS, by implementing MIL-STD-1760, would support both these components. MIL-STD-1760 evaluation of a realistic implementation would enable avoidance of incorrect provisions being included in the military standard. Application Guidelines result from the detailed analysis of the design and implementation features of the AVS. The AVS therefore had specific objectives of:

a. Enabling the demonstration and evaluation of the complete MIL-STD-1760 including the logical element

b. Enabling the demonstration of a MIL-STD-1760 test plan

c. Enabling the preparation of Application Guidelines

d. Implementing MIL-STD-1760 in a realistic system environment

5.1.2 AVS Definition The AVS can be defined principally by the functions it executes. The main function of the AVS is to implement MIL-STD-1760, and it is therefore an AEIS Implementation System (AIS). However, as with all AIS, there are other functions that the implementation will implement. In determining the functions that the AVS would implement, consideration has to be given to three main factors:

a. Costs and Timescales
b. AVS objectives
c. Realistic implementation

The functions of the AVS are, therefore, to provide:

a. MIL-STD-1760 AIS Interfaces:
   - Physical
   - Electrical
   - Logical

b. Existing Store Interfaces

c. Stores Management for:
   - MIL-STD-1760 Air-to-Air Missile
   - MIL-STD-1760 Air-to-Ground Missile
   - MIL-STD-1760 Bomb
   - MIL-STD-1760 Carriage Store
   - AMRAAM
   - AIM-9L Sidewinder
   - MK 82 Bomb
   - Suspension and Release Equipment

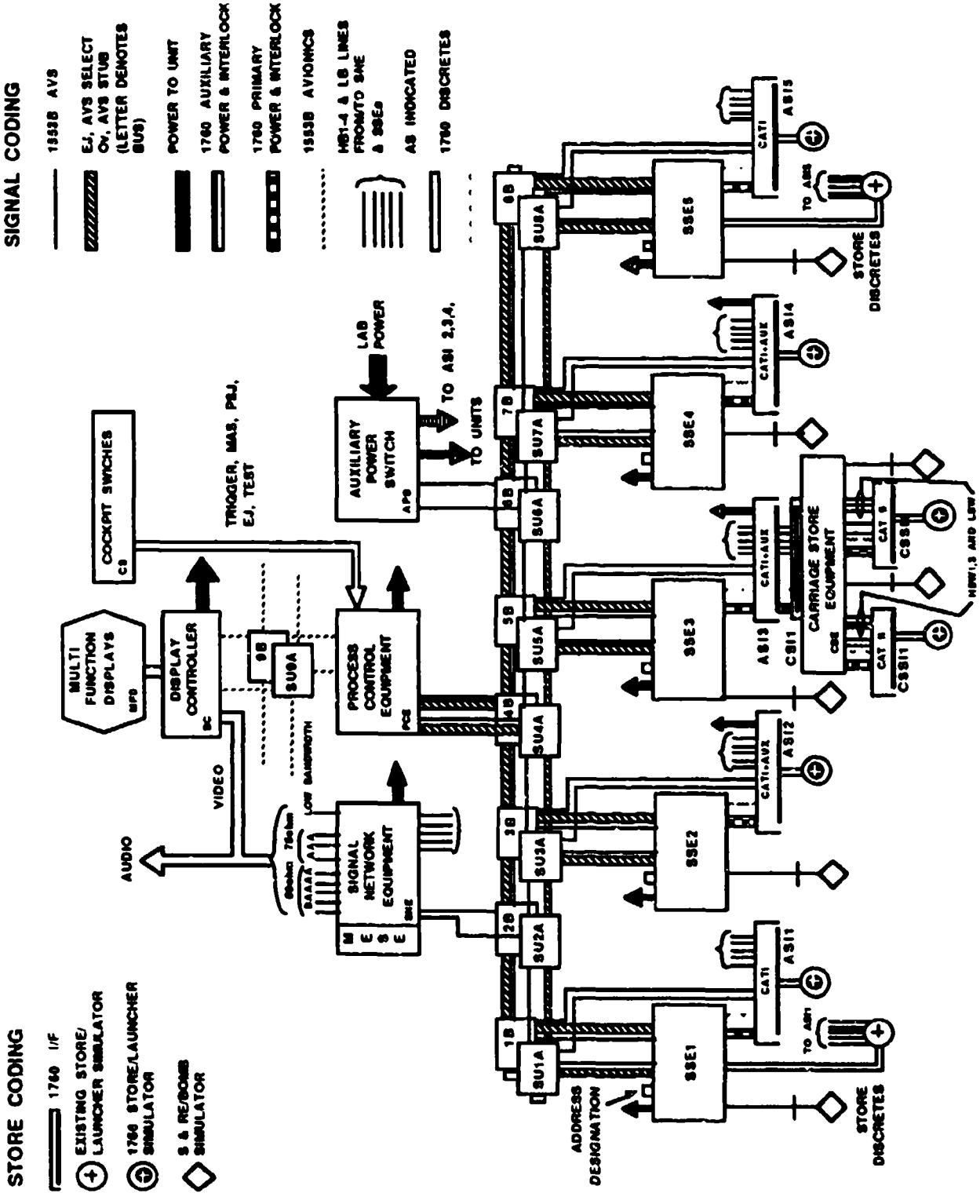

FIGURE 5.2 AVS System Diagram

d. Data Management:

To/from stores
Data Formatting
Data Computation to Store Axes
Interfaces to Stores and Aircraft

e. Stores Management Functions:

Selection
Stores State Control and Monitor
Targeting Control
Arming
Release Management
Selective Jettison
Emergency Management
Inventory
Weapon BIT

f. Crew Interfaces:

Displays
Critical Controls
Non-Critical Controls

g. Miscellaneous:

Aircraft Wiring
Pylon Wiring
Carriage Wiring

Full details of the AVS functions are contained in the references defined in paragraph 2.2, and particularly in the AVS Critical Item Development Specification 182/51/01.

5.1.3 AVS Performance A full definition in this report of the AVS performance would be inappropriate. The AVS specification (reference above) contains all the details. The most relevant areas of the specified AVS performance are listed below.

a. Loadouts The loadouts for the AVS are shown figuratively in figures 5.3 and 5.4. The AVS implements five pylon stations and up to two carriage store stations. Each station has a MIL-STD-1760 interface, a MK 82 Bomb interface and an S&RE interface. The two outboard stations have Sidewinder interfaces capable of full SEAM mode. The MIL-STD-1760 interface classes implemented are:

(1) Class 1A ASI for three central pylons
(2) Class 1 ASI for outboard pylons
(3) Class 2 CSSI for two carriage stations

b. Functional Dependencies The input-output dependencies for all of the AVS functions are specified as for a real AEIS implementation.

c. Data A stressing data transfer and processing performance is specified for the AVS. Processing tasks include conversion between MIL-STD-1760 and non-standard formats, computation of release points, and conversion of target data between aircraft and store axes systems. A full and realistic range of data types is transferred at rates and precisions of typically 25 Hz and 16 or 32 bits, respectively.

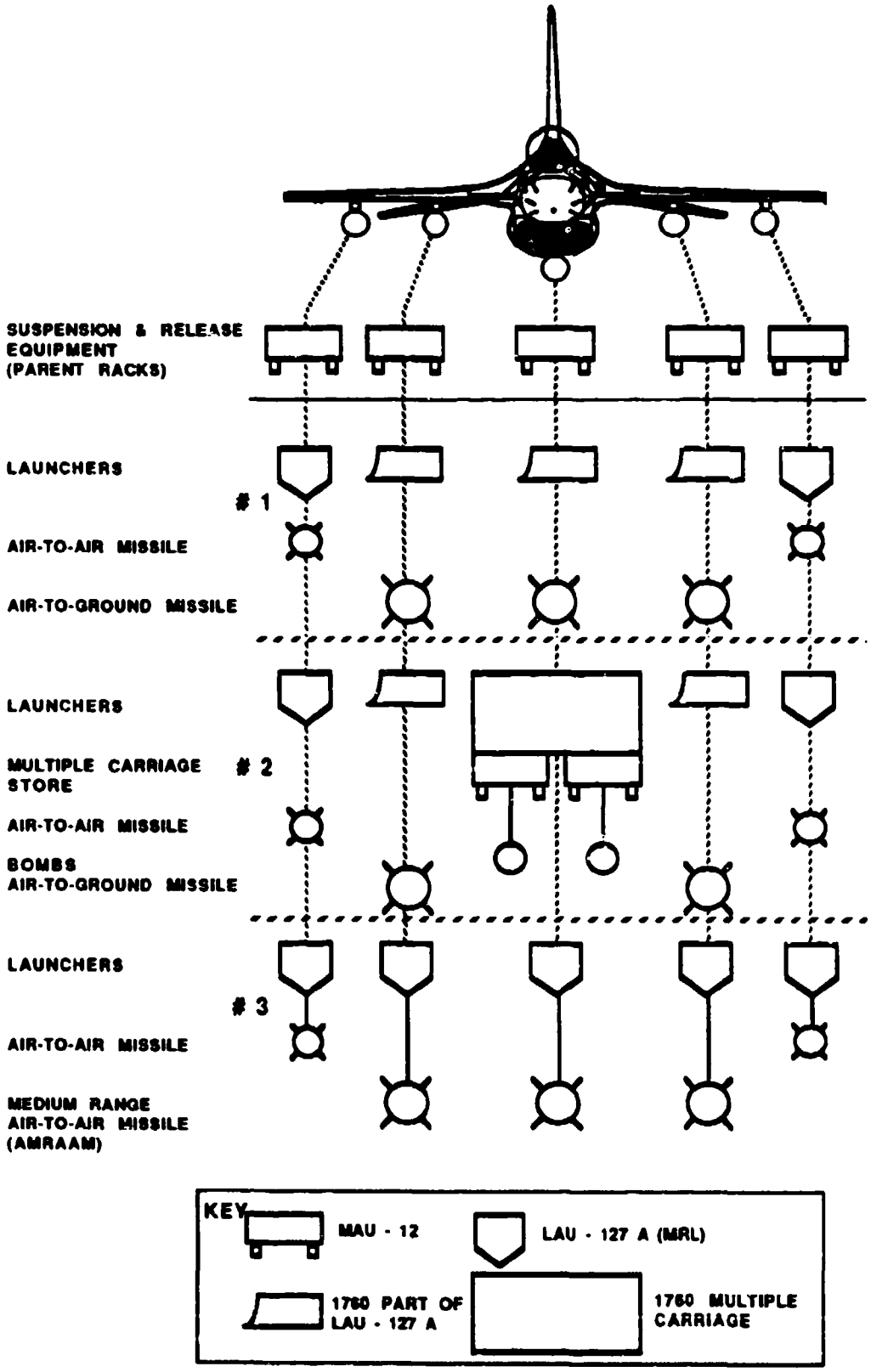

FIGURE 5.3 AVS store loadouts (MIL-STD-1760 Stores)

d. Release/Jettison A realistic performance is specified for both release and jettison. Key points include:

(1) Design representative of single fault immune and 10^{-7}/hour hazard rates.

(2) Release packages definable.

(3) Multiple release modes with release spacings selectable to 10 meters minimum spacing at variable attack velocities.

(4) Separate Selective and Emergency Jettison functions. Both are sequenced and Emergency Jettison is single fault immune.

e. Control/Display A multifunction flexible color control and display interface is specified for the majority of all functions. Critical control is specified by individual controls which include Master Arm, Trigger, Ground Test, Selective and Emergency Jettison demands.

f. Inventory A stressing self-determination of inventory system is specified. The AVS does not have an inventory panel, thereby reducing the represented crew loading.

g. Interfaces All key AVS interfaces are realistic in connector, signal and data terms. (Refer to 5.1.9 below.)

h. Built In Test (BIT) A multimode BIT implementation is specified. BIT coverage is a minimum of 95%. and diagnosis of faults to individual replaceable units is implemented.

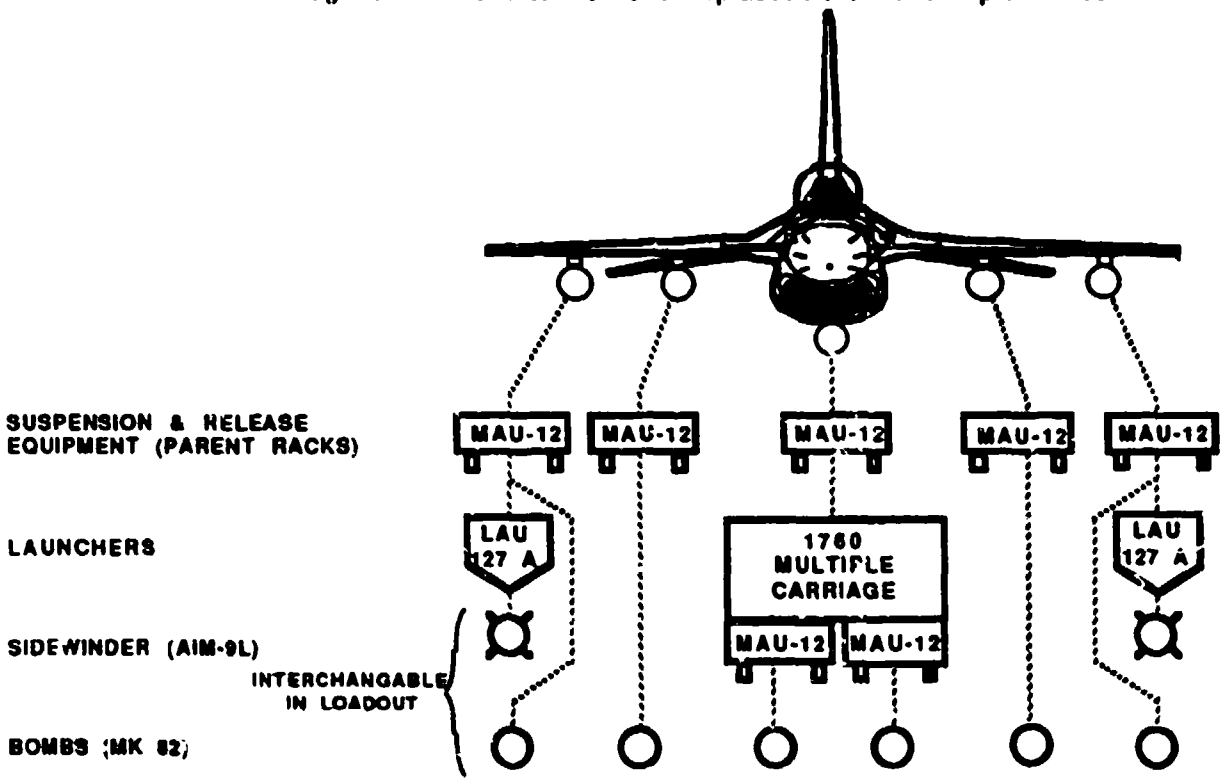

FIGURE 5.4 AVS stores loadouts (existing stores)

i. Environment A ground based laboratory environment is specified to reduce cost.

j. Volume/Mass To reduce cost and provide increased user flexibility, the volume and mass of the AVS are not constrained to flight equipment limits.

5.1.4 AVS Interfaces The AVS implements interfaces with stores, suspension equipment the aircraft and the crew. Key points are listed below.

5.1.4.1 Stores Interfaces

Connectors:	MIL-C-38999
Signals:	MIL-STD-1760
	AIM-9L interface

5.1.4.2 Suspension Equipment Interfaces

Connectors:	Multiple, Circular
Signals:	As MAU-12, Modular Rail Launcher (MRL)

5.1.4.3 Aircraft Interfaces

Connectors:	MIL-C-38999
	Triaxial data bus connectors
	SMA RF connectors
Signals:	115 Volt 3 phase power
	28 Volt DC power (redundant supply)
	MIL-STD-1553 Avionics Data Bus
	9 Analog bidirectional paths

5.1.4.4 Crew Interfaces

Multifunction Display:	Multicolor
	Touch Sensitive
	Multipaged
	Mixed Store Video/Symbol displays
Critical Controls:	Discrete Switches
	Momentary Action (Release, Jettison)
	Two state (Master Arm, Ground Test)
Joystick:	4 way control

5.1.5 AVS Design Three areas of the AVS design are of interest: Functional Partitioning (Philosophy and Implementation), Internal Interfaces, and Key Design Features.

5.1.5.1 AVS Functional Partitioning Philosophy The approaches to partitioning in the AVS are listed below for the main external and internal AVS functions. External functions are concerned with implementing the interfaces which are external to the AVS. Internal functions are those which do not normally directly impact external interfaces.

a. External Functions

(1) Power Switching Medium Power (primary interface) switching up to 10 Amps is distributed to remote units near to the store interfaces to minimize aircraft wiring and

improve EMC. High power (auxiliary interface) switching up to 30 Amps is centralized due to the high volume and excessive power dissipation associated with switching these currents.

(2) Critical Switching Critical Switching is distributed to remote units near to the store interfaces and suspension equipment. This is principally to reduce the EMC hazards associated with long wiring lengths of critical signals. A reduction in aircraft wiring also results.

(3) Analog Network The Analog Network is centralized. This results from the need to keep remote units small, the cost of Frequency Division Multiplex (FDM) systems, the ability to use high bandwidth wires for existing store signals, and the reduction in aircraft wiring that centralized networks provide for most airframes. Figure 5.5 illustrates this comparison. The analog networking is located separately from the main AVS decision processing to allow evaluation of an AIS architecture, with processing integrated into a mission processing system.

(4) AEIS Bus Control Centralized and located with AVS decision processing to reduce delays in state changes and data transfer.

(5) Data Formatting Centralized to reduce the size of remote units.

(6) Existing Store Interfaces Complex signals are centralized to reduce the size of remote units, but are located in a separate unit to the decision processing and data formatting. This enables evaluation of an AIS architecture with processing integrated into a mission processing system. Non-complex generic discrete signals are distributed to remote units to reduce aircraft wiring.

(7) Avionics Interface Centralized to reduce data paths. Data bus interface and analog interfaces are located with the AVS processing and analog networks respectively, for similar reasons.

(8) Displays/Controls Distributed to units representative of cockpit locatable equipments and panels.

b. Internal Functions

(1) Decision Processing A centralized method reduces the data paths and internal bus loadings during time-critical functions, such as multi-store targeting or release.

(2) Built in Test (BIT) BIT mode management and activation are centralized to ensure efficient result collation and overall coordination with AVS functions. The BIT functioning within the remote units and weapons is managed by remote BIT controllers to reduce the central processing load and enhance BIT execution times.

(3) DataBase Centralized for efficient access by the AVS decision processing and data formatting.

(4) Internal Interface Management Centralized and located with the AVS decision processing to provide rapid control and monitor of AVS state.

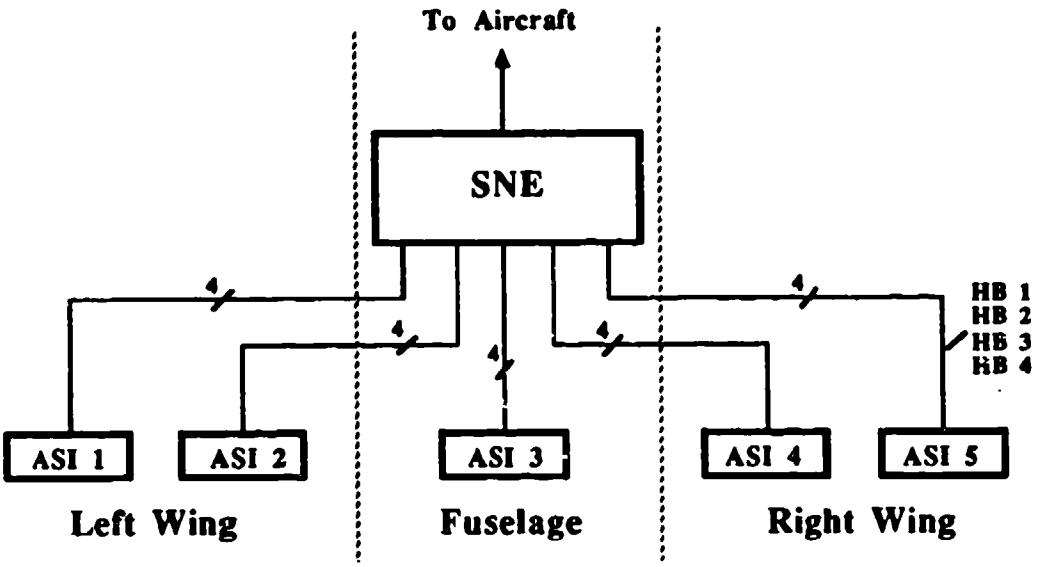

Centralized Network

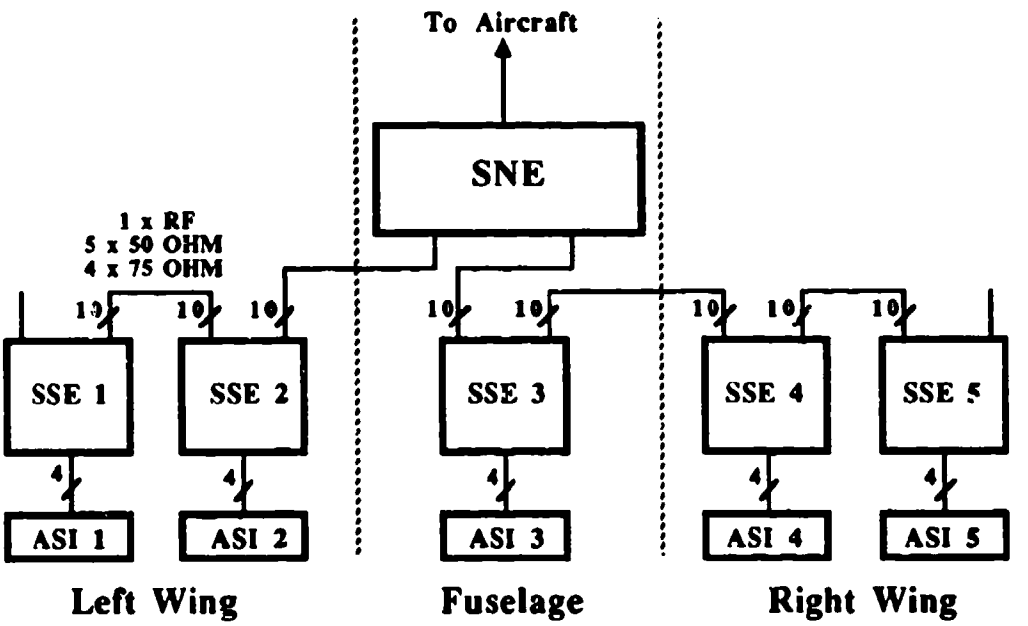

Distributed Network

FIGURE 5.5 Network Comparisons

(5) Power Regulation Distributed to units where regulated power is consumed. This results in lower aircraft wiring than would centralized or part centralized power regulation.

(6) Power Distribution Centralized, but distributed away from the AVS decision processing. This results in lower aircraft wiring than with a totally distributed system, and also allows evaluation of an AIS architecture where decision processing is integrated into a mission processing system.

5.1.5.2 AVS functional partitioning implementation The AVS is shown as a system diagram in figure 5.2. The AVS comprises the following functional components:

a. Process Control Equipment (PCE)
b. Stores Station Equipments (SSE)
c. Signal Network Equipment (SNE)
d. Auxiliary Power Equipment (APS)
e. Carriage Store Equipment (CSE)
f. Display Controller (DC)
g. Multi Function Display (MFD)
h. Stubbing Units (SU)
i. Dedicated AVS Cockpit Switches (EJ, PSJ, TRIGGER, MAS, TEST Joystick)
j. Armament Bus
k. Aircraft Wiring

The functions of these components are described below.

a. PCE Description The Process Control Equipment (PCE) is the main system controller of the AVS. The PCE is defined in specification 182-60-05. It executes the following functions:

(1) Avionics bus interface
(2) Interfacing with critical switches
(3) Armament Bus control (MIL-STD-1553 bus)
(4) Armament bus discrete control with single fault immune EJ function
(5) Store state control and monitor
(6) Store data supply and monitor
(7) AVS LRU state control and monitor
(8) AVS LRU data supply and monitor

b. SSE Description Each Store Station Equipment (SSE) implements the discrete and power interfaces for one pylon. The SSE is defined in specification 182-60-06. It executes the following functions:

(1) Provide the armament bus interface
(2) 115 VAC & 28V DC power for single primary ASI
(3) Release consent generation
(4) MAU-12 S&RE control and monitor
(5) Fuzing signals generation
(6) LAU-127 S&RE control and monitor
(7) Generic discrete input/output
(8) Single fault immune EJ function
(9) Provide fault isolation for overcurrent conditions

c. SNE Description The Signal Network Equipment (SNE) implements the high bandwidth, low bandwidth and existing store interfaces for the AVS. The SNE is defined in specification 182-60-07. It executes the following functions:

(1) Armament bus interface
(2) Interface to HB1, HB2, HB3, HB4 and LB for five ASIs.
(3) Interface to AIM-9L guidance and audio signals multiplexed onto the high bandwidth signals defined above for two ASIs.
(4) Provide avionics analog interface for:
  (a) 1 x 2 GHz bidirectional interface
  (b) 4 x 20 MHz at 50 Ohm bidirectional interface
  (c) 3 x 20 MHz at 75 Ohm bidirectional interface
  (d) 1 x Low Bandwidth bidirectional interface
(5) Provide analog network of (ASI nodes: Aircraft nodes: ASI-ASI paths):
  (a) 5:1:0 2 GHz network
  (b) 20:7:9 20 MHz network
  (c) 5:1:1 Low Bandwidth network
(6) Provide AIM-9L scan function
(7) Provide data conversion between MIL-STD-1760 target data formats and AIM-9L guidance formats.

d. APS Description The Auxiliary Power Switch (APS) implements the power distribution and auxiliary power switching of the AVS. The APS is defined in specification 182-60-08. It executes the following functions:

(1) Armament Bus Interface
(2) Distribute 115 VAC to PCE, SNE, DC, Pylons 1-5
(3) Distribute 28 VDC A & B to PCE and Pylons 1 - 5
(4) Provide switched MIL-STD-1760 Auxiliary Power to ASI 2,3 & 4
(5) Monitor Power
(6) Provide fault isolation for overcurrent conditions.

e. CSE Description The Carriage Store Equipment (CSE) is the simulated implementation of the electronics of a MIL-STD-1760 twin store carrier (or multiple ejector rack). The CSE is defined in specification 182-60-09. It executes the following functions:

(1) CSI Interface to MIL-STD-1760 ASI (Primary and Auxiliary)
(2) Provide two MIL-STD-1760 Class II CSSI interfaces
(3) Control and monitor for two MAU 12 S&RE
(4) Fuzing signals generation
(5) MIL-STD-1553 routing between CSI and CSSI
(6) High bandwidth and Low bandwidth networking between CSI and CSSI
(7) Power switching and fault isolation to CSSI

f. DC Description The Display Controller (DC) implements the interface between the cockpit mounted multifunction display (MFD) and the avionics bus. The DC is defined in specification 182-60-10. It executes the following functions.

(1) Avionics Bus Interface
(2) MFD interface
(3) Joystick interface

(4) Three channel (RGB) video to STANAG 3350 Class II to MFD with approximately 500 x 240 cell resolution
(5) MFD touch sensitive data interface
(6) Power to MFD
(7) Symbol generation
(8) Control demand formatting
(9) Video input (of AGM video)

g. MFD Description The Multifunction Display (MFD) implements the main control and monitor interface of the AVS. The MFD is defined in specification 182-60-11. It provides the following functions.

(1) RGB driven multicolor display surface with STANAG 3350 Class B video
(2) 20 x 24 cell touch sensitive surface using infrared light beams
(3) Interface to Display Controller (DC)

h. Stubbing Units Definition Two types of stubbing units are used in the AVS: Avionics Stubbing Units (AvSU) and Armament Bus Stubbing Units (SU). They implement the stubbing functions required on each bus to reduce the aircraft wiring. The stubbing units are defined in specification 182-60-12. The AvSU is required to implement a transformer coupled single bus stub to MIL-STD-1553. The SU provides the following functions:

(1) Two transformer coupled single bus stubs
(2) Single stubbing of EJ, EJ* and SMS Select Signals
(3) Structure Ground Signals

i. Cockpit Switches The AVS implements interfaces to five external switches simulating cockpit switch functions. These switches are defined as:

(1)	Trigger	(TRIG)
(2)	Pilot Selective Jettison	(SJ)
(3)	Emergency Jettison	(EJ)
(4)	Master Arm	(MAS)
(5)	Ground Test	(GND TST)
(6)	Joystick	

All switches, except the joystick, are designated as critical switches, and they interface to the PCE. They are, except the joystick, two pole double throw with six contacts. The joystick is a single pole four way switch to enable movement of a parameter in one of four directions.

5.1.5.3 AVS Internal Interfaces The key details of AVS internal interfaces relate to the areas of connectors, power interfaces, digital interfaces, discrete signals and analog signals.

a. Connectors In accordance with USAF policy, good design and high EMC/EMP performance, MIL-C-38999 connectors are used for all AVS unit interface with 3 exceptions:

(1) Triaxial connectors for data buses.
(2) SMA connectors for 2 GHz signal paths.
(3) High Power input connectors to Auxiliary Power Switch (APS).

b. Power Interfaces Power interfaces between AVS units are 28 Volt and 115 Volt 3 phase to MIL-STD-704 voltages.

c. Digital Interfaces MIL-STD-1553 is used as the transfer mechanism for most AVS internal data. Other candidate systems such as non-standard serial data bus, High Speed Data Bus (HSDB) or Pi Bus were rejected on the basis of either lack of applicability to future implementations, or lack of current support equipment.
Communication between the PCE and the Display System is consolidated with the avionics data bus, and all other inter-unit communication is consolidated with the armament data bus. This reduces hardware, software and aircraft wiring.
Data Bus protocols are determined by the other users of the buses (that is the Avionics and the Armaments systems).
Data transferred internally includes control, monitor, target position, system time and BIT information.

d. Discrete Signals The use of discrete signals internal to the AVS is minimized to reduce aircraft wiring and to support the use of standard data bus interfaces. Some data elements are selected to be transferred as discrete signals for reasons of either reduced complexity or safety. Examples include:

(1) SMS selects (Safety-Critical Enable)
(2) Emergency jettison demand

e. Analog Signals No analog signals are transferred between AVS units in normal use. Analog signals are transferred between the external interfaces and the analog network. The AVS can be configured to display weapon targeting video on to the display system.

5.1.5.4 AVS Key Design Features Full detail of key AVS design features is included in Appendix A with its supporting rationale. The key features of the AVS design (as opposed to specification), not described above are:

a. Software designed and written in Ada (MIL-STD-1815).
b. Highly generic software architecture with reusable packages, automatic loadout identification and configuration of data processing.
c. Back-up hardware guard systems to prevent critical hazards due to software failures.
d. Mixed technology safety-critical switching.
e. MIL-STD-1760 signal lines utilized for existing store interfaces.
f. MIL-STD-1760 protocols and formats used for internal control and monitor.
g. MIL-STD-1553 interface designs optimized for MIL-STD-1760 protocols.

5.1.5.5 PCE Functional Design Refer to figure 5.6 PCE Block Diagram, while reading this paragraph. The Avionics RT board provides a dedicated MIL-STD-1553-to-shared memory and shared memory-to-MIL-STD-1553 interface to the aircraft Avionics bus. The Avionics processor provides the interpretation and reformatting of the avionics data which is communicated via shared memory to and from the SMS processor. The avionics data includes targeting information and MFD selection data. The SMS processor provides the formatting of stores management data into LDD format for 1760 store control and appropriate formats for existing stores control. The MIL-STD-1553 message data is passed via shared memory to the Armaments Bus Bus Controller. This contains a 68000 microprocessor which ensures correct sequencing of message transfers on the armaments bus. For safety critical message transfers the appropriate safety critical codes are accessed from the EJ controller board. The safety critical codes are hardware interlocked to the appropriate cockpit switches to enhance system safety. The EJ controller board provides single fault immune Emergency Jettison function, SMS relay drives and the cockpit switches interface. The 128Kx16 battery backed up RAM is provided for program and data memory use by the SMS processor, the Avionics processor and the Bus Controller processor. The VME Arbiter is the VME bus management controller which prioritizes VME bus accesses for the three processors in the PCE.

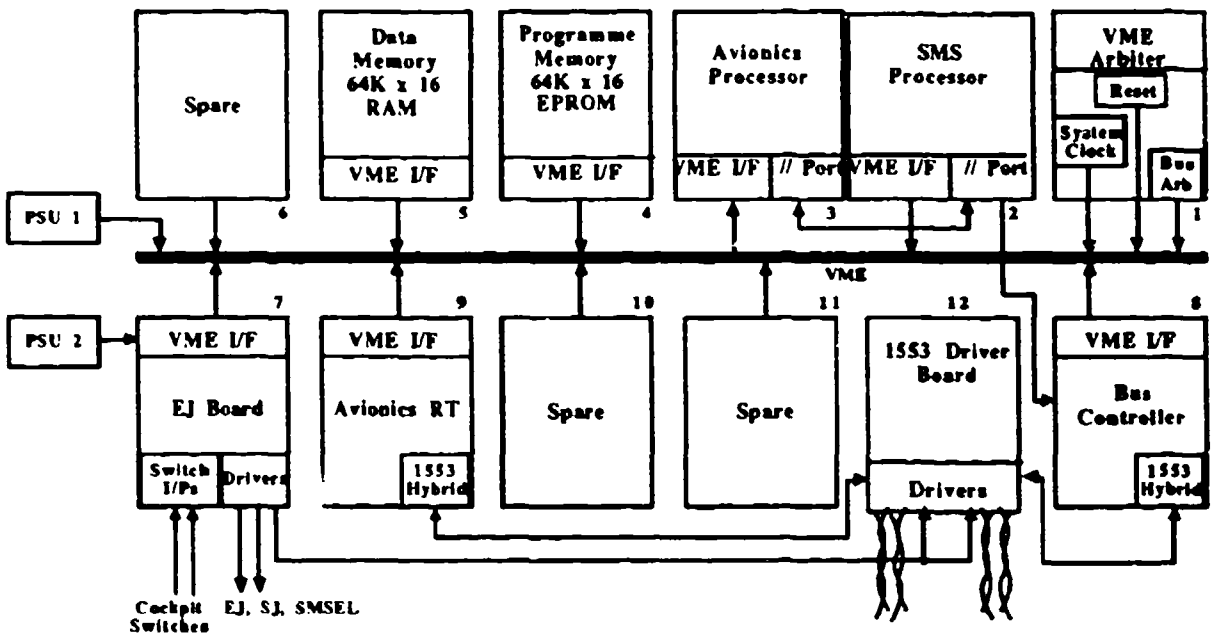

Figure 5.6 PCE Block Diagram

5.1.5.6 SSE Functional Design Refer to figure 5.7, SSE Block Diagram, while reading this paragraph. The General Purpose RT PCB provides the MIL-STD-1553 armaments bus interface to the dedicated hardware latches and monitors of the SSE circuitry. A modulo 2 with shift left, checksum check is carried out on all incoming messages and coded up on all outgoing messages. The safety critical output information contained in subaddress 11 messages, words 3 and 4 is passed to the Safety Critical Checker PCB, where code, sequence and parity checks are performed. If the checks are successful the 1760 store state descriptors are latched into the Safety Critical Driver PCB. The Safety Critical Checker PCB also provides the 28V discrete input interface from the S & RE connectors. The Safety Critical Driver PCB provides dual channel drives for the safety critical outputs, as well as single channel drives for the power output switches. Single fault immune EJ is ensured by the use of discrete EJ inputs as well as MIL-STD-1553 initiated EJ. A Ov discrete input monitor interface is provided from the S & RE connectors. The Relay and FET modules contain the output switches for the safety critical and power outputs. The Switch Monitor PCB provides passive monitors for all stages of the safety critical output path to ensure maximum fault isolation. The interpretation of the monitors is carried out by the SSE Processor PCB which is outside the safety critical path for reasons of safety, but which does have a veto to disable all safety critical outputs in the event of an unsafe condition occurring. EJ is still possible via the discrete EJ inputs however and cannot be disabled by the processor. The processor has the ability to fully exercise the safety critical path during IBIT, but hardware interlocks are provided to ensure that unsafe conditions cannot occur. The processor PCB also provides the 28v and Ov discrete output drives. The PSU module provides dual channel supplies for the EJ function to ensure single fault immunity to a single supply loss.

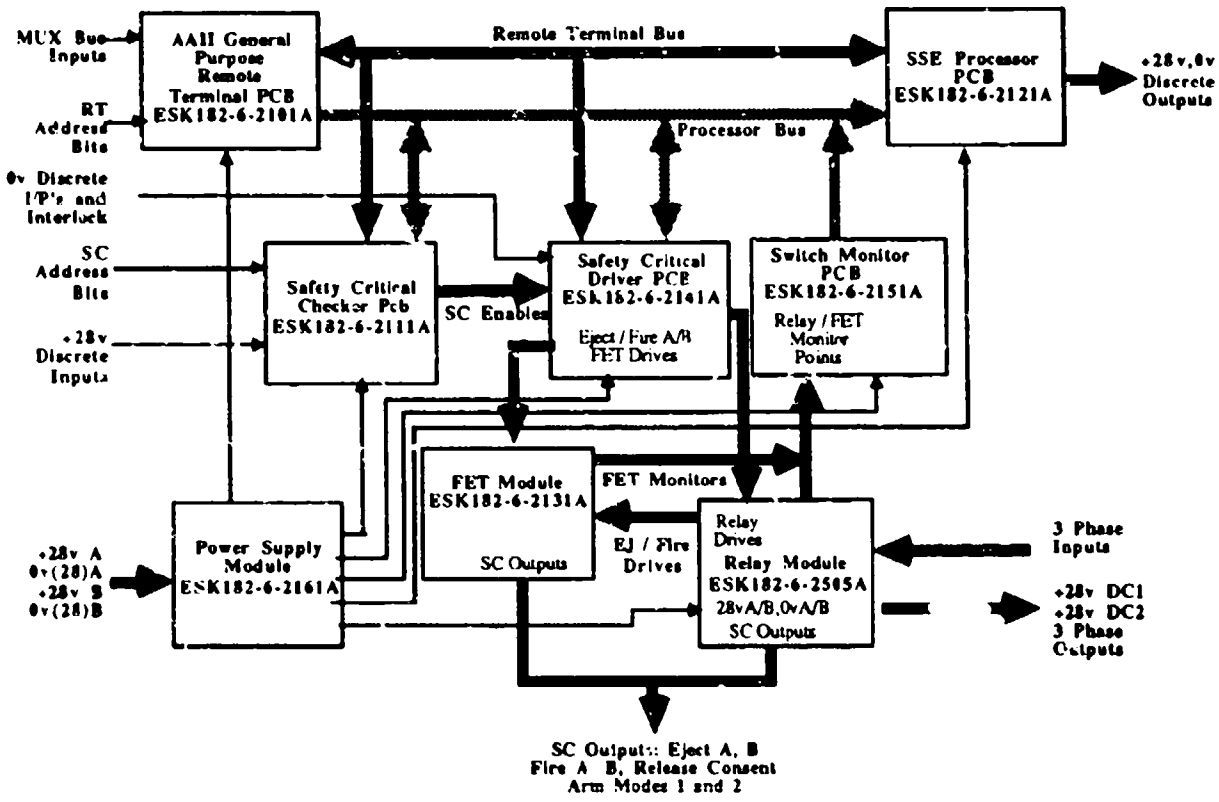

Figure 5.7 SSE Block Diagram

5.1.5.7 SNE Functional Design Refer to figure 5.8 SNE BLOCK DIAGRAM, while reading this paragraph. The Remote Terminal PCB provides a dedicated MIL-STD-1553 to shared memory and shared memory to MIL-STD-1553 interface to the aircraft armaments bus. The SNE processor provides the interpretation and reformatting of the data including system time, targeting data and network control. Sidewinder control, including full SEAM mode implementation is provided by the Sidewinder PCB controlled via the processor for ASIs 1 and 5. The four Network PCBs and RF module provide for full Class I 1760 networking on all ASIs and the Aircraft Interface. Networking of sidewinder signals for ASIs 1 and 5 is handled using HB1, HB2, HB4 and LB signals.

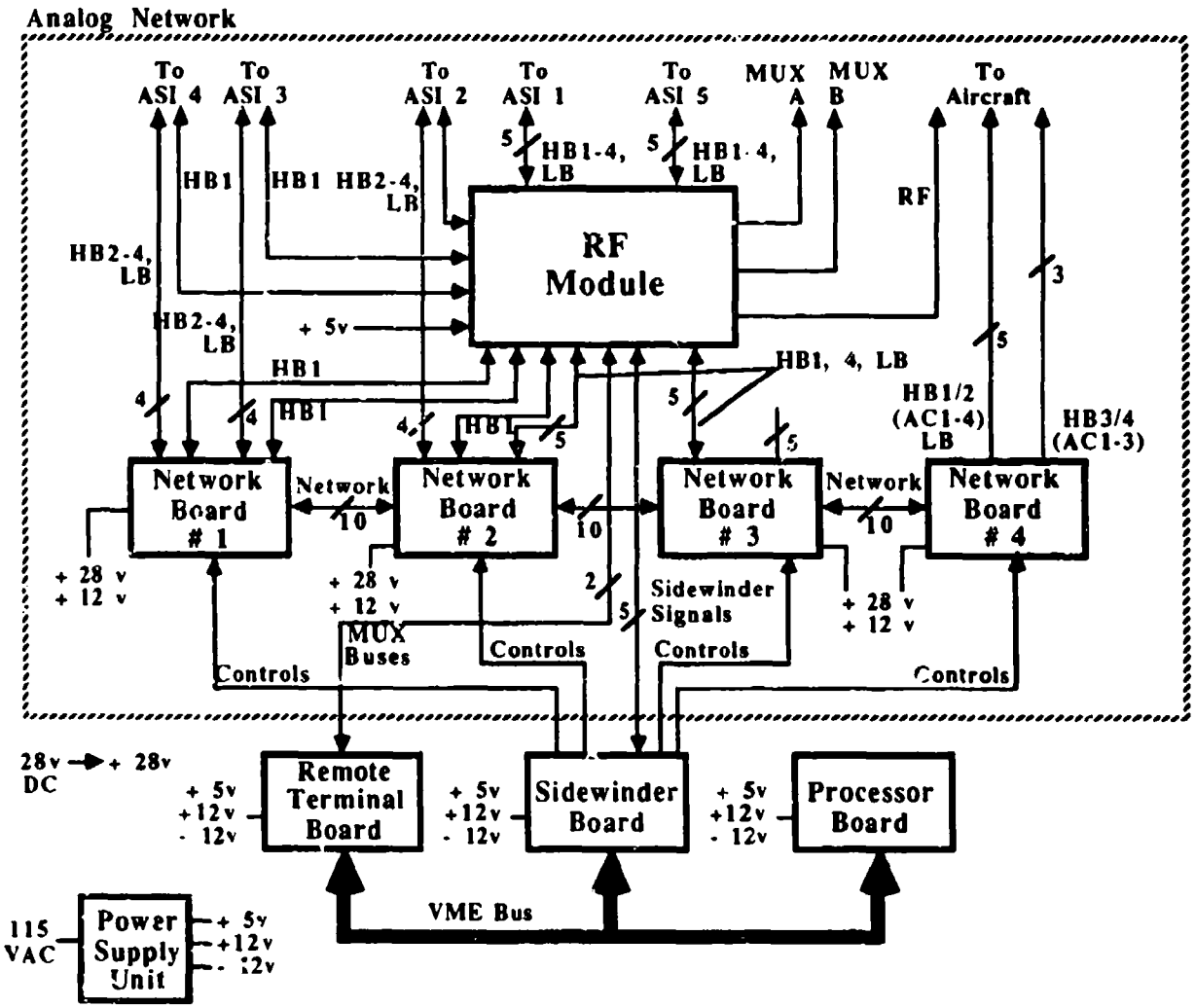

Figure 5.8 SNE Block Diagram

5.1.5.8 APS Functional Design Refer to figure 5.9 APS BLOCK DIAGRAM, while reading this paragraph. The APS RT provides a dedicated interface to the MIL-STD-1553 armament bus. Each incoming message is verified using a modulo 2 with shift left checksum check, before being latched into dedicated circuitry on the Driver Monitor PCBs. All outgoing monitor messages have a modulo 2 with shift left checksum coded into them before transmission. The Driver Monitor PCBs provide relay drives for the Auxiliary output power relays for ASIs 2, 3 and 4 as well as monitors of APS supplies for fault determination. This information is interfaced to the PCE since no processing intelligence exists within the APS. Circuit breakers are provided on the Auxiliary outputs to provide overcurrent protection under fault conditions at the ASI. The APS provides power distribution to other AVS units, which is separately fused, to enable degraded system performance in the case of one or more units developing an overcurrent fault.

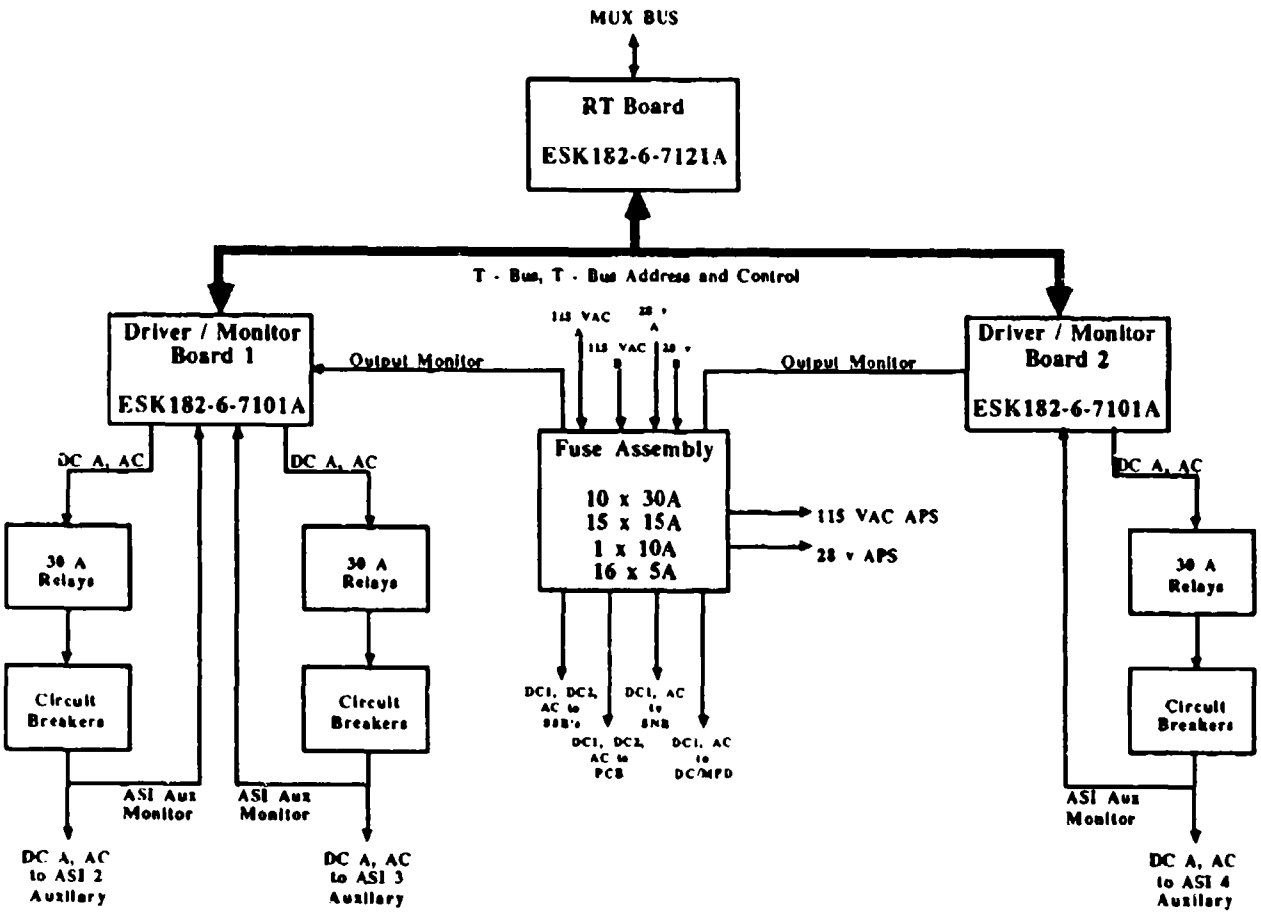

Figure 5.9 APS Block Diagram

5.1.5.9 CSE Functional Design Refer to figure 5.10 CSE BLOCK DIAGRAM, while reading this paragraph. The CSE contains the following boards which perform identical functions to those in the SSE except that they control two CSSIs. (Further information in 5.1.5.6). RT PCB, Safety Critical Checker, Safety Critical Driver, Relay and FET Modules and Switch Monitor PCBs. Additionally they perform Auxiliary Power switching. The Dual Port Ram PCB is the 1553 message store into which all MIL-STD-1553 messages received are placed. The Processor PCB reformats the appropriate messages to the CSSIs and receives messages from the CSSIs to be passed back to the Armaments bus RT via the Dual Port Ram. The Processor PCB also carries out BIT checks on the majority of the hardware to provide maximum fault isolation capability. The Bus Controller PCB controls transactions on the CSSI MIL-STD-1553 bus under the control of the Processor as described above. The CSSI, Bus and Misc. PCB contains the CSSI bus and stub components including MIL-STD-1553 drivers and transformers. It also provides switching for a Class II 1760 Analog interface to the two CSSIs X and Y.

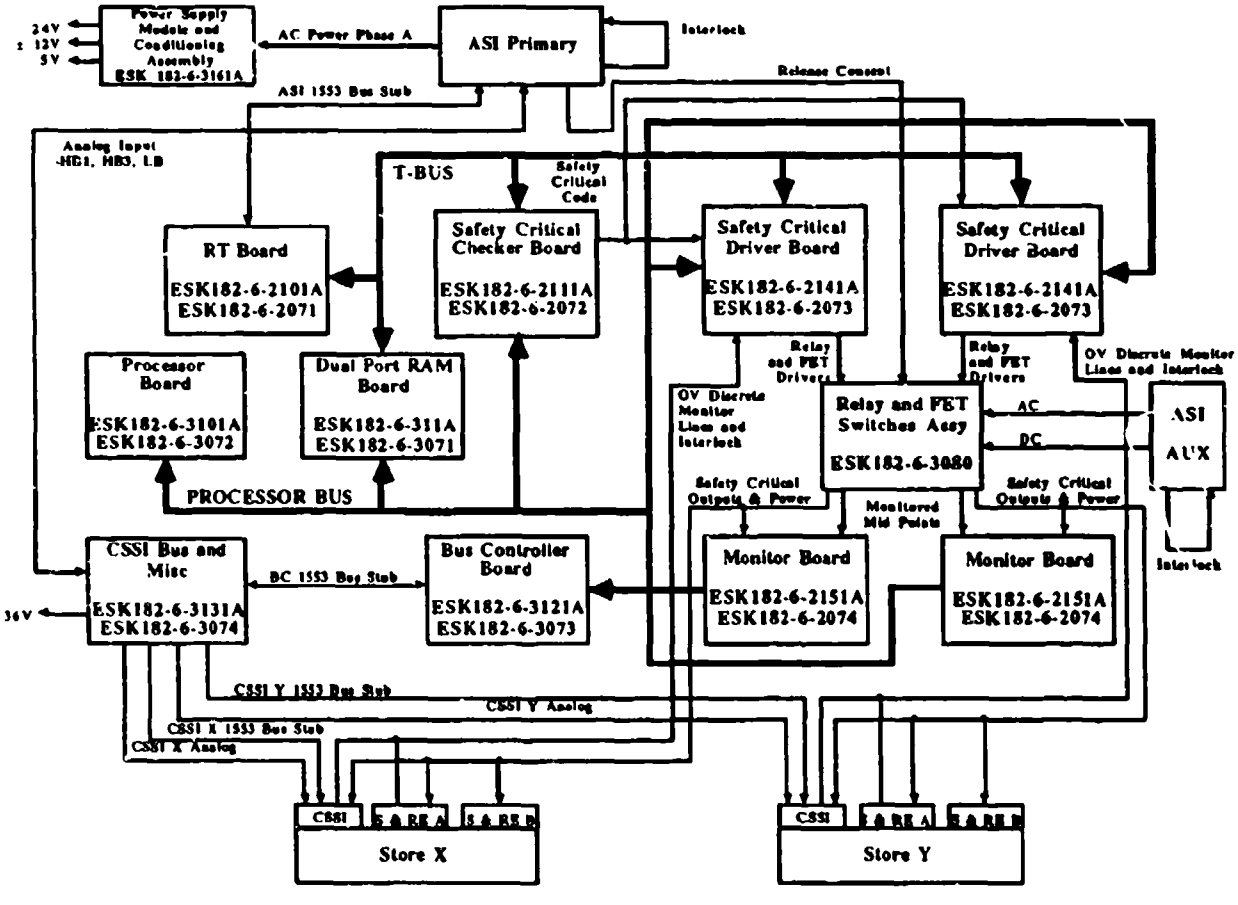

Figure 5.10 Carriage Store Equipment Block Diagram

5.1.5.10 DC Functional Design Refer to figure 5.11 DC Block Diagram, while reading this paragraph. The MIL-STD-1553 RT PCB provides the interface to the aircraft avionics bus. Screen display information and handshaking is provided via the MIL-STD-1553 avionics bus and passed to the Control Processor. The Control Processor interprets the information and formats appropriate graphics commands which are passed to the ANGUS PCB. The Control Processor also interprets the touch sensitive infrared switch presses for transmission via the avionics bus to the PCE. The ANGUS PCB is a high level graphics control processor which interfaces to the 48K byte Video Store Controller, which contains the pixel display information. The Address Output Generator PCB controls the outputting of video information from the video ram to the Video Output PCB. The Video Output PCB contains the color patette, gray scale generator, RGB output DACs and external video input mixing circuitry. The RGB output is used to drive the MFD directly.

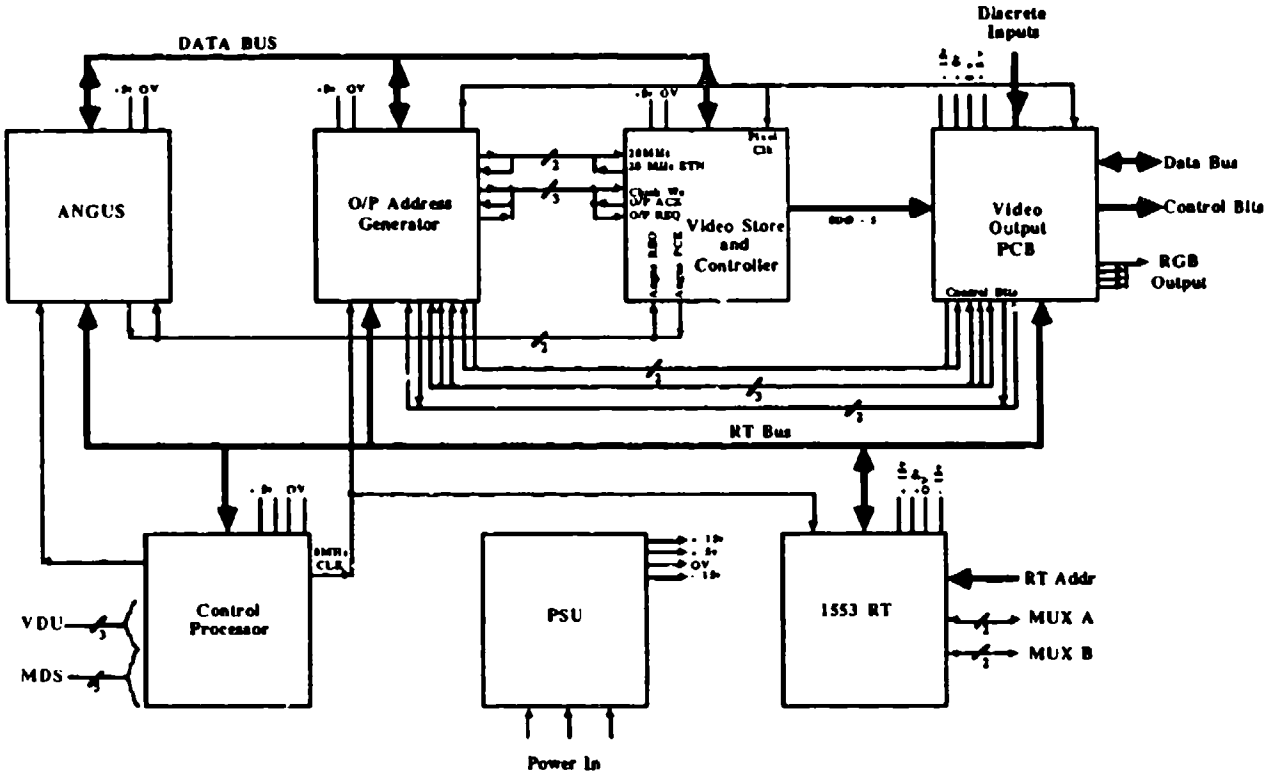

Fig 5.11 Display Controller Block Diagram

5.1.5.11 MFD Functional Design Refer to figure 5.12 MFD Block Diagram, while reading this paragraph. The MFD provides the appropriate circuitry required to take an external RGB input with sync on green and provide all drive signals to control the color CRT. The Infrared Overlay and Control Electronics are self strobing but interrogation control and response is provided via the Display Controller.

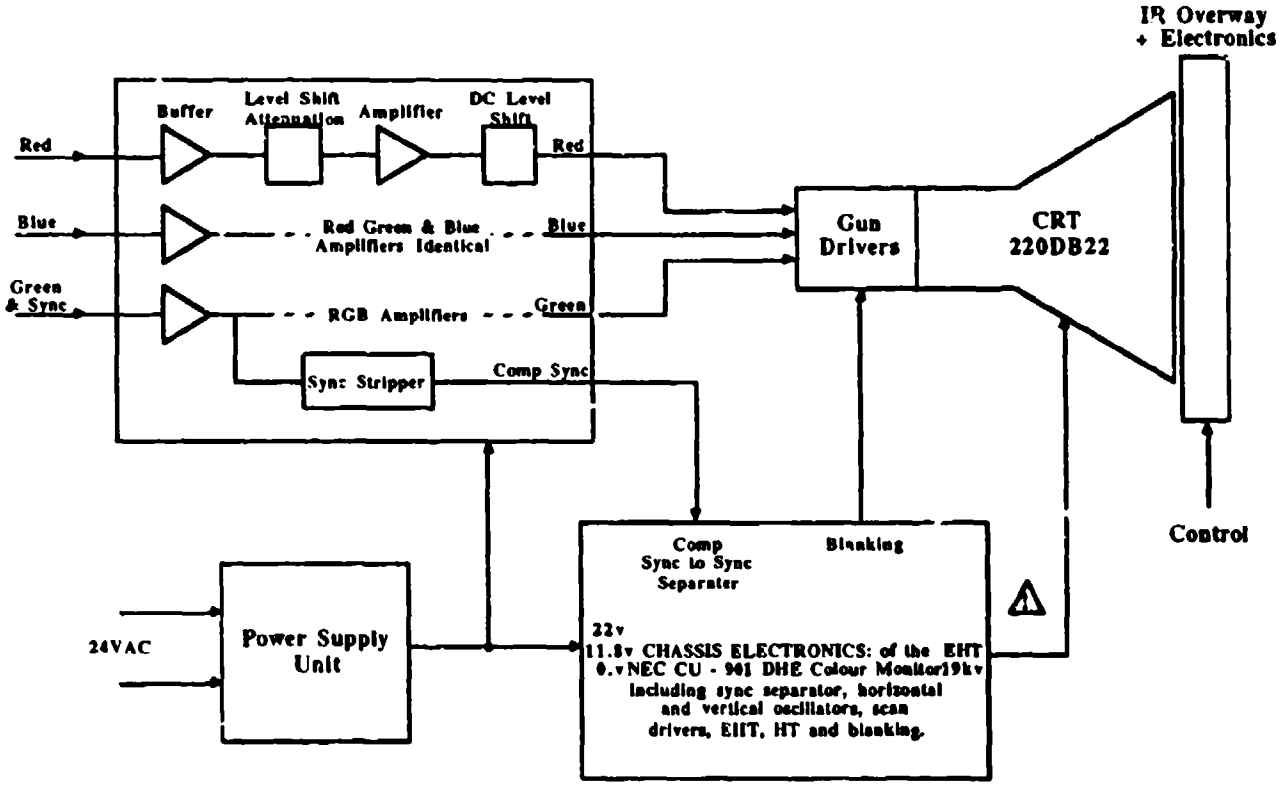

Figure 5.12 MFD Block Diagram

5.1.5.12 SU Functional Design There are two types of Stubbing Units, the Avionics SU and the Armaments SU. The Avionics SU provides for a continuation of the avionics bus with a single, transformer coupled stub being provided to the equipment in question. The Armaments SU provides for a continuation of the armaments bus with two, transformer coupled stubs being provided to the equipments in question. The Armaments SU also provides for the busing of the discrete signals EJ, EJ. and SMS SELECT, with a single stub-off of each of these signals to the equipment concerned. In each case two stubbing units are required at each RT station to provide A and B channel MIL-STD-1553 buses.

5.2 AVS Test System

5.2.1 General The AVS Test System is shown in figure 5.13. The Test System supports achievement of the overall AVS objectives by enabling the AVS to be used. This requires simulation of all the equipments and functions that are external to the AVS and which are interactively managed by the AVS.

5.2.1.1 AVS Test System Overview The AVS Test System (AVSTS) comprises of an Avionic Simulator and Control Unit (ASCU) and a Store Simulator and Monitor Unit (SSMU). The AVSTS interfaces to the AVS as shown in figure 5.1, and has the functions as shown in figure 5.13 (AVSTS Block Diagram). The ASCU consists of two processors, which have the following functions:

a. Processor A - provides the avionics simulation, target simulation and interface to the operator.

b. Processor B - provides the communications between processors A and the SSMU.

Avionics and targeting information is provided via the Bus Controller Unit, which acts as the Bus Controller on the MIL-STD-1553 Avionics Bus, interfacing to the AVS. EJ and SMS Select discretes are also provided by the AVS to the ASCU. Processor A interfaces also via an RS232 link, to a control and monitor VDU, which enables the operator to control set up of the AVS and monitor the state of the AVS during operation. Information is passed between processors in the ASCU via common RAM and an inter processor link. This information is targeting information for communicating to the SSMU. Both processors are able to interface to displays which show the states of system time, discretes and Store (SSMU). The SSMU interfaces to the ASCU via an RS232 interface, and the information passed over this link is targeting and SSMU status (control/monitor). The SSMU communicates with the AVS via the MIL-STD-1553 Armament Bus. To enable this the SSMU has a remote terminal unit which provides dedicated links between 1553 and shared memory and between shared memory and 1553. Also interfaced between the SSMU and the AVS are the following 1760 signals; 1760 Discretes, 1760 LBW, and 1760 HBW, which are used to set the state of the stores. There is also an S & RE interface between the SSMU and the AVS for provision of the necessary signals for jettisoning or firing of stores.

5.2.2 AVS Test System Functions The AVS Test System provides both simulation and monitor functions. The AVS Test System does not provide worst case signal loads or full signal monitoring capability, where these can be provided by simple external loads. Functions of the Test System are detailed below:

a. Simulation Functions

Avionics Bus Control
Avionics Data Source (MIL-STD-1553)
Weapons State Simulation
Weapons Data Source
Suspension Equipment Simulation
Fault Simulation

b. Monitor Functions

AVS State of Health
Avionics Data Values
Weapons Data Values
AVS Error Detection

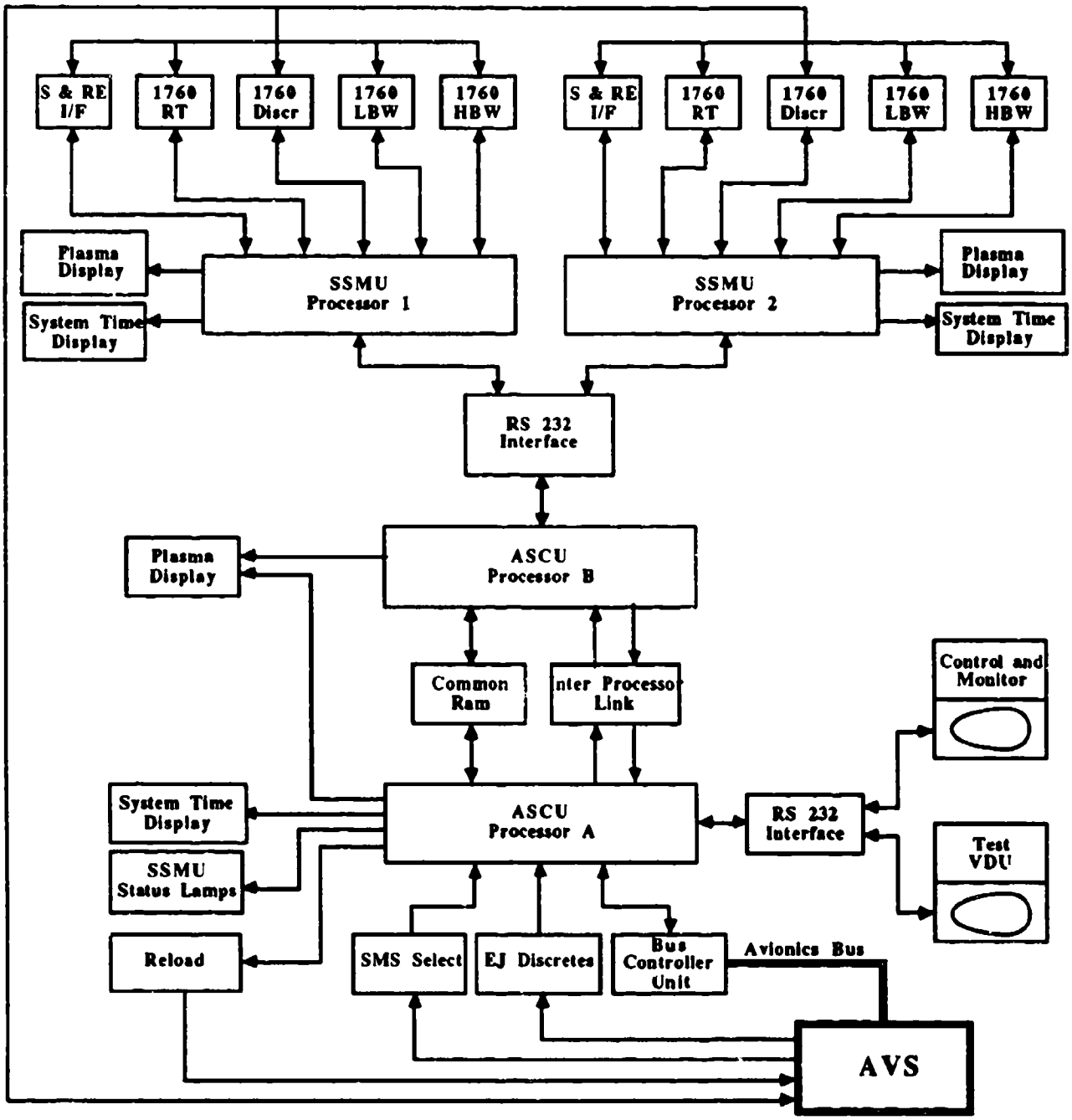

Figure 5.13 AVSTS Block Diagram

5.2.3 AVS Test System Design As shown in figure 5.6, the AVS Test System has two unit types. These are an Avionics Simulator and Control Unit (ASCU) and a Stores Simulator and Monitor Unit (SSMU). Although only one ASCU and one SSMU are deliverable items, up to two SSMU were used in the test and evaluation of the AVS. Functions of the ASCU and SSMU are detailed below:

a. ASCU Functions

Avionics Bus Control
Avionics Data Source and Monitor
AVS Test System Controller and Display (via additional VDU)
Armament Bus Monitor (with additional equipment)
AVS State of Health Monitor

b. SSMU Functions

Weapons Simulation:
- MIL-STD-1760 Air-to-Air Missile
- MIL-STD-1760 Air-to-Ground Missile
- MIL-STD-1760 Bomb
- AMRAAM
- Sidewinder AIM-9L

Weapon Data Source:
- MIL-STD-1553
- Video (STANAG 3350 Class B)
- Low Bandwidth
- Interlock Signals
- AIM-9L Audio
- AIM-9L Guidance Signals

Suspension Equipment Simulation:
- MAU-12
- Modular Rail Launcher
- Store on Station signals
- Rack Unlock and BIT signals

Data Monitor and Display:
- Weapon State
- Target Data
- Errors Detected
- System Time

Signal Monitor and Display:
- Release Signals
- Arming Signals
- Power Supplies
- Interlock Signals

5.3 MIL-STD-1760 Test and Evaluation The overall objective of the AVS was to ensure a valid AEIS standard. To achieve that objective Test and Evaluation processes have been executed using the AVS and the Test System. The key results of the Test and Evaluation process are:

a. MIL-STD-1760 Evaluation Report (to enable the AEIS to be correctly specified).

b. MIL-STD-1760 Test Plan (to enable MIL-STD-1760 implementations to be validated).

The test and evaluation process involves the following tasks to achieve these results:

a. MIL-STD-1760 Test Plan generation
b. MIL-STD-1760 Test Plan execution
c. AVS Evaluation
d. MIL-STD-1760A Evaluation
e. MIL-STD-1760 Logical Design Definition (LDD) Evaluation

These are described in sections 5.3.1 through 5.3.5 below, and are shown in figure 5.14.

5.3.1 MIL-STD-1760 Test Plan Generation This plan identifies each individual requirement of MIL-STD-1760 and describes how to test that each of these requirements are being met. The document identifies four main categories of testing which are:

a. Inspection - Concerned with visual verification (non-operating) of equipment or related documentation.

b. Analysis - Process by which the design is examined and computation based on this is performed.

c. Demonstration - process of verification of a qualitative requirement by observing correct operation.

d. Measurement - Process of verification by exercising applicable elements and collecting, reducing and analyzing data.

The MIL-STD-1760 test plan includes a test matrix which for each of the requirements identifies which category of testing is required and the approach that may be taken to perform those particular tests.

5.3.2 MIL-STD-1760 Test Plan Execution The test requirements identified in 5.3.1 above were used as the basis for ensuring the AVS correctly implements MIL-STD-1760. Firstly those tests relevant to the AVS were identified. Then a detailed procedure was generated for those tests requiring demonstrations or measurements of the AVS. This procedure was then performed to obtain the necessary data to be analyzed. Reports were then generated against each of the relevant requirements and these individual reports collected together and summarized to produce the MIL-STD-1760 Test Report.

5.3.3 AVS Evaluation An evaluation of the AVS design is required to ensure that the MIL-STD-1760 Test and evaluation processes take place in a realistic context; that is, a design representative of an on-aircraft AEIS. This evaluation is achieved by first producing an AVS Evaluation plan which identifies the major evaluation topics to be considered and then for each of these topics identifies the detailed issues to be addressed. The plan also indicated for each issue the approach to be adopted for the evaluation in terms of three main evaluation methods:

a. Analysis - process of examining the AVS design
b. Measurement - process of exercising applicable elements, collecting data and analyzing the results obtained
c. Inspection - process of viewing applicable elements

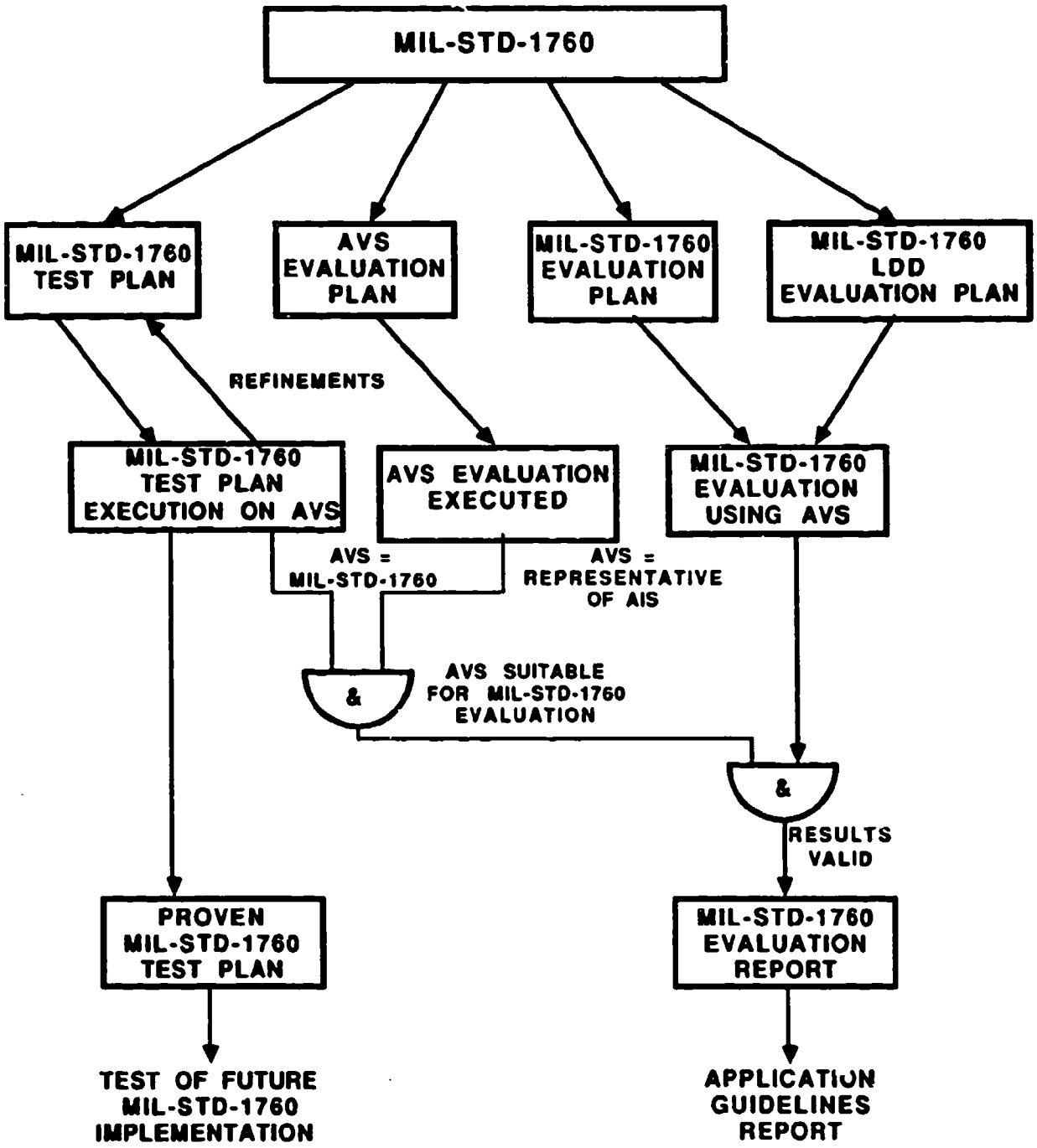

FIGURE 5.14 MIL-STD-1760 Test and Evaluation Process

A detailed procedure was then generated for those evaluation requiring measurements. These procedures were then performed to obtain the necessary data to be analyzed. Reports were then generated against each issue and these individual reports collected together and summarized to produce the AVS Evaluation Report.

5.3.4 MIL-STD-1760A Evaluation This evaluation process is performed in order to determine the impact that the electrical aspects of MIL-STD-1760A has on the design of the AVS. The evaluation was performed by first producing a MIL-STD-1760A Evaluation plan which identifies the major Topics to be considered and, for each Topic identifies the detailed issues to be addressed. The plan indicates the approach to be adopted for the evaluation in terms of the three main methods, Analysis, measurement and inspection as defined in 5.3.3 above. A detailed procedure was then generated for those evaluation issues requiring measurements. These procedures were then performed to obtain the necessary data to be analyzed. Reports were generated against each issue and these individual reports collected together and summarized to produce the MIL-STD-1760A Evaluation report.

5.3.5 MIL-STD-1760 Logical Design Definition (LDD) Evaluation This evaluation process is performed in order to determine the impact that the Logical aspects of MIL-STD-1760 has on the design of the AVS. The evaluation is performed by first producing an LDD evaluation plan which identifies the requirements of the MIL-STD-1760 Logical Design Definition and then defines specific issues associated with these requirements. An LDD Evaluation procedure was then generated which defines the approach to be adopted for evaluating those issues relevant to the AVS. These procedures were then performed and a report generated for each issue. These individual reports were then collected together and summarized to produce the LDD Evaluation report.

5.4 Summary of Results of Test and Evaluation The detailed results of the Test and Evaluation process are embedded in the Application Guidance of this document and in the reports referenced. A summary of the results is given below for the following areas; MIL-STD-1760 Evaluation, MIL-STD-1760 Test Plan, and AVS Evaluation.

5.4.1 MIL-STD-1760 Evaluation The evaluation of MIL-STD-1760 based on the experience of designing and building the AVS has shown that an AEIS can be built for an on-aircraft situation which implements the requirements of MIL-STD-1760. The evaluation did show some areas of concern and these are highlighted in the following paragraphs.

5.4.1.1 Evaluation of Electrical Definition Generally the electrical requirements specified in MIL-STD-1760 can readily be incorporated in the design of a stores management system, the actual interface being simpler than some existing stores. There are two areas in particular which require further consideration: fault isolation requirements on power signals, and provision of RF network for High Bandwidth 1 signals. These are discussed below:

a. Fault Isolation - The particular requirements of MIL-STD-1760 impose the use of circuit breakers in series with each of the power signals at the ASI. No other suitable devices have been found which meet the current-time profile specified in the standard. Circuit breakers are relatively large devices and could present difficulties if available space is limited.

b. RF Network - The requirements of High Bandwidth 1 include the provision of a network to transfer signals up to 1.6 GHz. To ensure that all the requirements of this network are met then the use of specialized RF relays is required. These devices are relatively large and result in the volume of circuitry required to implement this network becoming quite significant. One possible solution would be to make the use of this network optional and so allow the aircraft to only provide this RF capability at selected stations.

5.4.1.2 Evaluation of Logical Design Definition (LDD) Evaluation of the LDD based upon the experiences of the AVS implementation has shown that the predicted benefits in the ares of interoperability, reduction of software and integration cost have become a reality. The AVS SMS

implementation has proved that an aircraft system can be developed with a generic LDD handling software module that can control and release intelligent mission stores using with typical data flow structure in LDD formats and transmitted within the LDD protocols that would be expected in controlling modern missiles. The evaluation result clearly showed that the following areas yielded the expected benefits:

Standard coordinate systems, formats and scalings of entities
Standard Messages for Safety critical control
Specified use of MIL-STD-1553 Status word bits
Store Description Page A
Safety critical states allowing finite state control software

The following aspects require attention to improve the useability of the LDD:

Store Description
Service Request
Standard Control Words
Safety critical Control
Busy

These are discussed in the paragraphs below:

a. Store Description - It was possible to develop generic software modules for message processing using the uploaded descriptions. However, the context of each user defined message; that is, at which point during the release sequence the message is required and the rate that the message is to be transmitted, is not supplied by the mission store in its store description. The lack of this information compromises the interoperability advantages provided by store descriptions, to the extent that store-specific software still has to be developed in the aircraft system.

b. Service Request - The provision of queuing up to 4 events at the mission store and the resultant protocol to support this proved to be cumbersome and over complicated the software design. The Standard vector word created problems within the aircraft software solutions in recovery actions. The reporting of checksum failure through service request over complicated buffering of messages to allow recovery action to be taken.

c. Standard Control Data Words - The use of standard data words for control of mission stores, as demonstrated by the Discrete Control Word 1, can result in increased integration times unless the precise use of the control bits is specified. It also proved difficult to map mission store functions onto available control bits.

d. Safety Critical Control Word - Imposing a strict state change sequence upon mission stores can decrease store run up times and increase store design complexity. A better solution would be to make provision for full sequence to be implemented by the mission store if the store requires it.

e. Busy Times - The benefits in increasing data throughputs by utilizing the uploaded busy times cannot easily be realized. An aircraft implementation capable of handling simultaneous busy RTs with different busy times increases the complexity of the BC firmware to such an extent that the resultant overhead outweighs the possible throughput bonefits.

5.4.2 MIL-STD-1760 Test Plan The execution of the Test Plan on the AVS showed that the system complied with all the requirements for an AEIS as defined in Draft MIL-STD-1760A,

dated April 1985; and Draft MIL-STD-1760A Notice 1, dated 3 June 1985: as limited by CDC document 182-60-22.

5.4.3 AVS Evaluation. The Evaluation process showed, that the system was representative of an on aircraft AEIS implementation in all issues that were considered and were relevant to evaluating MIL-STD-1760. AVS LRU shape, size and weight were not always representative of aircraft equipment, but this did not invalidate the evaluation of MIL-STD-1760.

SECTION 6

MIL-STD-1760 IMPLEMENTATION CASE STUDY

6.1 PURPOSE AND SCOPE OF THE CASE STUDY MIL-STD-1760, the Aircraft/Store Electrical Interconnection System (AEIS), is beginning to significantly affect the aircraft and store development communities as pressure is increased to provide more interoperable stores. The standard requires that new stores be controllable via a subset of the MIL-STD-1760 signal set, and that aircraft be capable of providing the MIL-STD-1760 Signal Set. No aircraft or stores currently fully conform to 1760, although some feature partial implementations. These subsets are varied and are sometimes arbitrarily implemented in the absence of sufficient management direction.

6.1.1 Purpose The purpose of this case study effort is to identify and address issues which will be faced when implementing MIL-STD-1760 in a current U.S. fighter aircraft, this objective being achieved through the practical study of an existing aircraft. The information produced by this study should provide a baseline from which an advanced system design satisfying 1760 requirements can be developed. It will certainly identify typical 1760 implementation issues and how they were resolved in this case.

6.1.2 Scope The scope of the study was limited to the system components currently aboard the aircraft which would be affected by the implementation of MIL-STD-1760. These components generally reside in the aircraft Stores Management System; however, some avionics subsystems are also affected by 1760, and these are also addressed in the study.

6.1.3 Approach The overall approach taken in the study was constrained by the requirement to retain as many of the existing aircraft hardware and software capabilities as reasonably possible, and accommodate both existing and projected stores in the baseline for the advanced design. The approach consisted of four task areas: MIL-STD-1760 familiarization, aircraft data collection, determination of implementation impact on the aircraft through analysis and tradeoffs of alternatives, and the implementation of MIL-STD-1760. The case study has been separated into two parts:

a. those aspects of the aircraft wiring, power and video distribution subsystem, and the Remote Interface Units (RIU) which are impacted by implemented MIL-STD-1760.

b. the design impact on the Advanced Central Interface Unit (ACIU) of implementing all three elements of MIL-STD-1760.

6.2 CASE STUDY AIRCRAFT (F-16C/D) The F-16 C/D was the logical choice for the case study as it is the most modern U.S. fighter aircraft with the potential for being in active service for many years to come. It is a certainty that 1760 stores will eventually be carried by the F-16 and the aircraft will have to be modified accordingly. Further, the F-16 has a modern digital avionics suite which should be capable of supporting 1760 interfaces with minimal change. These features were considered advantageous since it was expected that full 1760 implementation on the aircraft also would eventually be required for a number of reasons. Therefore, the study would provide an independent baseline for future decisions on implementation costs and technical matters. While the study has reviewed current plans to implement 1760 on the F-16, it must be stressed that if any conclusions reached as a result of this study differ from those solutions actually being implemented; it is not a critique of the planned approach by the aircraft prime contractor. This study has not taken into account cost and timescale implementation issues. We would wish to thank the prime contractor for their

support during this study. The following paragraphs address those F-16 C/D systems which were determined to be affected by implementation of a 1760 system. A general description of the F-16 C/D operational characteristics, along with a brief discussion of its current and projected stores management capabilities is presented initially. This is followed by a description of the current and projected stores for the aircraft with illustrations of loadouts and identifications of control requirements. Next, the partial 1760 provisions which are currently featured in this aircraft are discussed. Finally, detailed descriptions of the system components and their functions, which would be effected by full implementation of 1760, are provided.

6.2.1 General The F-16 (C and D models) aircraft are single-engine, multi-role tactical fighters with full air-to-air and air-to-ground combat capabilities. The F-16D has the same characteristics as the F-16C except that it is a tandem two-place aircraft. The aircraft is powered by a turbo fan engine which is in the 25,000-pound thrust class. A tricycle landing gear is used. All flight control surfaces are actuated hydraulically by two independent hydraulic systems that are directed by signals through a fly-by-wire system. The cockpit is enclosed by an electrically positioned clamshell canopy. The key capabilities required for the dual roles of all weather air-to-ground strike and air-to-air superiority include the following: precise fire control, upfront accessible controls, multifunction displays, accurate navigation, efficient data processing and transfer, and most important, a highly capable Stores Management System for aircrew management of both simple and complex stores. This involves the following functions associated with the management of the stores:

identification, inventory and status
activation and control
release, launch and jettison
sequencing and delivery rate
verification of stores and system integrity
video switching
power control
coordinated communications between the cockpit displays, delivery avionics, and suspension and release equipment

In addition, advanced capabilities envisioned for the future imply that accommodations may have to be implemented to improve the ratio between target destruction and the attrition costs of expensive aircraft for items such as:

a. Automatic interrogation by Forward Air Control (FAC) elements and automatic transfer of ordnance status to FAC aircraft

b. In-flight sight depression angle calculations involving calculation of depression angle for weapon release based on new delivery tactics dictated at time of weapon delivery

c. Safe separation/dudding check, including checking of arming/fusing conditions to ensure safe separation and avoid dudding

d. Bias error compensation for ordnance bias errors such as ejection velocity and position on aircraft

e. In-flight fuze settings whereby the fuze setting that will optimize weapon effectiveness is calculated based on release conditions and target kill parameters

f. Aided weapon selection whereby a computer calculates which weapon will be most effective against a particular target and within various release conditions

6.2.2 Current and Projected Stores Figure 6-1 shows the typical store station arrangements for all classes of stores projected for deployment on the F-16 C/D. Figure 6-2 shows the station loading authorizations for the individual stores with aircraft electrical interface requirements which are currently certified for the aircraft, and those projected for certification. The various quantities authorized for each store station and the mixes between stations can be found in the station loading sheets contained in Technical Order 1F-16C-1 for all currently certified stores. The entries for the projected stores are based on analogies with current stores or best qualified judgments.

6.2.2.1 Constraints - The carriage and release limitations of interest which have been published on the currently certified stores are as follows:

a. Mirror images of all authorized store loadings are authorized unless specifically restricted.

b. ECM pods, travel pods, AIM-9 missiles and ACMI pods are non-jettisonable.

c. AN/ALQ-119/15, AN/ALQ-119/17, and AN/ALQ-131 mixes not authorized.

d. Any combination of AIM-9 missile configurations may be mixed.

e. ACMI pod may be substituted for any AIM-9 missile in the authorized air-to-air loadings.

f. Launch sequence of AIM-9 missiles is from inboard to outboard. Only one step-over per wing is authorized.

g. Empty AIM-9 launchers at stations 2 and 8 not authorized for carriage when nuclear weapons are carried.

h. Air-to-surface stores of same type must be separated outboard to inboard.

i. Air-to-surface stores in mixed loads may be separate inboard to outboard; however, all stores of one type must be deployed before initiating deployment of another type.

j. When 300 and 370/600 gallon fuel tanks are carried simultaneously, the 300 gallon tank must be separated prior to separation of 370/600 gallon tanks.

k. Minimum release interval for unretarded stores is 60ms for ripple pairs from TERs.

l. For single stores of the same kind on stations 3, 4, 6 and 7, the minimum release intervals are 200ms for pairs and 100ms for singles.

m. Minimum release intervals for retarded stores is 150ms for pairs and 75ms for singles from TERs.

n. For single mixed stores on stations 3, 4, 6 and 7, the minimum release intervals are 250ms for pairs and 125ms for singles.

o. Selective and emergency jettison for nuclear stores can be accomplished only be using normal SMS release procedures.

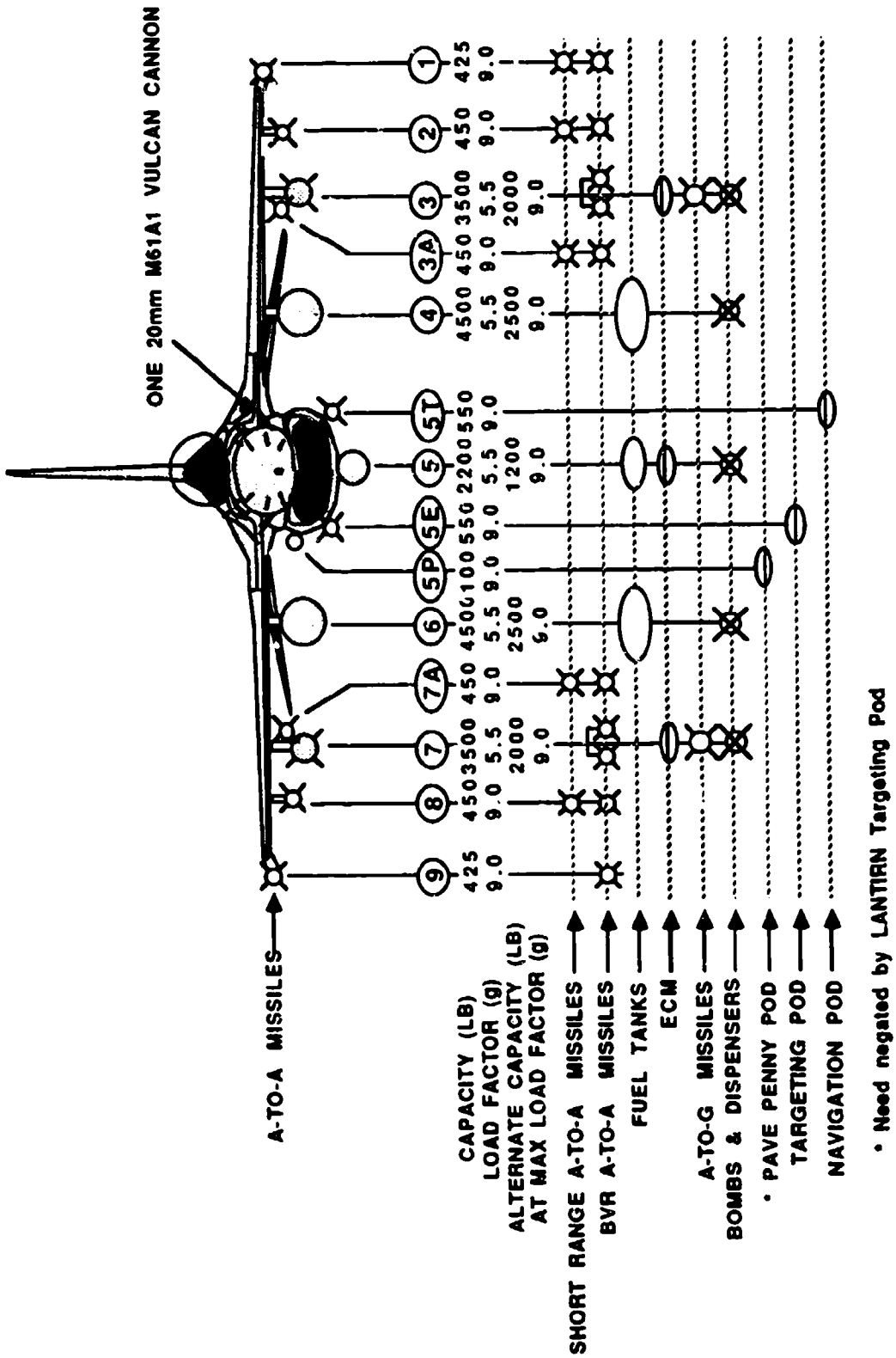

FIGURE 6.1 Typical External Store Station Arrangement and Store Interface Compatibility

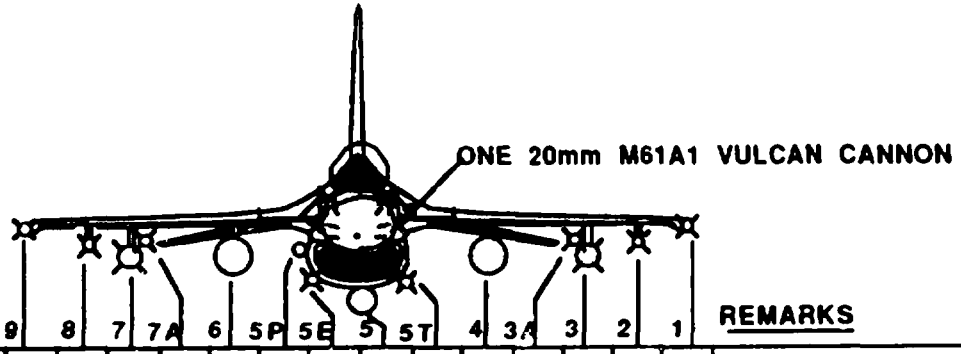

STORE (1)	9	8	7	7A	6	5P	5E	5	5T	4	3A	3	2	1	REMARKS
ACMI	●	●		●							●		●	●	TRAINING POD
AGM-65			●		●					●		●			MAVERICK
AGM-130* +			●		●					●		●			POWERED GBU-15
AIM-7*		●		●							●		●		SPARROW
AIM-9	●	●		●							●		●	●	SIDEWINDER
AN/ALQ-119/15/17			●					●				●			ECM
AN/ALQ-131			●									●			ECM
AN/ALQ-165*			●									●			ECM
AMRAAM* +	●	●		●							●		●	●	ACTIVE RADAR
ASRAAM* +	●	●		●							●		●	●	AIR-TO-AIR
B-57			●		●			●		●		●			NUKE
B-61			●		●			●		●		●			NUKE
BRU-31			●		●					●		●			DUAL EJECT \TER-9
FUEL TANK (300)								●							
FUEL TANK (370/600)					●					●					
GBU-15*			●		●					●		●			EO GLIDE BOMB
IAGTS*			●		●					●		●			TGT. POD, INBD. CABLE POD, OUTBD.
LANTIRN*							●		●						NAV POD, 5T. TGT. POD, 5E.
LAU-3			●									●			2.75 RKT. LCHR. (19)
LAU-68			●									●			2.75 RKT. LCHR. (7)
LAU-88			●									●			3 RAIL MAVERICK LCHR.
LAU-117			●									●			1 RAIL MAVERICK LCHR.
LAU-129*	●	●		●							●		●	●	AIM-9/AMRAAM LCHR.
LAU-5003			●									●			CRV7 RKT. LCHR.
LRSOM* +			●		●					●		●			LONG RNG. STO.-OFF
OBEWS* +			●					●				●			EW TRNG. AID
SRARM +	●	●		●							●		●	●	SHORT RNG. ANTI RADIATION MISSILE

* Projected Stores + Planned MIL-STD-1760 Stores

(1) Loading Authorizations Symmetric except for IAGTS and LANTIRN: see Remarks

FIGURE 6.2 Store Station Authorizations for External Stores with Electrical Int face Requirements

6.2.2.2 Store Control Requirements - The stores listed in figure 6.3 have/will have control requirements which must be accommodated by the F-16 C/D Stores Management System (SMS). These requirements are well understood for stores which are documented in publications such as: Weapon Interface Data Summaries (WIDS); AAAS Contractor Stores Data (ACSD); AAAS Stores Digital Interface Data (ASDID); and, the Aircraft Stores Interface Manual (ASIM). The documents which describe the requirements for a given store are identified in the remarks column for the store listing. The following information is provided for stores listed in figure 6.3 which are not included in the aforementioned information sources (WIDS, ACSD, ASDID, ASIM) and for which little definitive store control information was available.

Store	Remarks	Store	Remarks
ACMI	A-A Combat scoring pod mounts to AIM-9 launcher	IAGTS*	Improved A-A 37u-33 Aerial Target
AGM-65	WIDS-21, 21-A, ASDID-1,4	LANTIRN*	1 Targeting pod, 1 Navigational pod
AGM-130*	Powered GBU-15	LAU-3	FFAR (19) launcher
AIM-7	ASDID-1, 3	LAU-68	FFAR (7) launcher
AIM-9	WIDS-4, ACSD-2, ASDID-1,2	LAU-88	3 rail Maverick launcher WIDS-20
AN/ALQ-119	ECM Pod	LAU-116*	AMRAAM Launcher ASDID-1, 10
AN/ALQ-131	ECM Pod	LAU-117	single rail Maverick launcher WIDS-20, ASDID-4
AN/ALQ-165*	Adv. Self Protection Jammer (ECM Pod)	LAU-5003	CRV7 (19) laucher
AMRAAM*	ASDID-1,10	LRSOM*	next generation stand-off missile
ASHAAM*	Advanced Short Range A-A Missile	MAU-12	pylon internal rack, WIDS-20, ASIM
B-57	NUKE System 1 Interface with NRIU	M61A1	20MM internal gun
B-61	NUKE System 1 Interface with NIRU, ACSD-26	OBEWS*	EW training system
BRU-31	ASIM (same as TER-9), WIDS-20	SRARM*	Short range anti-radiation missile
FUEL TANKS	370 & 600 gals	SAIF*	programmable fuze
GBU-15	2000lb glide bomb (EO) ACSD-22		

* CONCEPT / DEVELOPMENT

FIGURE 6.3 Currently Certified and Projected Stores with Electrical Control Requirements

a. The Air Combat Maneuvering Instrumentation (ACMI) range system contains two airborne pods (AIS/P-4 and AIM-7 TM) which simulate respectively the carriage and launch of AIM-9 and AIM-7 air-to-air missiles. Both pods have unique 1553 A-MUX links with the host aircraft, but interface with the AIM-9 Launcher for other electrical requirements, duplicating those of the AIM-9. However, new acquisitions of these pods beginning in FY-87 are required to comply with MIL-STD-1760.

b. The AGM-130 is a powered version of the GBU-15 Glide Bomb and is currently in the advanced stages of development. Up to three times the range of the GBU-15 is expected by the addition of propulsion. The SMS control requirements, except for the propulsion unit, are expected to be essentially those associated with the GBU-15 and are outlined in ACSD-22. Another possible exception may be a requirement for precise inertial alignment data if a lock-on-after-launch capability requiring navigation to a waypoint is developed for the weapon.

c. The AN/ALQ-119, 131 and 165 are ECM pods which can be carried on stations 3, 5, and 7. They are never mixed; only one of the configurations can be flown during a mission. The AN/ALQ-165 is known as the Advanced Self-Protection Jammer and is currently in the final stages of development. The pods have no direct interface with the SMS except they must be loaded into the SMS memory to provide AC power to the pods.

d. The Advanced Short Range Air-to-Air Missile (ASRAAM) began as a joint USAF/USN venture which was allocated to UK/FRG after a Memorandum of Understanding (MOU) was signed for European participation in the program. ASRAAM is to be a replacement for the AIM-9 family of IR homing missiles. A UK/FRG company called BBG (Bodenseewerk, British Aerospace, GmbH) was formed in November of 1983 to carry out development and production of ASRAAM. Little is known about the status of the program except that a lock-on-after-launch capability, desired by the US, is being debated among the participants.

e. The F-16 external fuel system includes three tanks of different capacities (300, 370 and 600 gallons) which can be carried in various combinations. The 300-gallon tank is carried only at the fuselage centerline station on a MAU-12 and has no electrical interface with the SMS. The 370- and 600-gallon tanks only can be carried on stations 4 and 6 on fuel pylons. The SMS interfaces with the fuel pylon for store present indication and for cartridge fire to jettison the pylon-tank combination.

f. The Improved Aerial Gunnery Target System (IAGTS) is a captive target towed by an aircraft. The target is contained in a pod, reeled in at mission completion. IAGTS control requires: aircraft power; power for jettison, reel out/in, counter reset and data for cable length, scoring, system status, and display thereof. A MIL-STD-1760 interface is a system requirement; however, the system specification does not call for its incorporation until such time as a pre-planned product improvement (P^3I) program is initiated.

g. The LANTIRN targeting and navigation system is in advanced stages of development and will greatly enhance the capabilities of the F-16 upon eventual deployment. The system consists of two pods: one for targeting which includes a laser transmitter/receiver and a FLIR, the other, for navigation, includes a Terrain Following Radar (TFR) and a FLIR. The navigational pod has no interface with SMS. The targeting pod has a serial digital interface with the SMS for control of mode, Field-of-View (FOV) contrast, and AGM-65 Maverick target handoff, both automatic and manual. Postulated advanced versions of LANTIRN would also have the capability to automatically target up to six Mavericks (or other video type weapons) simultaneously. This capability is probably 5 to 10 years in the future.

h. The LAU-3, 68 and 5003 are 2.75-inch rocket launchers carried on the centerline stations of Triple Ejector Racks (TER). An intervalometer within each launcher is ground settable for interval and firing mode (single/ripple). Firing signals from the SMS are routed to the launchers through the TER by a selector switch located on the aft end of the TER. Rocket capabilities for the launchers are: LAU-3 (19); LAU-68 (7); and LAU 5003 (19). CRV7 rockets are loaded in the -5003 as opposed to FFARs for the -3 and -68.

i. The Long Range Standoff Missile (LRSOM) program is just now getting started with concept definition contracts awarded to two teams of contractors headed up by Boeing and General Dynamics (GD). Several European countries are represented on the two teams. At this time the concept appears to be leaning toward the cruise missile approach with a variety of conventional munition warheads. Both lead contractors have developed cruise missiles: Boeing, the AGM-86 ALCM; and GD, the AGM-109 Tomahawk in ground and sea launched configurations. GD also was well into developing an air launched configuration of the Tomahawk called Medium Range Air-to-Surface Missile (MRASM) for conventional weapon warheads before the program was canceled. It is highly probable that LRSOM will be developed with a MIL-STD-1760 interface. Envisioned capabilities of LRSOM imply that the SMS store control requirements will include, as a minimum: power conditioning; inertial alignment; flight support systems checkout and initiation; payload programming; sensor activation; and launch/release.

j. The Internal Gun Subsystem M61A1 consists of cockpit controls, gun controller, 20mm gun, ammunition handling set, gun supports, ventilation system, rounds limiter switch, and last round bypass switch. The gun provides close range air-to-air and air-to-ground combat capabilities. The gun is located at the left strake and is a fixed, air-cooled, six-barrel weapon which is coupled with a 510-round capacity, double-ended, linkless-feed ammunition handling system. Arming of the gun, display of stations (ready/not ready), and display of rounds count are required of the SMS.

k. The On-Board Electronic Warfare Simulator (OBEWS) is an electronic combat (EC) training aid designed to provide aircrews with realistic EC threat indications during training flights. OBEWS will be housed in a pod nearly identical to the AN/ALQ-131 pod and interfaces with the SMS only for power control as do the ECM pods.

l. The Short Range Anti Radiation Missile (SRARM) program was scheduled for a late 1985 start of the concept definition phase. The weapon is to fulfill NATO requirements for protection of aircraft against radiating threats while operating in or around the FLOT (Forward Line of Troops) areas. The threats primarily would be mobile anti-aircraft artillery and surface-to-air missiles launched from vehicles or hand-held. The operational concept implies automatic or autonomous launch upon threat detection allowing the aircrew to fully concentrate on the primary aircraft mission. Such a capability will place significant processing demands on aircraft systems for target acquisition, discrimination, and launch control. It is assumed that the aircraft interface for SRARM will conform to MIL-STD-1760 as is expected for all new NATO weapons. The SMS control requirements could be quite extensive if automatic/autonomous operation becomes an eventual capability.

m. The Standardized Avionics Integrated Fuze (SAIF) is being developed to provide an in-flight capability for programming fuze functions consistent with release conditions and target kill requirements. SAIF features a subset of the MIL-STD-1760 interface and currently consists of: MIL-STD-1553 MUX Bus; 28 VDC power; and discretes for interlock and return, five address lines with return, and address parity. SAIF is intended primarily for use with unitary warhead and dispenser drop weapons with few, if any, sophistications other than the programmable fuze.

6.2.2.3 Impact on Stores Management - Almost all of the projected new complex stores will have a MIL-STD-1760 interface and will generally exhibit control requirements in excess of those associated with existing stores. The stores will require more avionics type information such as targeting, air data, and navigation. Training pods like the ACMI and OBEWS require other types of information not normally found on the SMS bus, such as cockpit switch activations and status of other avionics subsystems. These and other diverse requirements will necessitate a comprehensive SMS/avionics interface. Also, significantly increased SMS processing requirements will occur due primarily to desired capabilities, such as autonomous and simultaneous control of stores and more complex store processing algorithms associated with store targeting and navigational data.

6.2.3 F-16 C/D Current MIL-STD-1760 Provisions A complete aircraft/store electrical interconnection system is comprised of three elements: electrical, logical, and physical. The electrical element specifies the aircraft-to-store interface signal set and associated electrical characteristics. The logical element defines aspects such as the communication protocol, formats for messages and standard data words. The physical element specifies the mechanical parameters necessary for achieving intermateable electrical connections. Of these three elements, the electrical and physical elements are addressed in MIL-STD-1760A. The electrical interface is comprised of two signal sets, a Primary Interface Signal Set and an Auxiliary Power Signal Set. The former is the basic signal set for 1760, while the latter is for those applications requiring additional power. The logical element was initially released as draft notice 1 to MIL-STD-1760A. This notice has been used as the reference document for all of the logical requirements. Figure 6.4 lists the 1760 electrical requirements and shows the wiring provisions made/to be made by the airframe manufacturer for the requirements in both the F-16 Blocks 15 and 25. The following general comments are provided on the actual provisions as documented in the information and data reviewed for C/D model aircraft.

a. RF Lines - General Dynamics claims to have installed RF lines such that two lines are available near the wing disconnect to store stations 3, 4, 6 and 7. These lines terminate in the avionics bay. This claim could not be verified.

b. Video Lines - A video line is available at the store interface of stations 3, 4, 6, and 7 (Maverick certified stations). For the air-to-air stations (1, 2, 3A, 7A, 8 and 9), video is available at the wing/launcher (adapter) interface. Given that 3 and 3A are mutually exclusive (same for 7 and 7A), the video lines at the "A" stations could be utilized as a second line to stations 3 and 7. The video line for station 5 now terminates in the aircraft near that store station.

c. 3 Phase AC - Primary 3 Phase 115 VAC power is available at the store interfaces of stations 3, 4, 6, and 7. Three phase power is available for station 5 at the ECM connector (see following comment on auxiliary power). For the air-to-air stations, one phase is available at the interface to the launcher power supply. The other two phases are present near the wing/launcher (adapter) interface.

d. 28 VDC Power 10 A/Line - At stations 4 and 6, 28 VDC is present at the store interface with a maximum current capability of 14.4 amps. At stations 3, 7, and the air-to-air stations, 28 VDC with maximum capability of 10.8 amps is available.

e. Independent Power Control - Power is presently switched by discretes from the Advanced Central Interface Unit (ACIU) on a station-by-station basis. AC and DC power are controlled together.

MIL-STD-1760A REQUIREMENTS		F-16A/B OCU AIRCRAFT PROVISIONS STORE STATION											F-16C/D AIRCRAFT PROVISIONS STORE STATION											REMARKS
FUNCTION	QTY	1	2	3A	3	4	5	6	7	7A	8	9	1	2	3A	3	4	5	6	7	7A	8	9	
RF LINES	2															2	2		2	2				
VIDEO LINES	2		1	1	1	1		1	1	1	1		1	1	1	2	1		1	2	1	1	1	NOTE 2
3 PHASE AIRCRAFT POWER	1	1	1	1	1	1	1	1	1	1	1	1	1	1	1	1	1	1	1	1	1	1	1	NOTE 3 & 4
28 VDC POWER 10A/LINE	2	1	1	1	1	1	1	1	1	1	1	1	1	1	1	1	1	1	1	1	1	1	1	NOTE 5
INDEPENDENT POWER CONTROL	3	P	P	P	P	P	P	P	P	P	P	P	3	3	3	3	3	3	3	3	3	3	3	NOTE 6
AUDIO (TSP)	1	1	1	1	1		1		1	1	1	1	1	1	1	1	1	1	1	1	1	1	1	
MULTIPLEX 1553B	2	2	2	2	2	2	2	2	2	2	2	2	2	2	2	2	2	2	2	2	2	2	2	
INTERLOCK	1	1	1	1	1	1	1	1	1	1	1	1	1	1	1	1	1	1	1	1	1	1	1	
STRUCTURE GROUND	1	1	1	1	1	1	1	1	1	1	1	1	1	1	1	1	1	1	1	1	1	1	1	
RELEASE CONSENT	1	1	1	1	1	1	1	1	1	1	1	1	1	1	1	1	1	1	1	1	1	1	1	
270 VDC POWER	1																							
AUXILIARY 28 VDC POWER	1																							
AUXILIARY 3 Ø AIRCRAFT POWER	1				1		1		1							1		1		1				
AUXILIARY 270 VDC POWER	1																							
AUXILIARY INTERLOCK	1				1		1		1							1		1		1				
AUXILIARY STRUCTURE GROUND	1				1		1		1							1		1		1				
FIBER OPTICS BUS	2																							

NOTES:

1. (P) INDICATES WIRING ADDED TO PROVISIONING CONNECTOR NEAR STATION
2. VIDEO LINE IMPEDANCE IS 95 OHMS. PROVISIONS ARE FOR 1 LINE ONLY
3. SECOND LINE PROVIDED BY LAUNCHER / PYLON
4. TOTAL POWER AVAILABLE WILL BE 14.4 AMPS
5. INDEPENDENT POWER CONTROL WILL BE PROVIDED BY LAUNCHER / PYLON
6. AIRCRAFT WIRING USES SHIELDED WIRE. LAUNCHER / PYLON WILL MATCH SHIELDED WIRE WITH TWISTED SHIELDED PAIR OF MIL-STD-1760A

FIGURE 6.4 Current F-16 MIL-STD-1760A Configuration

f. Audio - Audio lines are available at the store interface of the air-to-air stations. These lines are used to feed the AIM-9 audio into the aircraft.

g. Multiplex 1553B - The 1553 Avionics Multiplex (A-MUX) Bus is available at the store interface of stations 3, 4, 6, 7 and at the fuselage pylons disconnect of station 5. MIL-STD-1553 Weapons Mux (W-MUX) capability is available at the pylon disconnect for the air-to-ground stations and at the wing launcher (adapter) interface for the air-to-air stations. The ACIU has already been modified to support 1553 W-MUX protocol.

h. Interlock - Existing capabilities can be utilized to implement the interlock line.

i. Structure Ground - Structure ground is available at the store interface at all stations except 5. For station 5, it is available at the fuselage pylon disconnect.

j. Release Consent - Safety considerations notwithstanding, a discrete from the Remote Interface Unit (RIU) could be utilized for Release Consent.

k. Auxiliary 3 Phase AC Power - Three phase AC power presently utilized for control of ECM pods is available at the ECM/Store interfaces for station 5, and at the ECM connector for stations 3 and 7. Note that the power is not switched by the Stores Management System.

l. Auxiliary Interlock - Generally available.

m. Auxiliary Structure Ground - Available.

6.2.4 System Components affected by MIL-STD-1760 Initial studies of the implementation requirements of 1760 showed that the affected F-16 C/D components are primarily in the Stores Management System with a few other components in the Video Switch and Stores Standby Power systems. The following paragraphs provide general information on functions of these three systems along with more detailed descriptions on the components within the systems.

6.2.4.1 Stores Management System (SMS) - The F-16 C/D Advanced Stores Management System shown as a block diagram in figure 6.5 performs the following functions:

Store identification, inventory, and status
Store activation and control
Store release, launch, and jettison
Stores sequencing and delivery rate
Verification of store and system integrity
Video switching and power control at the weapons stations

The SMS provides communication linkages between the pilot's displays, the weapon delivery avionics, and the store station equipment. One-man delivery is facilitated by the multifunction display panel which provides a display of store status and weapon delivery mode. This allows the pilot to reprogram delivery options in flight through simple keyboard operations. The SMS functions are initiated by pilot operated switches on the SMS Multifunction Display (MFD) or the Integrated Control Panel (ICP) master mode panel, implemented by the Advanced Central Interface Unit (ACIU) and accomplished by the Remote Interface Units (RIU).

The components of the SMS are listed below. Although not defined as part of the SMS, the Launcher Electronics are integral to stores management and are included with the SMS component descriptions for convenience. The functions and characteristics of these components are described in the following paragraphs.

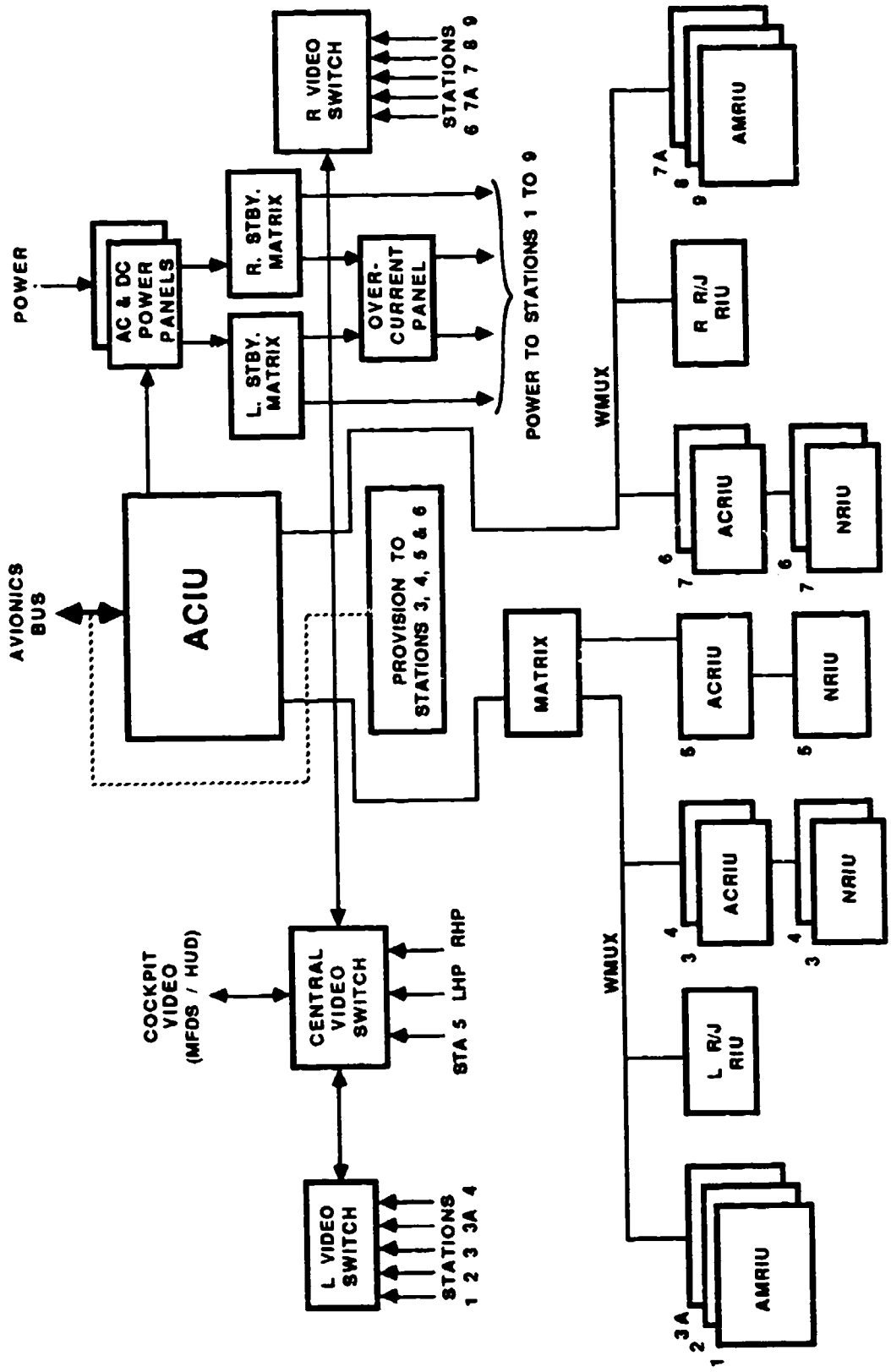

FIGURE 6.5 F-16 C/D stores management system block diagram

Advanced Central Interface Unit (ACIU)
Advanced Conventional Remote Interface Unit (ACRIU)
Advanced Missile RIU (AMRIU)
Nuclear RIU (NRIU)
Jettison/Release RIU (J/R RIU)
Weapons Multiplex Bus (W-MUX)
MIL-STD-1553 Bus
SMS Software
Launcher Electronics

6.2.4.1.1 Advanced Central Interface Unit (ACIU) - The ACIU performs the following functions:
Monitors switch actions from the cockpit
Monitors the condition of the stores
Creates commands files in response to proper inputs
Outputs created command files via discretes, W-MUX Bus, Avionics MUX Bus (A-MUX), and Display Mux Bus (D-MUX)
Maintains store inventory
Performs system tests

The ACIU is informed of switch actions in the cockpit via discretes and digital data over the D-MUX bus. Status information on the stores is received over the W-MUX from Remote Interface Units. These inputs, when valid, result in command files being built. Such outputs take on of the following two forms; discretes output from the ACIU discrete I/O board, or messages sent out over the A-MUX, D-MUX, or W-MUX. Commands intended to condition or release stores go out over the W-MUX Bus. Commands intended to update displays or data at other avionics systems are transmitted over the A-MUX or D-MUX busses. If these commands result in successful store deployment, the ACIU then updates the stores inventory. The firmware which controls the ACIU is the SMS Operational Flight Program (SMS OFP). Located in nonvolatile memory, the SMS OFP implements the functions identified above. For a brief description of this program see paragraph 6.2.4.1.8. ACIU hardware consists of redundant, symmetric processors which provide general processing capabilities and interface with other elements of the SMS and the avionics system, enabling control of the SMS. The ACIU directs the Remote Interface Units (RIU) to transmit store control signals, and in turn receives currently updated store status from the station(s) RIUs. These administrative functions are performed by a stores data processor through the weapons multiplex interface element. The processor contains memory for the program and data storage and input/output channels for signal transfer. Each of the ACIU microcomputer systems consists of a stores data processor, a DMA RAM, a nonvolatile memory, MUX Bus interface elements, and a fault monitor. The stores data processor consists of a microprocessor CPU and the necessary processing control logic. The program memory consists of 48K bytes of non-volatile programmable memory. It is in this memory that the executable instructions of the SMS OFP reside. The DMA RAM is 16K bytes of shared volatile random access memory (RAM), and a DMA control capability. This memory is used for data storage and to buffer input/output to the A-MUX. A fault monitor detects failures in each of the processors and reports these failures to the other, so that if necessary, the good unit can take over all processing tasks. It monitors the processor logic for things such as addressing errors, timing errors, clock errors, parity errors, and power supply failures. The fault monitor also contains a loop error detection capability to provide CPU or software error detection capabilities. The ACIU is positioned in the forward equipment bay on the left side of the aircraft just forward of the cockpit. About 5000 in^3 are available in the bay, occupied by radar, communications, and other miscellaneous components in addition to the ACIU. Some volume (approximately 1000 in^3) around the ACIU appears available for limited expansion of the ACIU without having to relocate other equipment (This conclusion has been reached after a physical inspection of the equipment bay).

6.2.4.1.2 Advanced Conventional Remote Interface Unit (ACRIU) - The ACRIU provides signals to the store, reports status from the store, sends control signals to the Video Switch and MAU-12, and reports status from the MAU-12. Linked to the ACIU by the W-MUX Bus, the ACRIU outputs ACIU commanded signals. These signals fall into two classes; discrete and analog. The discrete signals are produced by switch action. Two D/A converters provide the analog signals. In older versions (F-16A/B CRIU) all of these signals serviced only the store and MAU-12, but as the ACIU discrete I/O board became saturated, some of the ACIU controlled discretes were moved to the ACRIU. These discretes include the control signals to the Video Switch, Sel Video A and Sel Video B. The ACIU sends commands to the ACRIU in the form of messages over the W-MUX Bus. The ACRIU responds with a status word on the clock of the second GO/NO GO word. Using this status word, the ACRIU reports the condition of the received command, the results of that command, and the status of the store and MAU-12 (pylon ejector rack). One ACRIU is located at each air-to-ground weapons station within the weapons pylons at stations 3, 4, 6 and 7 and within the centerline pylon for station 5. Additional space in the weapons pylons near the current CRIU locations is limited; however, some other weapons pylon areas offer available space should expansion of the ACRIU be necessary. This would, however, require allocating ACRIU functions to multiple small packages. These areas are associated with the forward and aft pylon fairings, the J907 and J917 receptable location, and the safety pin storage compartment which offers the greatest volume, approaching some 430 in^3. The centerline pylon is considerably smaller than a weapons pylon although some space could be made available in the forward and aft fairing areas and immediately aft of the ACRIU mounting structure. The weapons pylons are interchangeable between stations 3, 4, 6 and 7 and contain both the ACRIU and the Nuclear Remote Interface Unit (NRIU). The ACRIU must be removed from the centerline pylon before an NRIU can be installed.

6.2.4.1.3 Advanced Missile Remote Interface Unit (AMRIU) - The AMRIU outputs control signals to missiles, controls the conditioning signals from the launcher power supply, switches analog feedback signals from the missiles, and reports missile status and the accomplishment of requested actions. Linked to the ACIU by the W-MUX Bus, the AMRIU outputs control signals and closes relays in response to ACIU commands sent in the form of data words. Using protocols defined in paragraph 6.3.1.1.6, the AMRIU also returns status words to the ACIU. In these status words, the AMRIU reports the condition of the store and of received commands. The AMRIU is located at stations 1, 2, 3A, 7A, 8 and 9 when these stations are configured for air-to-air weapons. The AMRIU is located in the extreme aft end of each missile launcher. The launchers at stations 1 and 9 are bolted directly to the tips of the wings. Launchers at stations 2, 3A, 7A and 8 are attached to launcher adapters. Unused space in the launcher is limited to a couple of inches aft of the AMRIU; however, the launcher adapter offers some possibilities for additional hardware as the cutouts and fairings are empty except for an umbilical which passes through the forward fairing.

6.2.4.1.4 Nuclear Remote Interface Unit - Nuclear RIUs can be installed at stations 3, 4, 5, 6 and 7, but are not necessarily carried during non-nuclear or training missions. Specifics on the operation of these units, however, is beyond the classification of this document. The NRIU is located in the aft portion of the weapons pylon, and interchanges with the ACRIU in the centreline pylon.

6.2.4.1.5 Jettison/Release Remote Interface Unit - Two J/R RIUs provide redundant stores separation capability at stations 3, 4, 5, 6 and 7. Physically located on separate wings, the left and right J/R RIUs are identical in both function and structure. Each RIU interfaces with Weapons Multiplex Bus, the Master Arm and Release Matrix Assembly, and store stations 3 through 7. The J/R RIUs function as digital switches. At the receipt of the proper release code, the J/R RIU will close the addressed station relay(s) and enable the J/R Master Arm & Release Power to energize (ie, enable Fire Cartridge Command discrete) the cartridge relay(s) in the

pylon(s). This enables the firing of both cartridges in each MAU-12 pylon bomb rack. The energy released from firing either of these cartridges is sufficient to jettison all stores on the MAU-12. In addition, the firing of one cartridge will cause the sympathetic firing of the other. Therefore, only one J/R RIU needs to be functional to perform the release function. The switching logic which implements these functions is similar to that of the ACRIU. One J/R RIU is located in the wing area immediately behind the leading edge in the midsection of each wing. Access to a J/R RIU requires the removal of a wing surface panel on the leading edge which is a tedious process. The aircraft manufacturer considers the J/R RIUs to be "permanently" installed.

6.2.4.1.6 Weapons Multiplex Bus - The W-MUX Bus (or Stores Management Mux Bus) provides the serial digital data link between the ACIU and the RIUs and the ACIU and the stores. A functional diagram of this data link is presented in Figure 6.6. The ACIU acts as Bus Controller and is capable of driving the four wire (eight wire for dual redundant) using MIL-STD-1553, 1553B or RIU MUX (dual simplex) protocols. Eight wires (four twisted shielded wire pairs) are provided by the ACIU to communicate to the RIUs. These eight wires are connected to thirteen RIUs via seven station matrices. Along with the eight transmission lines originating in the matrices (for redundant dual-simplex operation), four additional wires are routed to the AMRIUs and the ACRIUs in the form of two twisted shielded wire pairs. Currently these wires are terminated in the following disconnects: wing pylon disconnect (J812) at stations 3, 4, 6 and 7; wing launcher disconnect (J810) at stations 1 and 9; wing adapter disconnect (J811) at stations 1, 3A, 7A and 8; and aircraft pylons disconnect (J237) at station 5. These wire pairs provide for redundant 1553/1553B operation.

6.2.4.1.7 MIL-STD-1553 Capability - Bus Controllers in the ACIU support three data transmission protocols; 1553, 1553B and W-MUX. There are, however, no 1553 remote terminals currently in the RIUs The connection which links the 1553 compatible store to the Weapons MUX Bus consists of two twisted shielded wire pairs (to provide dual redundancy). These four links are coupled to four lines of primary dual-simplex bus. This coupling is accomplished at the station matrices. For stations without a 1553 store, these coupled lines terminate at the wing connector. Additional MIL-STD-1553 capability is provided to store station 3, 4, 6 and 7 by bringing the A-MUX transmission lines to the aircraft-store interface.

6.2.4.1.8 SMS Software - The SMS Operational Flight Program (OFP) is a real-time computer program which controls the selection, monitoring, conditioning, and release of stores on the F-16 C/D. The SMS OFP also maintains store inventory and performs certain ancillary functions, most of which are designed to provide backup system control in the event of a Fire Control Computer (FCC) failure. Designed to operate in a dual processor environment, two structually identical copies of the SMS OFP are provided to the ACIU. With one copy located within the primary processor and other within the backup processor, information is shared between the two programs via dual-ported RAM. In the event of a primary processor failure, the backup processor will assume control of the SMS using the second copy of the SMS OFP and the data in RAM. Execution of the SMS OFP is accomplished such that tasks which require definite processing rates are run as groups at periodic rates. Tasks which do not require a defined processing rate are run in the remaining time available between rate groups. The SMS OFP is composed of the 14 components described below. These components can be grouped into the following three categories: operating system components, applications components, and support components. The operating system components interface the application tasks within the hardware. Applications components perform the operational functions of the OFP. The support components handle the ancillary tasks which are mostly transparent to the functional operation of the OFP, but which are necessary in order for those functions to be implemented. An example of such a task would be maintenance of queues. Figure 6.7 illustrates the organization of these 14 components into these three categories.

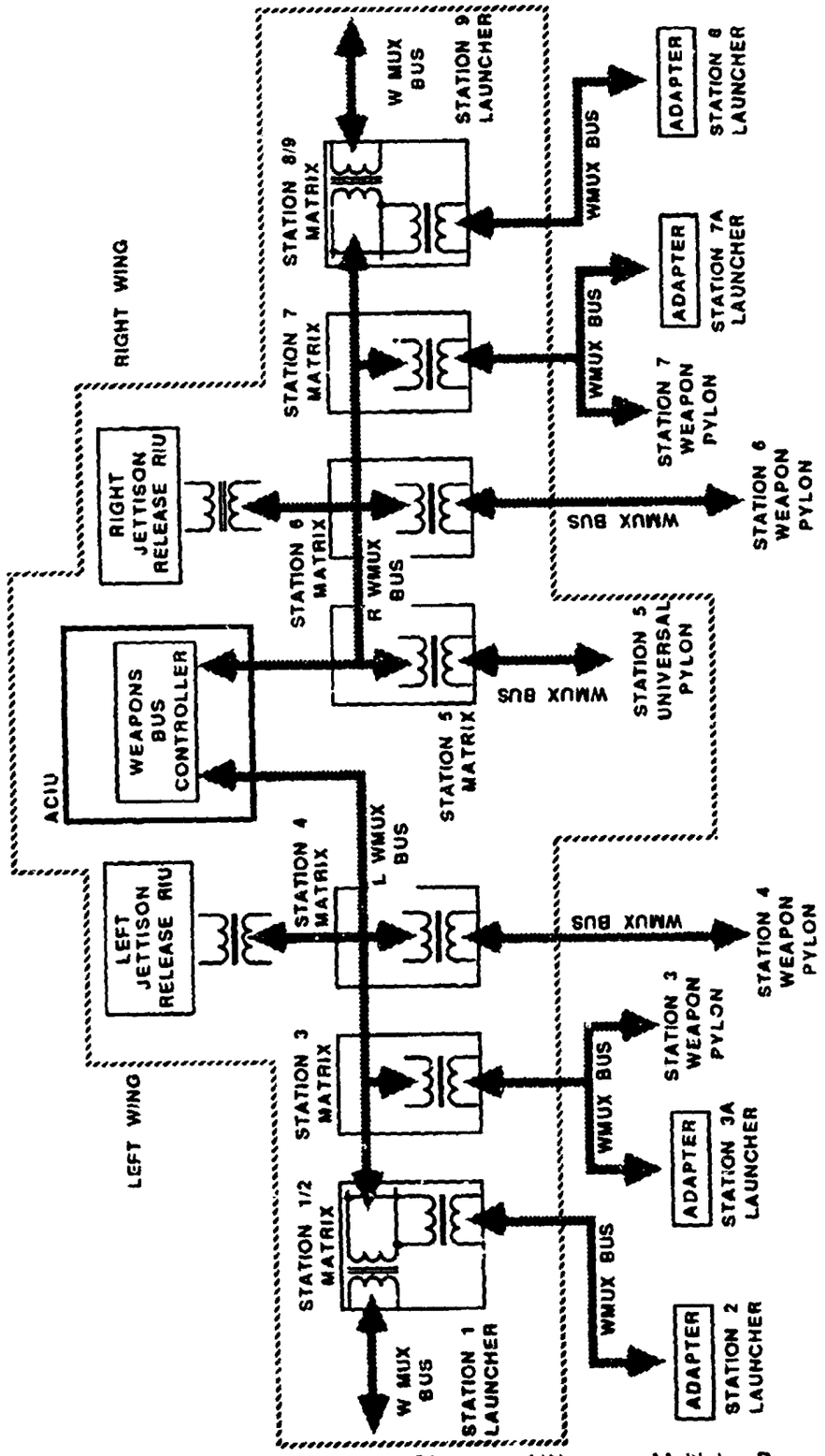

FIGURE 6.6 Functional Diagram of Weapons Multiplex Bus

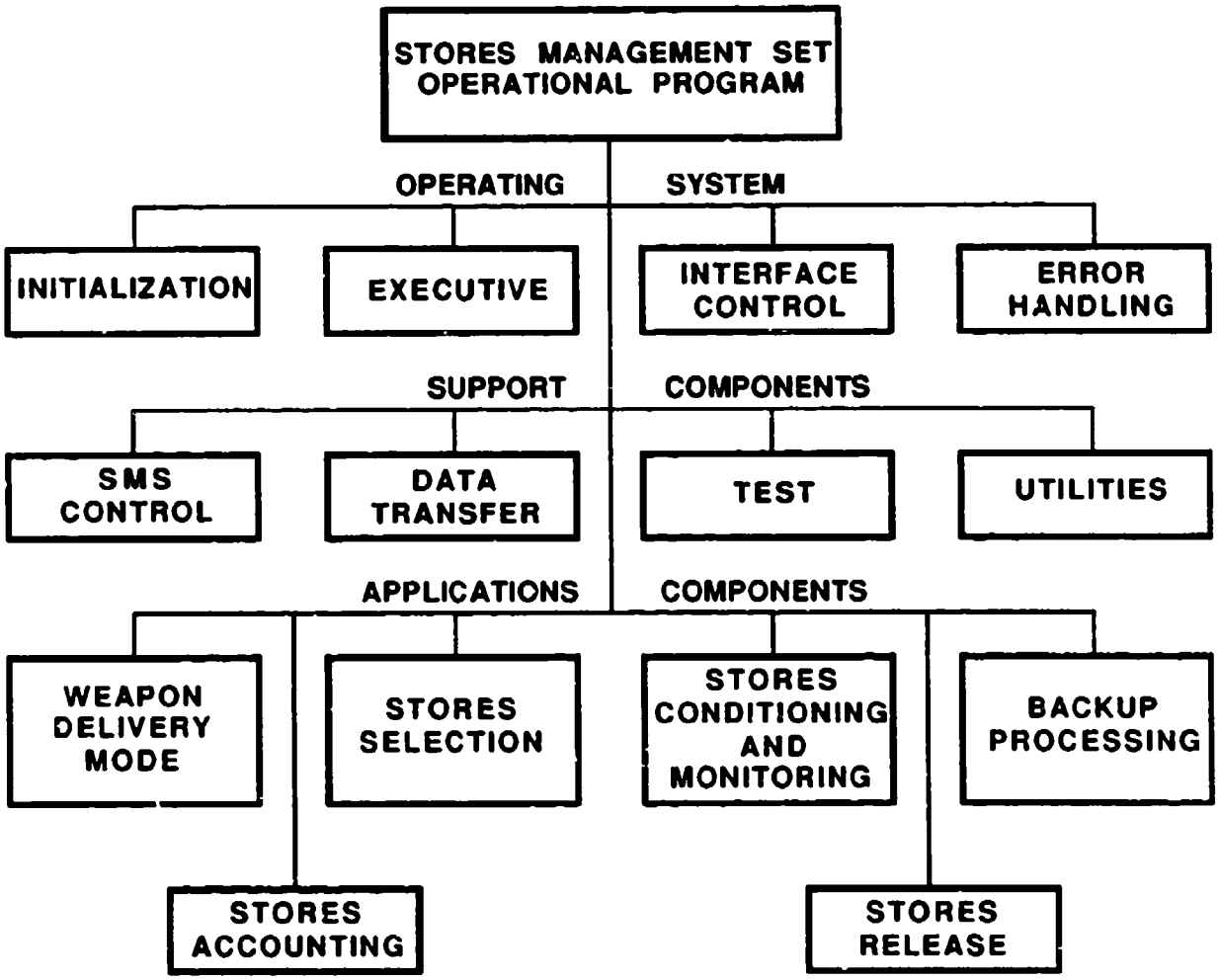

FIGURE 6.7 SMS OFP Structure

a. Operating System Components

(1) Executive Component - The Executive component schedules the execution of application tasks and services interrupts and other computer-hardware related functions. This component provides the primary interface between the application components, the input/output, timing clocks, and error checking provisions of the computer hardware. It also coordinates the operation of the Backup Processing component. The Executive maintains control unless a system error condition is detected which prevents continuation of system operation. If such an error condition occurs, control is returned to the Error Handling component.

(2) The Initialization Component - After a power-on interrupt occurs, the proper initialization (and testing, if not in the emergency jettison mode) of both system hardware and software is performed by the Initialization Component. Proper operation of both processors is assured with a full range of ACIU tests. The ACIU master processor is initially selected during initialization, the synchronization of the A and B processor operation is achieved using the intercomputer interrupt in a command/response arrangement, and both system executives are initiated by the Initialization Component.

(3) Error Handling Component - The Error Handling component detects failure indication from the power-down interrupt, the machine error interrupt, and Test component, the Executive component, and the Initialization component. Upon detection, Error Handling performs fault filtering, isolation, reporting, recording and recovery as required by the particular fault.

(4) Interface Control Component - The Interface Control component supervises the input-output via the serial digital multiplex buses, the discrete signals, and the analog signals.

b. Support Components

(1) Utilities Component - This component provides common utility and testing routines for shared use by the other components.

(2) Test Component - The test component conducts self-test and built-in-test on the SMS system. Self-test involves continuous, non-interruptive testing conducted during normal system operations. Built-in test is operator initiated and is performed interruptively or during normal system operation. Self-test is conducted on the non-volatile memory, the Remote Interface Unit (RIU) communications, the weapons bus controller, and the discrete input/output boards. Built-in tests are conducted on RIUs and input discretes. Other CIU elements are checked with hardware self-test features.

(3) Data Transfer Component - The Data Transfer component provides double buffering input/output service for all multiplex data flow between avionics subsystems and the Stores Management Set Operational Flight Program. Additional tasks performed by this component include formatting discretes and building the weapons multiplex bus controller's command table.

(4) System Control Component - The System Control component uses the SMS mode, switch positions, and other indications to determine the tasks to be executed. This component then invokes appropriate subroutine linkages to implement the selected mode.

c. Applications Components

(1) Stores Accounting Component - The Stores Accounting component accepts and records store quantities, types and locations. This component updates the current stores based on inputs from the Stores Release component or operator intervention. This component also provides the appropriate indication of the discrepancies between the operator entries and the allowed stores configuration.

(2) Stores Selection Component - The Stores Selection component provides the selection for display and release of stores and stations in the emergency jettison, selective jettison, dogfight, missile override, air-to-air air-to-ground, and gun modes.

(3) Stores Conditioning and Monitoring Component - The Stores Conditioning and Monitoring component provides the conditioning and monitoring of conventional weapons, special weapons, and RIUs. This component also provides the states of the weapons for display.

(4) Stores Release Component - The Stores Release component performs actions required to emergency jettison stores on stations 3 through 7, selectively jettison all appropriately selected stores, execute manual and automatic weapon releases, and maintain the gun status.

(5) Weapon Delivery Mode Component - The Weapon Delivery Mode component determines the current system master mode and Stores Management Set subsystem mode. This component determines the Fire Control Radar mode, the currently selected gun arming option and weapon delivery profile.

(6) The Backup Processing Component - The Backup Processing component assumes responsibility for tasks normally performed by the FCC when the FCC is incapable of performing them. Only tasks which provide essential self-defense and return-to-base capabilities are performed by the SMS. These tasks include monitoring the display management switch to determine display selection, calculating reference altitude settings, providing source control of the slew excitation, maintaining track assignments for target selections, and determining status of the subsystems pointer to command the FCR to enable the acquisition cursor.

6.2.4.1.9 Launcher Electronics - This paragraph describes the functional characteristics of the units which compose the launcher electronics. These units include the Launcher Power Supply, Aerial Combat Maneuvering Instrumentation (ACMI) Pod Relay, and safety switch.

a. Launcher Power Supply - The Launcher Power Supply provides the missile with power and conditioning signals. By rectifying aircraft supplied 115 VAC, the Launcher Power Supply provides both 25.2 VDC and 175 VDC to the missile. As for the control signals, they are sourced by commands from the AMRIU. Unlike other store interface units, the Launcher Power Supply has no direct data link to the ACIU. Other functions performed by the Launcher Power Supply include the amplification of the missile audio signal.

b. AMCI Pod Relay - The ACMI Pod Relay, located in the missile launcher, controls the audio signal to the intercom system. Sourced by a discrete from the ACMI Pod, the relay connects either the missile audio or the ACMI Pod Audio to the intercom system.

c. Safety Switch - A Safety Switch outputs GAS GRAIN SQUIB to the missile and FIRE to the AFT Strike Point in the event that these signals are activated and the switch is enabled.

6.2.4.2 Stores Standby Power System - The Stores Standby Power System, (Figure 6.8) provides a 115 VAC and 28 VDC power to all nine store stations. Power is provided to the Stores Standby Power System via the aircraft power buses. Control is accomplished using ACIU controlled relays located in the Stores Standby Power Matrices (left half, LH, and right half, RH), and the Nacelle Equipment Bay Power Panel. Additional relays, located in the Overcurrent Protection Panel, provide overcurrent protection for the three phase 115 VAC at stations 3, 5 and 7. The components of the Stores Standby Power System are listed below.

Right Strake DC Power Panel
Right Strake AC Power Panel
Stores Standby Power Matrix-RH
Stores Standby Power Matrix-LH
Nacelle Equipment Bay AC/DC Power Panel
Overcurrent Protection Panel No. 1

6.2.4.2.1 Operation - Activation of the Control Ground discrete and any station (1-9) by the ACIU will energize the DC power relay in the Power Matrix, providing 28 VDC at the store station. For stations 6, 7, 7A, and 9, these DC power relays are located in the right half (RH) of the Stores Standby Power Matrix. The DC power relays for the rest of the stations (stations 1, 2, 3, 3A, 4 and 5) are located in the left half (LH) of the Power Matrix. Control of the station

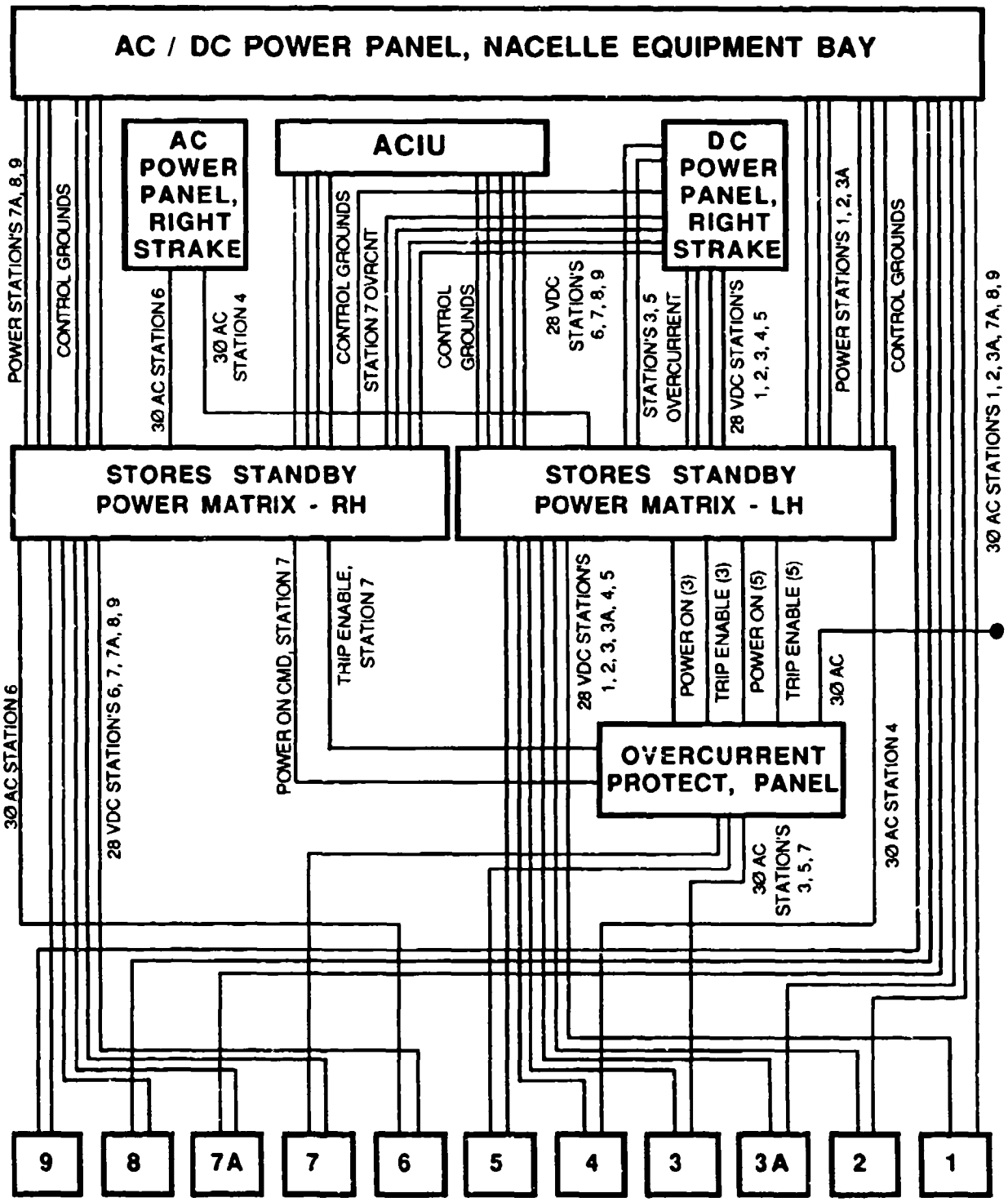

FIGURE 6.8 Stores Standby Power System

AC power is accomplished in the same manner as the DC power with the exceptions of stations 3, 5 and 7. Like DC, the AC power at stations 1, 2, 3A, 4, 6, 7A, 8 and 9 is directly controlled by an ACIU enabled ground. For stations 1, 2, 3A, 7A, 8 and 9, these ACIU controlled relays are located in the Nacelle Equipment Bay Power Panel. The Stores Standby Power Matrix-RH contains the ACIU controlled relays for the AC signals at station 6, and to the Stores Standby Power Matrix-LH containing the station 7 ACIU controlled AC relays. However, the AC power at stations 3, 5 and 7 are not directly activated by a control ground from the ACIU. Instead, they are activated by a discrete which results from the ACIU control ground closing the station DC power relay on the overcurrent signal in the Stores Standby Power Matrix. The resulting signal, POWER ON CMD, is sent to Overcurrent Protection Panel No. 1, enabling AC power to the Store Station.

6.2.4.2.2 Functional Description - All components of the Stores Standby Power System are considered part of the Avionics Systems Affected (ASA) by the implementation of MIL-STD-1760. The functional characteristics of these components are given in following paragraphs.

a. Right Strake DC Power Panel - The Right Strake DC Power Panel provides the DC power for all nine store stations (including stations 3A and 7A). Power is taken off two 28 VDC buses (ESS & BATT) at the Right Strake DC Power Panel and routed to the Stores Standby Power Matrices (LH and RH). At the Stores Standby Power Matrices the power is switched, by ACIU controlled relays, between open and the store stations.

b. Right Strake AC Power Panel - The Right Strake AC Power Panel provides three phase 115 VAC power for stations 4 and 6. Power is taken off the 115 VAC Main Bus at the Right Strake AC Power Panel and routed to the Stores Standby Power Matrices (LH and RH). At the Stores Standby Power Matrices the power is switched, by ACIU controlled relays, between open and the store stations.

c. Stores Standby Power Matrix-RH - The Stores Standby Power Matrix-RH is responsible for switching the 28 VDC power at stations 6, 7, 8 and 9, providing and switching the three phase 115 VAC power at station 6, and providing the station 7 power control signals (TRIP ENABLE and POWER ON COMMAND) to Overcurrent Protection Panel No. 1. All switching in the Stores Standby Power Matrix-RH is controlled by the ACIU via control ground discretes (STANDBY ARM).

d. Stores Standby Power Matrix-LH - The Stores Standby Power Matrix-LH is responsible for switching the 28 VDC power to stations 1, 2, 3, 3A, 4 and 5, providing and switching the three phase 115 VAC power at station 4, and providing the station 3 power control signals (TRIP ENABLE and POWER ON COMMAND) to Overcurrent Protection Panel No. 1. All switching in the Stores Standby Power Matrix-LH is controlled by the ACIU via control ground discretes (STANDBY ARM).

e. Nacelle Equipment AC/DC Power Panel - The Nacelle Equipment AC/DC Power Panel is responsible for providing and switching the three phase 115 VAC power to stations 1, 2, 3A, 7A, 8 and 9. This panel receives power from the 115 VAC ESS and non-ESS buses, switches it via ACIU controlled relays, and then routes it directly to the store stations.

f. Overcurrent Protection Panel No. 1 - The Overcurrent Protection Panel is responsible for monitoring the station 3, 5 and 7 control signals (TRIP ENABLE and POWER ON COMMAND) and providing three phase 115 VAC power to those stations when (1) POWER ON COMMAND high, (2) TRIP ENABLE low, and (3) the 115 VAC current to the store station does not exceed some preset bound.

6.2.4.3 Video Switch System - The video switch (figure 6.9) is a reconfigurable network (via switches) designed to link the video signal sourced at a store to the display equipment in the cockpit or to other stores. These stores include any video weapon or pod mounted at stations 1-9 (including 3A and 7A), the Navigation Pod mounted on the Right Hard Point (RHP), and the Targeting Pod at the Left Hard Point (LHP). Acting only as a sink, the display equipment includes the Programmable Display Generator (PDG) which is the video signal processor of the Multifunctional Display Set (MFDS), and the Head-Up Display (HUD). All switching in the video switch is controlled by discretes from the ACRIU and the DEEU (Data Entry Electronic Unit).

6.2.4.3.1 Functional Description - The video switch consists of three buses (RHP, LHP and PDG), nine ACRIU controlled switches, one ACIU controlled switch, and three DEEU controlled switches. The nine ACRIU controlled switches are responsible for switching the store video signals from store stations 1-9. As illustrated in figure 6.10, the ACRIU uses two discretes (Sel Video A, Sel Video B) to toggle the store video signal switch between the following four states: (1) off, (2) LHP Bus, (3) RHP Bus, and (4) PDG Bus. The ACIU controlled switch is responsible for linking the RHP (Target Pod) with the RHP Bus. Using one discrete (Sel Video RHP), the ACIU enables and disables the video link between the RHP bus and the RHP (Target Pod). The DEEU controlled switch to the RHP (Target Pod), these two mutually exclusive states are: (1) HUD, and (2) PDG. At the LHP (Navigation Pod), one switch connects the LHP to the LHP Bus or the HUD, and the other switch links the LHP to the PDG or LHP Bus. Elements of the Video Switch are described below:

a. Left Wing Video Switch - The Left Wing Video Switch houses the store video switches for stations 1, 2, 3, 3A and 4. Controlling these switches are five pairs of discretes from the corresponding station RIUs. Depending upon the state (that is, open or ground) of these two discretes, the store video switch will connect the store video to one of the following: (1) Open, (2) PDG Bus, (3) LHP Bus, or (4) RHP Bus. Figure 6.11 illustrates this switching scheme.

b. Right Wing Video Switch - The Right Wing Video Switch houses the store video switches for stations 6, 7, 7A, 8 and 9. Controlling these switches are five pairs of discretes from the corresponding RIUs. Depending upon the state of these two discretes, the store video switch will connect the store video to one of the following: (1) Open, (2) PDG Bus, (3) LHP Bus, or (4) RHP Bus.

c. Central Video Switch - The Central Video Switch houses the station 5 ACRIU controlled store video switch, the ACIU controlled RHP video switch, and the DEEU controlled RHP/HUD, LHP/HUD and LHP/PDG switches. The station 5 store video switch provides station 5 video to the LHP, RHP, and PDG buses by the same control process described above for the other switches. The LHP video switch toggles the Target Pod video between the HUD and RDG. Control of this switch is provided by the DEEU enabled discrete LHP/HUD VIDEO SELECT. The other two DEEU enabled switches control the distribution of the Navigational Pod Video. The RHP/HUD switch toggles NAVIGATION POD VIDEO between the HUD and the RHP Bus, and the RHP/HUD switch links NAVIGATION POD VIDEO to either the HUD or RHP Bus.

d. PDG Bus - The PDG Bus provides a video link from all of the store video switches (located in the Left Wing, Right Wing, and Central Video Switches) to the PDG.

e. LHP Bus - The LHP Bus provides a video link from all of the store video switches (located in the Left Wing, Right Wing, and Central Video Switches) to LHP/HUD and LHP/PDG switches in the Central Video Switch. As illustrated in figure 6.11, the LHP Bus can accommodate store-to-store video.

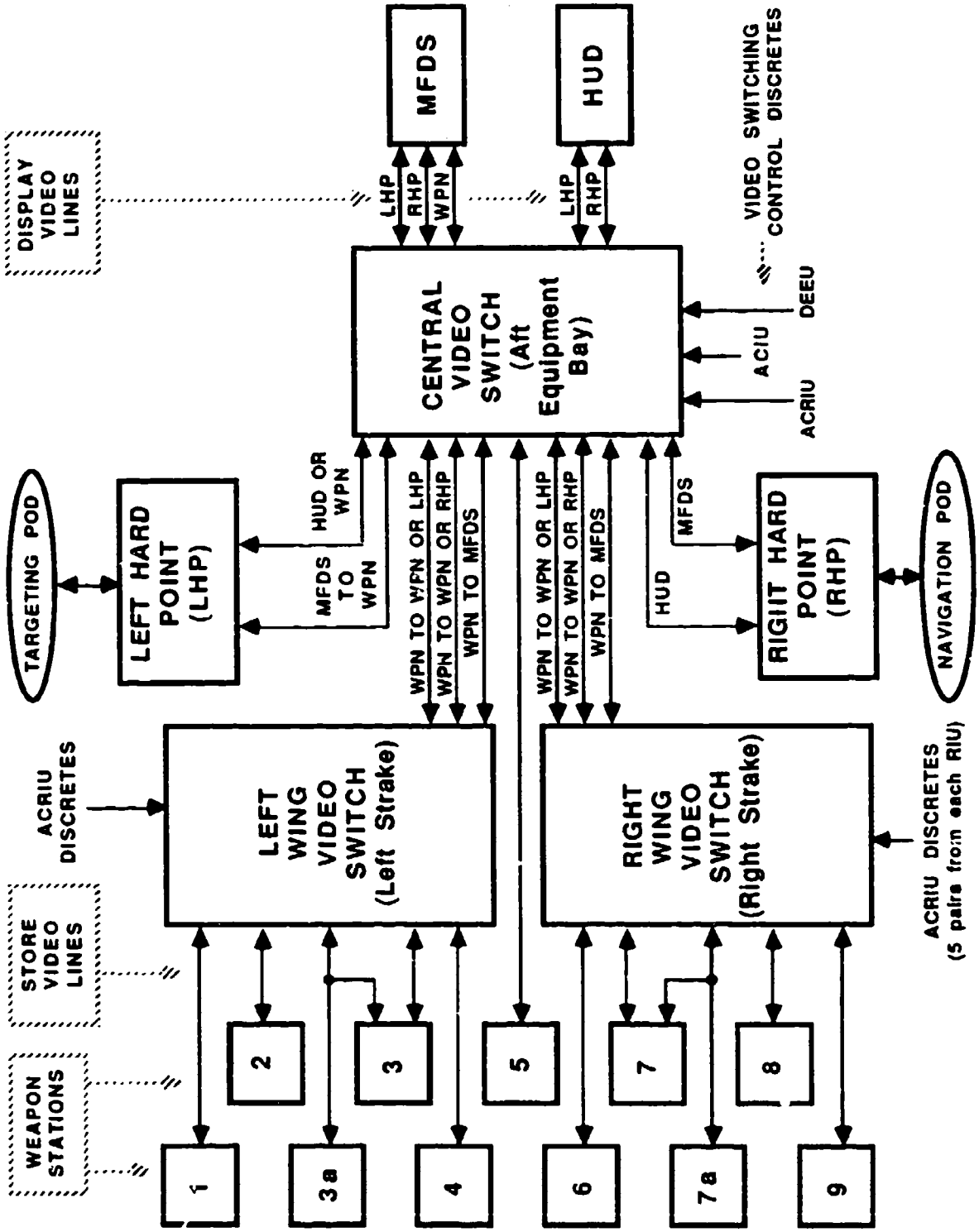

FIGURE 6.9 Video Switch Functional Diagram

f. RHP Bus - The RHP Bus provides a video link from all of the store video switches (located in the Left Wing, Right Wing, and Central Video Switches) to the RHP video switch in the Central Video Switch. Like the LHP Bus, the RHP Bus can also accommodate store-to-store video.

6.2.4.3.2 Block 25 Configuration - The Block 25 F-16 C/D only partially utilizes the capacity of the Video Switch. Stations 3, 4, 6 and 7 (Maverick Certified Stations) are the only switches which are fully video capable. As for the other stations, the air-to-air stations have wiring provisions for video, but station 5 (the centreline station) does not. Stations 2, 3A, 7A, and 8 have a video line and the two video control lines (SEL VIDEO A & SEL VIDEO B) out to the adapter/launcher disconnect. At the Wingtip air-to-air stations, stations 1 and 9, three lines terminate at the wing/launcher disconnect. A summary of the video switch functions in Block 25 aircraft is as follows:

Weapon Video from stations 4, 5, 6, or 7 to the MFDS
Navigation Pod Video from the RHP to the MFDS
Target Pod Video from the LHP to the MFDS
Navigation Pod Video from the RHP to the HUD
Target Pod Video from the LHP to the HUD
IR Maverick Video from stations 4, 5, 6, 7 to the Target Pod

Note that these operational configurations of the Video Switch are a function of both the partial implementations of the switch in the F-16 C/D and current store requirements.

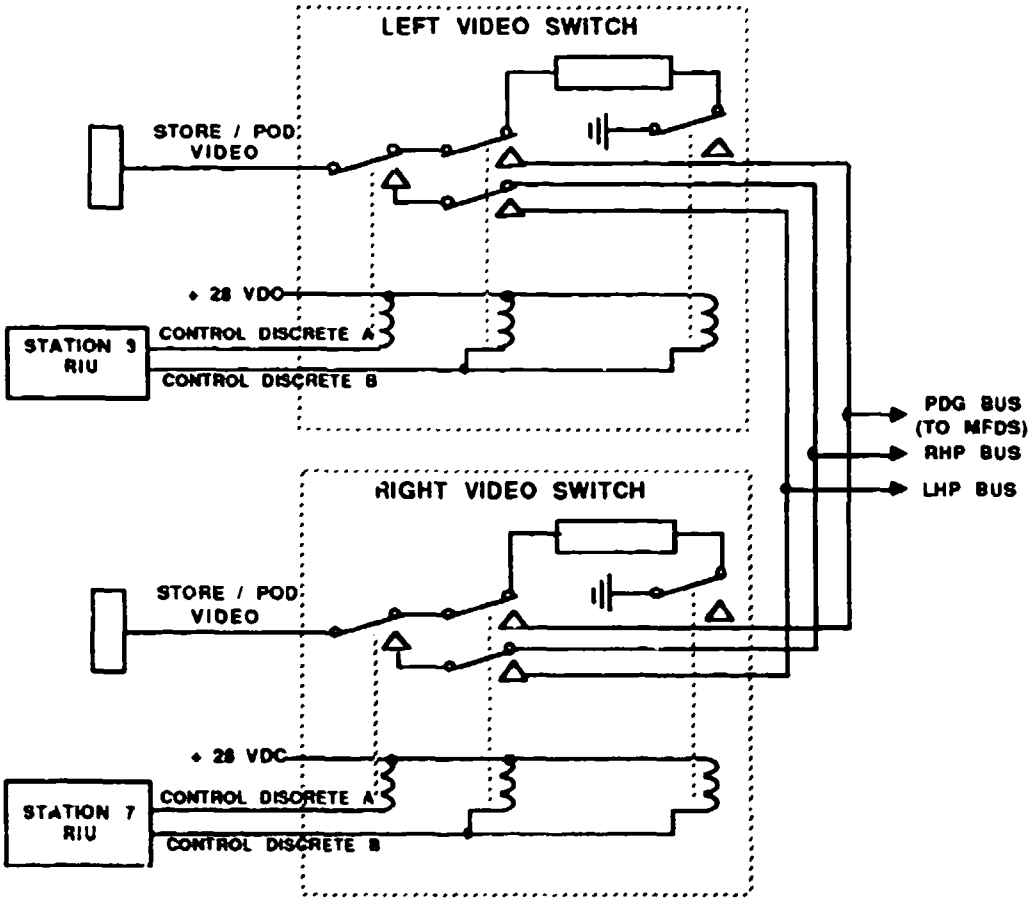

FIGURE 6.10 F-16 Video Control

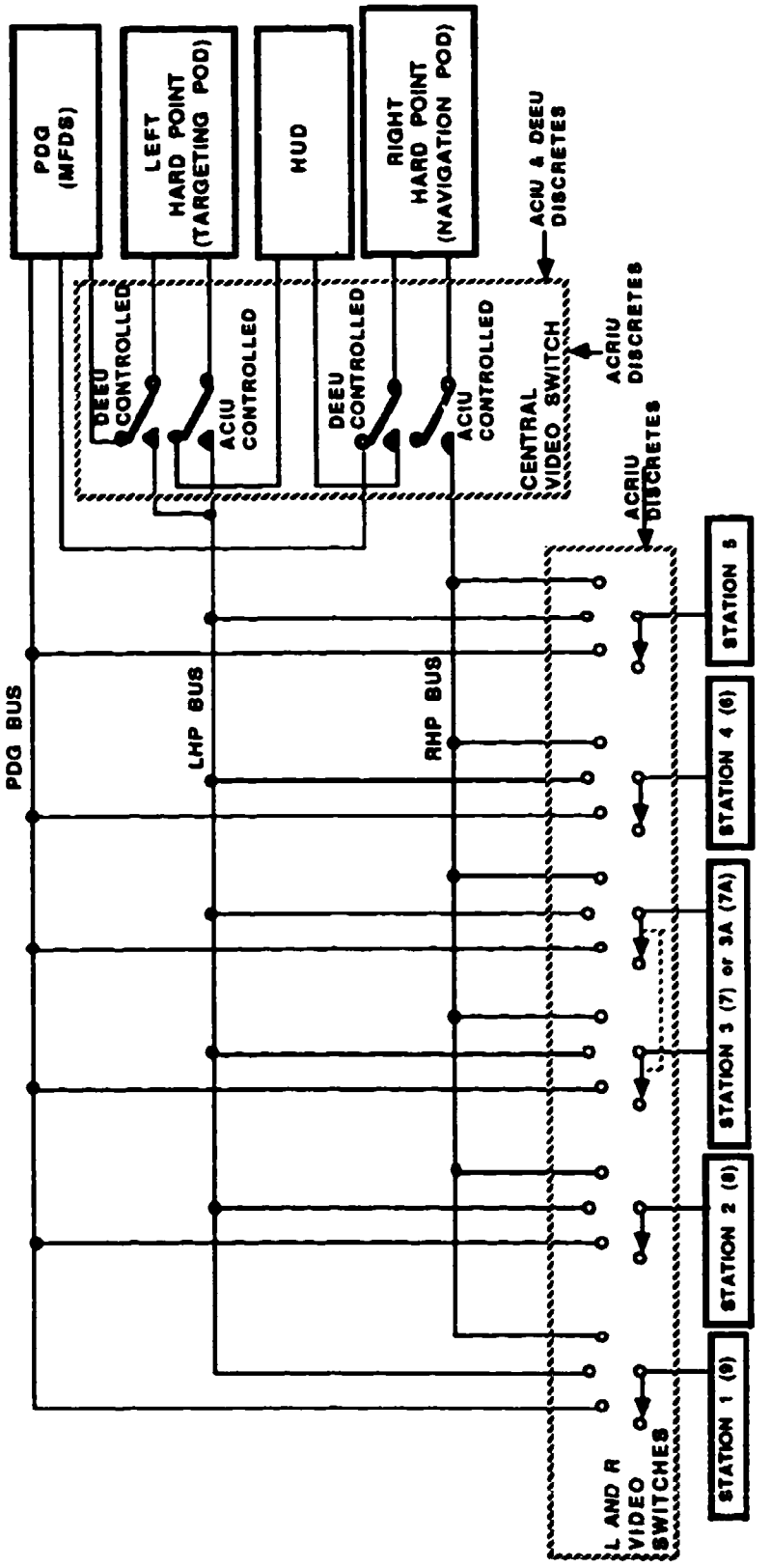

FIGURE 6.11 F-16 Video System

6.3 IMPLEMENTATION REQUIREMENTS Two overall requirements imposed on the 1760 Implementation Case Study which particularly influenced the study results were: to make maximum use of existing equipment, and accommodate both the current and future stores defined for the F-16 C/D. The first requirement forces a designer to augment the existing aircraft configuration with a 1760 capability rather than develop a new independent approach. The second requirement necessitated a dual capability at each store station. This resulted in a number of engineering compromises. From a comprehensive review of the store loadouts and associated control requirements presented in paragraph 6.2.2, it was determined that a Class IA interface was required at stations 3, 5, and 7, a Class I interface at stations 4 and 6, and a Class II interface at the air-to-air stations. The major system modifications found to be required to implement the desired capabilities are listed below:

a. Provide redundant MIL-STD-1553 digital buses to the ASIs at the air-to-air stations

b. Provide two RF lines (HB1 and HB2) to the ASI at each air-to-ground station and one RF line (HB1) to the ASI at each air-to-air station

c. Provide a second video line to the ASIs at stations 4, 5, and 6

d. Provide a single video line to the ASIs at the air-to-air stations

e. Provide the second and third phases of the 115 VAC to the ASIs at the air-to-air stations

f. Provide a second 28 V, 10 A DC source to all ASIs (total of 20 A/station)

g. Provide independent AC and DC power control to all ASIs

h. Provide 28 VDC auxiliary power to the ASIs at stations 3, 5, and 7

i. Provide 1760 compatible signals currently routed to the existing ASIs to each 1760 interface as required

j. Physically locate the primary and auxiliary 1760 connectors at the station 3, 5, and 7 ASIs; and the primary connector at all other ASIs

k. Provide the additional ACIU software to control MIL-STD-1760 stores and to implement the changes in the Operational Flight Program required by the suggested modifications

l. Provide additional ACIU hardware to support the extra processing load and modified MIL-STD-1553 hardware

6.3.1 Discussion of Required Modifications. The following paragraphs provide an approach to the implementation of a MIL-STD-1760 capability in the case study aircraft, which fulfill the twelve requirements defined above in paragraph 6.3. In consonance with design constraints, current and planned MIL-STD-1760 provisions by the F-16 prime contractor were used to the maximum extent possible. Figure 6.12 shows the configuration of MIL-STD-1760 interface classes which will be implemented at each of the F-16 weapon stations in this case study.

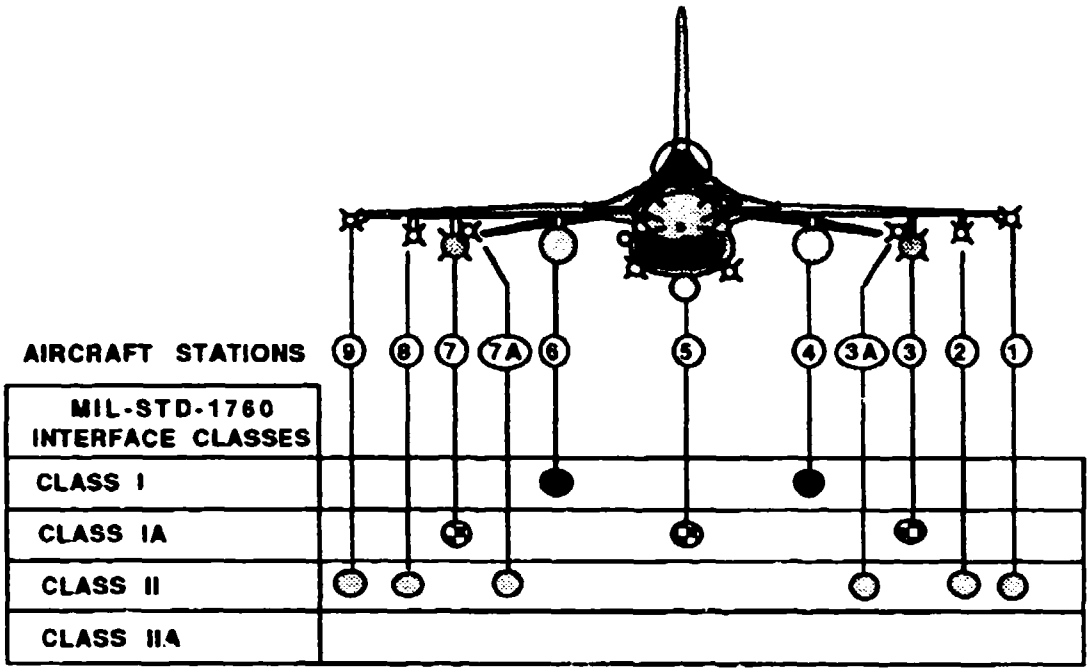

FIGURE 6.12 F-16 Case Study Configuration of MIL-STD-1760 Interface Classes

6.3.1.1 Modification #1: Provide Redundant MIL-STD-1553 Digital Buses to the Aircraft Station Interface (ASI) at the Air-to-Air Stations - A MIL-STD-1553 capability could be provided by either extending the A-MUX or W-MUX out to the air-to-air stations. While there are advantages to extending the A-MUX, particularly relative to control of AMRAAM, long-term considerations favor the W-MUX. The W-MUX in the F-16 C/D is a four wire system which currently supports three communication protocols, including MIL-STD-1553. Therefore compliant twisted-shielded pairs require to be run from the W-MUX station matrices, through the wing pylon disconnects, out to the respective ASIs for stations 1, 2, 3A, 7A, 8 and 9. The 1553B lines have already been taken from the station matrices to pylon disconnects for the air-to-ground stations. Figure 6.13 indicate the changes (dashed lines) required to provide 1553B capability to the air-to-air ASIs. It should be noted that the MUX lines in the Station Matrix primarily serve as two of the four lines required for the GD dual simple W-MUX. Any analyses of bus utilization, therefore, will have to include current W-MUX traffic. The dual simplex system will continue to be used to command state transitions in the RIUs. Two other points are of significance: (1) the 1553B lines are transformer coupled to the W-MUX inside of the Station Matrix such that the extension to the ASI is a legitimate stub; and (2) the ACIU Bus Controller is capable of dual simplex, GD 1553 and 1553B protocols so that hardware modifications, other than extending the stub to the ASI, should not be required.

TABLE 6.1 Location of W-MUX Station Matrices

Station	Location of W-Mux Station Matrix
STA 1 & 2	Left wing behind flap seal 5425
STA 8 & 9	Right wing behind flap seal 5429
STA 3	Left wing behind flap seal 5429
STA 7	Right wing behind flap seal 6430

Some potential issues associated with this modification include: (1) shortages of ACIU processing power/memory; (2) software (OFP) modification/verification capabilities; and (3) availability of space in the current wing disconnects to route the 1553 buses.

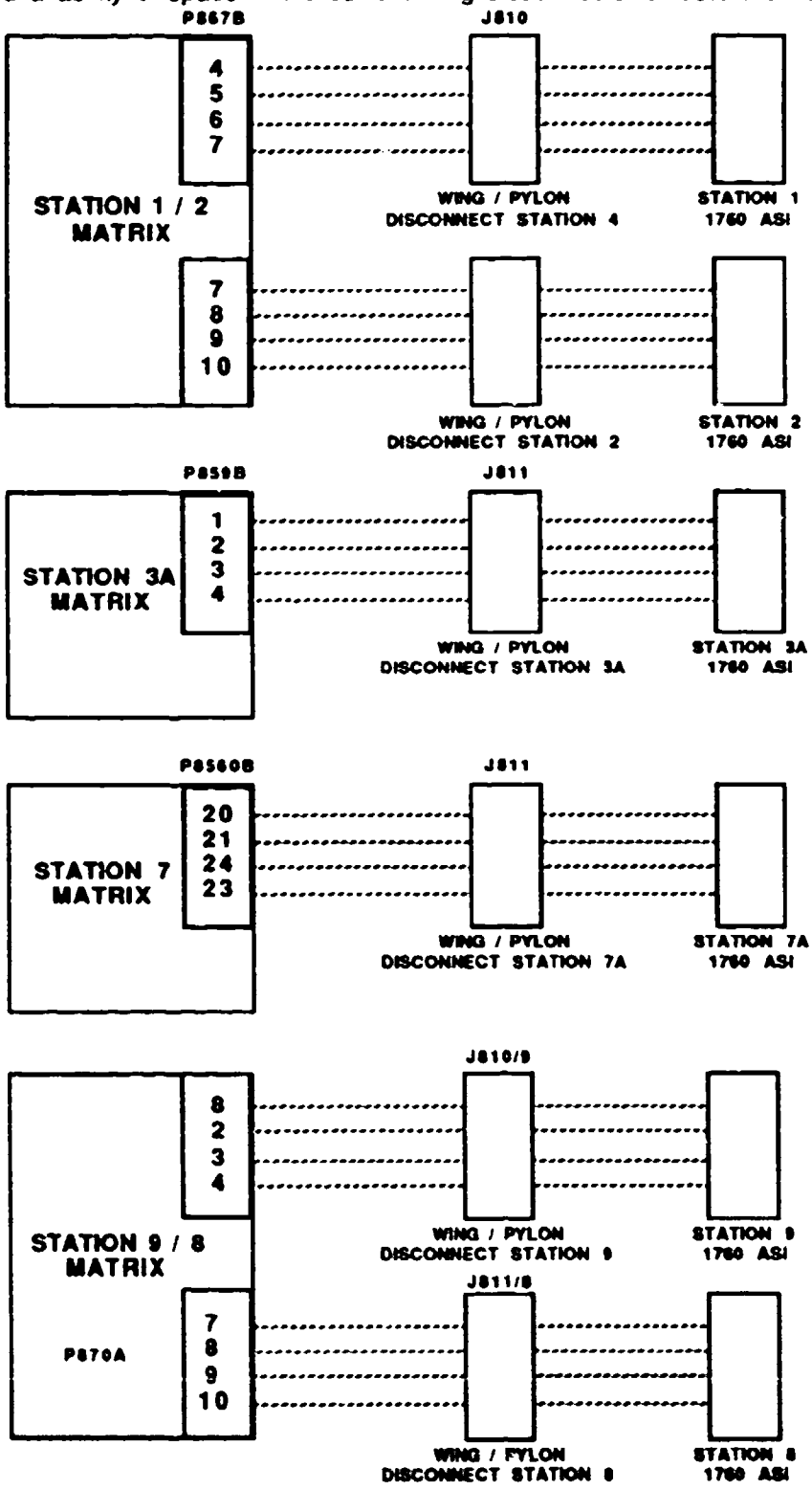

FIGURE 6.13 Extension of 1553 to Stations 1,2,3A,7A, 8, and 9

6.3.1.2 Modification #2: Provide Two RF Lines (HB1 and HB2) at the Air-to-Ground ASIs and One RF Line (HB1) at the Air-to-Air ASIs - MIL-STD-1760A requires two 50-ohm RF lines (HB1, 20 MHz - 1.6 GHz and HB2, 20 Hz - 20 MHz) for Class I interfaces, and one RF line (HB1, 20 MHz to 1.6 GHz) for class 2 interfaces. These cover the requirements for air to ground and air to air respectively At this time, eight provisioning RF lines are in the F-16 C/D. These lines extend from the aft equipment bay to the wing disconnects at stations 3, 4, 6 and 7 (two lines per station). The modifications will extend these eight lines from the wing disconnects to stations 3, 4, 6 and 7, and two additional 50-ohm lines run from the aft equipment bay to the ASI at station 5. A single 1.6 GHz, 50 ohm line would run from the aft equipment bay to each of the four air-to-air ASIs. An RF switching capability would be installed in (or near) the aft equipment bay to provide MIL-STD-1760 recommended connectivity; that is a simultaneous transfer of one Type B signal and two Type A signals between ASIs and internal aircraft equipmsnt, plus one Type A signal between any two ASIs. Switches would be controlled by discretes generated locally by an RT/Logic Unit added to the W-MUX. Figure 6.14 is a functional depiction of an alternative switching network for providing the RF connectivity recommended by MIL-STD-1760. As a matter of fact, it will provide slightly more capability than required by 1760 in that it includes the option of a third simultaneous 50-ohm, 20 MHz connection to aircraft subsystems. This switching matrix would be packaged as a single unit and housed in the aft equipment bay. Running from the switching unit would be two 50-ohm lines to each air-to-ground station (HB1 and HB2) and one 50-ohm line (HB1) to each of the air-to-air stations. Two types of switches are required in the switching unit. This is because of differences in the electrical characteristics between HB1 and HB2. Figure 6.15 illustrates a switch which is suitable for Type A (20 Hz - 20 MHz) signals. As indicated in the figure, HB2 lines have access to three internal buses, plus a characteristic impedance termination. Two discretes are required, therefore, to control the four possible states. In this alternative, these discretes are generated by the station RIU in response to a CIU command on the W-MUX -- in a manner analogous to the way video switching is currently performed. The Type B, 1.6 GHz signal lines cannot be treated so casually. The insertion loss, transmission loss and fidelity requirements of this signal make switching much more difficult. It can be assumed, however, that HB1 can be effectively switched to a transmission line network serving Type B signal users, to any one of the three networks serving Type A signal users, and to a characteristic impedance termination -- or five states. It can also be assumed, then, that three discretes would be required to control each HB1 switch. Under this alternative these discretes would be provided by the station RIUs. Figure 6.16 illustrates the wiring changes required to implement this central switching scheme. As shown in this figure, it requires extending the two provisionary RF lines out to the ASI at stations 3, 4, 6, and 7, running HB1 and HB2 from the aft equipment bay out to the ASI at the air-to-air stations, and providing the four HBW lines to the avionic equipment. This implementation has several advantages: (1) switches are centrally located which would reduce installation and maintenance costs; (2) switches can be consolidated and line lengths kept electrically short; and (3) the 1.6 GHz (HB1) lines could be configured to enable essentially point-to-point transmissions, alleviating VSWR and unnecessary insertion lost problems. Switching is controlled in this design by discretes generated by the RIUs. These discretes would be generated by an RT/Logic unit connected to the W-MUX. The entire assembly would be physically attached to the switching unit. A potential disadvantage is the requirement for physical space in the aft equipment bay for the RT/Logic unit and the requirement for a dedicated RT 1553 address. Potential issues associated with implementation of this design include:

a. Availability of space in the aft equipment bay to implement the switching matrix

b. Availability of additional discretes (Five each from the CRIUs and three each from the MRIUs)

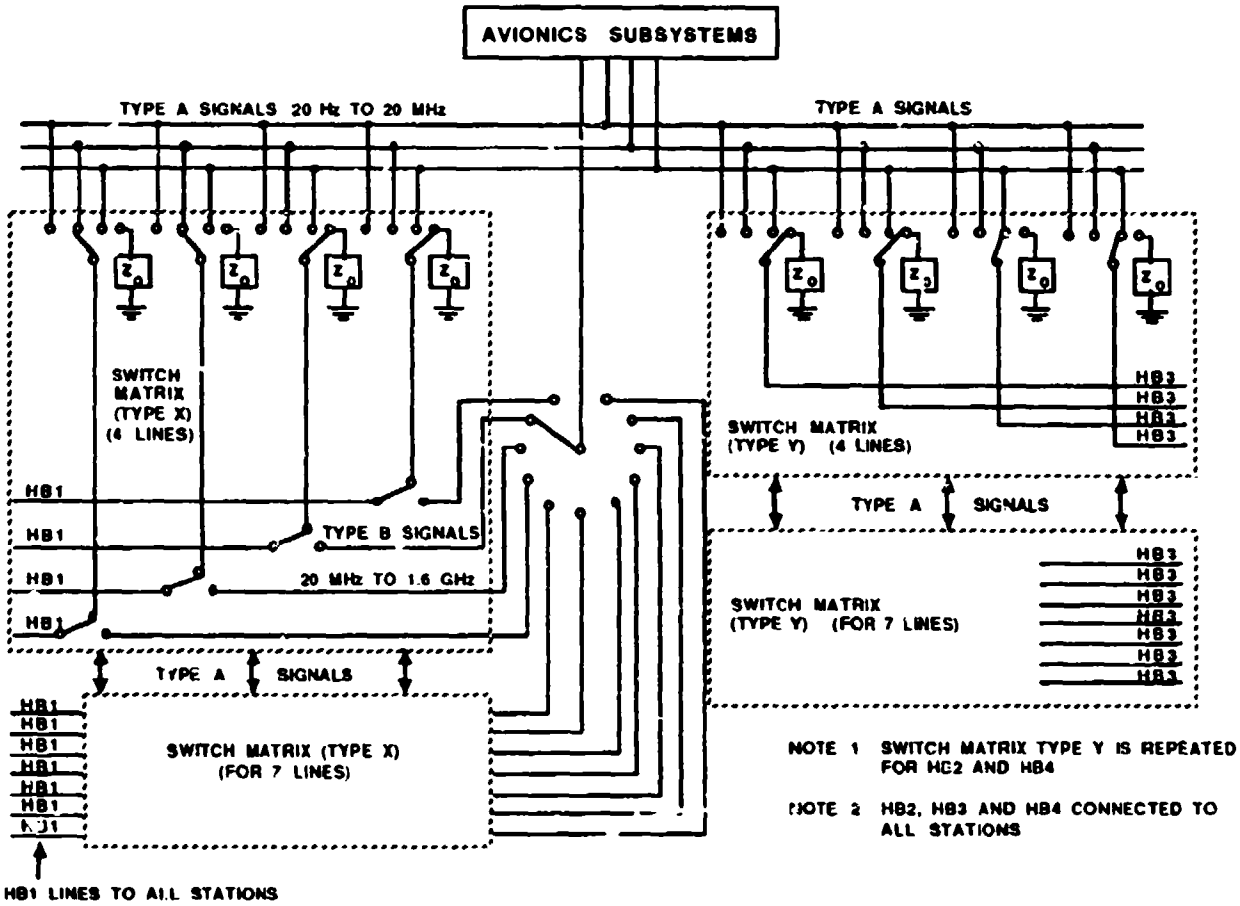

FIGURE 6.14 Centralized High Bandwidth Switching Network

c. Availability of space in air-to-air station wing disconnectors for the additional discretes

d. Availability of space in the station 5 fuselage disconnect to accommodate the three additional discretes and two additional RF lines

e. Routing of HB1 lines and discretes from the air-to-air stations to the aft equipment bay may require deskinning the aircraft

f. Selection criteria for switching elements

g. Technology to meet 1760 1.6 GHz signal transfer requirements

h. CFP Software modifications

i. Availability of RT addresses

j. Network costs; particularly for seemingly unneeded capability

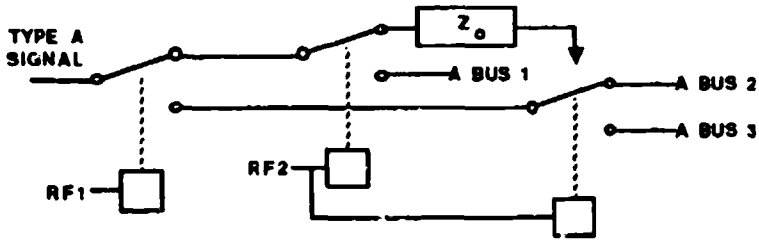

SWITCH TRUTH TABLE		
INPUTS		
RF1	RF2	STATE
0	0	GND
0	1	A BUS 1
1	0	A BUS 2
1	1	A BUS 3

FIGURE 6.15 Digital High Band Frequency Switch

An alternative to the selected approach which was rejected, but is something to track, is to employ Frequency Division Multiplexing (FDM) techniques. This alternative would be to install a single 50 ohm line from each ASI to the aft equipment bay to accommodate the 1.6 GHz signals, along with a FDM to provide the required connectivity for the 20-MHz lines. The FDM scheme would serve as a medium for transmission of the Type A signals HB2, HB3, and HB4. HB1 would be handled as in Alternative 1. There is significant work being done in this area, particularly in conjunction with the high bandwidth/low noise possibilities available from fiber optics. It is not felt, however, that this technology is sufficiently mature to be a viable alternative at this time.

6.3.1.3 Modification #3: Provide a Second Video Line to the ASIs at Stations 4, 5, and 6 - To satisfy the requirements of a MIL-STD-1760A Class I interface, two 75-ohm, 20 MHz (HB3, HB4) lines must be provided at an Air-to-Ground ASI. The currently planned F-16 C/D 1760 configuration provides these two lines at stations 3 and 7, but only a single line at stations 4, 5 and 6. This modification carries existing provisions to the ASI and adds the additional lines to stations 4, 5, and 6. Video lines would be run from the station 4 ASI to the Right Video Switch, the station 5 ASI to the Central Video Switch, and from the station 6 ASI to the Central Video Switch. Control would be provided by discretes generated by the RT/Logic unit added to the W-MUX. One additional relay would be added to each switch matrix. Figure 6.17 illustrates the implementation of the additional video line at stations 4, 5, and 6. In addition to the indicated video lines and control discretes, one switching element would also have to be installed in each of the existing three video switches (Right, Left, Central). Figure 6.18 illustrates this video switching unit. The discretes to switch both the added and existing video lines would be generated by an RT/Logic unit on the W-MUX, possibly the same unit providing discretes for switching the RF lines. This approach is illustrated in figure 6.19 and was previously identified in the discussion of Modification 6.3.1.2. The advantage of this approach is that it is adaptable to future growth and eliminates the requirement for new (and some existing) discretes from station RIUs. The disadvantage is that modifications are being made to existing flight-qualified hardware and software. This could be difficult to justify, but the alternative of control being provided partially from station RIUs and partially from the added RT/Logic unit would be unacceptable. The major issues (associated with this approach) are availability of space for routing the control discretes from the RT/Logic Unit (probably in the aft equipment bay) to the Left, Right and Central switching units, and availability of an RT address. Other issues include:

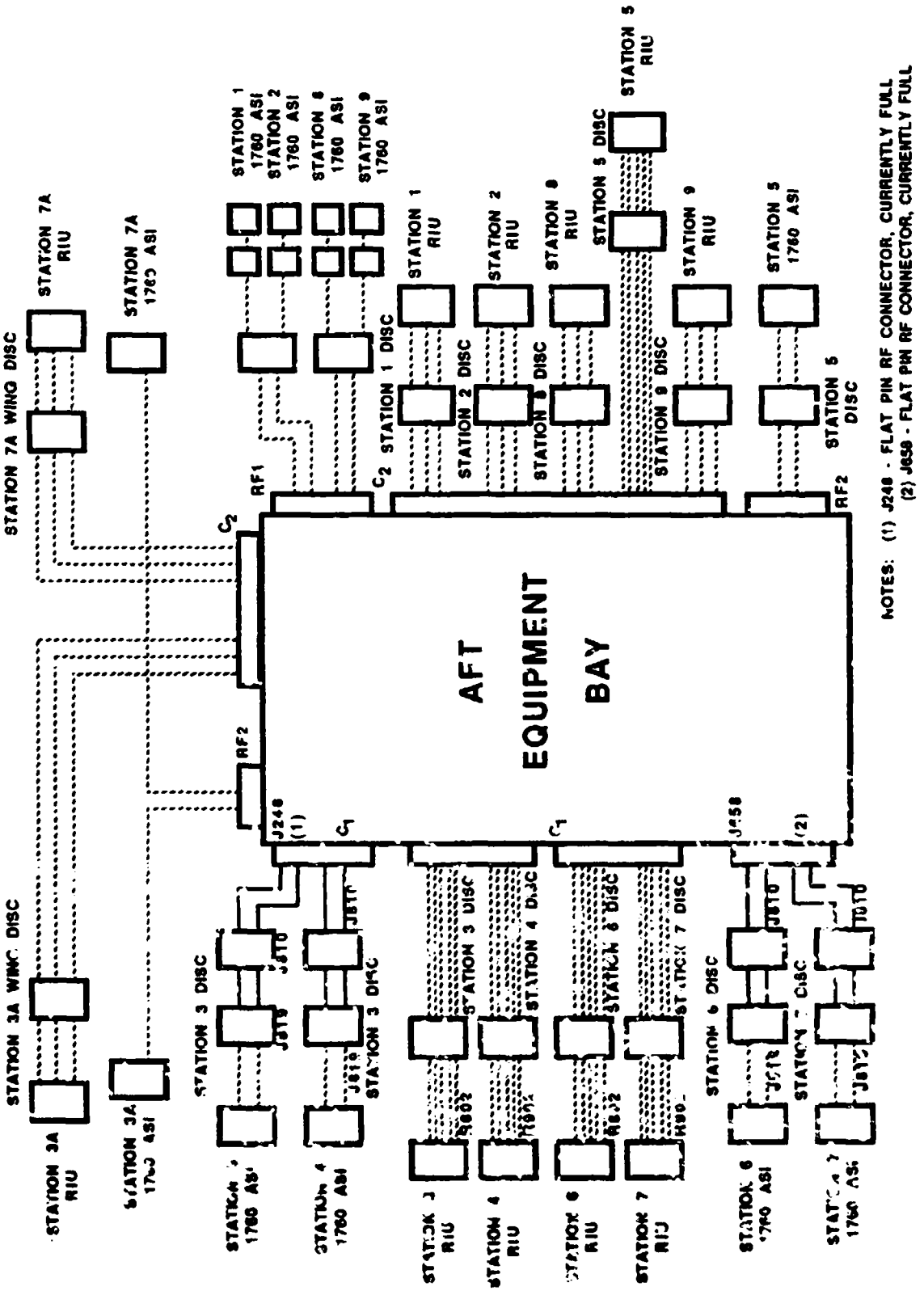

FIGURE 6.16 Proposed F-15 C/D RF Network

a. OFP modifications

b. Bandwidth of existing video lines, that is can they meet the requirements of HB3 and HB4

c. Space to route the additional video lines and control discretes through the pylons, the wing disconnects

d. Compatibility of 1760, 75-ohm system with the current F-16, 96-ohm video system

e. Definition of existing video system

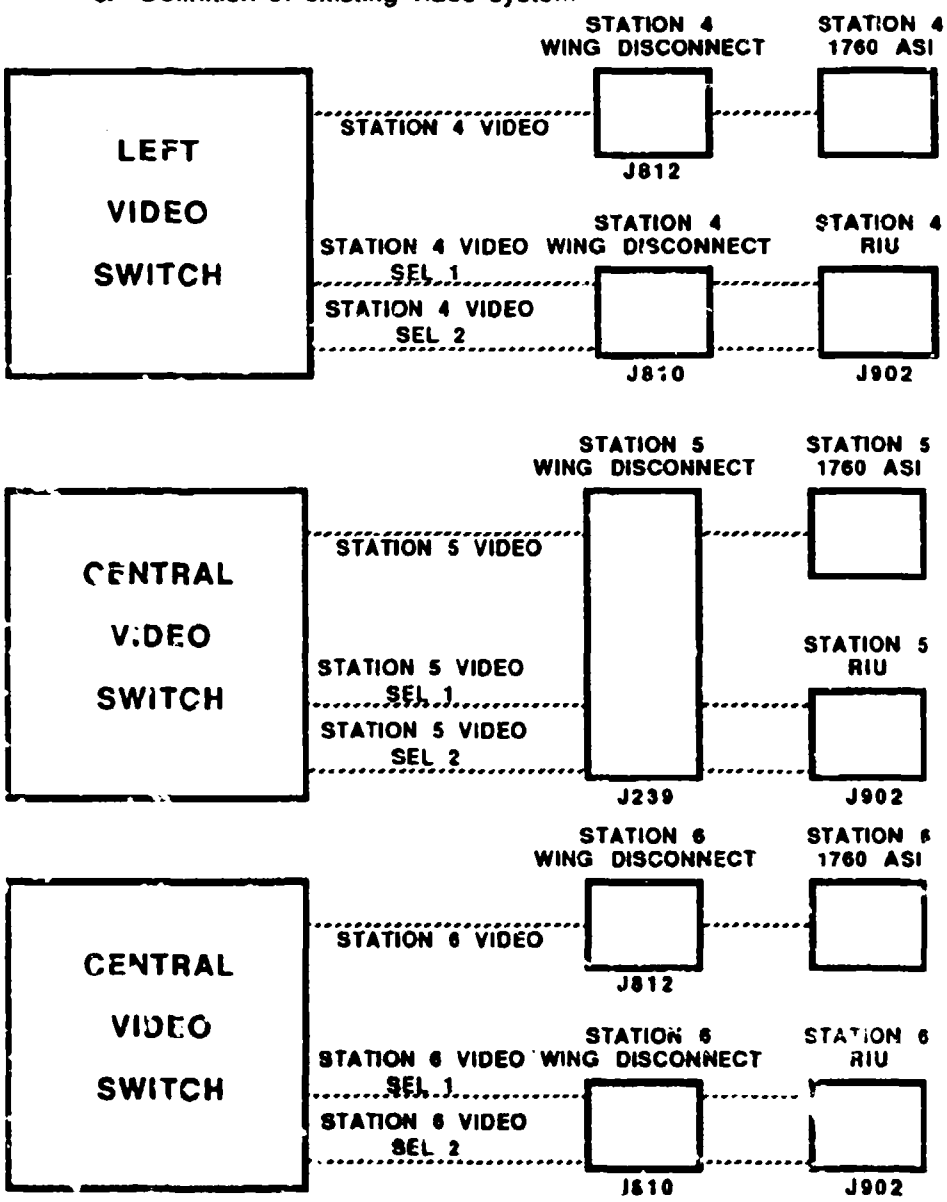

FIGURE 6.17 Second Video Line to STAs 4, 5, and 6 1760 ASIs

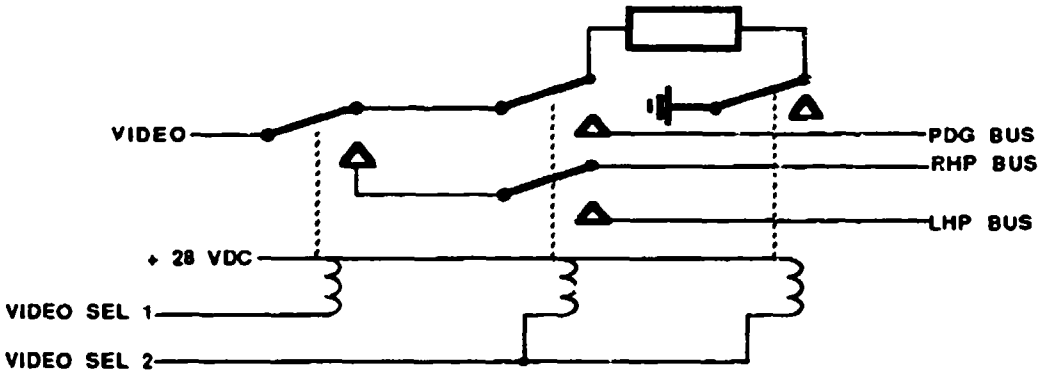

FIGURE 6.18 Functional Representation of a Video Switching Unit (Element)

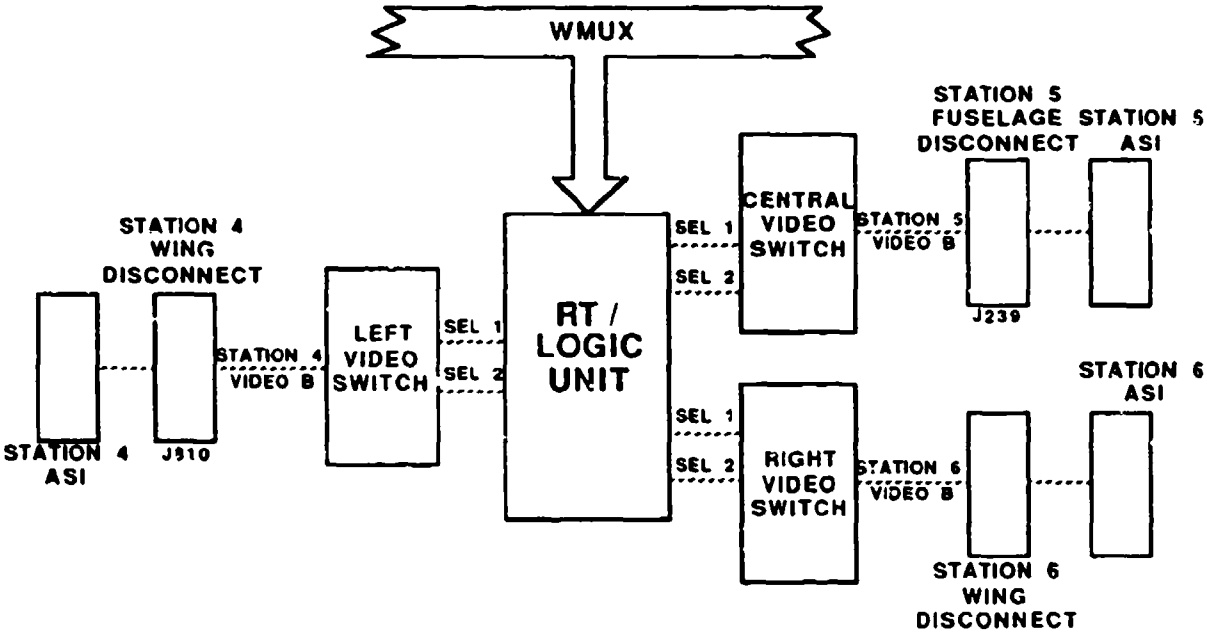

Note: Design also requires one additional pair of discretes between the WMUX RT and Central Video Switch (STATION 5 VIDEO A SEL 1 & 2), five additional discrete pairs between the MUX RT and Left Video Switch (STATION 1 VIDEO SEL 1 & 2, STATION 2 VIDEO SEL 1 & 2, STATION 3 VIDEO A SEL 1 & 2, STATION 3 VIDEO B SEL 1 & 2, STATION 4 VIDEO SEL 1 & 2), and five additional pairs of discretes between the WMUX RT and Right Video Switch (STATION 9 VIDEO SEL 1 & 2, STATION 8 VIDEO SEL 1 & 2, STATION 7 VIDEO A SEL 1 & 2, STATION 7 VIDEO B SEL 1 & 2, STATION 6 VIDEO SEL 1 & 2) to control existing video lines.

FIGURE 6.19 Video to Stations 4, 5, and 6

6.3.1.4 Modification #4: Provide a Single Video Line to the ASIs at the Air-to-Air Stations - This modification would provide the required video capability for a Class II Interface at stations 1, 2, 3A, 7A, 8 and 9. The required change will be to connect a 75 ohm, 20 MHz line from the video switch to each of the ASI. This is a simple modification which extends existing video lines to the 1760 ASI. Figure 6.20 functionally illustrates routing of these video provisions. The existing video provisions are located as follows:

STATION	CONNECTOR	LOCATION
STA 1	J528	Left wing wiring harness (See Note)
STA 2	J528	Left wing wiring harness
STA 3A	J521	Left wing wiring harness
STA 7A	J621	Right wing wiring harness
STA 8	J811	Wing/Pylon disconnect
STA 9	J628	Right wing wiring harness

Note: The wing wiring harness is located in the center of the wing behind the leading edge flap.

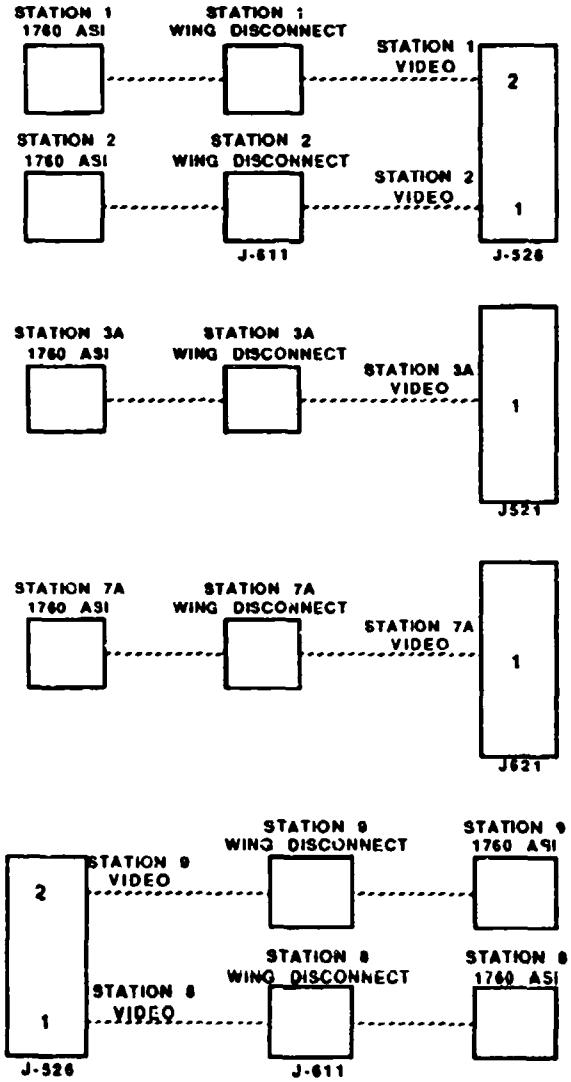

FIGURE 6.20 Routing to Stations 1, 2, 3A, 7A, 8, and 9 1760 ASIs

The discretes which control video switching would be provided by an RT/Logic unit on the W-MUX Bus. This could, but would not have to be, the same RT/Logic unit used to control the RF network. The existing discrete provisions are located as follows:

STATION	CONNECTOR	LOCATION
STA 1	J527A	Left wing wiring harness
STA 2	J527A	Left wing wiring harness
STA 3A	J519A	Left wing wiring harness
STA 7A	J627A	Right wing wiring harness
STA 8	J627A	Right wing wiring harness
STA 9	J627A	Right wing wiring harness

Figure 6.21 illustrates the routing of these discretes. The advantages to this alternative are that it is technically simple and uses existing provisions to the maximum extent. The disadvantage, again, is that an existing, certified capability will have to be abandoned if RF/Video controls are consolidated and care will have to be taken to avoid cross talk from RF to Video. Implementation issues are the availability of space to implement the RT/Logic Unit and to route the appropriate discretes to the video switches, the difference in the characteristic impedance of the current video lines (95 ohms), and the MIL-STD-1760A requirement for 75 ohms, 20 MHz lines.

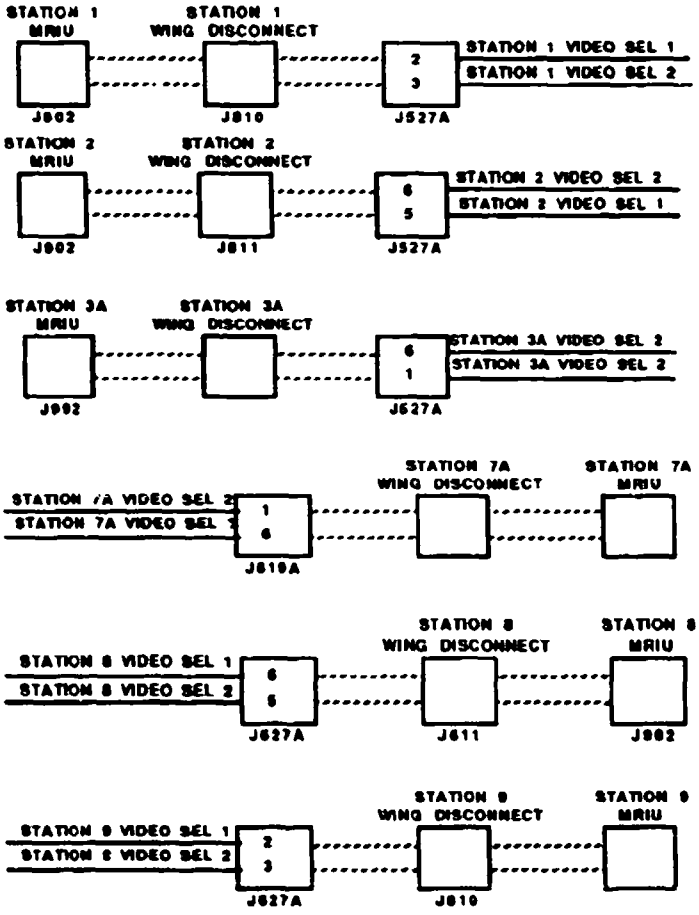

FIGURE 6.21 Routing of Video Switch Discretes to Stations1, 2, 3A, 7A, 8, and 9 MRIUs

6.3.1.5 Modification #5: Provide the Second and Third Phases of 115 VAC to the ASIs at the Air-to-Air Stations - Three phase AC currently extends to existing connectors near each store station. For the air-to-air stations, however, only a single phase is carried through to the ASI. This modification would provide the second and third phases by running the two wires, currently terminated in a provisioning connector within the aircraft, out to the station ASIs via the wing pylon disconnect. As indicated in figure 6.22, Modification #5 requires running two wires (per station) from the provisioning connectors listed below through the wing/pylon disconnect connectors (also listed below), and on to the ASI. The provisioning connectors are all located within the wing near the disconnects.

Station	Connector	Wing-Pylon Connector
STA 1	J529	J610
STA 2	J530	J611
STA 3A	J522	J611
STA 7A	J622	J611
STA 8	J630	J611
STA 9	J629	J610

Issues associated with adding the 115 VAC power phases are related to space in the air-to-air wing-pylon disconnect connectors. Another potential issue, which is equally associated with DC provisions, is whether or not a more sophisticated power management system may be required to prevent overloading existing aircraft circuits.

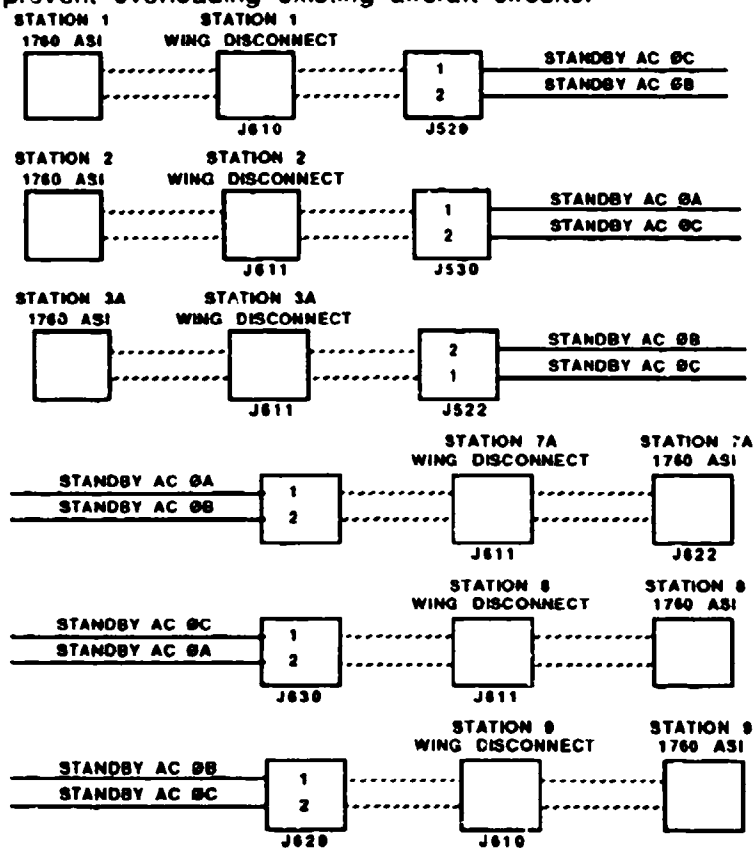

FIGURE 6.22 Routing of Second and Third 115 VAC Phases to Stations 1, 2, 3A, 7A, 8, and 9

6.3.1.6 Modification #6: Provide Second 28 VDC 10 A Source to All ASIs (total of 20 A per Station) - MIL-STD-1760 requires two independently controlled 28 VDC power sources at each ASI (total of 20 amps). The current aircraft configuration features a single 10-14 amp source at each station. There is an indication, however, that the circuit breaker setting is an arbitrary one and that a second 10-amp 28 VDC source could be provided by adding another line and changing the circuit breaker. It appears from a review of available information that the total current limitation of 14.4 amps at the air-to-ground stations and 10.8 amps at the air-to-air stations are due to circuit breaker limitations. It is assumed, therefore, that to provide the needed 20 A of 28 VDC to 1760 interfaces simply requires implementing higher current circuit breakers.

6.3.1.7 Modification #7: Provide Independent AC and DC Power Control at all ASIs - Power to ASIs is currently applied through relays in the Store Standby Power Matrices. Relays are controlled by discretes directly from the ACIU. AC and DC are applied simultaneously. Earlier modifications would provide the second and third phases of AC and a second DC source. This modification would provide independent control of 115 VAC, 28 VDC 1, and 28 VDC 2. The recommended design would be to switch the AC and DC power independently in a switch box located in the pylon/launcher using discretes from the station RIU to control switches. The relays providing the power switching would be packaged in a unit which is physically located near the station RIU in the pylon. Using the switching scheme currently employed, the number of switching elements in this unit would be: four for stations 3, 5, and 7, (two for 28 VDC power one and two, one for 115 VAC power, and one for AUX AC); and three for stations 4 and 6, the air-to-air stations (two for 28 VDC power one and two, and one for 115 VAC power). Five discretes from the station RIU would be needed to control power to the ECM certified (3, 5, and 7) stations; the air-to-air stations, and stations 4 and 6 would need three each. The advantages of this alternative are as follows: (1) all changes take place in the pylon or launcher, (2) no existing equipment is modified, and (3) an existing RT on the W-MUX is utilized and, therefore, another subscriber to the W-MUX is not required. The major issues are space in the pylons and/or launchers, and availability of required RIU generated discretes.

6.3.1.8 Modification #8: Provide 28 VDC Auxiliary Power to the ASIs at Stations 3, 5 and 7 - It was indicated earlier that a Class I interface should be implemented at the air-to-ground ASIs. It is further suggested that Class IA interfaces be implemented at stations 3, 5 and 7. This means 28 VDC and 115 VAC auxiliary power must be available at those stations. Three phase 115 VAC is already planned so this modification would implement a single 28 VDC, 30 amp source at stations 3, 5, and 7. An additional power relay off the DC feed bus also would be added. Control would be provided by discretes generated in the respective RIUs or by the RT/Logic unit which has been suggested as one of the alternatives for controlling the RF and video lines. An analysis of the power system needs to be conducted in order to assess the ability of F-16 to generate the additional power required to provide auxiliary 28 VDC interfaces at stations 3, 5, and 7. Therefore, recommendations regarding this alternatives are TBD pending a complete power system analyses which is not within the current scope of this study.

6.3.1.9 Modification #9: Provide 1760 Compatible Signals Currently Routed to the Existing ASIs to each 1760 Interface as required - A number of electrical signals currently being used to control stores through the existing conventional interface are applicable to the 1760 interface as well. This modification would provide the necessary splices to make these signals available to the 1760 ASI. Table 6.2 lists the signals currently available at or near the existing connector at the wing air-to-ground stations which are 1760 compatible. Presented along with the currently assigned name of each signal is its use in the 1760 signal set. Also shown are the origins and destinations of the signal in the pylon, the means by which this signal could be provided to the 1760 ASI, and the stations at which the description applies. Tables 6.3 and 6.4 present the same information for the air-to-air and centerline air-to-ground stations.

TABLE 6.2 F-16 Compatible Signal at Wing A/G Stations (Stations 3, 4, 6 & 7)

F-16 SIGNAL	1760 SIGNAL	ORIGIN	DESTINATION	STATIONS	JUNCTION PROCEDURE
Video A	High Bandwidth 3	Wing Disc J812	Store Disc J907	3/4/6/7	Replace wire with Y junction. Connect single-sided end in the Wing Disc (J812) and conventional connector (J907) and 1760 ASI.
Video B	High Bandwidth 4	Wing Disc J812	Store Disc J907	3/7	Same as High Bandwidth 3
Option 7	Release Consent	RIU Disc P902	Store Disc J907	3/4/6/7	Replace wire with Y junction. Connect single-sided end in the RIU Disc (P902) and the two sides of the Y in the conventional connector (J907) and 1760 ASI.
Gnd	Interlock Return	Wing Disc J812 J813	Store Disc J907	3/4/6/7	Splice off GND/NEUT wire in the pylon. Status 2 Excitation voltage is referenced to the Ground.
Status 2	Interlock	Store Disc J907	RIU Disc P902	3/4/6/7	Replace wire with Y junction. Connect single-sided end in the conventional stroe disc (J907) and two sides of the Y in the RIU connector (P902) and 1760 ASI.
Gnd	Structure Gnd	Wing Disc J812 J813	Store Disc J907	3/4/6/7	Splice off Structure Ground in the pylon.
Gnd/Neutral	Power 1 Return	Wing Disc J812 J813	Store Disc J907	3/4/6/7	Splice off Ground/Neutral in the pylon. Ground and Neutral are tied together in the pylon.
Gnd/Neutral	Power 2 Return	Wing Disc J812 J813	Store Disc J907	3/4/6/7	Same as Power 1 Return
Gnd/Neutral	115V AC Neutral	Wing Disc J812 J813	Store Disc J907	3/4/6/7	Same as Power 1 Return

TABLE 6.2 F-16 Compatible Signal at Wing A/G Stations (Stations 3, 4, 6 & 7) · continued

F-16 SIGNAL	1760 SIGNAL	ORIGIN	DESTINATION	STATIONS	JUNCTION PROCEDURE
Status 3	Aux Interlock	RIU Disc P902	Store Disc J907	3/7	Replace wire with Y junction. Connect single-sided end in the RIU disc (P902) and the two sides of the Y in the conventional connector (J907) and 1760 ASI.
Gnd	Aux Interlock Return	Wing Disc J812 J813	Store Disc J907	3/7	Same as Interlock Return
Gnd	Aux Interlock Return	Wing Disc J812 J813	Store Disc J907	3/7	Same as Structure Ground
Audio	Low Bandwidth	Wing Disc	Store Disc	3/4/6/7	Replace wire with Y junction. Connect single-sided end in the wing disc. The two sides of the Y go to the conventional connector and to the 1760 ASI.
A-Bus	Mux A	J812	--	3/4/6/7	Run twisted shielded wire pair from A Bus in wing disconnect to 1760 ASI (J812/J813)
B-BUS	MUX B	J813	--	3/4/6/7	Run twisted shielded wire pair from B Bus in wing disconnect to 1760 ASI (J812/J813)

TABLE 6.3 F-16 Compatible Signal at Wing A/A Stations (Stations 1, 2, 3A, 7A, 8, & 9)

F-16 SIGNAL	1760 SIGNAL	ORIGIN	DESTINATION	STATIONS	JUNCTION PROCEDURE
28 VDC #5	RELEASE CONSENT	MRIU DISC (P801B)	- - - - - - (SPARE)	1, 2, 3A, 7A, 8, 9	Run dedicated wire from MRIU Disc to 1760 ASI.
GND	STRUCTURE GND	WING DISC (J810)	PWR SUPPLY DISC (P1)	1, 2, 3A, 7A, 8, 9	Splice off Structure Ground in the Pylon.
MSL PRESENT	INTERLOCK	MRIU DISC (P801B)	MISSILE DISC (J815)	1, 2, 3A, 7A, 8, 9	Replace wire with Y-junction. Terminate single-sided end in the MRIU Disc (P801B) and the two sides of the Y in the Launcher / Missile disconnect (J815) and 1760 ASI.
GN / NEUT	POWER 1 RTN	WING DISC (J810)	PWR SUPPLY DISC (P1)	1, 2, 3A, 7A, 8, 9	Splice off GND / NEUT in the pylon.
GND / NEUT	POWER 2 RTN	WING DISC (J810)	PWR SUPPLY DISC (P1)	1, 2, 3A, 7A, 8, 9	Same as power 1 RTN.
GND / NEUT	115 VAC NEUT	WING DISC (J810)	PWR SUPPLY DISC (P1)	1, 2, 3A, 7A, 8, 9	Same as power 1 RTN.

TABLE 6.4 F-16 Compatible Signal at Centerline Station (Station 5)

F-16 SIGNAL	1760 SIGNAL	ORIGIN	DESTINATION	JUNCTION PROCEDURE
A-Bus	Mux A	Fuselage Disc J237	----	Run twisted shielded wire pair from Mux A Bus Stub to the fuselage disc (J237) to the 1760 ASI
B-Bus	Mux B	Fuselage Disc J236	----	Run twisted shielded wire pair from Mux B Bus Stub to the fuselage disc (J236) to the 1760 ASI
Option 7	Release Consent	RIU Disc P902	----	Run wire from RIU connector (P902) to 1760 ASI
Audio	Low Bandwidth	Fuselage Disc	----	Run line from Audio line in Fuselage Disc to 1760 ASI
Status 2	Interlock	RIU Disc P902	----	Run wire from RIU disc (P902) to ASI
Gnd	Interlock Return	Fuselage Disc J237	Store Disc J907	Splice off GND wire in the pylon. Status 2 excitation voltage is referenced to ground.
Gnd	Structure Gnd	Fuselage Disc J237	Store Disc J907	Splice off Structure Ground in the pylon
Gnd/Neutral	Power 1 Return	Fuselage Disc J236	Store Disc J907	Splice off from GN/NEUT wire in the pylon
Gnd	Power 2 Return	Fuselage Disc J237	Store Disc J907	Same as Power 1 Return
Neutral	115V AC Neutral	Fuselage Disc J235	Store Disc J907	Splice off neutral line in the pylon
Status 3	Aux Interlock	RIU Disc P902	Store Disc J907	Run wire from RIU disc (P902) to 1760 ASI
Gnd	Aux Interlock Return	Fuselage Disc J237	Store Disc J907	Same as Interlock Return
Gnd	Aux Structure Gnd	Fuselage Disc J237	Store Disc J907	Same as structure gnd

6.3.1.10 Modification #10: Physically locate the MIL-STD-1760 Primary and Auxiliary Connectors at Stations 3, 5 and 7 ASIs and the Primary Connector at All Other ASIs - This modification requires supplementing or replacing the existing ASI conneciors at each effected station. For simple stores, no modifications or supplemental umbilicals are necessary. Provisioning for implementation of 1760 must accommodate the additional signal and power requirements outlined in the previous modification descriptions, as well as several discretes from the RIUs serving each type of station. Also, the F-16's existing store control ability must not be degraded. The 1760 ASI connectors can use existing space if the present ASI umbilical is removed or rerouted. Since some of the RIU discretes must be available through the 1760 ASI, the existing interface must be used in any case. However, it would not terminate in its present location at the rear of the MAU-12 parent rack for stations 3, 4, 5, 6 and 7. Instead, it would terminate at or adjacent to the power control relay module added under other modifications. The required space can be found in the pin lanyard storage compartment of the wing station pylons, between the parent rack and the RIU in station 5, and next to the missile launcher power supply

for stations 1, 2, 8, and 9. The 1760 signal set would be available at this location as provided from the power control module, added analog lines, and the RIU's normal ASI. From here, a new umbilical would be routed down to the existing ASI's normal location for mating to 1760 stores. If no 1760 stores are to be carried, the new umbilical would be removed and the existing RIU interface used as it is presently. Figure 6.23 illustrates the reconfiguration described above for the wing pylons. A similar layout and cable routing scheme is envisioned for the centerline pylon, but the auxiliary power control relays would be separately located from the primary power relays. The auxiliary power relay can be placed in the forward portion of the gear well or the pin lanyard compartment. The primary power control relay module can be placed between the RIU and parent rack.

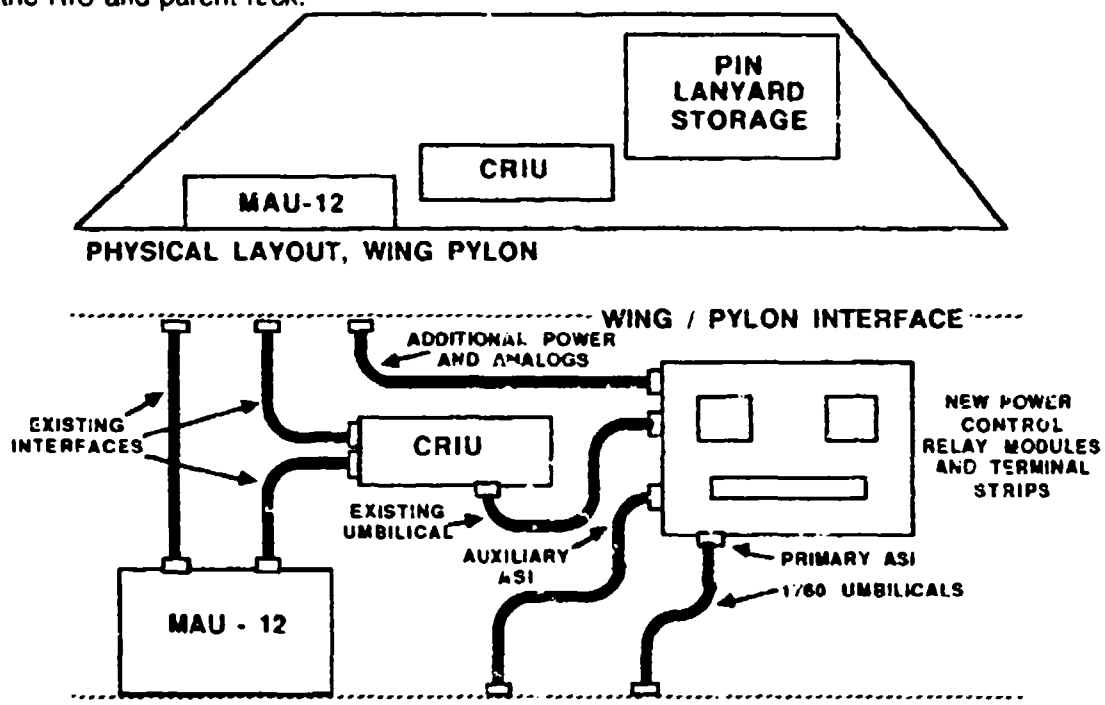

FIGURE 6.23 Proposed Routing and Interface Locations, Wing Pylon

The present missile launcher is not considered a candidate for this modification. Rather, the Modular Rail Launcher (MRL) is used as a baseline item. Since this rail already has a 1760-style ASI for the AMRAAM, the only requirement is to locate the power control module and connect the 1553 lines, analog lines, and RIU discretes to a new 1760 standard umbilical in lieu of the AMRAAM connector. There is space for the power control relays and necessary terminal strips next to the MRL power supply or in place of the nitrogen receiver assembly (USAF versions of the AIM-9L do not require this assembly). The latter is preferred, since it offers more space. The advantage of this design is that is uses existing space without impacting the structural integrity of the pylons and launchers. The pin lanyard compartment is adjacent to the wing/pylon interface and existing cables, providing easy access to the existing umbilicals, additional power, and analog network. Another advantage is that it is the least costly of the alternatives considered. The disadvantage of this design is that it requires rerouting the existing ASI umbilical and removing or adding the 1760 umbilical when store carriage changes from an existing store to a 1760 store. Of course, the original use of the pin lanyard compartment is lost, and new procedures must be adopted when weapon safety pins are removed before flight. Finally, although space for the new power control relays in the storage compartment is adequate, the space for rerouting umbilicals is marginal. In fact, the centerline pylon will require additional wiring for connectivity with the auxiliary power control relays to their location.

6.3.1.11 Modification #11: Provide the Additional ACIU Hardware and Software to Control MIL-STD-1760 Stores and to Implement the Changes in the Operational Flight Program Required by the Suggested Modifications - Paragraph 6.2.4 defines the requirements for modification of the SMS in order to implement MIL-STD-1760. The system design previously indicated affects the ACIU in a number of ways. Firstly, the new units and the MIL-STD-1760 discretes that the remote units now control, place an additional processing load on the ACIU. Secondly, the new MIL-STD-1760 stores place an additional software requirement on the ACIU. Thirdly, the requirements for interoperability implicit in MIL-STD-1760A and draft notice 1 LDD place an additional processing and software requirement on the ACIU. Lastly, the requirements of the LDD force changes to be made to the MIL-STD-1553 bus controller in the ACIU. This is because to produce an ACIU that is capable of handling 1760 stores in generic manner it must be capable of generating and checking the LDD sumcheck. The timing constraints, in relation to the generation of LDD sumchecks and system time are such that these functions must be performed in hardware. The only place for incorporation of this hardware is the ACIU bus controller. If only restricted sub-sets of stores are used, i.e. those stores that do not use the features above, then the ACIU BCU may not require modification.

6.3.1.11.1 Scope of Modifications - The modifications considered are only those required to meet the system design (see paragraph 6.3), MIL-STD-1760A and LDD Notice 1. The modifications made to the ACIU assume that system interoperability for future MIL-STD-1760 stores is of prime importance. To this end the software modifications are extended to provide for system reconfiguration as dictated by the store description message.

6.3.1.11.1.1 Limitations - The design modifications consider the ACIU as it was specified in August 1985, any changes made after this date have not been considered. The recommended changes are the minimum that are required, consistent with the correct operation.

6.3.1.11.2 Requirements Summary - The previous paragraph 6.3.1 defines the system changes that are required of the complete SMS. Figure 6.24 shows the current ACIU hardware design and figure 6.8 shows the current software design. The requirement is to modify the ACIU in as few ways as possible, whilst allowing it to control the new hardware and to enable the stores management system to manage the new MIL-STD-1760 stores in their defined loadout configurations. The following issues relate directly to the required modifications of the ACIU. These issues have necessitated changes to the ACIU to ensure that the SMS fully implements MIL-STD-1760 and hence increases the level of interoperability of the system. The issues are:

a. The control and timing of Release Consent when controlled over a dual standard serial data bus - The specification requires that Release Consent is present at the ASI for 20 msec prior to safety-critical data transfer. The use of remote switching units means that the total data transfer and signal activation time must be taken into account. Release Consent must be enabled as late as is possible in the release cycle to ensure safety. This is especially important when dual standards are used on the ASI digital data bus. However, to ensure that the store is released successfully, the signal must be present at the ASI 20 msec prior to the transmission of safety-critical commands. To ensure that the above requirement is satisfied the command setting of Release Consent must be initiated by the ACIU at least 100 msec prior to the transmission of the Fire/Launch safety-critical message. This is because, the remote units are still to be controlled over the existing dual-simplex bus. The 100msec period is required to allow the ACIU to command Release Consent on, wait for the signal to be activated by the remote unit, and to monitor correct operation, prior to a safety critical command.

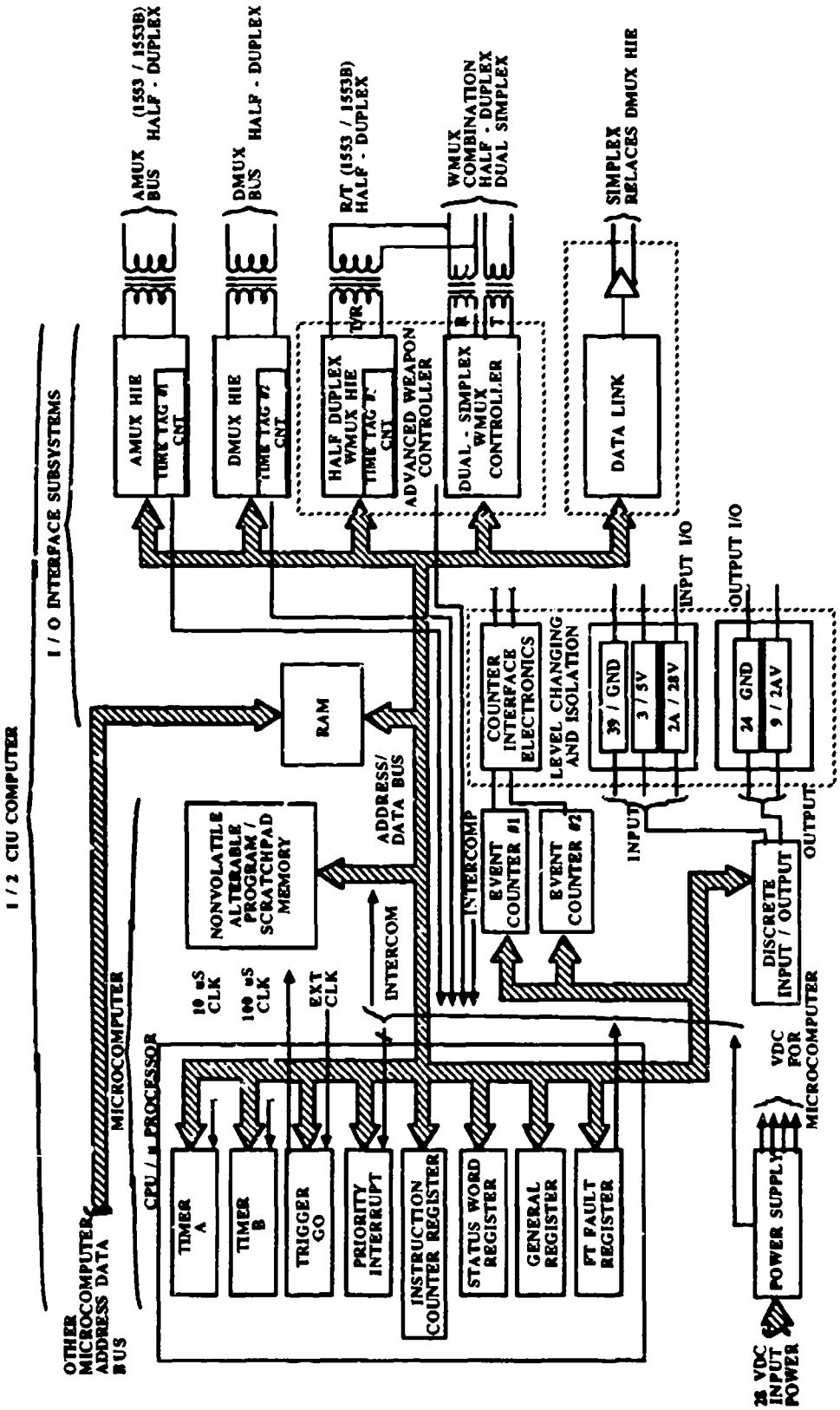

FIGURE 6.24 Current ACIU Hardware Design

b. Control of Safety-Critical functions - Two methods are provided within MIL-STD-1760A for the aircraft to provide a safety interlock. They are Release Consent and 28 volts DC power 2. To allow any Stores Management System to function in a fully interoperable manner the store functions must be described (in some manner) to the SMS by the store. The preferred method of interlock for stores is via the use of Release Consent. However, to satisfy the requirements of MIL-STD-1760A it is necessary that the ACIU provide both release consent and 28 volts 2.

c. 1553 Redundancy as appropriate to the 1760 LDD - In the current ACIU design, MIL-STD-1553 redundancy is achieved by providing a completely 'shared and split' architecture with ACIU, ie. Bus A (BC) and Bus B BC are separate and redundant. Bus controller A can control both buses, but BC B only controls bus B. What action does BC A take upon finding that it cannot communicate on bus B? The fault could be itself, in which case changing the BCs will return Bus B (but there will be no Bus A communication). Alternatively, the fault could be the bus itself - in which case changing BCs will result in no communication at all. The provision of partial redundancy is not in keeping with LDD or MIL-STD-1553. A fault which causes ACIU half switching means utilizing BC B, which is only capable of communicating on Bus B even though there is no fault with Bus A. This situation will require modification to ensure that full future interoperability is provided.

d. Store description messages - The notice 1 LDD provides a requirement that stores contain a number of description pages that define the stores operational and control requirements. This information allows the SMS to function in a completely interoperable manner; that is, the SMS requires no inventory configuration prior to the upload of store description messages. The ACIU software will require modification to take account of this.

e. ACIU Bus Controller is required to support a 750-microsecond intermessage gap - The ACIU BC will require modification to ensure that this requirement can be met.

f. LDD message checksum - The ACIU W-bus does not currently support the generation of LDD checksum. No software solution exists, therefore, the hardware will require modification.

g. Aircraft system time usage - Stores that require system time will need to be well synchronized (less than 2 msec error) with aircraft time. To ensure that this is possible hardware mechanisms should be used for time synchronization. The AEIS bus controller must maintain a synchronized version of system time so that the system time entity can be loaded into the appropriate messages at the point of transmission. To ensure this is possible, hardware mechanisms must be used for the LDD sumcheck word. This will allow messages containing system time to be transmitted with the minimum of time error. Synchronization at these levels of accuracy is generally not possible with software. System time is required to be transmitted to those stores that require it. It must be accurate to better than 2msec. To achieve this level of accuracy the BCU will have to place the current system time in the message at the point of transmission and (for those stores that require it) include the LDD sumcheck. It is not possible to perform this mechanism in software alone.

6.3.1.11.2.1 Processor

a. Current Performance The current fit of main processor in each redundant portion of the ACIU is compatible with the MIL-STD-1750 Instruction Set Architecture. It executes instructions at 120K instructions per second (ips), when measured using the Discrete Avionics Instruction Set (DAIS) benchmark.

b. MIL-STD-1760 Required Performance Conventional SMS processing environments do not require very large processing power capabilities. This is because only a relatively small part of the large SMS software set is running at any time, due to the event driven nature of SMSs. This is combined with the fact only one store type is normally controlled at any one time, although systems managing multiple types of MIL-STD-1760 stores may be required to control two types simultaneously. Close study shows the worst case situation is during the prerelease phase of missile control, when targeting of the missile is required using digital serial links between the controlling system and the missile. Each missile to be simultaneously targeted by the ACIU increases the processing load by an amount approximately in proportion to the data unique to each additional store (This is because certain data will be common to all stores and will not require individual processing on a per-store basis). An influential factor in the estimate of required processing power is the format of data received from the Avionics Bus. This factor results from the fact that data gathering and reformatting of the required data is a major component of processor load. As an example of the likely requirements of the ACIU performance when controlling MIL-STD-1760 stores, it is representative to take the case of AIM-120 (AMRAAM). This store significantly loads the processor during the pre-launch phase, and involves data transfer to the store using MIL-STD-1553 serial links. While this store does not strictly operate to the MIL-STD-1760 LDD, the number and frequency of data transfers will be of the same order as LDD compatible stores. Experience shows that the AIM-120 processing loads are 0.25 MIPS for one AIM-120 during targeting and 0.38 MIPS for two AIM-120s during targeting. These numbers assume a 50 KHz update rate, target code produced from a non optimizing Ada compiler, and significant data derivation and conversion. These figures make no allowance for any other processing activity during targeting. It would be prudent to allow 0.05 Mips for other data gathering and conversion, and a further 0.05 Mips for support and housekeeping activities. It is important to note that the single AIM-120 figure of 0.25 Mips is beyond the capability of the current processor according to received data. This implies that either the data is erroneous or that a lower update rate is being used or that highly optimized assembler code is being used with little data conversion. It should also be noted that if Ada were to be chosen as the HOL, the processing power requirement is higher in development environment than the delivered one. This is due to the use in development of run time features; (for example, constraint checking) which may be omitted in the final version of the operational flight program. These figures suggest a requirement exceeding 0.35 Mips (single targeting) or 0.48 Mips (twin targeting). Anticipating a future expansion requirement of 50%, a processor capable of around 0.75 Mips is desirable.

c. Possible Implementations - The standard options towards increasing the processor power of an existing unit are:

(1) Add extra processors of identical design to the existing processor (Five additional ones are required in the case of the ACIU)

(2) Add an extra processor of different design to make-up the processing shortfall

(3) Completely replace the existing processor by a new design

Options a) and b) comprise multi-processor solutions, and knowledge of the motherboard design may prohibit these solutions. This is because there may not exist either the physical locations for extra modules, or the necessary motherboard control signals for multi-processor applications. The most viable option is that of redesigning the processor module to provide the required processing power. Ideally, this would retain MIL-STD-1750 compatibility in order to preserve the existing software suite.

6.3.1.11.2.2 Memory

a. Current Capacity - The ACIU is currently comprised of 16K RAM and 48K PROM per redundant portion of the LRU (with some overlap between halves in the RAM area).

b. MIL-STD-1760 Required Performance - Assuming that the conventional stores continue to be controlled by the existing software suite, and that MIL-STD-1760 stores will be controlled by Ada packages, experience from the AVS demonstration rig would indicate a requirement breakdown as follows:

(1) Application Packages -

Initialization	1500 lines of Ada
Event Processing	1300 lines of Ada
Cold/Warm Restart	1000 lines of Ada
Store State Management	7000 lines of Ada
Jettison Management	1000 lines of Ada
Test/Reversion modes	800 lines of Ada
	12600 Total

(2) SMS Services -

Event Identification	300 lines of Ada
Safety-Critical Monitor	1000 lines of Ada
Power Control/Monitor	500 lines of Ada
W-MUX Interfacing/Monitor	2000 lines of Ada
RIU Control/Monitor	800 lines of Ada
Error Retry/Identification	500 lines of Ada
IBIT Control/CBIT	1000 lines of Ada
Network Setup/Monitor	800 lines of Ada
	6900 Total

This gives a total of 19,500 lines of Ada code. Converting to bytes, at 10 bytes per line, a figure of 195 K bytes of storage is required for code (that is 195K bytes PROM). Data storage requirements are estimated at 20K bytes for LDD data entities, and a further 40 K bytes each for the Ada "stack" and "heap," resulting in 100 K bytes of RAM. Applying 50% future expansion capacity, memory requirements are PROM - 300 K bytes and RAM - 150 K bytes. The ACIU clearly requires a memory expansion.

c. Possible Implementations - Memory technology has progressed significantly in recent years. Unless the ACIU has sufficient spare physical capacity to accommodate repeat memory modules (unknown, but unlikely), a redesign would be indicated. The required memory densities are now available on a single module when utilizing hybrid memory components and surface mounting techniques. At this time, the entire PROM requirement may be exceeded by utilizing three (3) 1 M bit EPROM devices. Alternatively, EEPROM devices should be considered for their on-board reprogramming capability. It is also likely that the processor and memory redesigns should be considered jointly, since memory "paging" techniques may then be avoided.

6.3.1.11.2.3 W-MUX - Modifications to the W-MUX Bus Control module may be unnecessary. The key points which will resolve this issue are driven by the LDD and are given below:

a. Inter-message gap performance - The LDD requires that the bus controller to the 1760 stores (in this implementation, the ACIU) is able to support a 750 micro second inter-message gap time. ACIU performance in this area is unknown, and indeed may change from its current value when a higher performance central processor unit is installed (depending on actual ACIU bus controller design).

b. Mode Codes - The LDD mandates certain mode codes to be supported by the W-MUX bus controller. It is unlikely that the ACIU will be unable to support these, but neither is it possible to state that it does possess the required capability.

c. Checksums - The LDD requires that the final word of any message is a checksum word relating to that message. This requires that the ACIU W-MUX bus controller either evaluate the checksum in software prior to message transmission (adding to the processing load and potentially the inter-message gap), or add a hardware checksum generating/receiving mechanism to the bus controller. The second option may be prohibited by space/layout considerations, but would represent the preferred solution from a performance viewpoint.

6.3.1.11.2.4 Discretes - The ACIU in the proposed recommended implementation is required to control the auxiliary 28V DC supplies via discrete control of power relays. Details available to the case study design team relating to the input/output modules within the ACIU are insufficient to determine if sufficient spare capacity exists, and thus avoiding ACIU modification.

6.4 IMPLEMENTATION SUMMARY Implementation of the suggested modifications requires the efforts summarized below. These implement the requirements defined in paragraph 6.3.

a. Implementing a new HBW 50 ohm (RF) switching network.

b. Adding an additional remote terminal to the W-MUX Bus and connecting it to the RF switching network with 43 discrete lines and to the Video Switching Network with 28 discrete lines.

c. Adding a 40 cubic inch switching unit in all the pylons and launchers to control the switching of the primary power.

d. Adding a 44.3 cubic inch switching unit in the pylons at stations 3 and 7 and in the aircraft near station 5 to control auxiliary AC power. Three additional wires for power and one additional discrete line will also have to be installed between the aircraft and the pylon.

e. Implementing auxiliary 28 VDC. Current indications are that both the required relays and wiring changes should be located in the equipment bays aft of the cockpit.

f. Running eight additional RF lines from the RF Switching Matrix to the station disconnects.

g. Running three video lines from the Video Switch to the three interior air-to-ground stations (one video line per station) and extending the video lines from the provisionary connectors to a 1760 ASI at the air-to-air stations.

h. Adding three additional relays to the Video Switch to accommodate the three new video lines mentioned above.

i. Performing a number of wiring changes in the pylons and launchers in order to provide currently available signals to the 1760 ASI.

j. Extending the W-MUX Bus out of the W-MUX station matrices to the 1760 ASI at the air-to-air stations.

k. Placing higher rated circuit breakers in the DC power feed lines to the Stores Standby Power System.

l. Implementing logical changes to accommodate all modifications.

m. Increasing the ACIU processor power and memory capacity.

6.4.1 Implementation of Specific 1760 Functions Overall implementation of a desired MIL-STD-1760 capability in the F-16 C/D impacts the following general areas: HBW signals, power, discrete signals, and the SMS logic. The following paragraphs summarize how the implementation baseline would address the impact in each area.

a. HBW Signals - A separate 50-ohm HBW network could be implemented in the aft equipment bay. It would control the switching of all HB1 and HB2 signals. HB3 and HB4 would be switched by the existing video network. Three additional switching elements could be added to the video switches to accommodate the three new video lines. Switching in both HBW switching networks (50 ohm - RF, 75 ohm - Video) would be in response to discretes generated by a remote terminal on the W-MUX Bus. This remote terminal could be located in the aft equipment bay. Control words would be communicated from the ACIU to the new remote terminal over the W-MUX Bus in dual-simplex protocol. An address of 11100 would be assigned to this terminal. This address is currently reserved as a spare in the W-MUX dual-simplex address field.

b. Power - Switching units distributed in the pylons and in the launchers could control primary AC and DC power at each station. One implementation of such a switching unit consists of five electromechanical relays of the same type. Relays are currently available in industry which provide the required switching capacity at the parameters specified by MIL-STD-1760. The typical size for such a relay is 1.718 inches (length) x 0.525 inches (width) x 1.125 inches (height). Taking into consideration proper thermal drain constraints, a box of size 5.3 inches (length) x 3 inches (width) x 2.5 inches (height) should accommodate these relays along with accompanying wiring. A 20-pin connector (16 for power and control grounds, 4 spares) located on top of the box would provide connectivity to the other elements of the stores power distribution network. Auxiliary AC power could be controlled at the store stations using a single switching unit located at each of the three ECM certified stations (3, 5, and 7). This switching unit could be implemented using a single three-pole single-throw (TPST) electromechanical relay. The size of such a relay is approximately 3.72 inches (length) x 3.303 inches (width) x 2.4 inches (height). A box 4.5 inches (length) x 4.1 inches (width) x 3.2 inches (height) designed with the proper thermal considerations could house the relay. A 10-pin connector (7 for power and control grounds, 3 spares) would provide connectivity to the other elements of the store power distribution network. The exact source of auxiliary DC power was undetermined due to the lack of information concerning F-16 power distribution. However, it is reasonable to assume that the source would be located at the aircraft power distribution level. Furthermore, it can be assumed that to extend these three DC sources to stations 3, 5, and 7 would require running a dedicated wire from power sources, located most likely in equipment bays aft of the cockpit, to each of the stations. Therefore, the relays controlling the auxiliary 28 VDC power lines could be implemented in the aircraft during installation of the wiring. Control of the relays would most likely be provided via discretes from the ACIU discrete I/O board.
Space to accommodate the 5.3 inches x 3 inches x 2.5 inches primary power switching unit is available in both the wing and centerline pylons, and the air-to-air missile launchers. The pin storage compartment of the wing pylon represents available space of the approximate dimensions

12 inches x 5 inches x 6 inches. This space can easily accommodate both the primary power switching unit and the 4.5 inches x 4.1 inches x 3.2 inches auxiliary AC power switching unit. A 6 inches x 5 inches x 6 inches space located between the RIU and pylon bomb rack could be used to house the primary switching unit and associated wiring in the centerline pylon. However, the auxiliary AC switching unit for the centerline station will have to be located in the aircraft due to a lack of available space in the pylon. An area near the power supply in the launchers could be used to accommodate the primary power switching unit at the air-to-air stations.

c. Discretes - The discretes to the 1760 interface could be generated by the station RIU or provided from discrete lines currently being routed to the conventional connector. A slight modification to the data selection portions of the RIU must be accomplished before STATUS 2 and 3 could be used for Interlock and Auxiliary Interlock, respectively. Threshold values and excitation current levels must be adjusted to 1760 values when the RIU is interfacing to 1760 stores. The 1760 addresses could be generated by mating the proper address lines to the address return line at the 1760 ASI. This mating could be accomplished by running the wires for the address lines in the 1760 ASI to a tag strip located in an LRU in the pylon. The RIU and primary power switching unit are both candidate LRUs for this task.

d. Logical - While defining the changes required to be made in the ACIU to implement the requirements of MIL-STD-1760, it has become evident that a great deal of data relating to the existing design is required. The information must cover the existing system performance requirements, hardware and software design definitions. Insufficient data was available on the first two of these aspects to allow a detailed definition of the design changes to be made. Nevertheless, a considerable amount of data was made available. The lesson to be learned is that very specific data is required (all of which may not be published), in order to define the changes that are required to an existing SMS processor (such as the ACIU) to enable it to support all the requirements of MIL-STD-1760, as the result of an improvement program. However, this design activity has determined those functional elements of the ACIU which would need to be upgraded, should a full implementation of MIL-STD-1760 be required. The principal changes that need to be made are associated with the usage of the MIL-STD-1553B data bus for MIL-STD-1760, the implementation of the LDD message sumchecks and, most significantly, the implementation of the LDD. These requirements impose a significant increase in processing power and memory capacity for the ACIU processors. Increases by factors of six (6) and ten (10), respectively, would be needed to comply with these requirements. A detailed implementation design approach is not practicable at this stage without more information relating to the existing ACIU hardware.

6.5 CASE STUDY SUMMARY The F-16 C/D Case Study has shown that for aircraft in general, the primary aircraft system affected by MIL-STD-1760 is the Stores Management System. In addition to impacting the interface at the physical ASI locations, 1760 also affects SMS endpoints within the aircraft which are connected to the ASIs. These endpoints issues include: indirect requirements due to concurrent operation of multiple ASIS, message and protocol requirements on the 1760 data bus applied to the SMS bus, and characteristics of sinks and sources within the aircraft which interface with the ASI.

6.5.1 Power System Depending on the specific definition of SMS boundaries, 1760 could also affect the aircraft power generation and distribution system. At the overall aircraft system level, the electrical load of the power generation/conversion system is impacted by the total load of all ASIs operating simultaneously. To this extent, 1760 defines the maximum load at each ASI. MIL-STD-1760 does not, however, require that the aircraft be capable of simultaneously operating all ASIs at maximum rating. The interoperability goals of 1760 can be simplistically defined as permitting installation of any store at any station on any aircraft. The ability of any store type to be operated simultaneously at all stations of an aircraft does not necessarily apply,

even though this capability could be desirable. A second power system impact could deal with power quality issues. Because MIL-STD-704 has D as the current issue, any invitation to bid or request for proposal against MIL-STD-1760A installation may cause MIL-STD-1760 to impose requirements on power characteristics at the ASI which are not directly compatible with present aircraft power systems. This does not, however, mean that the entire aircraft power system must comply with the 1760 power requirements.

6.5.2 Avionics System Interfaces The final aircraft system area details with "avionics" system interfaces. MIL-STD-1760 may standardize particular signal interfaces which are related to specific subsystems. This standardization does not, however, imply that the aircraft must contain such subsystems. For example, 1760 may define a high bandwidth transfer media compatible with GPS L_1 signal bands. This signal definition does not, however, mandate that the host aircraft contain a GPS receiver. The host aircraft should, however, contain the transfer media routed to some "convenient" point in the aircraft. Likewise, 1760 may define a message format for transferring terrain map data to a store, but this definition does not imply that all aircraft carry or process digital terrain maps. In general, it is not the intent of 1760 to control or influence the basic mission capability; (that is, role) of an aircraft weapon system, but to standardize those interfaces when they exist. This general 1760 limitation is even more true for mission stores. Most of the standardized interfaces defined for the MSI in 1760 will not be used by any specific mission stores (This does not, however, exclude use of a common connector). Where a mission store requires a specific interface signal, the characteristics must comply with 1760. Since a carriage store may be inserted between interoperable aircraft and mission stores, and since the carriage store may be produced by a third party, tighter controls of 1760 interfaces are projected for the carriage stores. MIL-STD-1760 incorporate some provisions to allow the carriage store protocol to be added later by restricting the message length for Mission Stores to 30 words. The two remaining words are effectively reserved for use within the protocol for the routing of data directly through a carriage store. The 1760 interface on the aircraft or a mission store extends a limited distance into the aircraft or mission store. Beyond this limited boundary, the interface has no control. In contrast, the interface extends into a carriage store from two directions - from the CSI and from the CSSI. In addition, the carriage store should be functionally transparent to a mission store; that is, a mission store should operate the same whether singly carried or multiply carried. MIL-STD-1760 should define all commands, protocols, topologies and electrical characteristics necessary for achieving this transparency. MIL-STD-1760 essentially forms the electrical specification for the store.

6.5.3 Ground Support Equipment The final area of 1760 impact is on Ground Support Equipment (GSE). Specific GSE items will be necessary for testing the various weapon system segments at each 1760 interface. MIL-STD-1760 will impact these GSE items by defining the interface between the GSE and the applicable 1760 connection point. Depending on the specific GSE function, other non-1760 interfaces may also be required for accomplishing the ground tests or maintenance actions. MIL-STD-1760 will not, however, address specific GSE to aircraft, GSE to carriage store, or GSE to mission store functional requirements. While it might be desirable to develop a standard set of GSE for use on all aircraft and stores, the testing procedures and fault location algorithms will vary between different aircraft and between aircraft stores. For this reason, 1760 does not address these GSE requirements. For example, it is not the standard ASI that is tested on an aircraft, but a specific SMS implementation of 1760. If a failure is evident at the ASI, the GSE must peer into the SMS through the ASI, and probably through other aircraft interfaces, to determine the cause of the failure. Likewise, the location of a failed component within a carriage store could require different procedures and algorithms for different carriage stores.

6.5.4 Summary In summary, 1760 should standardize only those interface issues necessary for achieving interoperability between aircraft and stores. The impact of 1760 on the weapon systems should be, therefore, limited to those areas necessary for interoperability. During development of new 1760 systems, a fine line will exist between defining some 1760 requirements (which enhance interoperability) and infringing on the specification domain of various subsystems. Most "requirements" which specify design implementation details could overstep the authority of 1760 and, more importantly, are not necessary to ensure interoperability. The biggest problem in defining the proper domain or boundaries of the 1760 requirements occurs in determining how "deep" into an interface segment (that is, aircraft) that requirements must be defined. A good example of this borderline area is the perceived need for deadfacing interface circuits. The deadfacing issue deals with the termination of interface circuits after release of a store. Deadfacing, in this context, is not an interoperability issue. It may be desirable to deadface some circuits to minimize the possibility of damage or to limit pick-up of EMI on the unterminated circuits. These factors affect performance of the SMS (for the aircraft interface segment) or the store electronics (for the store interface segment). The SMS and store side of the interfaces should be designed such that these factors do not impact operation of the remaining active interfaces, or impact the interoperability of these interfaces.

SECTION 7

DESCRIPTION OF APPENDIX A AND APPENDIX B

7.1 Appendix A - Issues and Guidance The purpose of this appendix is to provide practical guidance for implementors of MIL-STD-1760 in future aircraft and stores. The guidance is provided by identifying many generic issues associated with implementing the standard within the aircraft avionics environment.

7.2 Appendix B - Rationale for Appendix A This appendix has been prepared to provide the rationale for sections 7-13 of Appendix A. The rationale is therefore available, should it be required, without complicating the ISSUE/GUIDANCE format of Appendix A.

MIL-STD-1760 APPLICATION GUIDELINES

APPENDIX A

Issues and Guidance

CONTENTS

Paragraph	Title	Page
1.	INTRODUCTION	107
1.1	Purpose	107
1.2	Scope	107
1.3	Limitations	107
1.4	Appendix Structure	107
2.	REFERENCED DOCUMENTS	109
2.1	Government Documents	109
2.1.1	Military Standards	109
2.1.2	Military Specifications	109
2.1.3	Handbooks	109
2.1.4	NATO Standardization Agreement	109
2.1.5	Other Documents	109
2.2	Contractor Documents	110
2.3	MIL-STD-1760	110
3.	DEFINITION OF TERMS	111
3.1	Definition and use of terms	111
3.2	Definition of acronyms	111
4.	PURPOSE, GOALS AND PROJECTED BENEFITS OF MIL-STD-1760	116
4.1	Current lack of Interoperability	116
4.2	Purpose and Goals of MIL-STD-1760	116
4.3	Benefits of MIL-STD-1760 (General)	117
4.4	The Benefits of the MIL-STD-1760 Logical Design Definition (LDD)	117
4.5	Extra Bus Usage Imposed by the LDD	117
4.6	Projected Benefits of MIL-STD-1760	118
4.6.1	Operational Benefits	118
4.6.2	Physical Benefits	118
4.6.3	System Benefits	119
4.6.4	Equipment Benefits	119
4.6.5	Software Benefits	119
4.7	Proposed MIL-STD-1760 Control Board	119
5.	OVERVIEW OF MIL-STD-1760A	120
5.1	Introduction to MIL-STD-1760A	120
5.1.1	Interfaces	120

CONTENTS - continued

Paragraph	Title	Page
5.1.2	Elements of the Interface	120
5.1.3	Classes	120
5.2	Summary of signal sets	120
5.2.1	Primary Interface Signal Set	123
5.2.2	Auxiliary Power Signal Set	124
5.3	MIL-STD-1760A Connectors Types	124
5.3.1	Interface Usage	124
5.3.2	Connector Inserts	125
5.3.3	Connector Contacts	125
5.4	Summary of the Logical Design Definition (LDD)	125
5.4.1	Notice 1	125
5.4.2	Notice 2	125
5.4.3	Notice 3	125
5.4.4	Logical Design Definition Discussion	125
6.	THE MIL-STD-1760 APPLICATION PROCESS	132
6.1	Definition of the MIL-STD-1760A Application Process	132
6.2	Summaries of Issues and Guidelines in Sections 7 Thru 13	132
6.3	CROSS REFERENCE	134
7.	AIS SYSTEM DEFINITION ISSUES AND GUIDELINES	135
7.1	Overall AIS Definition	135
7.1.1	AIS Definition	135
7.1.2	Implementation/Procurement Strategy	136
7.1.3	Partial MIL-STD-1760 Implementation	136
7.1.4	Impact of Integrated Avionics	136
7.2	Program Objectives	138
7.2.1	Cost Factors	138
7.2.2	Timescale Factors	139
7.2.3	Define Aircraft Performance Requirements	140
7.3	Overall Weapon System Functional Partitioning	140
7.3.1	The AIS and the Stores Management System (SMS) function	140
7.3.2	Summary of Functional Partitioning	141
7.4	Weapon System Partitioning Guidance	143
7.4.1	Store Interface	143
7.4.2	Store State	143
7.4.3	Data to Store	144
7.4.4	Data from Store	144
7.4.5	Store Selection	145
7.4.6	Store Arming	145
7.4.7	Store Release	146
7.4.8	Store Jettison	148
7.4.9	Inventory	148
7.4.10	Crew Interface	149

CONTENTS - continued

Paragraph	Title	Page
7.4.11	Nuclear Control	149
7.5	Future Growth Potential	150
7.6	Summary	150
8.	AIS SYSTEM PERFORMANCE ISSUES AND GUIDELINES	151
8.1	Approach to AIS Performance Definition	151
8.2	AIS Functional Performance	151
8.2.1	Store Interface Performance	151
8.2.2	Store State	154
8.2.3	Data To Store	157
8.2.4	Data from Store	161
8.2.5	Store Selection	163
8.2.6	Store Arming/Fuzing	165
8.2.7	Store Release	166
8.2.8	Store Jettison	170
8.2.9	Inventory	171
8.2.10	Crew Interface	172
8.2.11	Nuclear Control	173
8.3	AIS General Performance	175
8.3.1	Expansion Provision	175
8.3.2	Reliability	175
8.3.3	Maintainability	176
8.3.4	Volume/Mass	177
8.3.5	Environmental Requirements	177
8.3.6	Miscellaneous	178
8.4	Interfaces	178
8.4.1	Power Supplies	179
8.4.2	Digital Interfaces	179
8.4.3	Discrete Interfaces	180
8.4.4	Analog Interfaces	180
8.4.5	Connectors	180
9.	SYSTEM DESIGN ISSUES AND GUIDANCE	181
9.1	Overview of the System Design Process	181
9.2	AIS Functional Partitioning	181
9.2.1	Partitioning Viewpoints	181
9.2.2	Partitioning of External Functions	182
9.2.3	Partitioning of Internal Functions	188
9.3	AIS Internal Interfaces	189
9.3.1	Connectors and Cabling	190
9.3.2	Power Interfaces	190
9.3.3	Digital Interfaces	191
9.3.4	Discrete Interfaces	191
9.3.5	Analog Signals	192

CONTENTS - continued

Paragraph	Title	Page
9.4	System Design Documentation	192
9.4.1	Type A - System Specification	192
9.4.2	Type B1 - Prime Item Development Specification	192
9.4.3	Type B2 - Critical Item Specification	193
9.4.4	Type B3 - Non-Complex Item Development Specification	194
9.4.5	Type B5 - Computer Program Development Specification	194
9.4.6	Type C1b -Prime Item Product Fabrication Specification	194
9.4.7	Type C2 - Critical Item Product Function Specification	194
9.4.8	Type C3 - Non Complex Item Product Fabrication Specification	194
9.4.9	Type C5 - Computer Program Product Specifications	194
9.5	An Example System	194
9.5.1	Bulk Memory	195
9.5.2	Process Control Equipments (PCE)	195
9.5.3	Critical Controls	195
9.5.4	Store Station Equipment (SSE)	197
9.5.5	High Speed Data Bus	197
9.5.6	Armament Network	198
10.	HARDWARE DESIGN ISSUES AND GUIDANCE	199
10.1	MIL-STD-1760A Implementation Guidance	199
10.1.1	High Bandwidth Issues	199
10.1.2	MIL-STD-1553 Issues	203
10.1.3	Low Bandwidth Issues	209
10.1.4	Discrete Signal Issues	210
10.1.5	Power Issues	213
10.1.6	Auxiliary Signal Set Issues	216
10.1.7	Connector Issues	217
10.1.8	Reserved Provisions Issues	218
10.2	Detailed Guidance on Specific Issues	219
10.2.1	Safety Critical Switching	219
10.2.2	Safety Critical data transfer	220
10.2.3	Use of Standard Modules	221
10.2.4	Built in Test Circuitry	222
10.2.5	Connectors	222
10.2.6	Connector Pin Allocations	222
10.2.7	Physical Design of Equipment	224
10.2.8	Electromagnetic Considerations (EMC, EMP, TEMPEST)	224
11.	SOFTWARE GUIDANCE	225
11.1	MIL-STD-1760 LDD IMPLEMENTATION	225
11.1.1	Overall LDD Impacts	225
11.1.2	Power Up Sequence	226
11.1.3	Subaddress Allocation	229
11.1.4	Data Check Algorithm	230

CONTENTS - continued

Paragraph	Title	Page
11.1.5	Store Identification	231
11.1.6	Safety Critical Control/Monitor	233
11.1.7	MIL-STD-1553 Option Restrictions	237
11.1.8	Basic Protocol	238
11.1.9	Coordinate Systems	246
11.1.10	Entity Definitions	247
11.1.11	Data Formats	249
11.1.12	Base Message Formats	249
11.1.13	Mass Data Transfer	250
11.2	General Software Issues	250
11.2.1	Language Selection	250
11.2.2	The use of MIL-STD-1815A Ada HOL	251
11.2.3	Instruction Set Architectures	256
11.2.4	Processing Requirements	257
11.2.5	Software Architectures	259
11.2.6	Reuseable Software	260
11.2.7	Software Interfaces	260
11.2.8	Program Support Environment	260
11.2.9	Software Configuration Control	262
11.3	Benefits of the LDD to AIS Software	262
12.	AIS INSTALLATION ISSUES AND GUIDELINES	263
12.1	Connectors	263
12.2	Multiplex Data Bus Cable	263
12.3	High Bandwidth Cable	263
12.4	Release Consent and Interlock Cables	264
12.5	Address Line Cable	264
12.6	Power Cable	264
13.	AIS SYSTEM INTEGRATION, TESTING AND IN-SERVICE SUPPORT	265
13.1	Integration	265
13.1.1	Connectors	265
13.1.2	Currently Installed Wiring	265
13.1.3	Electronic Hardware	268
13.1.4	Avionic Interface	270
13.2	Testing	271
13.2.1	System Design Verification	271
13.2.2	Aircraft Build Standard Verification	272
13.2.3	Service Testing	272
13.3	Phased MIL-STD-1760 Implementation	272

CONTENTS - continued

Paragraph	Title	Page
14.	INDEX	273
14.1	Content	273
14.1.1	Index A	273
14.2.2	Index	273

CONTENTS - continued

Figure	Title	Page
1.1	Appendix A structure	108
5.1	Overview of MIL-STD-1760A	121
5.2	MIL-STD-1760 Signal Set	122
6.1	AIS Implementation Phases	133
7.1	Non-exclusivity of the AIS	135
7.2	Integrated Avionics Concepts	137
7.3	Weapon system function partitioning	141
8.1	AIS Analog Network Requirements For N ASI	161
9.1	Functional Partitioning	182
9.2	Typical System Reliability Breakdown	187
9.3	AIS and MIL-STD-490	193
9.4	Example Form of AIS	196
10.1	Centralized and Distributed High Bandwidth Networks	200
10.2	Typical High Bandwidth Switching paths	202
10.3	Local and aircraft MIL-STD-1553 buses	203
10.4	Single and Multiple Stores Buses	204
10.5	Separate and shared MIL-STD-1553 buses	205
10.6	Linear Bus	206
10.7	Starred Bus	206
10.8	Typical MIL-STD-1553 Bus Controller	208
10.9	Methods of isolating open circuit stubs	208
10.10	Release Consent Switching Circuit	211
10.11	Typical Interlock Circuit	212
10.12	Location of RT Address	213
10.13	Centralized or Distributed Power Switching	214
10.14	Location of Power Fault Isolation Elements	214
10.15	28V DC Power 2 Control	216
10.16	Cable Clamping on Primary Connector	218
10.17	Safety Critical Switch	220
10.18	Safety Critical Data Transfer	221
10.19	BIT Circuits	223
10.20	Use of Guard Pins	224
11.1	Software Changes for New Store (Generic Software Structure)	227
11.2	Software Changes for New Store (Non-Generic Software Structure)	228
11.3	Power Up Timings	229
11.4	Power Up Flowchart for one Store	230
11.5	Notice 1 Subaddress Processing	232
11.6	Data Structure	232
11.7	Separated Safety Critical Processing	235

CONTENTS - continued

Figure	Title	Page
11.8	Service Request Protocol	239
11.9	Checksum Error Recovery (RX messages)	240
11.10	General Retry Scheme	246
11.11	Comparative Processing Powers (DAIS mix) with co-processors	257
11.12	Effects on IPS requirements of different software design strategies	258
11.13	A Layered Software Architecture	261

Table	Title	Page
4.1	Example of Aircraft, Stores, and Store Missions	116
6.1	Relationship between Paragraphs and Application Process Phases	134
6.2	Applicability of guidance source to implementation example	134
7.1	Table of Cost of Ownership Factors	139
7.2	Weapon system functions	141
8.1	Store Loadout Configurations (From Type A System Specification)	153
8.2	MIL-STD-1760 STATE DEMANDS	156
11.1	Mode Code Usages by AIS	238
11.2	Data Bus Errors and Remedies	245
14.1	Index A	273
14.2	Index B	278

1. INTRODUCTION

1.1 Purpose The purpose of this Appendix is to provide practical guidance for implementors of MIL-STD-1760 in future aircraft applications. This document identifies and explains those issues which are associated with implementing the standard within the aircraft avionic environment. Although each particular implementation of the standard will require aspects that may be unique to the application, there are many issues which are generic to most. The issues considered in this document have been derived from specific implementation examples, but are presented in such a way as to have general application. For each of the issues presented, recommended guidance (based on experience) is given for its practical implementation in a system environment. This document will assist in the process of ensuring that a coordinated approach to the application of MIL-STD-1760 by the Air Force, Army, and Navy is achieved.

1.2 Scope The information contained in this document is intended to provide the implementor of the Aircraft/Store Electrical Interconnection System (AEIS), defined by MIL-STD-1760, with the following:

a. An understanding of the purpose and projected benefits of the standard
b. An understanding of the standard itself, including the electrical signal set, physical connector characteristics, and logical design definition
c. An understanding of the MIL-STD-1760 Application Process
d. A comprehensive list of implementation issues, or problems to be resolved, during the application process
e. Application guidelines for each implementation issue, which may contain specific recommendations

This document is intended to be available for use by all Government Agencies, industrial organizations and procurement, design, installation and support organizations.

1.3 Limitations Aspects of aircraft/store integration not considered in this document are aircraft and store mechanical compatibility issues, including aerodynamic loads and clearances. The definition of MIL-STD-1760 is as defined in paragraph 2.3. Subsequent issues and notices of the standard are not considered.

1.4 Appendix Structure The overall structure and paragraph definitions of the document are shown in figure 1.1. Sections 7 through 13 comprise the main body of the document, and include groups of issues and associated application guidelines. It is anticipated that the reader of this document will normally wish to use it as a reference document by seeking application guidance on a specific issue or issues. Issues may be referenced by one of two routes via the index in section 14: a MIL-STD-1760 paragraph number or a specific issue title.

1. Scope
   - Purpose, Scope and Structure of this Appendix

2. Referenced Documents

3. Definition of Terms

4. Purpose, Goals and Projected Benefits of MIL-STD-1760
   - NATO Interoperability
   - System, Hardware, Software and Operational Benefits

5. Description of MIL-STD-1760
   - Summary Description of - Signal Set
     - Physical Connector
     - Logical Design Definition (LDD)

6. The MIL-STD-1760 Implementation Process
   - Description of the Process
   - Implementation Phases

7. to 13. AIS Implementation Issues and Guidelines
   - System Definition
   - System Performance
   - System Design
   - Equipment Design
   - Software Design
   - Installation
   - Integration, Testing, Support

14. Indexes
   - Cross Referencing Tables - Issues & Guidance MIL-STD-1760 / and vice-versa.

FIGURE 1.1 Appendix A structure

2. REFERENCED DOCUMENTS

2.1 Government Documents Unless otherwise specified in paragraph 2.3, the following specifications, standards, and handbooks, form a part of this document to the extent specified herein.

2.1.1 Military Standards

MIL-STD-454	Standard General Requirements for Electronic Equipment
MIL-STD-461	Electromagnetic Interference Characteristics Requirements for Equipment
MIL-STD-462	Electromagnetic Interference Characteristics, Measurement of
MIL-STD-704D	Aircraft Electrical Power Characteristics
MIL-STD-882A	Safety Program for System and Subsystem and Equipment, Requirements for
MIL-STD-1553B	Aircraft Internal Time Division Command Response Multiplex Data Bus
MIL-STD-1760	Aircraft/Store Electrical Interconnection System
MIL-STD-1815A	Ada Programming Language
DOD-STD-2167	Defense System Software Development

2.1.2 Military Specifications

MIL-E-5400	General Equipment Environment
MIL-C-38999	Connector, Electrical, Circular, Miniature, High Density, Quick Disconnect (Bayonet, Threaded, and Breech Coupling), Environment Resistant, Removable Crimp and Hermetic Solder Contacts, General Specification for

2.1.3 Handbooks

MIL-HDBK-244	Aircraft-Store Integration

2.1.4 NATO Standardization Agreement

STANAG 3350 AVS	Monochrome Video Standard for Aircraft System Applications

2.1.5 Other Documents

DRAFT MIL-STD-1760A (April 1985)	Aircraft/Store Electrical Interconnection System (Draft for Comment)
DRAFT Notice 1 to MIL-STD-1760A (June 1985)	Logical Requirements

2.2 Contractor Documents

CDRL: COOK Type A System Specification (for an AEIS Implementation System) July 1983 (Reference CDC 181-02-01)

CDRL: COOL Generic SMS System Design B1 Specification (Reference CDC 181-04-02)

182-51-02 AIM-9L Parameters
182-60-05 PCE B2 Specifications (CDC)
182-60-06 SSE B2 Specifications (CDC)
182-60-07 SNE B2 Specifications (CDC)
182-60-08 APS B2 Specifications (CDC)
182-60-09 CSE B2 Specifications (CDC)
182-60-10 DC B2 Specifications (CDC)
182-60-11 MFD B2 Specifications (CDC)
182-60-12 SU B2 Specifications (CDC)
182-60-21 Aircraft Wiring (CDC)
182-70-07 MIL-STD-1760 Evaluation Plan (CDC)
182-70-06 AVS Evaluation Plan
182-70-13 LDD Evaluation Plan (CDC)
182-60-12 PCE B2 Specifications (CDC)
182-60-22 MIL-STD-1760 Impact of Changes

2.3 MIL-STD-1760 For the purposes of this document, MIL-STD-1760 shall be defined as April 1985 draft MIL-STD-1760A, as amended by June 1985 DRAFT Notice 1 as limited by document 182-60-22. References to the above Notice 1 as compared with Notices 2 (Oct 86) and 3 (Jan 87), have been included where it is felt that this would be useful. However, it was beyond the scope of this effort to provide more than minimal coverage.

3. DEFINITION OF TERMS

3.1 Definition and use of terms Terms used within this document are as defined in the referenced documents, MIL-HDBK-244, and the NATO Glossary of Terms and Definitions for Military Use, and as listed in Section 3 of the Report.

3.2 Definition of acronyms The following acronyms used in these Application Guidelines are defined as follows:

A, Amp	Ampere
A^2I^2	Aircraft Armament Interoperable Interface
AAM	Air-to-Air Missile
AAO	Air-to-Air Override
AC, ac	Alternating Current
A/C	Aircraft
ADC	Air Data Computer
AEIS	Aircraft/Store Electrical Interconnection System
AFB	Air Force Base
AFR	Air Force Regulation
AGM	Air-to-Ground Missile
AHRS	Attitude and Heading Reference System
AIM	Air Intercept Missile
AIS	AEIS Implementation System
ALCM	Air Launched Cruise Missile
ALWT	Advanced Light Weight Torpedo
AM	Amplitude Modulation
AMAC	Aircraft Monitor and Control
AMRAAM	Advanced Medium Range Air-to-Air Missile
ARM	Anti-Radiation Missile
ASCU	Avionics Simulator and Control Unit
ASALM	Advanced Strategic Air Launched Missile
ASAT	Anti-Satellite
ASDI	Alternate Serial Digital Interface
ASI	Aircraft Station Interface
ASPJ	Advanced Self-Protection Jammer
ASW	Anti-Submarine Warfare
AVS	AEIS Validation System
A/W	Aircraft Wiring
BC	Bus Controller
Bit	Binary Digit
BIT	Built-in-Test
BITE	Built-in-Test Equipment
BPS	Bits Per Second
BSGT	Boresight
BW	Bandwidth
CBU	Cluster Bomb Unit
CDR	Critical Data Review
CJ	Combat Jettison
CRT	Cathode Ray Tube
CSI	Carriage Store Interface
CSSI	Carriage Store Station Interface

DAS	Defensive Aids System
DC	Direct Current
ECM	Electronic Countermeasures
EED	Electro-Explosive Device
EJ	Emergency Jettison
EM	Electromagnetic
EMC	Electromagnetic Compatibility
EMI	Electromagnetic Interference
EMP	Electromagnetic Pulse
ERU	Electro-explosive Release Unit
ESE	Existing Store Equipment
ESI	Existing Store Interface
FCC	Fire Control Computer
FCS	Flight Control System
FDD	Fault Detection Diagnostics
FDM	Frequency Division Multiplexing
FLIR	Forward Looking Infra-red
FM	Frequency Modulation
FOV	Field of View
g	Gravity
GND	Ground
GPS	Global Positioning System
GHz	Giga Hertz
GSE	Ground Support Equipment
HBW, HB	High Bandwidth
HF	High Frequency
HOL	High-Order Language
HSDB	High Speed Data Bus
HUD	Head-up Display
HVM	Hyper Velocity Missile
Hz	Hertz
IBU	Interference Blanking Unit
I BIT	Interruptive BIT
ID	Identification
IFF	Identification, Friend or Foe
IIR	Imaging Infra-Red
INE	Inertial Navigation Equipment
INS	Inertial Navigation System
IOC	Initial Operating Capability
ISA	Instruction Set Architecture
I/O	Input/Output
I/P	Input
IFOL	In Flight Operable Lock
ICD	Interface Control Document
IR	Infra-red
IRLS	Infra-red Line Scan
JTA	Joint Test Assembly

JTIDS	Joint Tactical Information Distribution System
kg	kilograms
kHz	kilo-hertz
LAD	Low Altitude Dispenser
LANTIRN	Low Altitude Navigation and Targeting Infra-red for Night
LAT, lat	Latitude
LB	Low Bandwidth
LDD	Logical Design Definition
LLTV	Low Light Television
LONG, long	Longitude
LOS	Line of Sight
LRSOM	Long Range Stand Off Missile
LRU	Line Replaceable Unit
LSP	Least Significant Part
m	Meter
m	milli (prefix factor equal to 10^{-3})
max	Maximum
MAS	Master Armament Switch
MCW	Maneuvering Cluster Weapon
MER	Multiple Ejector Rack
MFCD	Multi-Function Controls and Displays
MICOS	Multifunctional Infrared Coherent Optical System
MIL-STD	Military Standard
min	Minimum or Minute
Mips	Million Instructions per Second
MRASM	Medium Range Air-to-Surface Missile
MSER	Multiple Store Ejector Rack
MSOW	Modular Stand Off Weapon
MSP	Most Significant Part
MSI	Mission Store Interface
MTBD	Mean Time Between Defects
MTBF	Mean Time Between Failures
MTTR	Mean Time to Repair
MTTT	Mean Time To Test
MUX	Multiplex
NA	Not Applicable
NFV	Narrow Field of View
No.	Number
NSSI	Non-Standard Store Interface
NWC	Naval Weapons Center
O/B	Outboard
PAL	Permissive Action Link
PCB	Printed Circuit Board
PCE	Process Control Equipment
PDU	Power Distribution Unit
p-p	Peak-to-Peak
Ph	Phase

PSJ	Pilots Selective Jettison
QA	Quality Assurance
RF	Radio Frequency
REF	Reference
RET	Return
RIU	Remote Interface Unit
RFI	Radio Frequency Interference
RPV	Remotely Piloted Vehicle
RS	Radiated Susceptibility
RT	Remote Terminal
RTN	Return
S	Second(s)
SAIR	Safe and In-Range
SAM	Surface-to-Air Missile
S&RE	Suspension and Release Equipment
SEAM	SRAAM/Sidewinder Expanded Acquisition Mode
sec	Second
SEL	Select, Selected
SEM	Standard Electronic Module
SEMP	Standard Electronic Module Program
SJ	Selective Jettison
SMS	Stores Management System
SNR	Signal to Noise Ratio
SOW	Statement of Work
SPJP	Self-Protection Jammer Pod
SRAM	Short Range Attack Missile
SRU	Shop Replaceable Unit
SSI	Standard Store Interface
TBD	To Be Determined
TCM	TERCOM
TCP	Time Correlation Pulse
TCS	TACAN
TER	Triple Ejection Rack
TFR	Terrain Following Radar
TGT	Target
TOW	Tube Launched Optically Tracked Wire Guided
TRIG	TRIGGER
TV	Television
TXR(S)	Transformer(s)
u	micro (prefix factor equal to 10^{-6})
UHF	Ultra High-Frequency
USAF	United States Air Force
UV	Ultra-Violet
UW	Under Water
V	Volts
VA	Volt Amps
VAC	Volts Alternating Current

VCW	Verify Control Word
VEL	Velocity
VDC	Volts Direct Current
VHF	Very High Frequency
VTR	Video Tape Recorder
WASP	Wide Area Special Projectiles
WCS	Weapon Control System
WFV	Wide Field-of-View
WRIS	Weapon Release Inventory Switch
WRT	With Respect To

4. PURPOSE, GOALS AND PROJECTED BENEFITS OF MIL-STD-1760

Paragraphs 4.1 through 4.6 discuss the purpose, goals, and projected benefits of MIL-STD-1760 while 4.7 discusses future control of the standard to maintain its credibility.

4.1 Current lack of Interoperability Within NATO countries, other than the US, aircraft are purchased to support specific missions, for example fighter or ground attack, and furthermore they tend only to purchase one type of aircraft for each mission. Also, unfortunately, in order to "keep an independent capability," many NATO countries also have different types of aircraft between them to support the same basic missions. In both the US and NATO, stores are developed largely independent of each other, even though the requirements may be very similar, and within NATO, mainly due to the earlier discussion, they quite often support only one type of aircraft. This quite absurd situation has resulted in unique aircraft/store electrical interconnection requirements and a consequent proliferation of interface designs. Table 4.1 gives some examples of this. This lack of standardization has led to low levels of interoperability which can have a detrimental impact on force effectiveness. Technology advances have led to a quantum jump in the requirements of effectiveness (in both capability and flexibility) of mission stores and have also meant that the age old requirements to stand-off from the target is now a practical proposition. This is now being reflected into the use of increasing amounts of avionic data and control information from aircraft systems and this, if allowed to proceed without a common interface standard, for example MIL-STD-1553B is required by MIL-STD-1760, will inevitably lead to insurmountable technical and or funding problems.

Table 4.1 Example of Aircraft, Stores, and Store Missions

Aircraft	Store	Store Mission
F4 M	Sparrow	MRAAM (Radar)
TORNADO ADV	Sky Flash	MRAAM (Radar)
ORION	Harpoon	Anti-Ship Missile
SEA HARRIER	Sea Eagle	Anti-Ship Missile
TORNADO FRG	Kormoran	Anti-Ship Missile
USAF	AIM-9J/P	SRAAM
USN	AIM-9L/M	SRAAM
TORNADO UK	AIM-9L	SRAAM
TORNADO FRG	AIM-9L	SRAAM
USAF	LOCL POD	Area Denial
TORNADO UK	JP 233	Area Denial
TORNADO FRG	MW1	Area Denial

Note: France has an equivalent for each one of the stores listed above, for example anti-ship is Exocet, and these also have different interfaces.

4.2 Purpose and Goals of MIL-STD-1760 The application of this standard to new and existing aircraft and to new stores will significantly reduce and stabilize the number and variety of signals required at aircraft/store interfaces. This will minimize the cost impact of new stores on future stores management systems, and increase store interoperability among the services, within NATO and with our other allies. In practice, true interoperability will not be fully achieved, but a significant reduction in the support costs will accrue. It is important to understand that the goal of interoperability does not mean the standardization of all stores or aircraft systems per se. However, it should mean all NATO aircraft should be able to carry, and

employ, the NATO stores specific to that aircraft mission, as well as the national specific solution with minimal, or preferably no, modifications.

4.3 Benefits of MIL-STD-1760 (General) The perceived benefits are increased interoperability of aircraft stores and decreased aircraft-store integration time and cost. Some aircraft system designers argue, however, that the electrical integration costs are inconsequential when compared to the physical integration problem, and that the standard will not provide interoperability. The costs of physical integration are not pertinent to the MIL-STD-1760 issue. The fact remains that millions of dollars are wasted on unnecessarily complex electrical integration tasks. This problem may increase dramatically as the sophistication and electrical complexity of stores increase. MIL-STD-1760 alone will not provide electrical interoperability of various store types. If, however, interoperability is evaluated in terms of cost of integrating new stores, and, if the services make and stand by a decision that all new stores will be MIL-STD-1760 stores, then a quantitative measure of the benefits of the standard is available.

4.4 The Benefits of the MIL-STD-1760 Logical Design Definition (LDD) A workable logical definition for aircraft-to-store interfaces can dramatically facilitate the integration of new stores on an aircraft and enhance the interoperability of a single store on different aircraft. However, the LDD is widely believed to increase the store and aircraft processing requirements. In some quarters, this is seen as increasing software and processing requirements of both the store and the aircraft armament system. However, this is far from the case as the example of the integration of AIM-120 onto the F-16 illustrated, where this integration caused a change of the inertial co-ordinate definition used on the F-16 avionics. This has now become the de facto standard within MIL-STD-1760A Notice 3, which means that any future SSI store requiring this function must use the "standard" way and at least both F-15 and F-16, which are both AIM-120 integrated, will also be compatible. On the store side of the interface, the need to accommodate the 1553B word and message lengths has also been an issue, that is why not allow, say, 4 bits of x length transmitted as 1 word every y milliseconds or h length transmitted as 2 words every y milliseconds or x length transmitted as 4 "words" every I microseconds? The cost and time associated with integrating a new store on existing aircraft or fielding a new aircraft capable of interface with a wide variety of unique store interfaces outweighs any extra effort or costs involved with adherence to the standard. Bus transceivers, decoders, and memory elements are dropping in price at a dramatic pace. The same applies to the CPU and other processing elements residing within the store. Other than price, capability must be considered. The ultimate capability provided by implementing interfaces meeting the standard will certainly be higher and more easily achieved than is presently the case in the weapon community. Rarely has an increase in weapon capability been easily or cheaply attained. If adherence to the logical design requirements provides a store or aircraft with unused capability for future enhancements, then it appears a good investment. A final point to consider is that once a weapon system such as the F-16 is capable of meeting a sophisticated store's requirements (AIM-120A, for example), much of the software and control capability can be applied relatively cheaply to later weapons. The AIM-120A transfer alignment, targeting, and initialization schemes might easily be adapted for future weapons with similar requirements, rather than developing new and unique software modules for each new weapon. The MIL-STD-1760 Logical Design Definition should therefore be used as agreed to and published. If the interface requirements of the store are relatively insignificant compared to the capabilities provided by the standards bus and logical definition, advise the procuring agency of the cost disadvantage and seek guidance on using the Low Bandwidth alternate (currently under review) or accept the apparent cost disparity.

4.5 Extra Bus Usage Imposed by the LDD Adoption of MIL-STD-1760 and its logical design definition has generated concern regarding data bus usage. A general feeling exists that bus loading will increase, possibly to unacceptable levels, with strict adherence to the standard. The

basic protocols of MIL-STD-1553 tend to drive the overall bus usage, not the demands of the MIL-STD-1760 logical design definition. Secondly, aircraft stores management system architectures can have as great or greater impact upon bus usage than either MIL-STD-1553B or MIL-STD-1760 requirements. For example, an aircraft with station encoder-decoders (F-18), or remote interface units on the weapons bus (F-16), as well as stores, will generally use more of that bus's capacity than an aircraft with only stores and the bus controller (F-15C/D) on its armaments bus. In other words, given an identical store load, one aircraft will be using some of its bus capacity for communications above and beyond those required for the stores, and the other will not. A final point relates bus loading to mission phase. The greatest load on the bus occurs during the Store Description transfer between the store and central processor(s) or other stores. Typically, this occurs shortly after system or weapon initialization when time is not as critical as it is immediately prior to release/launch. Bus designs should therefore be implemented that reduce non-store addresses and take advantage of the standardized formats, messages, and data entities put forth by the standard.

4.6 Projected Benefits of MIL-STD-1760

4.6.1 Operational Benefits These benefits arise primarily from two sources: Interoperability and Damage Tolerance. As indicated earlier, operational effectiveness must be impaired by the inability to cross operate stores across specific aircraft within, say, the US Air Force or between the US Air Force and US Navy or between either and NATO, be the latter Air Force or Navy. In times of conflict, the provisioning of stores at strategic locations able to cope with the variations in requirements, air to air or air to ground or air to ship, must be a costly logistics nightmare and certainly beyond the scope of most NATO countries. It must therefore be of immense value to be able to design stores which physically (connectors and wiring) are interoperable. In terms of data availability and the appropriate software "control," it will probably be some years before interoperability can be achieved. However, there is no reason why aircraft could not carry the appropriate control algorithms on a permanent "just in case" basis, providing the appropriate data is available from the prime sensors. Furthermore, it may be possible to employ a store in a useful, but degraded mode, where other more effective alternatives are out of stock. The advent of digital communication between stores and aircraft also means that a lot more information can be made available regarding damage, be it battle or failure, enabling the aircraft to utilize degraded operation modes as applicable. It should also be possible for other aircraft equipments, either duplicated SMS hardware (even distributed processing within the SMS LRUs) or non SMS equipment to assume a processing role. Of course in the latter case access to the multiplex bus would be required and with the probable exclusion of Arming and Release functions. Many current stores have no means of indicating that all analog signals transmitted from the aircraft have indeed arrived. This means that no indication of capability or serviceability is available and furthermore, even if they did arrive, whether the store is utilizing them correctly. The advent of the multiplex data bus should alleviate this problem. Additionally, the fact that the Multiplex Data Bus is redundant should have significant benefit against cable faults, battle damage or otherwise and, providing duplication has been provisioned, bus controller failure, battle damage or otherwise.

4.6.2 Physical Benefits

a. Same connector(s) used for SSI stores
b. Same LRU hardware used for SSI stores
c. Same A/C wiring used for SSI stores
d. Connector at ASI can possibly be used for existing store control
e. No increase in aircraft wiring or LRU hardware increase affecting aircraft weight

(Note: the Increase in weight due to software update is not considered significant)

4.6.3 System Benefits

a. Generic system solutions

b. Generic system design for implementing MIL-STD-1760A
- clearly defined interfaces between SMS equipments
- simple SMS design provides high mission success via reconfigurable interfaces
- reduced aircraft/store integration effort

c. Reduced Integration Cost
- minimized systems modifications
- minimized documentation changes
- distributed processing enabled

d. Reduced Integration Time
- minimized systems modifications
- reduced software QA problems

e. Safety Maintained
- standard secure formats
- restrictions on interface formats

4.6.4 Equipment Benefits

a. Common hardware capability for AIS
- reuse of proven designs

b. Common AIS interface to Armament Bus and Stores gives reduced integration effort and cost
- ability to optimize hardware
- increased intervals between upgrades

4.6.5 Software Benefits

a. Transportable/Reuseable software due to MIL-STD-1760 Logical Design Definition
b. Better documentation and configuration control using high order languages
c. Reduced size of Software updates
d. Program code size
e. Reduces cost of successive Software validation exercises.
f. Performance improved
- reduced requirement for reformatting
- ability to implement some protocol in hardware thereby reducing software execution requirements

4.7 Proposed MIL-STD-1760 Control Board MIL-STD-1760 is relevant to all three US services and NATO. At present, however, the standard is being managed by the OPRs aided by the SAE. There is no recognized multi-service forum for resolving MIL-STD-1760 issues. This has resulted in significant delays in publication of the standard and can ultimately result in its being ignored by services or organizations within services. Several suggestions have been made for multi-service (plus NATO and DOE) MIL-STD-1760 Control Boards with industry participation as non-voting members. Any one of these suggestions would work. Two examples of standards with multi-service control boards are MIL-STD-1553 and MIL-STD-1750.

5. OVERVIEW OF MIL-STD-1760A

This section gives a short overview of MIL-STD-1760A up to and including Notice 3.

5.1 Introduction to MIL-STD-1760A MIL-STD-1760A is an Aircraft to Store electrical interconnection system designed to cover all the foreseeable (20+years) electrical and optical, requirements for stores and their carrying aircraft. It stems from the need to minimize the numbers of wires, with the consequent quantity and variety of connectors, and to digitize the current analog, not including RF and Video, signals that stores and aircraft require.

5.1.1 Interfaces Four interfaces are defined in the standard and are listed below. These interfaces are designed to cater for the carriage of a store on an aircraft with indirect or direct electrical connections, that is with or without a carriage store. The interfaces are shown fully, with a variety of typical configurations, in figure 5.1.

Aircraft Station Interface
Mission Store Interface
Carriage Store Interface
Carriage Store Station Interface

5.1.2 Elements of the Interface There are three hierarchical elements in the interface which are covered by the standard. The Electrical element concerns the signal set; the Logical concerns the communications architecture, message content and formatting, and data transfer protocol; and the Physical concerns the connectors and contacts.

5.1.2.1 Electrical The electrical element is limited by defining 41 contacts and the signals which they are allowed to support. These signals are distributed across two connectors, the Primary Interface Signal Set connector and the Auxiliary Power Signal Set connector. The signals that make up these sets are shown in figure 5.1.

5.1.2.2 Logical This element is chiefly concerned with the data flow across the Multiplex Data Bus interface. A breakdown of the prime areas of data flow is given in Paragraph 5.4.

5.1.2.3 Physical This element concerns the connectors. These are MIL-C-38999 Series III shells using specific inserts, designed to support MIL-STD-1760A, which are now included in MIL-STD-1560A. The contacts are standard MIL-C-39029 contacts including two 50 ohm co-axial contacts which have been specifically designed for co-axial cable applications (new Slash Sheets 102 and 103).

5.1.3 Classes During the development period it was found to be expeditious to allow two classes of primary interface to which the auxiliary could be added. This should enable a store specification to indicate which class is available, across its interoperable range of aircraft, for it to interface with.

5.2 Summary of signal sets There are two signal sets, namely the primary interface signal set and the auxiliary power signal set and these are shown in figure 5.2. Four classes of interfaces have been specified from these two signal sets:

Class I - Full primary interface signal set
Class IA - Class I plus the auxiliary power signal set
Class II - Class I minus HB2 and 4 and both the Fiber Optic and 270V DC provisions
Class IIA - Class II plus the auxiliary power signal set

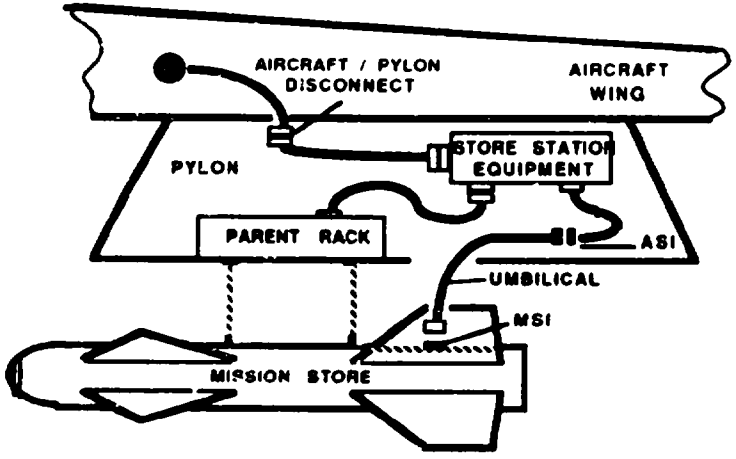

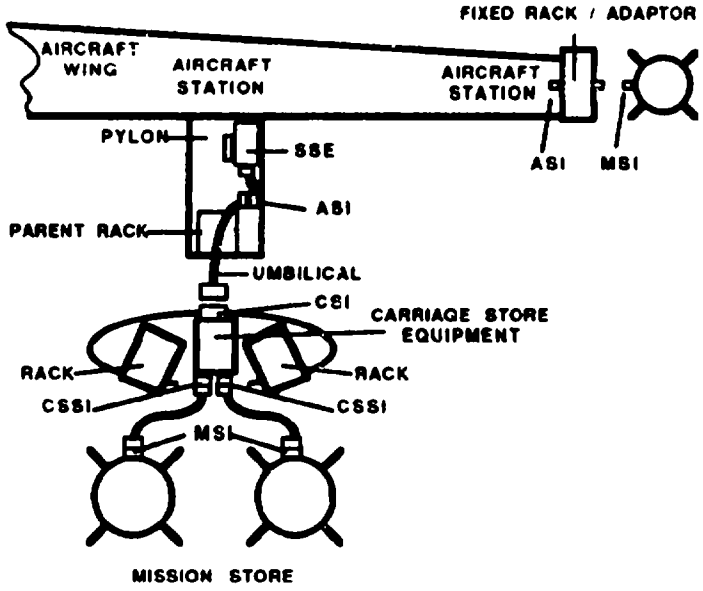

ASI - AIRCRAFT STATION INTERFACE
CSI - CARRIAGE STORE INTERFACE
CSSI - CARRIAGE STORE STATION INTERFACE
MSI - MISSION STORE INTERFACE

AIRCRAFT STATION INTERFACE (ASI) LOCATIONS

- PYLONS
- CONFORMAL CARRIAGE TRAY AND FUSELAGE HARD-POINTS
- INTERNAL WEAPON BAYS
- WING TIPS

MISSION STORES INCLUDE :

- MISSILES
- ROCKETS
- BOMBS
- NUCLEAR WEAPONS
- TORPEDOES
- BUOYS, FLARES, etc.
- PODS
- FUEL TANKS

PRIMARY INTERFACE SIGNAL SET

- HIGH BANDWIDTH. (4, RF & VIDEO)
- MUX BUS A & B (MIL-STD-1553)
- ADDRESS (5 BIT + PARITY)
- LOW BANDWIDTH
- FIBER OPTICS BUS A & B (PROVISION)
- RELEASE CONSENT
- INTERLOCK
- AIRCRAFT POWER: 28v DC 1 & 2
  115v 400 Hz 3 PHASE
  270v DC (PROVISION)
- STRUCTURE GROUND

AUXILIARY POWER SIGNAL SET

- INTERLOCK
- AUXILIARY POWER:
  28v DC 115v AC
  270v DC (PROVISION)
- STRUCTURE GROUND

FIGURE 5.1. Overview of MIL-STD-1760A

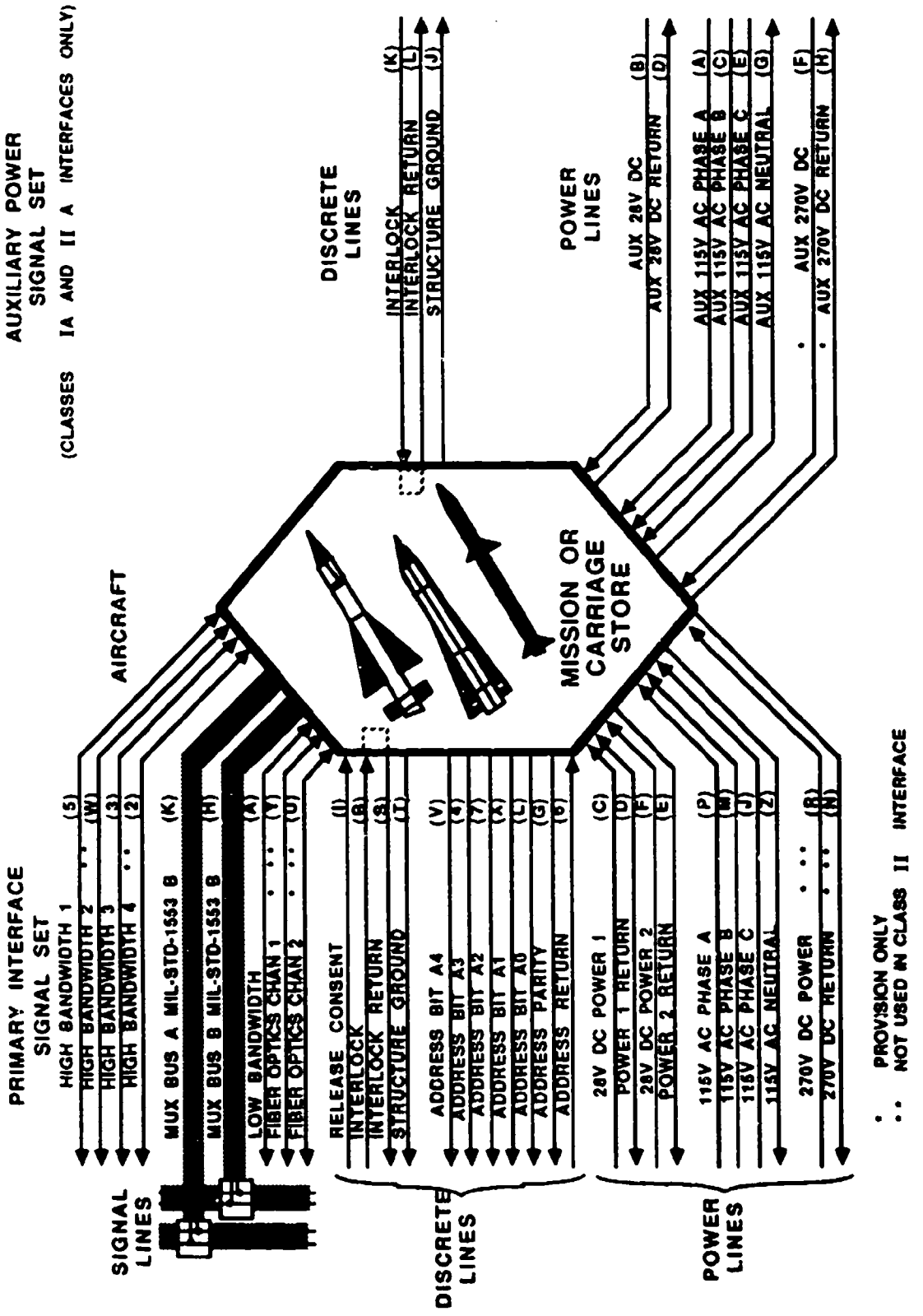

FIGURE 5.2 MIL-STD-1760 Signal Set

5.2.1 Primary Interface Signal Set The primary interface signal set is composed of interfaces for both high and low bandwidth signals, digital multiplex data bus signals, a specified number of dedicated "discrete" signals, current aircraft power and growth for Fiber Optics and 270V DC power. Each of these interfaces is discussed more fully below:

5.2.1.1 High Bandwidth Interfaces There are four interfaces for transferring two types of signals. The aircraft is responsible for controlling, assigning and routing the Type A and Type B signals to their proper destinations on the appropriate high bandwidth line. These lines (HB1,HB2,HB3 and HB4) have the capability to be interconnected, by the aircraft, for ASI to ASI and ASI to Aircraft bi-directional data transfers. A Summary of their chief characteristics is as follows:

a. Type A signals: 20 Hz to 20 MHz - Between ASI and Aircraft and between ASI and ASI
b. Type B signal: 20 MHz to 1.6 GHz - Between ASI and aircraft only
c. HB1: Type A or Type B @ 50 ohm impedance
   HB2: Type A @ 50 ohm impedance
   HB3 and HB4: Type A @ 75 ohm impedance
d. HB1 (Type B): RF
   HB1 (Type A) and HB2: time correlation signals
   HB3 and HB4: video
e. HB1 and HB2 return is grounded; HB3 and HB4 return is isolated

5.2.1.2 Low Bandwidth Interface This interface is capable of transferring low bandwidth (DC to 50 kHz) signals in both directions between the aircraft and stores. At this time it is used only for tones and voice grade audio signals. It is not to be used for discrete functions.

5.2.1.3 Digital Multiplex Data Interface Two channels (Mux A and Mux B) are provided for transferring digital information, such as store control and store status data, between aircraft and stores in a dual standby redundant mode. These signals comply with the requirements of MIL-STD-1553B.

5.2.1.4 Address Interface This interface is used to assign a unique MIL-STD-1553 remote terminal address to the connected store. It contains a set of six discretes (A0 to A4 plus parity) and one common address return.

5.2.1.5 Release Consent Interface This interface is a 28V (nominal) discrete used only to enable or disable safety critical store functions being commanded by the aircraft over the Digital Multiplex Data Interface (see 5.2.1.3).

5.2.1.6 Primary Interlock Interface A primary interlock interface is available for the aircraft to monitor the electrically mated status of the Primary Interface connector between store and aircraft.

5.2.1.7 Primary Structure Ground In order to minimize shock hazards to personnel, this connection is supplied between the aircraft and store structure. It is not used as a signal or normal power return path, but may be used as an emergency power return at 10 Amps.

5.2.1.8 Primary 28V DC Power The aircraft provides 28V DC 1 for use on nonsafety critical store circuits and 28V DC 2 for safety critical circuits. Both are rated at 10 Amperes continuous. In fact 28V DC 2 may be used for powering any circuitry, but because its prime use is for safety critical circuitry, the time for which it is likely to be available prior to store separation is very limited.

5.2.1.9 Primary 115V AC Power The aircraft provides one channel of 3 phase 115V AC rated at 10 Amperes continuous per phase. Store designs which do not utilize 28V DC 2 for powering safety critical circuits and therefore rely on voltages internally derived from the 115V AC, must design in appropriate safety interlocks of their own as it is totally impractical for the aircraft to supply any such safeguards with power availability.

5.2.1.10 Fiber Optic Interface The characteristics of these signals are not yet added to the standard and are not included in class II interfaces.

5.2.1.11 Primary 270V DC Power The characteristics of this signal is not yet added to the standard and is not included in class II interfaces.

5.2.2 Auxiliary Power Signal Set The auxiliary power signal set consists of an interlock discrete, structure ground and aircraft power.

5.2.2.1 Auxiliary Interlock Interface An auxiliary interlock interface is available for the aircraft to monitor the electrically mated status of the Auxiliary Interface connector between store and aircraft.

5.2.2.2 Auxiliary Structure Ground In order to minimize shock hazards to personnel this connection is supplied between the aircraft and store structure. It is not used as a signal or normal power return path, but may be used as an emergency power return at 30 Amps.

5.2.2.3 Auxiliary 28V DC Power The aircraft provides one channel of auxiliary 28V DC power rated at 30 Amperes continuous. It is intended for safety critical use and therefore has the same 'rules' as Primary 28V DC 2.

5.2.2.4 Auxiliary 115V AC Power The aircraft provides one channel of auxiliary 115V AC power rated at 30 Amperes continuous per phase. As for the Primary 115V AC power, no power availability safeguards will be provided by the aircraft.

5.2.2.5 Auxiliary 270V DC Power The characteristics of this signal is not yet added to the standard and is not included in Class IIA interfaces.

5.3 MIL-STD-1760A Connectors Types It is important to note that MIL-STD-1760A only specifies that the connectors being used must have intermateability with MIL-C-38999 design. This is to allow connectors to have modifications, say a backfitting thread increase, which do not affect intermateability. MIL-C-38999 connectors which can be used fall into three categories listed below. In all cases a shell size 25 is required. Furthermore, there is no difference in these requirements between primary or auxiliary connectors except for the insert arrangement.

Fixed sockets	-	38999 Slash Sheet 20 or 24
Free plug	-	38999 Slash Sheet 26
Snatch plug	-	38999 Slash Sheet 31 (lanyard release)

5.3.1 Interface Usage The three basic categories discussed above, have applicability as follows: Slash 20 or 24 (jam nut or flange mount) can be used at the ASI, CSI, CSSI and MSI; Slash 26 can be used at the "top" of the umbilical, that is it is the mating half for the ASI and CSSI. Providing the carriage store were not jettisonable, the Slash 26 may also be used, on a special umbilical, as the mating half for the CSI, that is the "top" and 'bottom'; Slash 31 can be used at the "bottom" of the umbilical, that is it is the mating half for the CSI and MSI. It should be noted that, at this time no connector requirements are specified for the MSI, or its mating half, used in Rail Launch applications.

5.3.2 Connector Inserts Two connector insert arrangements are specified to fit the shells discussed above. These inserts are for the Primary and Auxiliary applications and are defined in MIL-STD-1560, arrangements 25-20 and 25-11 respectively. No other insert arrangements are authorized.

5.3.3 Connector Contacts These contacts are those specified in MIL-C-39029 as listed in MIL-STD-1760A. At this time, MIL-STD-1760A requires amendment to add two contacts, a mating pair, to the Primary arrangement list. These contacts, Slash Sheet 102 and 103, are the pin and socket contacts, respectively, required for the High Bandwidth 1 and 2 applications. It has been necessary to develop new contacts which are specifically designed for 50 ohm co-axial cable, in order to meet the stringent VSWR requirements of the MIL-STD-1760A High Bandwidth 1 installation.

5.4 Summary of the Logical Design Definition (LDD) The LDD, as defined in paragraph 2.3, has, of January 1987, been issued with amendments as formal notices 1, 2 and 3 to MIL-STD-1760A. Their content is as follows:

5.4.1 Notice 1: (US Navy only)
Power Up Sequence
MIL-STD-1553 Subaddress allocation
Store Description message including weapon identification scheme and Data Checksum Algorithm (additional to MIL-STD-1553)

5.4.2 Notice 2: (Joint Service)
Content as Notice 1

5.4.3 Notice 3: (Joint Service)
MIL-STD-1553B Command and Status Word Requirements (includes further sub-address/mode field applications)
Protocol Execution
Mass Data Transfer
Safety Critical Message Requirements
Non-Safety Critical Message Requirements
Standard Data Entities (includes standard coordinate systems)

5.4.4 Logical Design Definition (LDD) Discussion The discussion that follows considers each prime part of the LDD and any major implications of the associated requirements are considered. Major differences between Draft Notice 1 dated 3 June 1985 and Notice 3 dated 30 January 1987 are noted.

5.4.4.1 MIL-STD-1553B Word Requirements

5.4.4.1.1 Command Word [B50.1.1] The command word requirements are basically those in MIL-STD-1553B. Certain field requirements are reinforced or mandated. Within the address field the broadcast option is limited to mode commands. Within the sub-address/mode field the following mode commands are mandated:

a.	Reset Remote Terminal	(stores only)
b.	Transmit Last Command	(stores only)
c.	Transmitter Shutdown	(stores only)
d.	Override Transmitter Shutdown	(stores only)
e.	Transmit Vector Word	(aircraft and stores)

f. Synchronize With Data (aircraft and stores)
g. Transmit Status (stores only)

Further to this the following mode commands are prohibited: Dynamic Bus Control and Reserved Mode Codes. All other mode commands are permitted with the provision that implementation of a permitted mode code by the aircraft or store does not require the store or aircraft to reciprocate. Note that certain permitted mode commands are required to be paired. Within the sub-address/mode field the following sub-addresses have been allocated:

a. Routing Control/Monitor - 03
b. Routed Data - 05
c. Store Description - 06
d. Nuclear Weapon - 07
e. Test - 08
f. Mission Store Control/Monitor - 11
g. Linked Messages - 14

5.4.4.1.1.1 Notice 3 [B40.1.1] There are no prime mode code differences. Sub-address allocation differences are as follows:

a. Routing Control/Monitor - Eliminated
b. Routed Data - Eliminated
c. Store Description - 01
d. Nuclear Weapon - 19 and 27
e. Mass Data Transfer (Linked Messages) - 14

5.4.4.1.2 Status Word [B50.1.2] The status word requirements are basically those in MIL-STD-1553B. The implementation of the Service Request, Busy, Sub-system Flag, and Terminal Flag bits are regulated by MIL-STD-1760A.

5.4.4.1.2.1 Notice 3 [B40.1.2] There are prime differences between the implementation of the following two bits: Service Request and Sub-system Flag.

5.4.4.2 Protocol Execution

5.4.4.2.1 Protocol Checks [B50.1.5.1] Protocol checks are listed below. The store is required to conduct protocol checks on all receive messages that can initiate safety critical actions and must do so within the allowed busy time. All other checking is optional, but must still be carried out within the busy time, if implemented.

Verification of Sub-address
Verification of Checksum (if implemented)
Verification of Header
Verification of Critical Authority and Control

5.4.4.2.1.1 Notice 3 [B40.1.5.1] The requirement for verification of sub-address has been removed as has the requirement to carry out the remaining checks within the busy time. A "protocol check" failure reporting mechanism has been included.

5.4.4.2.2 Checksum Requirement [B50.1.5.2] A checksum algorithm (Rotated Modulo 2) is specified in the standard. This is the only algorithm which may be used and its use is optional and determined by the store. When implemented, it is positioned in the last word of the message and when not implemented the last word has the value of 0000 HEXADECIMAL.

5.4.4.2.2.1 Notice 3 [B40.1.5.2] The algorithm is unchanged. However, its use is now mandated on all three standard messages. When implemented, under the option rule, it is still positioned as the last word, but when not implemented this last word is a data entity.

5.4.4.2.3 Execution Time [B50.1.5.3] Indication to the aircraft of the execution of the protocol checks is provided by the setting of the busy bit. The maximum time for which busy may be set is 1500 microseconds and provision is made for the store to report its actual maximum busy time. Other busy bit implementations, including time maximums, are included in this paragraph.

5.4.4.2.3.1 Notice 3 [B40.1.5.3.] Basically, indication is no longer given to the aircraft because the busy bit maximum time has been restricted to 50 microseconds. There are certain other busy bit implementation changes also, mainly to bring MIL-STD-1760A and MIL-STD-1553B Notice 2 into line with each other.

5.4.4.2.4 Message Acknowledgment [B50.1.5.4] Stores acknowledge receipt of a message if the status word response is generated with: Message Error bit set to logic O, Service Request bit set to logic O, Busy bit set to logic O, and Service Request bit set to logic O in the subsequent status word, providing the Busy bit is also set to logic O.

5.4.4.2.4.1 Notice 3 This requirement has been eliminated.

5.4.4.2.5 Service Requirement Notification [B50.1.5.5] Service request notification uses the service request bit in the Status word. Multiple requests, that is more than one request condition active, are allowed and the implementation is specified.

5.4.4.2.5.1 Notice 3 [B40.1.5.4] Obviously the service request bit is still in use, but multiple requests are handled in a totally different implementation.

5.4.4.2.6 Request Servicing [B50.1.5.6] The aircraft extracts the servicing required information by demanding the Vector Word. It must do this on a high priority basis and acknowledge receipt. The vector word content is defined.

5.4.4.2.6.1 Notice 3 [B40.1.5.5/6/7] The aircraft still extracts the servicing required data by use of the vector word. However, the priority requirement has been eliminated as has the receipt acknowledgment. The vector word content has been completely redefined and also included are the rules for retention of both the vector word and any associated sub-address contents. Both the LDD and Notice 3 use a figure to show the general form of a service request protocol and it is important to note that these now have totally different protocols.

5.4.4.2.7 Request Acknowledgment [B50.1.5.7] A protocol for vector word receipt is fully defined including the responses when multiple requests are being serviced.

5.4.4.2.7.1 Notice 3 These requirements have been eliminated.

5.4.4.2.8 Fault Notification [B50.1.5.8] This paragraph provides the rules for use of the service request bit in the status word.

5.4.4.2.8.1 Notice 3 This paragraph has been eliminated by folding the requirements into B40.1.2.3.

5.4.4.2.9 Data Consistency [B50.1.5.9] The data consistency requirements are spelled out here and this includes a protocol for the recipient of the consistency state.

5.4.4.2.9.1 Notice 3 This requirement has been eliminated.

5.4.4.3 Linked Transfers [B50.1.5.10] The linked transfer requirements are undefined, but sub-address 14 is reserved for this purpose.

5.4.4.3 1 Notice 3 [B40.1.5.8] This requirement is now called Mass Data Transfer and the sub-address 14 reservation is now in use for its intended purpose. A full protocol is specified for bi-directional data transfer called out as Download Mode (aircraft to store) and Upload Mode (Store to Aircraft). Allowance has been made for transfer of up to 255 files each containing up to 255 records where a record is up to 255 blocks of 29 words, that is 29 X 255 X 255 X 255 or 1,885,725 data words per file. Three basic types of messages are used:

a. Transfer Control (TC) - The aircraft uses this message to control the mass data transfer protocol.
b. Transfer Monitor (TM) - The store uses this message to advise the aircraft of transfer status.
c. Transfer Data (TD) - This is used by either aircraft or store for the actual data transfer.

5.4.4.4 Carriage Store Routing [B50.1.5.11] The procedure is undefined. However, sub-addresses 03 and 05 are reserved for this purpose and the MIL-STD-1760A message length is established as 30 (thirty) words to allow introduction of this facility at a later date.

5.4.4.4.1 Notice 3 [B40.1.5.9] The procedure is still undefined and the reservation of sub-addresses 03 and 05 has been canceled. All messages are still restricted to 30 (thirty) data words, although Carriage Store Routing is no longer specified as the reason.

5.4.4.5 Message Requirements [B50.2] The requirements for both standard and non-standard data messages are fully defined, with the former restricted to those for Critical Control, Critical Monitor and Store Description.

5.4.4.5.1 Base Message Formats [B50.2.1] The message is defined as a 30-word message consisting of:

a.	Word 01 -	Header (some header words already defined/reserved)
b.	Word 02 -	Validity words (1 bit per word with bits 15 and 16
c.	Word 03 -	of word 03 always set to logic 0)
d.	Word 04 - thru Word 29	Data words (up to 26 data words are available for use)
e.	Word 30 -	Checksum or 0000 HEXADECIMAL (LAST WORD if 26 data words are in use)

5.4.4.5.1.1 Notice 3 [B40.2.1] The message is still defined as a 30-word message, However, the make up of the message is slightly different in two ways. First, the data word field is now 02-29 with the validity words optional, both in use and position, for all except critical messages. Secondly, the checksum use is optional for all non-standard messages and there is no longer a requirement to use the alternative of 0000 HEXADECIMAL.

5.4.4.5.2 Mission Store Control [B50.2.2.1] This is a 30-word message, utilized as follows:

a. Header (0400 HEX)
b. Validity
c. Control Words (14)
d. Reserved Words (12)
e. Checksum

The 14 control words can be further broken down:

a. Critical Control 1 and 2
b. Critical Authority 1 and 2
c. Aircraft System Time (2)
d. Fuzing Mode Selection
e. Arming Time/Distance for various modes (4)
f. Selection of Rate or Number to Fire
g. Discrete Control 1 and 2

5.4.4.5.2.1 Notice 3 [B40.2.21] Prime differences are the reduction in control words from 14 to 11 and the consequent increase in reserved words from 12 to 15. The control word changes are that the Aircraft System Time and Discrete Control has been eliminated and selection of rate or number to fire has become 2 (two) words, entitled Fire Interval and Number to Fire.

5.4.4.5.3 Mission Store Monitor [B50.2.2.2] This is a 30-word message, utilized as follows:

a. Header (0420 HEX)
b. Validity
c. Monitor Words (3)
d. Reserved Words (3)
e. Checksum

The 3 monitor words can be further broken down:

a. Store Identity Code
b. Status of Critical Control 1 and 2

5.4.4.5.3.1 Notice 3 [B40.2.2.2] Prime differences are the increase in monitor Words from 3 to 4 and the consequent reduction in reserved words from 23 to 22. The monitor word changes are; the Store Identity Code eliminated, Fuzing/Arming Mode Status added, and Protocol Status added. The Status of Critical Control 1 and 2 words have been re-named Critical Monitor 1 and 2.

5.4.4.5.4 Store Description Message [B50.2.2.3] This message basically provides two facilities: Store Identification, either binary or alpha-numeric, and Store Data Transfer requirements. The store identification facility is discussed first. A 30-word Store Description A message is utilized as follows:

a. Header (0421 HEX)
b. Store Description Page Number (0 DECIMAL)
c. Country Code
d. Store Identity Code (BINARY)
e. Store Type ASCII (5)
f. Implementation of Receive Sub-addresses 0-31 (2)
g. Implementation of Transmit Sub-addresses 0-31 (2)

h. Maximum Receive Busy Time
i. Maximum Synchronize Mode Command Busy Time
j. Maximum Power-up Busy Time
k. Maximum IBIT Busy Time
l. Reserved Words (12)
m. Checksum

The store description page number word (0) and the four sub-address implementations are connected with the Store Description B utilization. The five store type ASCII words give in fact ten alpha-numeric characters because each 16 bit word is split into 2 X 8 segments.

Store Description message B is also a 30-word message and utilized as follows:

a. Header (0422 HEX)
b. Store Description Page Number (1-62 DECIMAL)
c. Header Code allocated to described message
d. Data Entity Codes for data words 4 through 29 of described message (26)
e. Checksum

By use of certain bits in the Synchronize with Data Word mode code, the aircraft can, as an option, get the store to identify itself (message A) and then select the pages (B messages) detailing the store receive and transmit data requirements. These pages are allied to the specific sub-addresses notified in message A by page number, 1-62. Note that as each message is described it carries its own unique header word.

5.4.4.5.4.1 Notice 3 [B40.2.2.3] Only the first facility, that given in the old message A, now remains. It, the Store Description Message, is still a 30-word message, albeit with a slightly altered utilization:

a. Header (0421 HEX)
b. Country Code
c. Store Identity - BINARY
d. Store Identity - ASCII (8)
e. Maximum IBIT Time
f. Reserved Words (17)
g. Checksum

Obviously, with the abandonment of the Store Data Transfer Requirement protocol, the sub-address implementation and Store Description Page Number words have been eliminated. As discussed earlier, the use of busy has almost been totally negated and this has therefore led to the removal of all the busy time words. Last, but by no means least, further research showed that 10 alpha-numeric characters was insufficient for certain 'pod' stores, for example AN/ALQ-137A(V)10, and consequently 8 (eight) words have been allocated for this function. These 8 words are, once again, split into 2 X 8 segments giving the requisite 16 alpha-numeric characters.

5.4.4.5.5 Nuclear Weapon Control Message [B50.2.2.4] This is not a standard message required by MIL-STD-1760A, but may of course have such a requirement specified in the System 2 Specification. However, MIL-STD-1760A does specify that receive sub-address 07 is reserved for these messages.
5.4.4.5.5.1 Notice 3 [B40.2.2.4] The reserve requirement has been changed from one to two sub-addresses namely 19 and 27.

5.4.4.5.6 Nuclear Weapon Monitor Message [B50.2.2.5] This is not a standard message required by MIL-STD-1760, but may of course have such a requirement specified in the System 2 Specification. However, MIL-STD-1760A does specify that transmit sub-address 07 is reserved for these messages.

5.4.4.5.6.1 Notice 3 [B40.2.2.5] The reserve requirement has been changed from one to two sub-addresses namely 19 and 27.

5.4.4.5.7 Non Standard Messages [B50.2.1] All messages not discussed earlier fall into this category. These messages are of any length, as determined by the store, from 5 (five) to 30 (thirty) words. Utilization is as follows:

a. Header
b. Validity (2)
c. Data Entities, as chosen by the store and registered in the ICD (1-26)
d. Checksum

5.4.4.5.7.1 Notice 3 [B40.2.1] There are two prime differences introduced by Notice 3, namely: Validity is optional and Checksum is optional. This, therefore, gives a possible message length of 2 (two) to 30 (thirty) words incorporating 1-29 Data Entities.

5.4.4.6 Standard Data Entities [B50.3] These, utilized as described earlier, are split into four categories:

Control/Monitor and Protocols (43)
Target Data (52)
Aircraft Data (74)
Trajectory Data (54)

With the data entities are seven diagrams defining:

Aircraft Axis System
Earth Axis System
Earth-Aircraft Alignment
Target Position - Store Trajectory [polar]
Store Axis System
Aircraft-Store Alignment
Target Position XYZ

5.4.4.6.1 Notice 3 [B40.3] Major differences are in the seven diagrams and the numbers of data entities which, overall, increased the coverage. Typically these are:

Control/Monitor and Protocol (24)
Target Data (67)
Aircraft Data (81)
Trajectory (42)

With the data entities are eight diagrams defining:

Aircraft Body Axis
Earth Axis (unchanged)

Earth - Aircraft Alignment (some notes very different)
Target and Waypoint Position XYZ from current position
Store Body Axis
Aircraft-Store Alignment (very different)
Aircraft, Target and Waypoint Position XYZ to fixed point
Target Position - Store Trajectory [polar] (minor change)

6. THE MIL-STD-1760 APPLICATION PROCESS

This section covers the process by which the MIL-STD-1760 requirements should be covered by system design.

6.1 Definition of the MIL-STD-1760A Application Process The MIL-STD-1760 Application Process encompasses all those activities that are associated with the implementation of the AEIS in an aircraft or store program. These activities are those which are concerned primarily with the solution of the interoperability requirements of the aircraft and stores, but also considers those which are specific to the design of particular avionic subsystems, and which may incorporate non-AIS functions. Clearly, there is a fine dividing line between these two types of activity. The biggest problem in defining the proper domain or boundaries of MIL-STD-1760 implementation requirements occurs in defining how "deep" into the subsystem which supports the interface, (usually the stores management system), that requirements must be defined. At one extreme, the implementation of MIL-STD-1760 consists of merely supplying the connectors and associated wiring, to which the specified functions are supplied. The other extreme involves the design of all the subsystems which are behind the interface. These may include all the electronic subsystems in the case of stores and, in the case of the aircraft, such subsystems as the SMS, the power distribution system, the analog networks, the aircraft data acquisition systems, and an element of aircraft wiring. This document addresses, principally, the implementation of MIL-STD-1760 on the aircraft side of the interface. The point at which the dividing line between MIL-STD-1760 implementation and subsystem (or equipment) design should be drawn is a subjective issue, and may well, in practice, depend upon the constraints that prevail in a particular implementation (Section 7 describes those functions that are considered to be contained within the AIS). Any discussion providing practical implementation guidance must clearly cover particular system, hardware and software considerations and as such the discussion must encroach on the avionic/store subsystem designs. Consequently, it is important firstly to define the boundary, or definition, of the system which will implement MIL-STD-1760, that is the AEIS Implementation System (AIS). Thus, this document addresses the application processes and implementation issues which are associated with the AIS as it impacts the aircraft. The MIL-STD-1760 Application Process tends to follow the phases of any normal acquisition program. These phases may be summarized as:

Phase 1 - AIS System Definition
Phase 2 - AIS System Performance Definition
Phase 3 - AIS Design and Development
Phase 4 - In-Service and Planned Improvements

Figure 6.1 shows the principal issues that need to be considered during each of these phases. The paragraphs of this document discuss implementation issues and guidance associated with each of these phases. The following table 6.1 defines the content of each paragraph.

6.2 Discussions of Issues and Guidelines in Sections 7 Through 13 As indicated in table 6.1, sections 7 through 13 include the issues and guidelines relevant to each stage of a MIL-STD-1760 implementation. Each of these paragraphs include a list of issues which relate to the paragraph title. The issues and related guidelines have been derived from four models, which separately studied the implementation of MIL-STD-1760. These are defined as:

a. The AEIS Validation System Rig (AVS RIG). This is a full hardware and software implementation of MIL-STD-1760.

b. The F-16 Case Study (F-16C/D). This study undertook a MIL-STD-1760 implementation design on the F-16C/D aircraft.

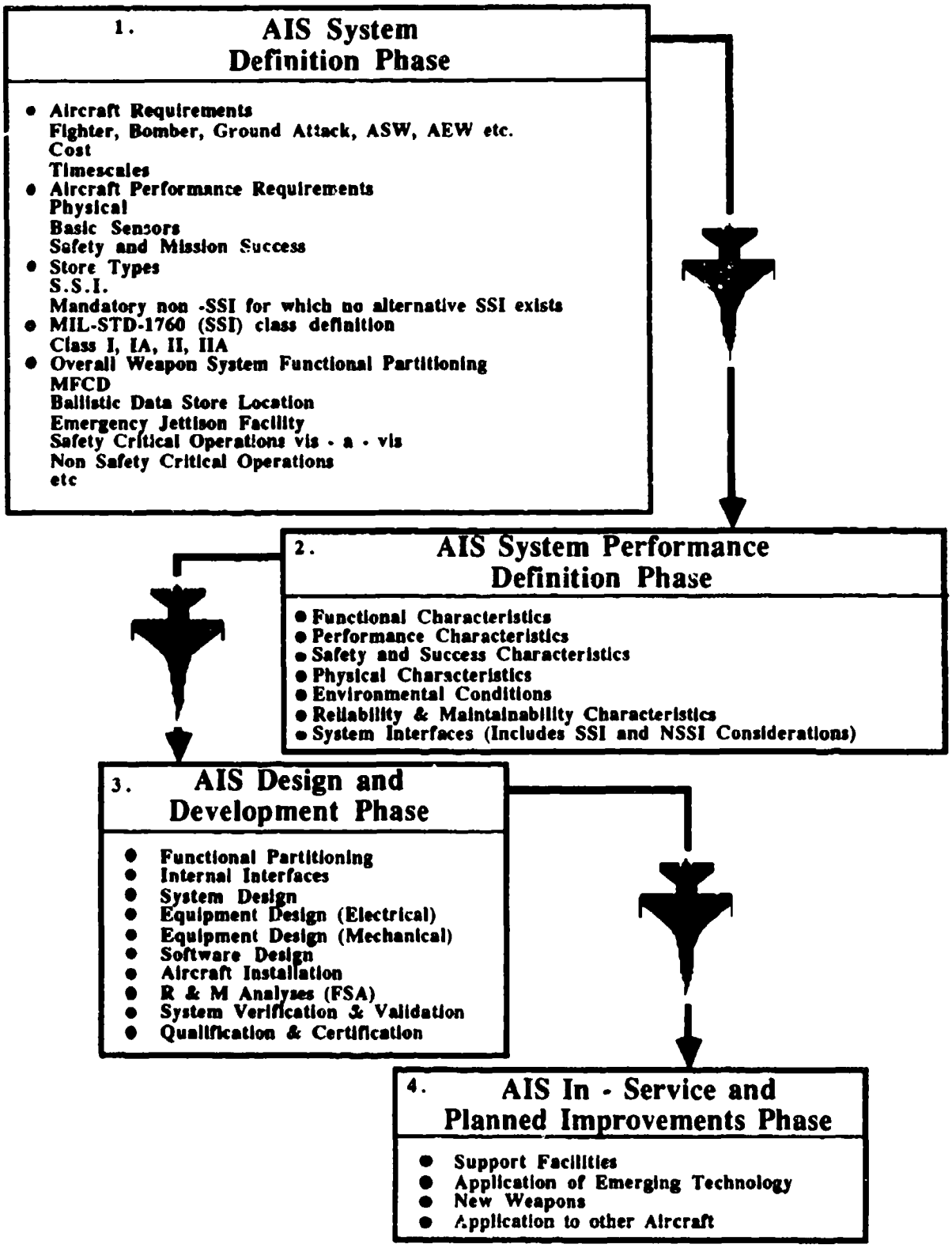

FIGURE 6.1 AIS Implementation Phases

TABLE 6.1 Relationship between Paragraphs and Application Process Phases

Phase	Section Number	Section Title
AIS System Definition Phase	7	AIS System Definition Issues & Guidelines
AIS System Performance Definition Phase	8	AIS System Performance Issues & Guidelines (this includes ASI interface definition)
AIS Design & Development Phase	9	AIS System Design Issues & Guidelines
	10	AIS Equipment Issues & Guidelines
	11	AIS Software Issues & Guidelines
	12	AIS Installation Issues & Guidelines
	13	AIS System Integration, Testing & In-Service Support Issues & Guidelines

c. The survey of planned MIL-STD-1760 implementation on aircraft and stores.

d. General Contractor's Experience.

Each issue has been derived from one, or more, of these models. The source of the guidance has been derived from one, or more, of the following five processes:

a. HIGH LEVEL system design considerations
b. AIS DESIGN activities
c. MIL-STD-1760 Test and Evaluation (1760 EVAL) activities
d. Evaluation of the LDD (LDD EVAL)
e. Evaluation of the overall AIS System (AIS EVAL)

Table 6.2 shows the applicability of each of these five processes to the four implementation models. The lists of issues contained in sections 7 through 13 each contain the following information:

a. The paragraph number
b. The issue title
c. The definition or explanation of the issue
d. Implementation guidance for the issue (This guidance may have been derived from more than one example. In which case, the lessons learned from each example have been consolidated into the guidance given.)

Table 6.2 Applicability of guidance source to implementation example

IMPLEMENTATION MODEL	GUIDANCE SOURCE				
	HIGH LEVEL	AIS Design	1760 Eval	LDD Eval	AIS Eval
AVS Rig	X	X	X	X	X
F-16 Case Study	X	X	X		
Survey	X	X			
Contractor Experience	X	X			

Note: X indicates Issues & Guidelines Derived

6.3 CROSS REFERENCE Section 14 of this document contains an index cross referencing the issues, and MIL-STD-1760A.

7. AIS SYSTEM DEFINITION ISSUES AND GUIDELINES

7.1 Overall AIS Definition This section describes those issues which relate to the definition of the AEIS Implementation System (AIS) from an overall system viewpoint. The section contains the following major paragraphs:

Overall definition of the AIS	7.1
Prime objectives and requirements that drive the AIS design	7.2
Overall weapon system functional partitioning	7.3
Weapon system partitioning guidance	7.4
Future growth potential	7.5

7.1.1 AIS Definition

ISSUE: Define the functional boundary of the AIS and how these functions are implemented in the AIS.

GUIDANCE: The AIS has been defined as the system that implements the AEIS. It is important to recognize, particularly with existing aircraft, that this is not an exclusive definition. As shown in figure 7.1, the AIS system may not necessarily be a single specification and procurement process, and also the equipment or equipments that fulfill the AIS function may additionally implement other functions. Where an existing aircraft, or aircraft design, is upgraded to provide MIL-STD-1760 capability then existing equipment will probably be retained to provide part of the interface. This existing equipment will then become part of the AIS which will therefore implement functions other than pure MIL-STD-1760. It is the determination of which functions should also be implemented in the AIS that is the most important factor in AIS design. Section 7 addresses principally the AIS definition, but also briefly considers non-aircraft functions. In determining which functions are included in the AIS, some will usually be judged on technical considerations alone. While this approach has been followed in much of the information here, it is important to recognize that technical elegance alone is not a true objective. The true objectives are those measurable for the aircraft program, and are essentially cost, timescale and aircraft performance.

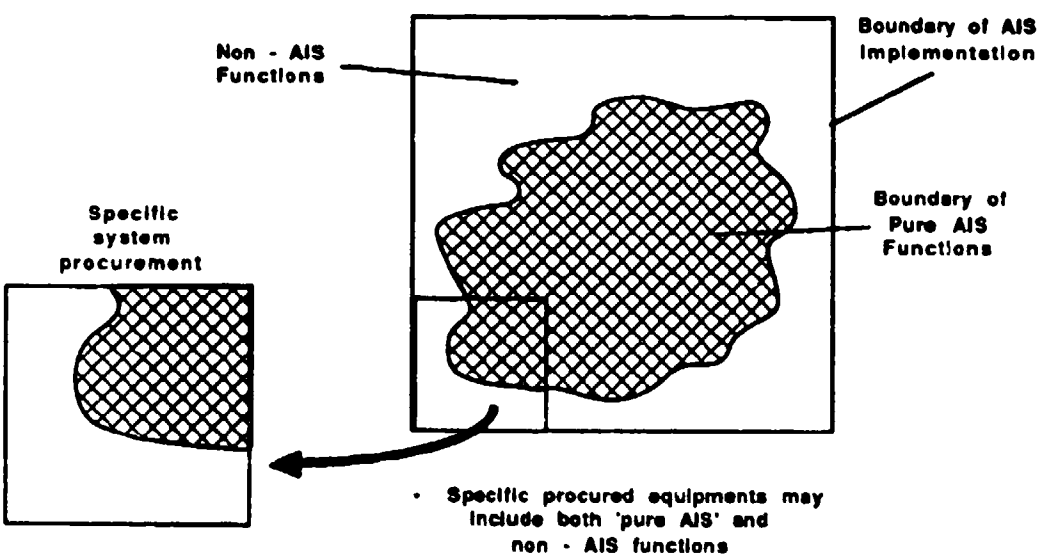

FIGURE 7.1 Non-exclusivity of the AIS

7.1.2 Implementation/Procurement Strategy

ISSUE: Should MIL-STD-1760 be implemented fully or at all on an aircraft or store program?

BACKGROUND: For most major system development efforts, the Government is careful not to force specific designs on competing contractors. For this reason, MIL-STD-1760 implementation direction has historically been soft, such as; "the Contractor should consider use of MIL-STD-1760." Further, as the standard interface is a solution for life-cycle electrical integration problems and may be seen as an expensive alternative for integrating a single store type, pressure will be placed on project offices to grant exceptions to a MIL-STD-1760 interface requirements. Industry cannot solve this problem if they have to provide lowest cost solutions to immediate electrical integration problems.

GUIDANCE: The government has to recognize the longer term benefits of MIL-STD-1760 and accept the initial investment required for its implementation. Criteria for selecting implementation targets could be:

a. All new store developments (or major modifications)
b. All future aircraft
c. Existing aircraft integrating new stores

Industry and the government could also ensure that even when MIL-STD-1760 is not directed, the design is not one that inhibits downstream implementation of the standard.

7.1.3 Partial MIL-STD-1760 Implementation

ISSUE: What is the useability of partially compliant MIL-STD-1760 interfaces?

BACKGROUND: MIL-STD-1760 contains many specific and detailed requirements. With an aircraft such as the F-16 there are existing equipments that provide many of the MIL-STD-1760 features although not necessarily with full compliance to the requirements. An example of this is current limiting. Some of the MIL-STD-1760 requirements such as 1.6 GHz only apply to store types not planned for all locations on the aircraft. Arguments could be formed that these requirements need not then be implemented.

GUIDANCE: The use of partially compliant MIL-STD-1760 interfaces is not permitted. MIL-STD-1760 implementation on aircraft is intended to remove the requirement for further electrical modification during the airframe life. Implementation of non-compliant sub sets will lead to uncertainty as to the aircraft compatibility of future stores. To avoid unnecessary costs MIL-STD-1760 provides for four classes of interface (I, IA, II, IIA) and implementations must conform to the relevant requirements.

RATIONALE: All MIL-STDs are subject to review and any requirements found to be unreasonable should be removed from future issues (or notices).

7.1.4 Impact of Integrated Avionics

ISSUE: How is the boundary of the AIS defined in an integrated avionics architecture?

BACKGROUND: The trend towards integrated avionics is typified by programs such as Pave Pillar. Although these programs have as their prime objectives reduced lifetime cost and increased performance the program together with various supporting technology programs have produced several design implementations. These include:

a. A common system architecture
b. Specifications for backplane and high speed bus connections
c. Common modules such as processors, interfaces
d. Flight line removability of modules
e. Integration of multiple systems into 3/4 ATR form racks.
f. Multiple processing tasks on single modules and redistribution of processing tasks for fault tolerance

These concepts are shown in figure 7.2.

GUIDANCE: The potential problems in defining the AIS boundary arise from points e and f. above. The following guidance should clarify the position:

a. The lack of an LRU physical boundary in an integrated rack does not mean that there is no AIS boundary. If various modules inside that rack can be determined as AIS modules then their boundary forms the AIS boundary.

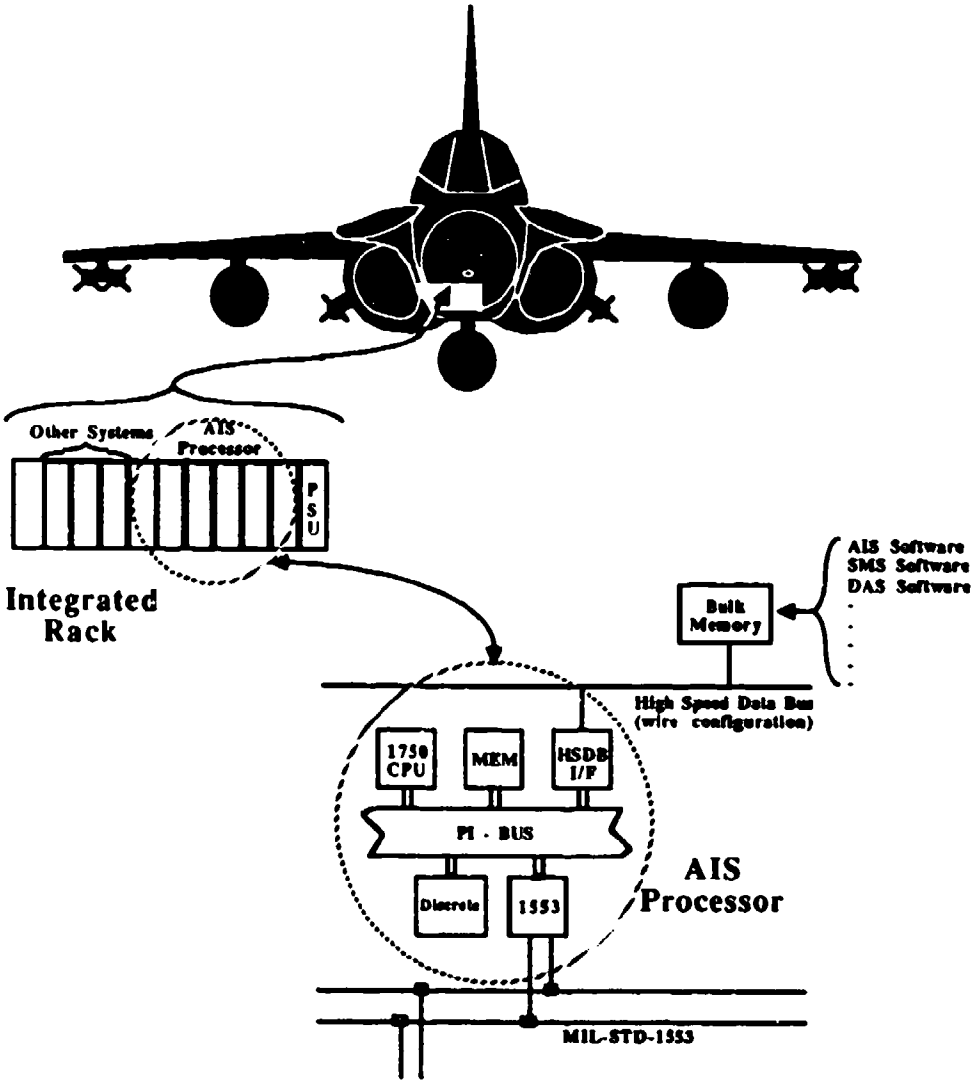

FIGURE 7.2 Integrated Avionics Concepts

b. The use of shared data buses and shared processing between the AIS and other functions (excluding the SMS) is discouraged because of the high safety requirements and the difficulties in proving integrity in such a shared system. See also paragraph 9.

c. If a data bus is shared between the core AIS and another system then that data bus becomes in effect part of the AIS. The AIS then also implements Data Bus control for the other system. This however does not mean that the AIS becomes the whole avionics. The core AIS is restricted to those electrical interfaces and data directly connected with the MIL-STD-1760 interface.

d. If a module is shared between the core AIS and another system then that module data bus becomes in effect part of the AIS. The AIS then also implements features of the other system. This again does not mean that the AIS becomes the whole avionics. The core AIS is again restricted to those electrical interfaces and data directly connected with the MIL-STD-1760 interface.

e. Where the allocation of modules and/or data buses to different functions is dynamically reconfigured for fault tolerance then the boundary of the AIS will be dynamically reconfigured at the same time.

7.2 Program Objectives As described above, the prime objectives are cost, timescale and aircraft performance. These are discussed here in aircraft terms. It is important that these objectives are clearly set for the aircraft program, and set in outline for the AIS program before the AIS definition commences. Only then can correct decisions be made relating to the implementation of the AIS.

7.2.1 Cost Factors

ISSUE: What are the AIS Cost Elements and what is their magnitude?

GUIDANCE: AIS Cost has three elements: cost of ownership, cost of production, and cost of development. The split between these depends on the number of aircraft involved in the program. Clearly if only one aircraft was produced (as in a demonstration program) then the development costs might exceed all the other costs. It is the general case, however, that the Cost of Ownership exceeds the Cost of Production which exceeds the Cost of Development. In determining the cost constraints of the AIS, therefore, priority should be given in that order to the costs.

7.2.1.1 Cost of Ownership It is difficult to set cost constraints in monetary terms for this element. This is because of the uncertainty of the length and mode of service the AIS will experience. It is preferable therefore to set limits on the factors that effect Cost of Ownership, and these are the maintenance, test and operation costs reflected in elements as shown in table 7.1. Specific limits for these factors will depend on the specific aircraft and service requirements.

7.2.1.2 Cost of Production It is easier to place a cost limit in monetary terms on production cost. It is common for an overall target cost for repeat aircraft (build or retrofit) to be set at an early date, and it is not difficult to assess the AIS portion of this. From previous experience, it can be stated that for a new aircraft the AIS cost might be between 1-2% of the repeat cost of the aircraft.

TABLE 7.1 Table of Cost of Ownership Factors

Factor	Sub-elements
Maintenance	Reliability (Mean Time Between Defects - MTBD)
	Mean Time to Repair (MTTR)
	Mean Time to Diagnose (MTTD)
	Required Spares
	Scheduled Maintenance per Flight Hour
	Equipment Lifetime
Test	Support Equipment Required
	Mean Time-to-Test (MTTT)
	BIT Modes and Level
Operation	Average crew time for AIS per mission
	Support Equipment

7.2.1.3 Cost of Development It is only possible to set limits on the cost of project specific development. Non-specific research and development, whether contractor or government funded, can only be assessed and limited by consideration of more global factors. The limit to be set on the AIS development cost will depend on the specific nature of the project, but for a new aircraft program a cost of 1% of the total development cost would not be unexpected.

7.2.2 Timescale Factors

7.2.2.1 Development Timescales

ISSUE: What are the timescale considerations?

GUIDANCE: Timescale is an important factor to be defined before design consideration of the AIS is undertaken. On a typical aircraft development project, times of 3 years to first full system flight, and 5 years to in-service date might be expected. For many programs a limited capability AIS/SMS (jettison only) may be required at an early date to allow developmental flying. It is important that the project-specific timescales are recognized at an early date.

7.2.2.2 Aircraft and Store Timescale Compatibility

ISSUE: Will aircraft be MIL-STD-1760 compatible in time for MIL-STD-1760A weapons?

BACKGROUND: This issue concerns the problem of various aircraft and weapon programs implementing MIL-STD-1760 in different and potentially conflicting timeframes. An example is a complex air-to-ground weapon requiring full MIL-STD-1760 capability with an IOC of 1995, when the associated aircraft will not have a full implementation until 2000.

GUIDANCE: A resolution of this issue could be the establishment of a MIL-STD-1760 Control Board reporting to management levels within DoD. This is the same as that for other management issues. A Control Board could be implemented that can dictate compatible implementation direction among different programs, support implementation funding, and monitor implementation decisions. This board would establish policies that will ensure compatible implementations.

7.2.3 Define Aircraft Performance Requirements

ISSUE: Define overall aircraft requirements which impact the design of the AIS (such as Mission Success, System Safety, Physical Constraints).

Aircraft Program Without a clear understanding of the aircraft mission and performance requirements, definition and subsequent design of the AIS will be poor. Aircraft performance has many elements, but the most relevant are listed below. Only when these factors have been fully defined can the AIS contribution be defined. Section 8 provides specific AIS performance requirements.

Missions	Strategic
	Tactical
	Defense
Stores	Number of Locations
	Different Types
	Rates of Employment
Targeting	Information Sources
	Accuracy of Delivery
Safety	Hazards per Hour
	Mission Aborts per Hour
Weight	
Flight Envelope	Temperature
	Altitude
	EMC

7.3 Overall Weapon System Functional Partitioning

ISSUE: Which weapon system functions should the AIS Implement?

GUIDANCE: Once the high level objectives have been set, as described in paragraph 7.2, the aircraft implementor can commence definition of the AIS. The first phase of this is to determine the key functions the AIS will execute. The key decision in this determination will be whether to implement a separate AIS or one combined with the Stores Management System function.

7.3.1 The AIS and the Stores Management System (SMS) function

ISSUE: Should the AIS be implemented in the Stores Management System?

BACKGROUND: Although there is no common definition of an SMS for aircraft (different functions are implemented in different aircraft SMS) there is a common core of SMS functions nearly always implemented. These are:

a. Weapon Inventory
b. Store Selection
c. Arming Control
d. Release Control
e. Jettison Control

It is common for the SMS to implement control of power and data interfaces for existing (non MIL-STD-1760) interface stores.

GUIDANCE: Given the above SMS definition, the AIS should definitely be incorporated with the SMS function for new aircraft types and if equipment capability or expansion capability exists, then also for retrofit or upgrade aircraft programs.

7.3.2 Summary of Functional Partitioning

ISSUE: What are the main allocations of Weapon System functions?

GUIDANCE: Figure 7.3 shows how all of the functions of the total weapon system (aircraft, crew, stores) have to be split between the AIS the stores and the rest of the aircraft (including crew). Table 7.2 lists the most relevant potential functions for consideration of inclusion in the AIS. Paragraph 7.4 provides guidance as to where these functions should be allocated. Table 7.2 has been marked with 'X' to show where functions are definitely located, 'o' where they are probably located, and also a * where the function would not be located in the AIS if a separate SMS were implemented.

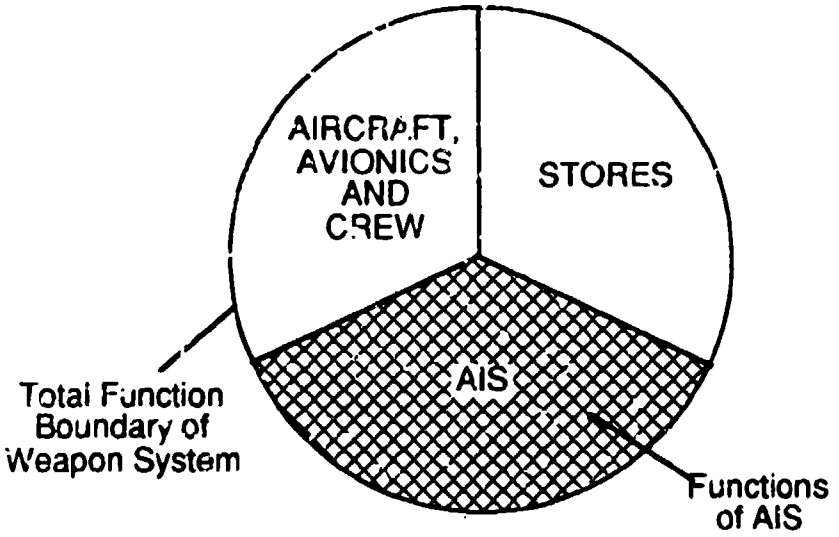

FIGURE 7.3 Weapon system function partitioning

TABLE 7.2 Weapon system functions

KEY FUNCTION	SUB FUNCTIONS	LOCATION		
		AIS	STORE	AIRCRAFT
STORE INTERFACE	MIL-STD-1760 - ASI	X		
	MIL-STD-1760 - MSI		X	
	Non-AEIS Signals	o		*
	Suspension			X
	Post-Launch			o
STORE STATE	State Change Prompt			o
	State Command	o		
	State Monitor	o		
	Power Supply Management	o		

X - definite location of function o - probable location of function
* = location of function if a separate SMS implemented

TABLE 7.2 Weapon system functions - continued

KEY FUNCTION	SUB FUNCTIONS	LOCATION		
		AIS	STORE	AIRCRAFT
DATA TO STORE	Store to Store Data Source		X	
	Aircraft Raw Data Source			X
	Unique to Store Formatting	o		
	Recomputation to Store Axes	o		
	Interface with Store	o		
DATA FROM STORE	Raw Data Source		X	
	Unique to User Formatting	o		
	Recomputation to User Axes	o		
	Interface With Avionics	o		
STORE SELECTION	Type Determination			o
	Station Determination	o		•
	Number Selection			o
	Store Initialization Management	o		
	Release Package Retention	o		•
STORE ARMING	Arming Mode Determination			o
	Arming Implementation		X	
	Arming Management	o		
	Arming Times Computation	o		
STORE RELEASE	Release Prompt			X
	Suspension Equipment Management	o		•
	Weapon Bay Management	o		•
	Release Management	o		•
	Release Timing	o		•
	Impact Point Determination			X
	Release Sequence Determination	o		•
	Hang-Up Detection	o		•
	Balance Management	o		•
	Engine Control Assistance	o		•
STORE JETTISON	Jettison Prompt			o
	Selective Jettison Management	o		•
	Emergency Jettison Management	o		•
	Store Safe Verification	o		
INVENTORY	Inventory Determination			o
	Inventory Confirmation	o		
	Inventory Update in Mission	o		•
CREW INTERFACE	Displays			o
	Critical Controls	o		
	Non-Critical Controls			o
NUCLEAR CONTROL	Suspension Equipment (S&RE)			o
	S&RE Management	o		•
	PAL Code Provision			o
	Two Person Action			o
	Crew Controls	o		•
	Crew Displays	o		•

X - definite location of function o - probable location of function
• = location of function if a separate SMS implemented

7.4 Weapon System Partitioning Guidance

7.4.1 Store Interface

ISSUE: Definition of those store interface functions implemented by the AIS.

GUIDANCE:
7.4.1.1 MIL-STD-1760-ASI As shown in figure 5.1, the ASI is the final point of the aircraft implementation of MIL-STD-1760. It is therefore not implemented by the store and, since it is a pure MIL-STD-1760 function, it is definitely an AIS function.

7.4.1.2 MIL-STD-1760-MSI As shown in figure 5.1, the MSI is a pure store function.

7.4.1.3 Non-AEIS Signals These are the signal interfaces to stores such as a Sidewinder and HARM which do not conform to MIL-STD-1760A. Many signals for such stores are almost identical in specification to MIL-STD-1760A signals (Examples are power and video signals). Even signals such as Sidewinder guidance analogs, that are electrically incompatible, contain data types common with MIL-STD-1760 stores. These data types would therefore be best computed and processed by the AIS. Application guidance for new aircraft is therefore to implement non-AEIS store signals in the AIS. This may not apply to retrofit of MIL-STD-1760 to existing aircraft designs. In such cases, it is possible that existing equipment and wiring are present that adequately implement the required interfaces. Where this is found, then non-AEIS signals incompatible with MIL-STD-1760 should not be implemented in the AIS, except where there is insufficient space for retention of the existing equipment.

7.4 1.4 Suspension Store suspension is a mechanical function and has little in common with MIL-STD-1760 implementation. It is therefore considered a non-AIS function, but the management of the store suspension racks and launchers may be implemented by the AIS. This is discussed in 7.4.7. below.

7.4.1.5 Post Launch Post-launch aircraft-store interfaces can be by radio frequency (RF) links, laser illumination or direct wire/fiber connection. These mechanisms have little in common with MIL-STD-1760 interfaces and are not best implemented in the AIS.

7.4.2 Store State

ISSUE: Definition of Store State functions implemented by the AIS.

GUIDANCE:
7.4.2.1 State Change Prompt The normal "prompts" for initiating changes in store critical states are positive crew action (Master Arm, Trigger, etc) or automatic analysis of threat data. State change prompt is therefore a non-AIS function in general terms. The AIS may be required to implement store-specific change prompts when a change is detected in another store. Examples of this are selecting, arming or releasing a store automatically following failure or release of another store. Although most functionality is concerned with the store critical state the AIS will have to manage the store mode (for example slaving, locked etc).

7.4.2.2 State Command MIL-STD-1760 specifies in detail the command and data actions required for store critical state changes. The generation of State Commands is therefore an AIS function.

7.4.2.3 State Monitor MIL-STD-1760 specifies in detail the critical monitor mechanisms and data formats. The monitor of store critical state and comparison against commanded states is therefore an AIS function.

7.4.2.4 Power Supply Different store states may require different power supply provisions. Since the power interfaces are defined by MIL-STD-1760 and the critical state is demanded by the AIS, then the management of power is an AIS function. Note however that data specifying total available power is an input to this function and that that data is from a non-AIS source.

7.4.3 Data to Store

ISSUE: Definition of the Data to Store transfers that are processed by the AIS.

GUIDANCE:
7.4.3.1 Store to Store Data Source Since the data originates in the store this is not an AIS function. Provision of network paths is considered to be an AIS function, but is defined here under (7.4.3.5) Interface to Store.

7.4.3.2 Aircraft Raw Data Source Clearly this is not an AIS function, but only when referred to raw data such as radar returns, air pressure etc. The more the data is processed then the more likely the function should be in the AIS. As guidance, if the data resulting from a process or computation is only used by stores, then the AIS or even the store should implement that process/computation.

7.4.3.3 Unique to Store Formatting MIL-STD-1760 defines data formats for stores, but these are not required to be used by other aircraft systems. Any reformatting required solely for stores should be implemented in the AIS.

7.4.3.4 Recomputation to Store Axes Target and aircraft position data will frequently be referenced in the aircraft axis system. Store suspension will, in many cases, result in stores being suspended with significant angular or positional offsets from the aircraft system and, accordingly, recomputation to the store axes will be required. MIL-STD-1760 provides data formats for this to occur either in the store or the aircraft. The location of this function will therefore depend on the store Interface Control Document (ICD). Should this specify the store axes as the reference for interface data then the AIS will have to recompute to the store axes. Total system performance will be higher if the store executes the recomputation. The AIS will also be required to recompute data where aircraft data is not provided in a MIL-STD-1760 compatible axis system.

7.4.3.5 Interface to Store As discussed in 7.4.1, this is an AIS function.

7.4.4 Data from Store

ISSUE: Definition of the Data from Store transfers processed by the AIS.

BACKGROUND: Data from stores is a similar issue to data to stores, discussed in 7.4.3 above. Guidance is therefore similar.

GUIDANCE:
7.4.4.1 Raw Data Source Not an AIS function, but where the raw data is processed is a separate issue. As guidance, store-unique (type or location) processing should be in the store and aircraft unique processing should be in the aircraft if possible. Only processing generic to all MIL-STD-1760 stores should be in the AIS.

7.4.4.2 Unique to User Formatting This is an AIS function if the user is another store, but should be an aircraft function if the user is the aircraft. In practice the aircraft user might be the same subsystem sourcing data in a non-MIL-STD-1760 format. The AIS is the best location for such bidirectional reformatting (see also 7.4.3).

7.4.4.3 Recomputation to User Axes As discussed in 7.4.3.4 the store ICD will determine where this function is implemented but ideally it should be executed by the store.

7.4.4.4 Interface with Avionics An AIS function as this is part of the AIS-Aircraft interface.

7.4.5 Store Selection

ISSUE: Definition of the store selection functions performed by the AIS.

BACKGROUND: Store selection is the function that transfers stores into a 'Ready for Use' state.

GUIDANCE:
7.4.5.1 Type Determination Store type determination during the store selection process is not an AIS function. This should be implemented by either direct crew decision or by a threat management system. The AIS may implement the sub-function of determining which specific store type. This could apply where air-to-air capability is the pilot's choice, and the AIS interprets range and other data to select missiles (long or short range) or gun. Note also that the certainty of type determination can be safety critical.

7.4.5.2 Station Determination This must be an AIS function. The data required for the function includes store types, store status, stores loadout and target/aircraft location. The most time-critical data will be store status and this is already available firstly to the AIS.

7.4.5.3 Number Selection How many stores are selected is mission state dependent and therefore is not an AIS function. The crew or threat management system are the best systems for determining this parameter. Note that the certainty of the number selection is a critical function.

7.4.5.4 Store Initialization Management Store selection will frequently require more than an ON/OFF demand. Many current and projected stores implement complex internal functions such as inertial navigation systems (INS). These systems require considerable quantities of data over periods of time before the store is 'Ready for Use'. In most cases that data will already be managed by the AIS, and therefore the management of the store processing of that data is best executed by the AIS.

7.4.5.5 Release Package Retention It is common for aircrew workload to be reduced by pre-programming detailed store usage parameters into the aircraft. (This can be by air or ground crew.) This data is generically known as a Release Package, and is usually recalled when needed by single switch or voice action. The data can be extremely complex and while only a subset is usually presented to the aircrew, the full data content has to be transferred to the stores. For these reasons the AIS is the best system to retain Release Package data. Other candidate systems are the Display System or the Stores Management System if this is separate.

7.4.6 Store Arming

ISSUE: Definition of the store arming functions performed by the AIS.

BACKGROUND: Store Arming is a safety critical function not applicable to non-weapon stores. An armed store will detonate after release, whereas a non-armed store will not. Store fuzing is the setting of the mode in which an armed store will be employed, for example burst height, and can therefore only be regarded as safety critical where a mode inappropriate to the employment has been inadvertently set. Currently, two prime methods of store fuzing are implemented, namely:

a. Air Force - Preset on the ground, either by fitting the appropriate fuze or manually

b. Navy - Set in the air, by the transmission of an analog voltage. Typically ± 300V DC or ± 195V DC, in the form of a low current pulse discharged from a capacitor.

GUIDANCE:
7.4.6.1 Fuzing Mode Determination This is not an AIS function Although six fuzing modes are defined in MIL-STD-1760 (Impact, Time, Altitude/Depth, Proximity, Position and Interference). the selection of which modes are applicable is mission dependent and therefore a crew (ground or air) function. The determination can be by preselection (See 7.4.5.5 above).

7.4.6.2 Arming Implementation This is not an AIS function. The final arming execution (detonation or non-detonation) is executed by the store on lanyard removal and this therefore implements arming.

7.4.6.3 Arming/Fuzing Management This should be an AIS function. The crew will determine whether arming should be generally enabled or disabled. The AIS translates that general command into the specific formats defined in MIL-STD-1760.

7.4.6.4 Fuzing Times/Distance Computation This should be an AIS function where aircraft safety and target penetration are affected. MIL-STD-1760 defines the formats for fuzing time transfer, although as yet few projected stores have the ability to use the fuzing time data. The AIS, once preset with fixed aircraft clearance and target data, is best placed to recompute fuzing times from aircraft velocity and height data during the mission. For data associated with area denial or burst height/depth the data should be computed outside the AIS.

7.4.7 Store Release

ISSUE: Definition of the Store Release functions performed by the AIS.

BACKGROUND: Store "release" is a function implemented by the aircraft Stores Management System (SMS). The issues addressed in this paragraph are essentially more detail on one issue: Should the SMS and the AIS be the same system? The early issues of MIL-STD-1760 presumed this to be the case, and, as discussed in 7.3 above, it is easier for many implementations if this is so. The implementor, particularly when retrofitting MIL-STD-1760 to existing aircraft, should consider this issue fully as it may be advantageous to retain a separate SMS. Where separate AIS and SMS are implemented, a tightly coupled interface will be required between the two systems.

GUIDANCE:
7.4.7.1 Release/Launch/Fire Prompt This is not an AIS function as the aircrew must have control over this function. Detailed interpretation of these prompts can be an AIS function, or even an AIS/Store function where execution depends on acquiring a target after the crew prompt (Weapon Release or Trigger).

7.4.7.2 Suspension Equipment Management This should be an AIS function. The store suspension equipment (ejector rack, rail, launchers etc) will require control from the aircraft SMS function to initiate or enable store Separation. In many cases this control will depend on store state and target data received by the AIS from the store. Interfacing and timing can be optimized if the AIS implements the SMS. In implementing MIL-STD-1760 the AIS will already have a critical data bus (1 in 100,000 hours critical error rate), and will be able to command store arming, release and jettison via the data bus and release consent signals. The AIS, therefore, is already implementing the same design features required to manage suspension equipment, eject cartridge fire and rack unlock functions.

7.4.7.3 Weapon Bay Management This function is required where aircraft have internally carried stores. During release preparation weapon bay doors will need opening, suspension and release equipment may need to be repositioned and achievement of both verified before store release. As such these are clearly functions associated with the SMS and should only be an AIS function if it is implementing the SMS.

7.4.7.4 Separation Management Separation management is the control of all AEIS and other functions, such as arming solenoids, during the store(s) separation and the prevention of separation when not demanded. As considered in 7.4.7.2 above, this should be an AIS function only if the AIS implements the SMS.

7.4.7.5 Separation Timing This is an AIS function only if the AIS implements the SMS function. Separation timing is the computation and implementation of precise times of Separation. This is more relevant where stores have no, or primitive, terminal guidance. Separation timing has traditionally been implemented by a Fire Control Computer calculating times from Separation mode, aircraft, air and store ballistic data. Three factors will lead to this separate fire control computer function disappearing. These are the trend towards integrated processing, the increasing importance of specific store station data in calculating separation timing, and the AIS having access to most of the required data to implement the function without any additional data bus transfers being required.

7.4.7.6 Impact Point Determination Impact points for stores can be specified by position; designation, for example laser; or characteristics. The top level determination of impact point is a critical function and must be determined by crew. This is therefore not an AIS function.

7.4.7.7 Separation Sequence Determination This is an SMS function that should probably be implemented in the AIS. The sequence of multiple store separations will depend on many factors including determination of store presence and status. MIL-STD-1760 data bus and interlock data will be part of this information which also includes S&RE weapon loaded monitors and therefore the AIS is a prime system for this function, if a separate SMS is not implemented.

7.4.7.8 Hang-Up Detection Similar to Separation Sequence this should be an AIS function because of the store presence data (Interlock, data bus)in MIL-STD-1760. Hang-ups (or store misfires) can also be caused by failure of stores to receive correctly the MIL-STD-1760 firing data, and therefore close coupling between the AIS and hang-up detection functions will be required.

7.4.7.9 Balance Management Balance management is the function of selecting stores for separation in such a sequence that aircraft balance constraints are not exceeded. Balance constraints can be lateral or longitudinal or both. Because of the importance of the hang-up detection to this function this should also be implemented in the AIS provided the AIS also implements the SMS function. It is possible that individual store weight, potentially identifiable by the AIS through store type data, can be used to enhance execution of this function.

7.4.7.10 Engine Control Assistance Military aircraft engines can be disturbed or even stopped by the exhaust gas from powered missile releases. Two techniques have been applied to reduce this problem. Either the engines are automatically "throttled back" during missile firing (by the engine management system receiving a signal from the AIS or other system) or the missile motor can be programmed to delay firing until clear of the aircraft (see MIL-STD-1760A data entity 0507). The use of excessive times for engine 'throttling back' or motor fire delay could be severely degrading to mission success, and therefore if a separate SMS is not implemented the AIS is the best location for this function.

7.4.8 Store Jettison

ISSUE: The definition of the Store Jettison functions that are implemented by the AIS.

BACKGROUND: Store jettison is similar to a "release" function implemented by the aircraft Stores Management System (The guidance in this paragraph does not restate the SMS guidance of paragraph 7.4.7).

GUIDANCE:
7.4.8.1 Jettison Prompt Must be under aircrew control, therefore it is not an AIS function.

7.4.8.2 Selective Jettison Management This includes Suspension and Release Equipment Management and Weapon Bay Management. If suspension equipment management is implemented in the AIS then so should selective jettison management. Another relevant factor is the requirement for some stores to have classified data erased prior to jettison. This erase process will be commanded by the AIS via the MIL-STD-1760 data stubs, and stores not thus cleared should be prevented from being selectively jettisoned.

7.4.8.3 Emergency Jettison Management Similar to Selective Jettison, this function should probably be implemented by the AIS.

7.4.8.4 Store Safe Verification Stores should normally be jettisoned unarmed (safe). For MIL-STD-1760 stores this should be effected by data bus command prior to jettison, as disabling of release consent may either not disable arming or may disable the jettison. This forces a close link between the AIS and the safe before jettison function. It is therefore best located in the AIS.

7.4.9 Inventory

ISSUE: Definition of those aspects of Store Inventory Management implemented by the AIS.

GUIDANCE:
7.4.9.1 Inventory Determination Inventory determination is a critical function. If the store loadout is not correctly known then store misfiring, or even aircraft loss can result. Inventory of MIL-STD-1760 stores can be determined in two ways. The first method is for the crew (air or ground) to enter data detailing the inventory. The second method is for the AIS to use the store description data to identify the loadout. The MIL-STD-1760 data approach has several potential failure mechanisms that could result in incorrect inventory and therefore the crew should be the prime source of inventory data. This can be implemented via an inventory panel, mission briefing data or direct cockpit entry. This function should therefore not be implemented by the AIS.

7.4.9.2 Inventory Confirmation An inventory confirmation function is often implemented because of the importance of correct inventory determination. This compares the crew declared inventory with suspension equipment monitors and store signals. Discrepancies are reported to the crew. This function is best implemented in the AIS due to the precise store type data available via the MIL-STD-1760 store description data. Other candidate locations are the SMS, if a separate system, and the display system.

7.4.9.3 Inventory Update during Mission The store inventory changes throughout a mission as stores are released or declared hung or declared failed. Both the SMS and AIS functions need an updated inventory data base to ensure correct actions. The AIS through Interlock and store monitor data has significant information to provide to this function. The function should therefore be implemented in either the SMS or both the AIS and SMS.

7.4.10 Crew Interface

ISSUE: Definition of the aspects of the crew interface implemente. y the AIS.

GUIDANCE:
7.4.10.1 Displays Displays are a non-AIS function. In modern military aircraft there are few dedicated displays, and a dedicated AIS display panel of any size would be inefficient for cockpit space and crew workload.

7.4.10.2 Critical Controls Critical controls are inputs such as Master Arm, Jettison, Trigger, etc., which provide prompts to critical SMS and AIS functions such as Arming and Separation. It is unlikely that the MIL-STD-1760 data integrity requirements can be achieved unless these controls directly interface to the AIS, and so they should be considered as part of the AIS. It is likely that they will be implemented as part of the aircraft but the AIS guidelines will still apply.

7.4.10.3 Non-Critical Controls Similarly to displays, there is little cockpit space available in modern military aircraft in which to provide dedicated AIS controls. The non-critical controls such as select, target, etc., should therefore be shared with other functions and should not be part of the AIS.

7.4.11 Nuclear Control

ISSUE: Definition of those aspects of Nuclear Weapon Control implemented by the AIS.

BACKGROUND: There are no current MIL-STD-1760 nuclear stores. An interface specification for nuclear stores based on MIL-STD-1760 is being developed (System 2).

GUIDANCE:
7.4.11.1 Suspension and Release Equipment (S&RE) Similar to conventional stores discussed in 7.4.1 above, the suspension equipment is an aircraft function and not an AIS function.

7.4.11.2 S&RE Management Similar to conventional stores discussed in 7.4.7 above, S&RE management could be an AIS function because of the detail interfacing required with store status data. The impact of this function on the AIS would be very significant due to the extra integrity required, and this would in effect be an addition of a separate nuclear system additional to the AIS. As such this should be a non-AIS function unless a combined AIS/SMS is implemented.

7.4.11.3 PAL Code Provision A crew function hence non-AIS. The AIS will, however, transfer the data to the store.

7.4.11.4 Two Person Action This function should be a non-AIS function as it relates to cockpit layout, organizational procedures and other criteria not relevant to provision of a MIL-STD-1760 nuclear AIS.

7.4.11.5 Crew Controls Crew controls for data demanded by the nuclear interface (arming, codes, functions) will require careful design to ensure high integrity is retained. These should therefore be an AIS function.

7.4.11.6 Crew Displays Similar to crew controls, the displays of data relevant to the nuclear interface should be an AIS function to retain integrity.

7.5 Future Growth Potential

ISSUE: What future growth potential is required by the AIS?

GUIDANCE: The history of aircraft and their internal systems shows that modifications are continually needed to change the "current" design to match new requirements. For the AIS these changed requirements will be of two forms: added (or changed) functions, higher (or amended) performance of those functions. Paragraphs 7.1 - 7.4 have considered the functions that the AIS should implement. It would be difficult to provide meaningful guidelines for changes in the functionality of an AIS as the aircraft changes that prompt this will be too aircraft specific for general guidance to be given. Section 8 considers the performance required of each function and outlines potential growth requirements. Specific expansion provision requirements are defined in 8.3.1.

7.6 Summary This section (7) has considered the functional boundary of the AIS. As itemized below, a set of AIS core functions and a set of AIS probable functions have been determined.

AIS CORE FUNCTIONS

- MIL-STD-1760 ASI IMPLEMENTATION
- STORE STATE COMMAND & MONITOR
- POWER SUPPLY MANAGEMENT FOR MIL-STD-1760 STORES
- DATA INTERFACES TO STORE
- INTERFACE WITH OTHER AVIONICS
- MIL-STD-1760 STORE INITIALIZATION MANAGEMENT
- MIL-STD-1760 STORE ARMING/FUZING MANAGEMENT
- MIL-STD-1760 STORE SAFETY VERIFICATION

AIS PROBABLE FUNCTIONS

- EXISTING STORE INTERFACE IMPLEMENTATION
- UNIQUE TO STORE DATA REFORMATTING
- UNIQUE TO STORE AXES RECOMPUTATION
- UNIQUE TO AVIONICS DATA REFORMATTING
- STORES MANAGEMENT SYSTEM FUNCTIONS:
  - SELECTION
  - ARMING
  - RELEASE
  - JETTISON
  - INVENTORY
- CRITICAL CONTROLS (MASTER ARM, TRIGGER etc)
- NUCLEAR WEAPON SMS FUNCTIONS (IF REQUIRED)

8. AIS SYSTEM PERFORMANCE ISSUES AND GUIDELINES

This section discusses those issues which relate to the performance definition of the AIS. The guidance given relates to generic AIS implementation and may differ from other general requirements of specific programs. In such cases the higher of the two requirements should apply. The following major paragraphs are included:

Approach to AIS performance definition	8.1
Performance factors associated with each function defined in section 7	8.2
Performance factors associated with other characteristics such as reliability, physical and environmental factors	8.3
AIS System interfaces with the stores, aircraft and crew	8.4

8.1 Approach to AIS Performance Definition

ISSUE: The approach to defining system performance parameters

BACKGROUND: Section 7 has considered the determination of those functions that should be included in the AIS. The next level of AIS definition is to define the performance for each AIS function.

GUIDANCE: Specifying the performance of a function can be executed generically by specifying factors such as:

a. Inputs
b. Outputs
c. Input-Output dependency
d. Execution timing
e. Assurance of execution

These factors can be mapped on to all of the AIS functions. It is more helpful, however, if a more specific to function definition of performance can be used, these are described in the subsequent subparagraphs. Most detail is specified for those functions determined as core AIS functions.

8.2 AIS Functional Performance This paragraph contains paragraphs 8.2.1 through 8.2.11. These provide performance guidance for the corresponding functions of paragraphs 7.4.1 through 7.4.11.

8.2.1 Store Interface Performance

8.2.1.1 MIL-STD-1760 ASI

ISSUE: How should the performance of MIL-STD-1760 ASI be specified for the AIS.

GUIDANCE: The key performance characteristics are the number of ASIs, the category of ASI implemented at each station and the total aircraft capacity required (in terms of how many used at one time). Detail characteristics such as total data rates and networking are discussed in later sections.

8.2.1.1.1 Number of ASIs This is dependent on the total weight capability of the air vehicle, the mission roles supported and the layout of store stations. The type A system specification considered this issue and identified 6 aircraft types with 6 mission types and concluded that

between 7 and 32 ASI were required. This data is repeated in table 8-1. Guidance is therefore to first define the aircraft mission roles and number of primary weapon carriage points. A minimum of one ASI per weapon carriage point should then be implemented with consideration given to two or more at weapon carriage points with potential for multiple carriage of sophisticated weapons.

8.2.1.1.2 ASI Categories Some background information is required in order that the guidance is better understood. MIL-STD-1760 allows 4 classes of ASIs:

a. I - Full Signal Set of Primary Interface only
b. IA - Primary and Auxiliary Interfaces
c. II - Primary Interface minus HB2 and HB4 and both the fiber optic and 270V DC provisions
d. IIA - Class II plus the Auxiliary Interface

Three areas of guidance are therefore given, namely:

a. Class II ASIs are the minimal compliant interfaces. All ASIs should be at least of this type
b. Contact and cabling provision should be made to upgrade two external fuselage stations (if available) to class I interfaces
c. 270 Volt provision should be limited to contact and cabling provision for those aircraft projected to implement a 270 Volt power system

8.2.1.1.3 Total Aircraft Capacity

ISSUE: How many ASI should be available for simultaneous use.

BACKGROUND: The AIS complexity and cost will not be proportional solely to the number of ASI implemented. Data Bus rates and processing loads will as examples be more dependent on the maximum number of ASI actually in use at one time. This will have further detail such as: the number of ASIs connected to stores at one time, the number of stores powered at one time, and the number of stores actively in use at one time.

GUIDANCE:
a. All ASIs should be simultaneously connectable
b. The AIS should provide for the maximum number to be simultaneously powered within the constraints of available power (A typical limit for stores consuming full power might be four ASIs)
c. The AIS should be capable of actively controlling a minimum of two ASIs simultaneously.

8.2.1.2 MIL-STD-1760 MSI No performance relevant to AIS (not an AIS function)

8.2.1.3 Non-AEIS Signals (Existing Store Interfaces)

ISSUE: How should the performance of Non AEIS Signal Interfaces be specified for the AIS?

GUIDANCE: Similar to MIL-STD-1760 ASI the key performance characteristics are the number and locations of existing store interfaces. Each existing store interface type is unique and categories of interfaces do not as such arise. AIS performance is limited to the number of non-AEIS interfaces, their location and the aircraft capacity to simultaneously utilize multiple stores.

TABLE 8-1 Store Loadout Configurations (From Type A System Specification)

Store Types / Aircraft Types	Case	Mission	AAM / Short Range	AAM / Medium Range	AAM / Long Range	AGM / Anti - Radiation	AGM / Tactical	AGM / Strategic (N)	AGM / Cruise (N)	Air to Space Missile	Iron Bombs	Smart Bombs	Nuclear Bombs (N)	Electronic Pods	Gun Pods	Dispenser Rkt / AGM	Flare / Chaff	Tanks / Fuel	Multiple Carriage Stores	Aircraft Station Interface	Mission Store Interface	ASI + CSSI
		Numbers Of Store Types & Interfaces																				
Interceptor Combat	i	C	4	8											2		2/2		6	12	18	24
	ii	C	4	4	4										1		2/2		4	13	17	21
	iii	C	4							1				2					0	7	7	7
Ground Attack	i	D	2				6				12			2	2				6	12	24	30
	ii	E	2								12	4		2					6	10	20	28
	iii	F	2	2							4			3		2			2	11	13	15
Multi - Role	i	C	4	4	2										1	4	2/2		6	13	19	25
	ii	D	2				6				10					2			7	11	20	27
	iii	E	2								6	4		2		4			6	10	18	24
	iv	A	2	4				2	2				6	2				2	2	18	20	22
Defense Suppression	i	D	2			6	4							2		1	2/2		6	11	19	25
	ii	E	2				4					8		2			2/2		6	10	20	26
RECCE	i	F	2											3				2	0	7	7	7
Tactical and Strategic Bomber	i	A	4						24								2/2		2	30	32	34
	ii	A	4					8	12				8				2/2		2	32	34	36
	iii	B	4								96*						2/2		14	18	104	118

MISSIONS:

A. Long Range Nuclear
B. Long Range Tactical Bombing
C. Counter Air
D. Close Air Support / Battlefield Interdiction
E. Air Interdiction
F. Reconnaissance

STORES (Abbreviations used)

AAM Air-to-Air Missile
AGM Air-to-Ground Missile
(N) Nuclear Store
ASI Aircraft Station Interface
CSSI Carriage Store Station Interface

NOTE.

Nuclear Stores are not carried on Multiple Carriage Stores

* 8 Bombs on one Carriage Store

a. Number of non-AEIS Interfaces. This should be severely restricted to minimize costs. No general provision of interfaces should be implemented without firm operational requirements as it is unlikely that the store loadout will expand for non MIL-STD-1760 Stores.

b. Location of non AEIS Interfaces. To maximize the number of potential loadout configurations for greater mission roles it is preferable to distribute interface types. For example each station could support a different existing store type. Some other general guidelines are: Provide dedicated "wet" stations for fuel tanks (if separable fuel tanks are fitted) and avoid

provision of complex existing store interfaces at those stations. This is because on long missions the aircraft will have fuel tanks fitted. Any complex interface provision (such as HARM, Harpoon) at the "wet" stations will be wasted because only a simple fuel tank will be carried there. Provide existing store interfaces for heavier stores near to the aircraft natural center of gravity. Where a central interface is implemented, provide complex existing store interfaces on fuselage stations, rather than wing stations, in order to enable wiring to be reduced.

c. Aircraft Capacity It is beyond the scope of this document to provide detail guidelines for aircraft capacity for non MIL-STD-1760 stores. It is possible to read across much of the previous guidance to these stores by assessing the relevant interface characteristics.

8.2.1.4 Suspension This is not an AIS function. Relevant data on S & RE management is included in paragraph 8.2.7.

8.2.1.5 Post Launch Interfaces These are not AIS functions.

8.2.2 Store State Performance can only be specified for critical state changes because MIL-STD-1760 provides no standardization of other state definitions or control/monitor formats.

8.2.2.1 State Change Prompt

ISSUE: What are the performance requirements of the AIS in determining state change prompts.

GUIDANCE: As discussed in 7.4.2.1 most state change prompts are initiated outside of the AIS. Two possible exceptions (depending on interpretation) are store failure and store separation:

a. Store Failure: On detecting that a store has failed the AIS should set that store to the least active safe state and change the states of other store(s) of that same type to regain, if possible, the previous situation in terms of "quantity of stores ready for use." Should the store not have totally failed and its employment in a degraded mode is possible, then it may be available as the last selected weapon.

b. Store Release: On detecting that a store has been separated, then for most store types, the AIS should initiate all possible reversible state changes to bring another store of the same type to a state of 'ready' for separation.

8.2.2.2 Store State Command

ISSUE: How should the performance of the AIS be specified for the issuing of Store State Commands?

GUIDANCE: The performance will be specified by inputs, outputs, dependency, timing and execution assurance.

a. Inputs The key inputs are:

Critical Switches	Master Arm (MAS)
	Trigger (TRIG) - or Weapon Release (WR)
	Selective Jettison (SJ)
	Emergency Jettison (EJ)
Cockpit Display System	IBIT demand
	Store selected
	Type deselected (SRAAM, BOMB & AGM)
	Jettison selected
Store	Current State
	Long Term Select attribute (cooling)
AIS	Store Hung
	Store deselected
	Store next (for release jettison)
	Store due (for release jettison)

b. Outputs The key outputs are the MIL-STD-1760 Mission Store Control message (containing the Critical Control word and its associated Authority word) and Release Consent. The AIS should ensure that these are correctly formatted. The relevant states of critical control are definable by the bit patterns for D_{10}-D_3 of the critical control word and Release Consent. They are listed below.

Store states are:	Critical Control		Release Consent
RESET	0000	0000	INHIBIT
I BIT	0000	0X10	INHIBIT
SELECTED	0000	0100	INHIBIT
PRESET ARMING	0000	1100	INHIBIT
EXECUTE ARMING	0001	1100	X
COMMIT TO LAUNCH/EJECT	0011	1100	ENABLE
FIRE/LAUNCH/EJECT	1011	1100	ENABLE
JETTISON	0100	0X00	INHIBIT*

* Store may require this also to be enabled.

c. Dependency The AIS should provide interlocks on the achievement of critical states. As an example Execute Arming should not be demanded unless Master Arm has been demanded. Table 8-2 details a recommended dependency of the defined inputs and outputs. Sufficient ambiguity exists in MIL-STD-1760 such that under certain conditions poor store design could be incompatible with this sequence. Store project offices should ensure that stores: cannot fail if they are commanded to any of the store states defined in b. above; format the critical monitor data to reflect store demanded states.

d. Timing Timing requirements for critical control demands will depend on the aircraft, the store type and mission phase. For example, demand of Commit to Separate will be required with extreme urgency if a bomb has just hung in a separation sequence but less urgency is required for a missile where the target data may still be unavailable. For these reasons the specific timing performance should be embedded into the SMS functional requirements related to specific mission needs for stores management. Because the AIS may be a separate entity from the SMS the following minimum AIS performance is required: changes in State requiring change of any data bit D_{10}-D_5 of the MIL-STD-1760 critical control word must be communicated to the store within 80mS of the input conditions assuming the required states; other changes of state within 10 seconds.

TABLE 8-2 MIL-STD-1760 STATE DEMANDS

IF		&	&	&
NEW STATE	STATE NOW	Critical Switches	Cockpit Display System	AIS
RESET	ANY**	X	X	Store Hung
	or	X	X	Store Deselect
	or	X	Store Deselected	X
	*or	X	Type Deselected	X
I-BIT	RESET	ALL SAFE	Type Deselected & I-BIT demand	Not hung
SELECT	RESET	X	Type Selected	neither hung nor deselected
PRESET ARMED	SELECT or RESET	SJ,EJ = SAFE	Type Selected	neither hung nor deselected
EXECUTE ARMED	PRESET ARMED	MAS = LIVE & (SJ,EJ = SAFE)	Type Selected	neither hung nor deselected
COMMIT to LAUNCH	EXECUTE ARMED or PRESET ARMED	MAS = LIVE & TRIG or WR = LIVE	Type Selected	Store Next to Release
FIRE/LAUNCH	COMMIT to LAUNCH	MAS = LIVE & TRIG or WR = LIVE	Type Selected	Store Due to Release
EJECT	COMMIT to LAUNCH	MAS = LIVE & TRIG or WR = LIVE	Type Selected	Store Due to Jettison
JETTISON	ANY	SJ and MAS = LIVE or EJ	X	Store Next

X = don't care * = only if store has no long term select attribute (cooling)
** = RESET should not be demanded if COMMIT to LAUNCH has been demanded unless a fault or an emergency conditions arises

e. Execution Assurance Assuring for critical states has the two basic parameters of assuring the state will be demanded when required (success) and assuring the state will not be demanded when not required (safety):

Success: Maximum probability per ASI of failure of this function should be 1 X 10^{-4} after one mission hour

Safety: Maximum probabilities per ASI of incorrectly demanding states should be:

10^{-8} after one mission hour if failure corresponds to incorrect interpretation of Selective Jettison or Emergency Jettison as demanded

10^{-8} after one mission hour if failure corresponds to incorrect interpretation of Master Arm and Weapon Release as demanded

10^{-5} after one mission hour if failure corresponds to incorrect interpretation of Master Arm or Weapon Release as demanded

10^{-4} after one mission hour for all other cases

Note that for stores which do not implement Release Consent as an interlock on any state, the AIS must provide the above level of safety for the data bus path alone. This position is less serious following issue of MIL-STD-1760A Notice 3 which minimally requires Release Consent as an interlock on all irreversible critical functions excluding jettison.

8.2.2.3 State Monitor

ISSUE: How should the performance of the AIS be specified for the monitoring of store states.

GUIDANCE: The AIS should positively monitor for achievement of all demanded MIL-STD-1760 states. Specifically, where no ICD data is available to further optimize the implementation, the MIL-STD-1760 Critical Monitor word should be monitored for:

a. Correct demanded state within 100mS of demanding each new state

b. Achieved state, within 100mS of demanding each new state, at minimum 10Hz, until either the state is achieved or the store declared as failed

c. At a minimum rate of 0.5 Hz for every store with power applied

8.2.2.4 Power Supply Management

ISSUE: How should the performance of the AIS be specified for MIL-STD-1760 Power Supply Management?

GUIDANCE: The AIS must comply with all MIL-STD-1760 requirements including Voltage, Current and Fault Isolation at each ASI. In addition the AIS should:

a. Ensure that power requirements for any demanded state are provided before demand of that state.

b. Ensure that provision of energization of power signals at MIL-STD-1760 interfaces is minimized. Particular care should be made to avoid premature energization of 28 Volts 2 or Auxiliary 28 Volts and to remove all power at disconnected interfaces.

c. Ensure that the total simultaneous power available at MIL-STD-1760 interfaces is compatible with mission requirements. As a minimum, any four ASI should be able to simultaneously supply full current capability.

8.2.3 Data To Store Data to store is considered here as limited to: MIL-STD-1553 data, High Bandwidth signals, Low Bandwidth signals, and Release Consent. Address discretes and Power supplies are considered to provide low level information not requiring specific data guidelines.

8.2.3.1 Store to Store Data Source Not an AIS function, see 8.2.3.5 for detail on networks.

8.2.3.2 Aircraft Raw Data Source As defined in section 7, although the aircraft raw data source is not an AIS function, the transfer of aircraft data and the store specific data processing are AIS functions. Issues that arise are therefore:

a. Data Formats
b. Data Availability
c. Data Accuracy

d. Data Latencies and Update Rates

8.2.3.2.1 Data Formats

ISSUE: What data formats should be used for aircraft data received by the AIS?

GUIDANCE: All data from aircraft to the AIS should be in MIL-STD-1760 formats for word and entity definition. This only applies when considering data formats for new aircraft equipment. The AIS should execute any necessary reformatting of data from existing avionic equipment (For example the air data computer may not provide data in MIL-STD-1760 formats).

8.2.3.2.2 Data Availability

ISSUE: What data types should be available to the AIS?

GUIDANCE: The AIS should minimally make interface, processing and memory provision for the transfer (with recomputation as required) of the following MIL-STD-1760 data entities from aircraft data: Fuzing/Arming data; Aircraft System Time; Aircraft Inertial position (and velocities) in latitude/longitude and local XYZ forms; Aircraft to Store alignment data; and Target position (and velocities) for up to 4 targets from 16 in latitude/longitude, local XYZ, and polar forms. Provisions should also be made for an 100% increase in the above data. Where target velocity data is not available to the AIS the AIS should provide processing to generate velocities by rate change computation. This processing should only be executed when stores are being targeted that can utilize the velocity data.

8.2.3.2.3 Data Accuracies

ISSUE: What accuracy is required for aircraft data transferred to and through the AIS?

GUIDANCE: The AIS should minimally provide computational accuracy for the following data types as indicated in Table 8-3. As an example of an inaccuracy calculation, the inaccuracy of Target Velocity data received by the store should be maximum ±2 meters/second. This is the sum of the aircraft and AIS inaccuracies.

Table 8-3 Data Inaccuracies

Data Type	Aircraft Error*	AIS Inaccuracy
Fuzing Times	± 1mS	± 1mS
Fuzing Positions	± 1 meter	± 1 meter
Aircraft System Time	± 2.5mS	± 2.5mS
Aircraft Position	± 5 meters	± 5 meters
Aircraft Velocity	± 0.5 m/second	± 0.5m/second
Aircraft-Store Position	± 0.1 meter	± 0.1 meter
Aircraft-Store Angles	± 0.001 semicircles	± 0.001 semicircles
Target Position	± 5 meters	± 5 meters
Target Velocity	± 1 meter/second	± 1 meter/second
Target Angles	± 0.001 semicircles	± 0.001 semicircles

* Aircraft error is an assumed figure and is not a performance characteristic of the AIS. It is quoted to provide an indication of the inaccuracy of data received by the store (In many cases the supplied data will be more inaccurate).

8.2.3.2.4 Data Latencies and Update Rates

ISSUE: What AIS performance should be specified for data latency and data update rates?

BACKGROUND: Data latency is defined as the time delay from data being presented to the AIS from the avionics, to being received by the store via the ASI. Update Rates are defined as the number of times in a set time period that a data type is meaningfully retransmitted by the AIS to a store.

GUIDANCE: Maximum data latency and minimum update rate performance capable of being provided by the AIS, should be as shown in Table 8-4 for the indicated digital data types. For Analog Signals (High and Low Bandwidth) the maximum data latencies shown in Table 8-5 should be provided.

TABLE 8-4 Digital Data Latencies and Update Rates

Data Type	Maximum Latency	Minimum Update Rate
Target Positions	100 mS	20 Hz
Target Velocities	100 mS	20 Hz
Aircraft Positions	120 mS	15 Hz
Aircraft Velocities	120 mS	15 Hz
System Time	*	-
Other Data	1 second	1 Hz

* System Time latency is not relevant; see 8.2.3.2.3 for allowable data inaccuracy

TABLE 8-5 Analog Data Latencies

Signal	Maximum Data Latency
HB 1	500 ns
HB 2	500 ns
HB 3	20 ms
HB 4	20 ms
LB	20 ms

8.2.3.3 Unique to Store Formatting

ISSUE: What AIS performance should be specified for the reformatting of aircraft data into unique to store formats?

GUIDANCE: The AIS should as a goal receive all aircraft data in MIL-STD-1760 formats compatible with store required formats. Where this is not feasible (because of unique to store formats or because of retention of avionic equipment with other formats) then the AIS should provide for all required reformatting without exceeding the limits of accuracy, latency and update rate performance specified in 8.2.3.2. Special care should be taken in aircraft and store design to avoid the need for reformatting of High Bandwidth signals.

8.2.3.4 Recomputation to Store Axes

ISSUE: How should the performance of the AIS be specified for recomputation of aircraft data to store axes?

GUIDANCE: As discussed in 7.4.3.4, this will probably be an AIS function. The AIS should provide for all required reformatting without exceeding the limits of accuracy, latency and update rate performance specified in 8.2.3.2.

8.2.3.5 Interface to Store Most AIS performance factors for provision of MIL-STD-1760 interfaces are discussed in 8.2.1. Additional performance factors discussed in this paragraph are: Analog network - network paths provided and signal performance; Release Consent - assurance, timing, and isolation.

8.2.3.5.1 Analog Network

ISSUE: How should the performance of the AIS be specified for Analog Networks?

GUIDANCE: The AIS analog network should comply with all MIL-STD-1760 requirements for implemented High Bandwidth and Low Bandwidth interfaces. Additionally the AIS should provide the following network and signal performance for the signal interfaces HB1, HB2, HB3, HB4, LB. Performance requirements for all signal types should be simultaneously available.

a. HB1/HB2 - The AIS should minimally provide the following network performance: transfer of one type B signal between any one ASI and the aircraft (either direction), or transfer of two type A signals between any two ASI and the aircraft, or transfer of a type A signal between any two ASI (either direction) and a type A or B signal between any other ASI and the aircraft (either direction).

b. HB3/HB4 - The AIS should provide the following network performance: transfer in either direction of two type A signals between any two ASI and the aircraft, or transfer in either direction a type A signal between any two ASI and a type A signal between any other ASI and the aircraft.

c. In addition to all MIL-STD-1760 requirements, the AIS shall limit type B signal attenuation and noise such that GPS signals received by the store have a minimum 0.01 uV P-P amplitude.

d. LB - The AIS should provide the following performance: transfer in either direction of a LB signal between any ASI and the aircraft.

e. In addition to all MIL-STD-1760 requirements the AIS shall limit maximum attenuation to 6dB for signals of 20 Hz to 1 MHz passed between aircraft and store. The signal path characteristic impedance should be 78 ohms $\pm$ 10%.

f. The AIS network performance is shown in figure 8-1.

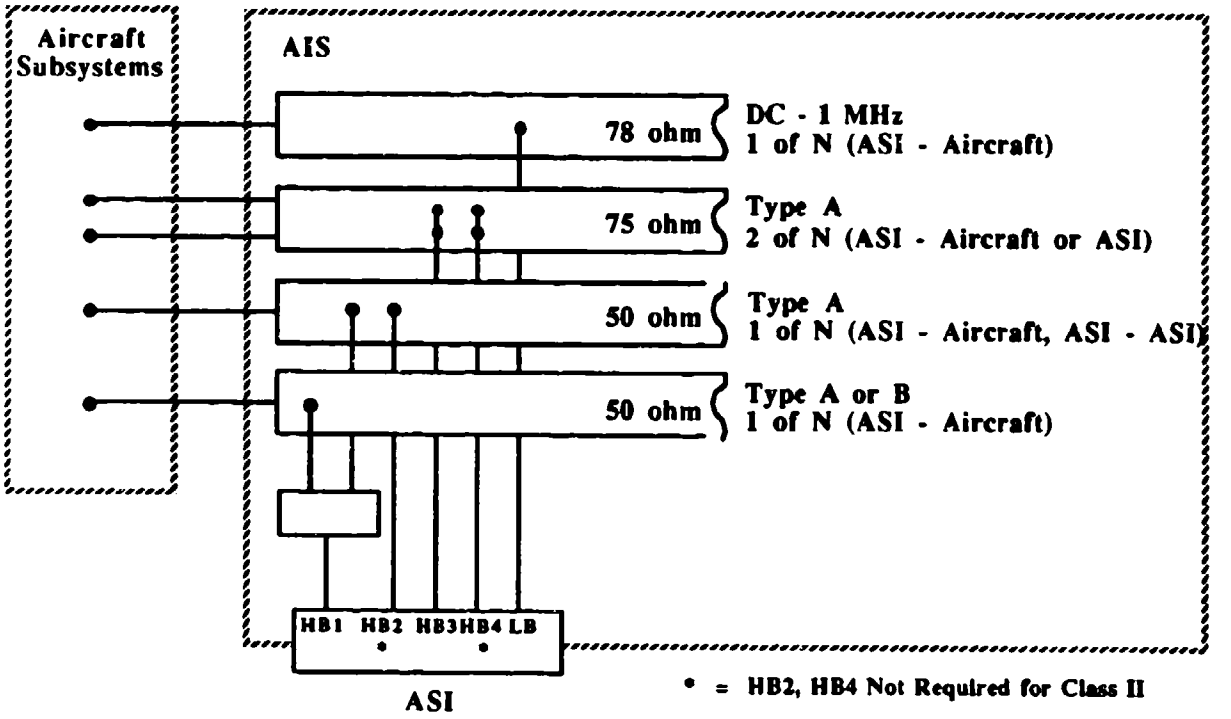

FIGURE 8-1 AIS Analog Network Requirements For N ASI

8.2.3.5.2 Release Consent

ISSUE: How should the performance of the AIS be specified for Release Consent?

GUIDANCE: The AIS should comply with all MIL-STD-1760 requirements for Release Consent with isolation requirements interpreted as c. below. Additionally the AIS should provide the following assurance, timing and isolation:

a. Assurance: The AIS shall ensure that the maximum probability of failure to set the correct state for Release Consent is: 10^{-6} after one mission hour for enabling when neither Master Arm or Jettison are demanded, compliant with performance specified in 8.2.2.2.5, and readily verifiable by simple and brief design analysis following modifications to any AIS non-critical software.

b. Timing: To satisfy the performance requirements defined in 8.2.2.2.d and MIL-STD-1760A Notice 3, the Release Consent signal must be enabled by the AIS within 60 mS of the AIS input conditions assuming the required states.

c. Isolation: To clarify the Release Consent isolation requirement so as not to exclude designs with BIT monitors on interfaces, the AIS shall interpret the isolation requirements of MIL-STD-1760 as follows: the steady state current through a 1 Kohm load shall not exceed 5 mA when the interface is in an inhibited state, and the steady state current shall not increase by more than 250uA when any other Release Consent interface is enabled.

8.2.4 Data from Store Data from Stores is considered here to be limited to MIL-STD-1553, High Bandwidth and Low Bandwidth data. Many AIS requirements for data from stores are similar to those defined for data to stores in 8.2.3.

8.2.4.1 Raw Data Source As defined in section 7 the store raw data source is not an AIS function but the transfer of the store data is. Issues that arise are therefore:

a. Data Formats
b. Data Capabilities
c. Data Accuracies
d. Data Latencies and Update Rates

8.2.4.1.1 Data Formats

ISSUE: What data formats should the AIS be capable of receiving from stores?

GUIDANCE: Where possible all data from stores should be in MIL-STD-1760 formats. It is likely that many divergent formats will be used for store monitor data entities unless strong project direction is provided. The AIS should therefore be compatible with receiving MIL-STD-1760 formats for messages and words with additionally the capability to process 10 words per store type of unique to store monitor data entities.

8.2.4.1.2 Data Capabilities

ISSUE: What store data types should the AIS be capable of processing to provide decisions and aircraft data?

GUIDANCE: The AIS should minimally provide interface, processing and memory capacity for the following data entities from stores: Vector Word, Store Identity, BIT Times, Critical Monitor 1, Rounds remaining, Target position (in latitude/longitude, XYZ or polar form), Store state of health data, Store position (in latitude/longitude or XYZ format from INS), Store reference system alignment and position, and an 100% increase in all of the above data.

8.2.4.1.3 Data Accuracy

ISSUE: What accuracy is required for data received from stores?

GUIDANCE: The accuracy of data available from stores is not a performance factor of the AIS. However the AIS performance for data reformatting for either aircraft or store end users should be defined as shown in Table 8-6.

TABLE 8-6 Store Data Accuracies

Data Type	Maximum AIS Inaccuracy for end user	
	Another Store	Aircraft
Store position	± 5 meters	± 5 meters
Store Velocity	± 0.5 m/second	± 0.5 m/second
Target Angular Position	± 5 X 10^{-4} semicircles	±5 X 10^{-3} semicircles
Target Position	± 5 meters	± 5 meters

8.2.4.1.4 Data Latencies and Update Rates

ISSUE: How should the performance of the AIS be specified for data latency and data update rates for data from stores?

GUIDANCE: For store to store transfers the AIS should provide performance as specified for aircraft data in 8.2.3.2.4. For store to aircraft data the AIS should provide capability for the performance as shown in Table 8-7.

TABLE 8-7 Store Data Latencies and Update Rates

Data Type	Maximum Latency	Minimum Update Rate
Target position	200 ms	10 Hz
Store Position	150 ms	15 Hz

8.2.4.2 Unique to User Formatting

ISSUE: How should the performance of the AIS be specified for reformatting of store data to match other store or aircraft requirements?

GUIDANCE: The AIS should, as a goal, receive all data in MIL-STD-1760 data formats compatible with all MIL-STD-1760 store and all aircraft equipments. Where this is not feasible, the AIS should provide for all reformatting required for the initial defined store loadout.

8.2.4.3 Recomputation to User Axes

ISSUE: How should the performance of the AIS be specified for recomputation of store data to store or aircraft axes?

GUIDANCE: As described in 7.4.4.3, this will probably be an AIS function. The AIS should provide for all necessary axes conversion without exceeding the limits of accuracy, latency and update rate performance specified in 8.2.4.1.

8.2.4.4 Interface with Avionics

ISSUE: How should the performance of the AIS be specified for Store data interfacing with other avionics?

GUIDANCE: This is provided in paragraph 8.4 where a clearer definition of avionics interface guidance is given.

8.2.5 Store Selection The AIS functions determined in paragraph 7.4.5. are: Station Determination, Store Initialization management, and release data package retention.

8.2.5.1 Station Determination

ISSUE: How should the performance of the AIS be specified for determination of which stations should have stores selected?

GUIDANCE: Stations should be selected sequentially by the AIS in the order that store separation would best be executed. This can vary with aircraft type, store type and mission dynamics. A default set of rules for sequentially selecting 'next' stores as the number selected increases is:

a. The "next" store must be of the correct type and not failed.

b. Assuming all other selected stores of that type are successfully separated then the separation of the "next" store must not violate balance constraints. if a pairs separation mode is selected and the "next" store will be the second of a pair then additionally the potential release must not violate balance constraints if the first of the pair hangs up.

c. If the last store selected is located in a multiple store Weapon Bay then the next store should be from the same bay. Otherwise the "next" store should not be from the same station as the previous store selected. Consideration should be given that this rule may require inverting for weapon bay aircraft so as to minimize aerodynamic disturbance during release.

d. The "next" store should not be from a station adjacent to the previous store selected.

e. The "next" store should be from the side of the aircraft nearest to the target.

f. The "next" store should be from the Port side of the aircraft (this provides for a definite choice when two or more stores satisfy all the other checks).

8.2.5.2 Store Initialization Management

ISSUE: What AIS performance should be specified for the store initialization management?

GUIDANCE: Specific and quantitative guidance cannot be provided for this function as initialization requirements are at least in part specific to store type. General performance guidance is provided for three initialization types; INS alignment, tuning, and cooling/run up.

8.2.5.2.1 INS Alignment The AIS should provide for INS alignment of stores. Typical performance is defined below:

a. Phases - The alignment should be split into coarse alignment and fine alignment phases

b. Coarse alignment - During coarse alignment the AIS should:
- Inform the store that coarse alignment is required
- Transfer aircraft velocity and aircraft-store angles, or direction cosines, to the store. The update rate may be as high as 10Hz for "fast risetime" stores or as low as 0.2 Hz for strategic missiles.
- Coarse alignment should be terminated when: the store informs the aircraft that coarse alignment has been achieved, or the AIS can monitor that the store INS "velocities" are sufficiently matched to the aircraft velocities, or the AIS can determine that coarse alignment should be aborted (typically due to time out of 5 minutes for strategic missiles or shorter for tactical stores)
- When coarse alignment has been achieved, fine alignment should be started

c. Fine Alignment - During fine alignment the AIS should
- Inform the store that fine alignment is required
- Transfer aircraft velocities, position and aircraft-store angles, or direction cosines, to the store. The update rate may typically be 0.01 Hz for strategic missiles.
- Fine alignment should be terminated when the store is released, or the store is long term deselected, or the AIS can determine that fine alignment should be aborted because of errors in the store monitored velocities and positions.

8.2.5.2.2 Tuning The AIS should provide for some stores to be tuned while initializing. This function will not require active tuning by the AIS, as in the existing Sparrow, but the following should be implemented:

a. Provision for stores to delay achievement of selection by some seconds while tuning to high bandwidth signals.

b. Provision of "alert" or re-tune commands to store when relevant high bandwidth signals change in character.

c. Provision for stores to "deselect" while re-tuning.

8.2.5.2.3 Cooling/Run Up The AIS should provide for some stores to require lengthy initialization during selection. Examples of current inventory stores with such functions are Sidewinder (cooling of seeker) and Harpoon (heating). The following should be implemented:

a. Provision for some stores to delay achievement of selection by some minutes while cooling/running up

b. Avoidance of deselection of these stores even when other stores are selected (reference table 8-2 note 2)

8.2.5.3 Release Package Data Retention

ISSUE: What AIS performance should be specified for the release package retention?

GUIDANCE: The AIS should provide for a minimum of eight weapon packages to be retained with a further minimum of one for each store type loaded. The packages should be stored/recalled by receipt of single word avionic data command. The AIS should provide for the data shown in table 8.8 to be retained. Additionally the AIS should provide for specific to store data and data files retention to be added if required.

TABLE 8.8 Release Package Data

Data	Words	Data Source	Notes
Total to Release	1	AIRCREW	Bombs
Number/Iteration	1	AIRCREW	Single/Pair/Salvo
Meters Spacing	1	CREW	Bombs, Distance (L) data
Manual Spacing (ms)	1	CREW	Bombs
Fuzing Mode	1	CREW	as MIL-STD-1760
Fuzing Distances	8	CREW/Avionics	as MIL-STD-1760
Target Position	6	GROUND LOAD	XYZ or latitude/longitude/height
Trajectory	24	GROUND LOAD	4 Waypoints
Target Description	16	JTIDS	Typically Emission Data
Other	16	-	Expansion

8.2.6 Store Arming/Fuzing

ISSUE: What AIS performance should be specified for the Store arming?

GUIDANCE: The AIS functions as determined in paragraph 7.4.6 are Arming/Fuzing Management and Fuzing Times Computation. These are further discussed in 8.2.6.1 - 8.2.6.2.

8.2.6.1 Arming/Fuzing Management

ISSUE: What AIS performance should be specified for the Arming/Fuzing Management?

GUIDANCE: The AIS should control the armed/safe status of MIL-STD-1760 stores by energizing/de-energizing the arming solenoids and implementing the store critical state function as defined in 8.2.2. The AIS should implement special mechanisms to ensure stores are safe during jettison unless specifically demanded to be jettisoned armed.

8.2.6.2 Fuzing Times Computation

ISSUE: What AIS performance should be specified for the fuzing times?

GUIDANCE: The AIS should provide the following fuzing times performance.

a. Provision of default values for store fuzing times. These default values will be specific to aircraft/store combination and should be defined during development.

b. Provision for receipt of fuzing distance data from the aircraft. Specifically the following should be received:

- Minimum safe separation
- Aircraft height (at release)
- Weapon release dynamics (ejection velocity, rate of fall, drag etc)
- Aircraft velocity (at release)
- Function height/depth

c. Recalculation of fuzing times from the above data at a minimum of 10Hz during approach and release.

d. Transfer of fuzing data to stores and verification of correct receipt. Fuzing data should only be updated when a meaningful change in value is detected to reduce probability of corrupting "safe" fuzing times.

8.2.7 Store Release

ISSUE: What AIS performance should be specified for the Store Separation?

GUIDANCE: The AIS functions as determined in paragraph 7.4.7 are listed below. They are all implemented in the AIS only if also implementing the SMS function. As such they are not core AIS functions and only brief guidance is given.

Suspension Equipment Management	Weapon Bay Management
Separation Management	Separation Timing
Separation Sequence Determination	Hang up Detection
Balance Management	Engine Control Assistance

8.2.7.1 Suspension and Release Equipment Management

ISSUE: What AIS performance should be specified for the Suspension and Release Equipment Management?

GUIDANCE: The AIS should provide signals for the control and monitor of S&RE. The control and monitor signals for a typical weapon station are shown in table 8.9.

TABLE 8.9 Typical AIS - S & RE Signals

Signal Name	IN/OUT	Signal Form
EJECT/FIRE PRIMARY	OUT	28 Volt/10 Amp/Pulsed
EJECT/FIRE SECONDARY	OUT	28 Volt/10 Amp/Pulsed
RELEASE/FIRE PRIMARY	OUT	28 Volt/10 Amp/Pulsed
ARMING 1 (Nose)	OUT	28 Volt/10 Amp/Pulsed + 1 Amp continuous
ARMING 2 (Tail)	OUT	28 Volt/10 Amp/Pulsed + 1 Amp continuous
UNLOCK (MISSILE)	OUT	28 Volt/1 Amp
GROUND RETURNS (2)	OUT	0 Volt/20 Amp Pulsed
WEAPON LOADED	IN	2PDT CONTINUITY SENSE (6 signals)
LOCK MONITOR	IN	CONTINUITY TO GROUND RETURN
LAUNCHER BIT	IN	CONTINUITY TO GROUND RETURN
IN FLIGHT LOCK	OUT	28 Volt/1 Amp continuous with 2PDT monitor

Additionally the AIS should provide for the following functions of the signals of table 8-9:

a. EJECT/FIRE - Used to separate hook mounted stores or jettison any store (rail launch missiles will be jettisoned downwards with their launchers). The AIS should provide that after one mission hour the probability of inadvertent activation of one of these signals or of failure under emergency jettison of both signals is extremely low. Typically the performance should be both quantitative (10^{-7}) and qualitative (no single fault shall cause).

b. RELEASE/FIRE - Used to separate rail launch stores (for the Modular Rail launcher this removes the electrical connections from the aircraft to the store). This signal may also be used for non MIL-STD-1760 stores to directly initiate motor firing. The AIS should provide inadvertent activation performance similar to Eject/Fire and should possibly implement two signals for assurance of release.

c. WEAPON LOADED - Used to monitor for store presence. The AIS should verify all signals in correct state during inventory confirmation and monitor for changeover of switch contacts during eject release or jettison.

d. IN FLIGHT LOCK - This is generally for nuclear weapon use (see 8.2.11). This signal is sometimes used to increase safety for carrier based aircraft.

8.2.7.2 Weapon Bay Management

ISSUE: What AIS performance should be specified for the Weapon Bay Management?

GUIDANCE: There are no generic implementations of weapon bays and therefore AIS performance should be specified individually for each aircraft. Typical AIS functions for weapon bays might be:

a. Provide redundant initiation signals to open and close bays. This must be achieved before and after the release.

b. Provide initiation signals for any required S&RE vertical translation and/or rotation

c. Monitor achievement of above demands, via monitor switches and provide interlocks on release process

8.2.7.3 Separation Management

ISSUE: What AIS performance should be specified for Separation Management?

GUIDANCE: The AIS should:

a. Prevent separation when not demanded by critical controls - after 1 mission hour the probability of inadvertent separation should not exceed 10^{-7} and prior to Master Arm or Jettison no single AIS failure should cause inadvertent separation.

b. Assure separation - after 1 mission hour the probability of failure to separate any store when demanded should not exceed 10^{-3} and where possible no single AIS failure should prevent separation of one weapon of any store type.

c. Provide critical state control to stores that potentially could be separated. This should also include presetting of reversible states to stores whose separation will only be required should separation of any store fail.

d. Provide for "dead facing" of power at the ASI of separated stores.

e. Provide for tolerance of "no responses" to data bus commands to stores that have just been separated.

f. Prevent interpretable radiation of sensitive data from ASI data stubs to areas outside the aircraft.

g. Reconfigure analog networks to provide maximum connection paths to stores by deleting and reusing network circuitry for stores separated.

h. Monitor interlock signals for determination of "store gone/separated."

i. Provide for aerodynamic and probability of success analysis to interlock the separation process.

8.2.7.4 Separation Timing

ISSUE: What AIS performance should be specified for Separation Timing?

GUIDANCE: The AIS should provide for rapid and accurately timed store separations. If store internal delays and station to station minimum spacings are ignored, the AIS should provide for the following performance:

a. Separation timings accurate to 3 ms calculated from spacing and aircraft dynamic data
b. Separation intervals as short as 30 ms with up to two stores separated per interval
c. Minimum safe intervals for stores
d. Separation spacings from 10 to 1000 meters
e. Salvo separation with sequenced separation of selected stores at maximum 10 ms interval with no hang up monitoring

8.2.7.5 Separation Sequence Determination

ISSUE: What AIS performance should be specified for the Separation Sequence?

GUIDANCE: As defined in 8.2.5.1 specific separation sequences may vary with aircraft, store or mission. The AIS should determine separation sequences as the selection sequences but should additionally provide for dynamic changes of sequence should stores fail to separate or lose target acquisition.

8.2.7.6 Hang up Detection

ISSUE: What AIS performance should be specified for the Hang up Detection?

GUIDANCE: As discussed in 8.2.7.1 and 8.2.7.3, the AIS should monitor the Weapon loaded signals and MIL-STD-1760 interlock signals to determine that a store has been successfully separated. Failure of any two signals to change state within 25 ms of initiating ejection should be interpreted as a hung store. If store does not hang up then failure of all four signals to change over within 50 ms should be interpreted as a mission tolerable failure. Should a store fail to release within the required time it should be declared "hung." Hung stores should be set safe as specified in 8.2.2.2 table 6-2. Hang up detection may be suspended during salvo releases where mission requirements dictate release at a faster rate than the response times of the S&RE weapon loaded indicating switches. Stores may also be set hung during release if any of the following are detected, although it is preferable that a 'store degraded' state be reported:

Failure to achieve demanded critical states	Failure of MIL-STD-1553 communication
Store unsafe condition reported	Store "fatal" failure reported

8.2.7.7 Balance Management

ISSUE: What AIS performance should be specified for the Balance Management?

GUIDANCE: The AIS should determine and modify separation sequences to preserve the aircraft balance within the limits defined as follows. For aircraft of wingspan W and length L:

a. Maximum Lateral Imbalance Moment = 200 W Kg meters

b. Maximum longitudinal Imbalance Moment = 200 L Kg meters

Note that where stores are mounted on wings that can be swept, then the wing sweep angle will affect these calculations.

Example - For an aircraft of wingspan 13 meters (43 feet) the imbalance should be limited to a Mk 83 bomb at a pylon/station 5.73 meters (18 1/2 feet) from the aircraft centerline. Alternatively a Mk 84 bomb 2.87 meters (9.3 feet) from centerline.

8.2.7.8 Engine Control Assistance

ISSUE: What AIS performance should be specified for the Engine Control Assistance?

GUIDANCE:

a. When demanding separation of rail launched stores, rockets or guns the AIS should provide discrete advisory data to the aircraft to indicate that engine performance may be disturbed. The data format will be specific to aircraft and should indicate whether separation is from port or starboard. The data should be present for a minimum of 20 ms before and 100 ms after each release.

b. When demanding separation of eject launched stores with internal rocket motors, the AIS should compute and transfer Motor Fire Delay data (MIL-STD-1760A data entity B40.3.1.21) to Stores capable of acting upon the data. Default times should be 1600 ms (ensures 13 meters/50 feet separation with gravity drop).

8.2.8 Store Jettison

ISSUE: What AIS performance should be specified for the Store Jettison?

GUIDANCE: The AIS functions as determined in paragraph 7.4.8 are listed below. They are all implemented in the AIS only if also implementing the SMS function. As such they are not core AIS functions and only brief guidance is given.

- Selective Jettison Management
- Emergency Jettison Management
- Store Safe Verification

8.2.8.1 Selective Jettison Management

ISSUE: What AIS performance should be specified for the Selective Jettison Management?

GUIDANCE: The AIS should provide the following:

a. S & RE Management as defined in 8.2.7.1

b. Weapon Bay Management as defined in 8.2.7.2

c. A minimum of four selective jettison modes:

- Selective Jettison Package: A preselected set of defined stores determined by crew action. These may be selected for armed or safe jettison.

- Post Release Jettison: Automatic compilation of a crew initiated selective jettison package to jettison all stores "hung" during release (refer to 8.2.7.6).

- Combat Jettison: Automatic compilation of a crew initiated selective jettison package to remove all stores (including carriage stores) not essential to air-air combat.

- Station Jettison: Ability to individually jettison all stores from selected stations. This may be safe or unsafe.

d. Selective Jettison should be implemented via a sequenced pattern of store separations. The default sequence should be of the same basic form as the release sequence defined in 8.2.7.5 except that store types may be multiple. The timing should be the minimum safe duration (default time of 80 ms) and the balance requirements of 8.2.7.7 should be met. Where possible the sequence should be optimized to remove the maximum weight as fast as possible. This will modify the sequence where stores have either long jettison execution or minimum safe spacing timings.

e. Jettison prevention, assurance, critical state control, power deadfacing, "no response" tolerance and sensitive data protection as specified for release in 8.2.7.3

8.2.8.2 Emergency Jettison Management

ISSUE: What AIS performance should be specified for the Emergency Jettison (EJ) Management?

GUIDANCE: The AIS should provide an Emergency Jettison function. This should be identical to Selective Jettison except as that it should be initiated by a separate critical cockpit switch, have no operator definable packages, and have a higher assurance. After 1 mission hour the probability of being unable to emergency jettison any store when intended should not exceed 10^{-6}. No single AIS failure should prevent the emergency jettison of any store when intended. All stores will be jettisoned safe when EJ is demanded except for:

- Nuclear Weapons
- Stores from stations determined by aircraft design as not essential for EJ
- Stores only jettisoned by forward firing

8.2.8.3 Store Safe Verification

ISSUE: What AIS performance should be specified for the Store Safe Verification?

GUIDANCE: The AIS should provide the following for jettisoned stores:

a. Data Bus and S & RE management to remove any arming and fuzing if jettison is not demanded as armed. Where stores can be monitored and cannot be set safe then selective jettison of these stores should be inhibited and the crew notified so that they can consider alternative action.

b. Where security sensitive stores are selected for unarmed selective jettison, data bus commands to demand, and monitor for achievement, erasure of all sensitive data. Where stores can be monitored and cannot be set "clear" the selective jettison of these stores should be inhibited and the crew notified so that they can consider alternative action.

8.2.9 Inventory

ISSUE: What AIS performance should be specified for the Inventory?

GUIDANCE: The AIS should provide the following Inventory functions:

a. Inventory load
b. Inventory confirmation
c. Inventory update

8.2.9.1 Inventory Load

ISSUE: What AIS performance should be specified for the Inventory Load?

GUIDANCE: The AIS should provide for an aircraft input determining inventory. This should be by receipt of a checksummed data block from avionics data bus(es) but may be by use of loadout panels. The minimum data provided should include: Store types at specific locations and Gun Rounds (if relevant).

8.2.9.2 Inventory Confirmation

ISSUE: What AIS performance should be specified for the Inventory Confirmation?

GUIDANCE: The AIS should provide for confirmation of inventory loadout by checking at mission start that:

a. S & RE weapon loaded data matches defined inventory load
b. MIL-STD-1760 interlock data matches inventory load
c. MIL-STD-1760 store type data matches inventory load at relevant stations
d. Any available existing store data matches inventory load at relevant stations

Any errors should be immediately notified to the aircrew via the avionics data bus. Stations where checks fail should be indicated as unsafe stores. The aircrew should be able to override these unsafe determinations if required. This override should be demanded via specific data commands from the avionics bus.

8.2.9.3 Inventory Update

ISSUE: What AIS performance should be specified for the Inventory Update?

GUIDANCE: The AIS should provide the following:

a. Secure data base of inventory. This should survive short term be available to the avionics via data bus commands and should minimally contain for each store station the following data: Store type, Store Loaded or Released or Jettisoned, and Store Critical State (Safe, Selected, Armed, Firing or Hung).

b. Update of inventory data base during the following processes: Store Selection. Store Release, and Store Jettison.

8.2.10 Crew Interface

ISSUE: What AIS performance should be specified for the Crew Interfaces?

GUIDANCE: The AIS functions for crew interfaces are limited in paragraph 7.4.10 to the critical controls. The following dedicated critical controls should be provided.

a. Air-Air Launch/Fire is a dedicated momentary action switch for the pilot (and also navigator if relevant).

b. Air-Ground Release is a dedicated momentary switch for the pilot (and also navigator if relevant).

c. DAS Release is a dedicated latching switch for the pilot (and navigator) allowing long term consent for release of chaff, flares and missiles for self defense. The AIS should automatically reset this control to safe if Master Arm is not demanded.

d. Master Arm is a dedicated latching switch for the pilot (and also navigator if relevant) used as consent for release preparation and weapon arming on all aircraft and jettison on some aircraft.

e. Selective Jettison is a dedicated momentary action switch for the pilot (and also navigator if relevant).

f. Emergency Jettison is a dedicated momentary action switch for the pilot (and also navigator if relevant).

g. Gear up and locked are dedicated switches sensing that the aircraft is airborne and separation will not be obstructed by the undercarriage.

h. Ground Test Override is a dedicated latching switch with a highly visible warning, such as a "flag," to allow override of gear up and locked switches when testing AIS or stores on the ground.

8.2.11 Nuclear Control

ISSUE: What AIS performance should be specified for Nuclear Control?

GUIDANCE: For nuclear certified aircraft the AIS should provide the following functions at the relevant stations:

a. S & RE Management
b. PAL code transfer
c. Controls
d. Displays
e. Store Interface

Specific guidance for these is contained in government documents such as AFR 122-10 and MIL-HDBK-255. Paragraphs 8.2.11.1 - 8.2.11.5 below state briefly the relevant requirements.

8.2.11.1 Nuclear S & RE Management

ISSUE: What AIS performance should be specified for the Nuclear S & RE Management?

GUIDANCE: S & RE for nuclear weapons differ in use/implementation from S & RE for other stores in that they implement an in flight reversible lock. This, when unlocked, allows the weapon to be separated by the conventional Eject Signals. When in the locked state, the Eject signals are isolated from the cartridges and the rack is mechanically prevented from releasing the weapon even if both cartridges should fire. The AIS should make the following provisions:

a. Isolate all power from S & RE until start of separation preparations.

b. No single AIS failure should result in separation or should prevent relocking of the S & RE.

c. Control of Eject and In Flight Lock signals should be by two independent mechanisms with physical and electrical isolation of discrete signals.

d. The AIS should not initiate separation even with two "out of sequence" operator errors.

e. The AIS shall prevent jettison of any nuclear weapon in an unsafe condition.

f. The probability of unintentional release should not exceed 1 in 10^6/weapon station design lifetime, 1 in 10^6 abnormal environment exposure when locked, and 1 in 10^3 unlocking events.

8.2.11.2 PAL Code Transfer

ISSUE: What AIS performance should be specified for the PAL Code Management?

GUIDANCE: Permissive Active Link (PAL) codes are used as an authorization function which can interrupt the pre-arming functions of the store. The AIS should provide for crew entry of PAL codes for each weapon carried. Each PAL code is typically a 6 digit code. The AIS must ensure that PAL code data is not retained in the AIS.

8.2.11.3 Nuclear Controls

ISSUE: What AIS performance should be specified for the Nuclear Controls?

GUIDANCE: The AIS should provide the following controls:

a. A wire guarded nuclear release consent switch. Where there are two or more aircrew this shall be at each of two crew stations such that a single crew member cannot operate both switches with effect.

b. A wire guarded nuclear arming consent switch. Where there are two or more aircrew this shall be at each of two crew stations such that a single crew member cannot operate both switches with effect.

c. Numeric entry switches for operator input of unique data codes for prearming and other functions.

8.2.11.4 Nuclear Displays

ISSUE: What AIS performance should be specified for the Nuclear Displays?

GUIDANCE: The AIS should provide the following display information: indication of locked/unlocked status of each S & RE, indication of ability to determine pre-arm status, and indication of each stores pre-arm status.

8.2.11.5 Nuclear Store Interfaces

ISSUE: What AIS performance should be specified for the Nuclear Store Interfaces?

GUIDANCE: The AIS should provide at relevant stations a MIL-STD-1760 compliant interface. For non MIL-STD-1760 stores compliant System 1 interfaces should be provided. These interfaces should be managed to provide:

a. Maximum probability of inadvertent pre-arming should be less than 1 in 10^{10}/ weapon system lifetime.

b. Maximum probability of inadvertent authorization should be less than 1 in 10^5/year/weapon system.

c. Maximum probability of unintentional transmission of "intent" command should be less than 1 in 10^7/year.

8.3 AIS General Performance This paragraph contains subparagraphs 8.3.1 through 8.3.6. These provide performance guidance for the following subjects:

a. Expansion Provision
b. Reliability
c. Maintainability
d. Volume/Mass
e. Environmental Performance
f. Miscellaneous Requirements

8.3.1 Expansion Provision

ISSUE: What AIS performance should be specified for Expansion Provisions?

GUIDANCE: Expansion provisions for the AIS should be limited to provision of extra store stations and extra functional performance at current interfaces. Because all new stores should have MIL-STD-1760 interfaces it is unlikely that additional interface types will be required. The following initial expansion provisions should be specified for the AIS at system, equipment and module level.

a. System
- 50% of installed processing capacity to be unused
- 50% of installed program and data memory to be unused
- 50% of data bus capacity to be unused
- 25% of installed power wiring and connector pin provision to be unused
- 25% of installed high bandwidth wiring and connector pin provision to be unused
- 25% of installed armament network discrete wiring and connector pin provision to be unused
- 10% of all other installed connector pin provisions to be unused

b. Equipment
- 20% of installed module space allocation to be unused in central equipments
- 50% of installed internal data bus capacity to be unused
- 20% of specified maximum power consumption to be unused in central equipments
- predicted estimates of reliability and environmental tolerance to assume 20% increase in internal power dissipation

c. Module
- All program data and code to be reprogrammable

8.3.2 Reliability

ISSUE: What AIS performance should be specified for Reliability?

GUIDANCE: The AIS should provide the following reliability for these parameters:

a. MTBD (Mean Time Between Defects)
b. MTBF (Mean Time Between Failures)
c. MTBCF (Mean Time Between Critical Failures)
d. Damage Tolerance

8.3.2.1 MTBD A defect is defined as any component failure, or Built in Test failure report, regardless of whether or not operational performance is impaired. The MTBD for the AIS should not be less than 250 hours.

8.3.2.2 MTBF A failure is defined as an inability to execute or potentially execute a function. Failures for the AIS exclude failures in redundant inputs, outputs or processing. The MTBF for the AIS should not be less than 1000 hours. Consideration should be given to further specifying that the probability of any failure being present should not exceed 10^{-3} when measured one hour into a mission started 100 hours after the last 100% system test.

8.3.2.3 MTBCF A critical failure is defined for the AIS as a failure that would directly endanger life, health or safety of flight. The MTBCF for the AIS should not be less than 1×10^{7} hours. Consideration should be given to further specifying that the probability of a critical failure having occurred should not exceed 10^{-7} when measured one hour into a mission started 100 hours after the last 100% system test.

8.3.2.4 Damage Tolerance The AIS should provide for tolerance of single defects to:

a. Prevent inadvertent release/jettison
b. As far as possible provide for release of at least one store of all weapon types
c. Provide degraded release capability for all weapons where possible (such as boresight firing in lieu of full targeting before firing)

8.3.3 Maintainability

ISSUE: What AIS performance should be specified for Maintainability?

GUIDANCE: The AIS should provide specific performance for these parameters:

a. Built in Test (BIT) detection
b. BIT isolation
c. BIT execution
d. MTTT Mean Time To Test
e. MTTR Mean Time To Repair
f. Modularity

8.3.3.1 BIT detection The AIS should provide BIT such that at least 95% of all defects arising are detected. This should be specified as a Mean Time Between Undetected Defects which should exceed 5000 hours. Consideration should be given to specifying a Mean Time Between Undetected Critical Defect (component failures, or BIT failure reports, which degrade the instantaneous MTBCF) of 25,000 hours.

8.3.3.2 BIT isolation The AIS should be capable of isolating at least 90% of all defects to a flight line replaceable module. This again should be specified as a Mean Time Between Defects NOT Isolated which should exceed 5000 hours.

8.3.3.3 BIT execution The AIS should provide for three BIT modes. These should be continuous in flight BIT, operator demandable interruptive BIT and Power up BIT. Full defect detection and isolation performance should be achieved following execution of Power Up BIT and in flight continuous BIT. Interruptive BIT should additionally provide for initiation of store BIT.

8.3.3.4 MTTT The AIS should have an on-aircraft MTTT of less than 5 minutes using only BIT facilities.

8.3.3.5 MTTR The AIS should have an on-aircraft MTTR of less than 20 minutes. This should include execution of BIT, removal and replacement of faulty item and retest.

8.3.3.6 Modularity The AIS should maximize the use of common modules used in other avionic systems. This should be achieved by specifying such specific items as CFE or GFE. For necessary unique to AIS units and modules the AIS should provide that:

$$\frac{\text{Total \# of unique units and modules}}{\text{Total \# of unique unit and module types}} \quad \text{exceeds } 2.5$$

This effectively requires that each unique design is used an average of 2.5 times in each AIS.

8.3.4 Volume/Mass

ISSUE: What volume/mass limitations should be specified for the AIS?

GUIDANCE: Specific guidance is difficult to provide for AIS volume and mass because of two factors: the high weight of necessary AIS power wiring relative to typical equipment weights, and the airframe specific nature of volume and space constraints. Typical volume/mass figures can be set as:

a. 1.7 liters (100 in^3) and 1.7Kg (3.8lb) per ASI for equipment local to weapon stations.

b. 12.4 liters (750 in^3) and 12.4Kg (27 lb) for AIS central equipments.

8.3.5 Environmental Requirements

ISSUE: What environmental tolerance should be specified for the AIS?

GUIDANCE: Environmental performance is specific to aircraft as it is derived from considerations of aircraft structure and mission roles. For new implementations the required performance has become markedly more stressing. Environments for integrated rack located modules should be as defined for Pave Pillar (see SPA -90099001A). Typical requirements are listed below for the main categories of environment.

EMC	EMP
Temperature/Altitude	Vibration/Shock
Contamination	

8.3.5.1 EMC

ISSUE: What AIS performance should be specified for the EMC?

GUIDANCE: AIS equipment should comply with MIL-STD-461 Class A1b requirements with RS03 field intensities of typically 100 Volts/meter for internal fuselage mounted equipments and 200 Volts/meter for equipments in external pylons.

8.3.5.2 EMP

ISSUE: What AIS performance should be specified for the EMP?

GUIDANCE: It is extremely difficult to specify EMP performance for the AIS because of the difficulties in absolute testing and of the secure nature of specific data. It is better therefore to specify specific AIS design and test considerations (AIS design is considered in section 9). In determining test requirements, consideration should be given to the form of EMP. This is generally a rapid rise time and short duration field of strength exceeding 10 KVolt/meter. This is shielded by the aircraft structure, but still can produce 1 K Volt spikes on unshielded AIS signal lines. A typical EMP test is, therefore, to inject onto every AIS equipment external signal line a one cycle sinusoidal pulse of amplitude 1000 Volts. This should be repeated for several sinusoidal frequencies (to avoid fortuitous resonant dissipation) between 1 MHz and 20 MHz. The source impedance for the pulse should be typically 10 ohms.

8.3.5.3 Temperature/Altitude

ISSUE: What AIS performance should be specified for the Temperature/Altitude

GUIDANCE: AIS equipment should generally be to MIL-E-5400 Class 2. Equipment mounted adjacent to weapon stations should be to class 3.

8.3.5.4 Vibration/Shock

ISSUE: What AIS performance should be specified for Vibration and Shock?

GUIDANCE: AIS equipments should generally be in accordance with MIL-E-5400 figure 2 curve IVa (10g) sinusoidal vibration. Random vibration performance should be specified individually for each aircraft.

8.3.5.5 Contamination

ISSUE: What AIS performance should be specified for Contamination?

GUIDANCE: The AIS should minimally provide tolerance of contamination as specified in MIL-E-5400.

8.3.6 Miscellaneous

ISSUE: What AIS performance should be specified for the Miscellaneous parameters?

GUIDANCE: It is not possible to meaningfully define specific AIS performance for factors such as Power Dissipation, Power Consumption and other factors because of the specific to aircraft and aircraft location of the real requirements.

8.4 Interfaces As defined in section 7 the AIS has interfaces with the aircraft, the crew and the stores. Although each of these should be clearly specified for the AIS, the relevant crew and stores interfaces have already been specified in paragraph 8.2. This section considers therefore only the aircraft interfaces.

ISSUE: What AIS performance should be specified for the aircraft interfaces.

GUIDANCE: The AIS-to-aircraft interfaces will consist of the areas listed below which are discussed in paragraphs 8.4.1 through 8.4.6.

Power supplies
Discrete Interfaces
Connectors
Digital Interfaces
Analog Interfaces

8.4.1 Power Supplies

ISSUE: What AIS performance should be specified for the aircraft power supplies?

GUIDANCE: The AIS should receive from the aircraft the following power supplies defined in terms of availability, voltage, current fault clearance and interruption characteristics:

a. Availability - 28 Volts primary supply
28 Volts secondary supply
115 Volts 3 phase primary supply
115 Volts 3 phase secondary supply

b. Voltage - Voltages should be as defined in MIL-STD-704 for generation equipment with maximum voltage drop of 0.5 volts.

c. Current - The following continuous currents should be available: 28 Volts (primary and secondary) with 100 Amps per supply; 115 Volts (primary and secondary) with 50 Amps per phase.

d. Fault Clearance - The supplies should have active fault clearing to prevent excessive overcurrents. Performance should be as Table 8-10 for % of maximum continuous current.

TABLE 8-10 Overload Percentages

Duration of Overcurrent	Must Supply	Must Isolate
100 mS	650%	-
1 second	230%	-
10 seconds	130%	400%
100 seconds	100%	250%

e. Interruption - The AIS shall tolerate interruption of any or all supplies for 200 uS with no subsequent effect on AIS function (outputs may be disabled during interruption). The AIS shall retain all inventory data during interruption of any or all supplies for a minimum of 1 second. No power supply interruption may cause any unintended release. No single power supply failure shall prevent separation of stores in Emergency Jettison.

8.4.2 Digital Interfaces

ISSUE: What AIS performance should be specified for the Digital Interfaces with the aircraft?

GUIDANCE: The AIS should interface with the aircraft digital data systems via a redundant interface with a High Speed Data Bus (HSDB). The interface should minimally support the following performance allocation to the AIS:

a. Data Rate of 100 K bit in any one second (peak rate may be higher)
b. Data Update rates to 25 Hz
c. Addressing space of 5100 16 bit data words. These may be "paged" (MIL-STD-1553 supports only 1920 unless "paging" of subaddresses is used)
d. Unique addressing of AIS for up to two AIS redundant HSDB terminals

8.4.3 Discrete Interfaces

ISSUE: What AIS performance should be specified for the Discrete Interfaces with the aircraft?

GUIDANCE: Provided that the critical controls are implemented within the AIS there are required discrete interfaces (Address designation for the HSDB is considered as part of the digital interfaces). Discrete interfaces should be provided for the following data:

a. Engine Disturbance Port
b. Engine Disturbance Starboard
c. Camera Event Marker (to enable recording of events during store separation)

8.4.4 Analog Interfaces

ISSUE: What AIS performance should be specified for the Analog Interfaces with the aircraft?

GUIDANCE: The AIS should provide the following bidirectional analog interfaces with the aircraft:

a. Two redundant 50 ohm 1.6 GHz (specified as MIL-STD-1760 type B)
b. Two 50 ohm 20 MHz (specified as MIL-STD-1760 type A)
c. Two 75 ohm 20 MHz (specified as MIL-STD-1760 type A)
d. Two redundant 78 ohm 1 MHz interfaces (specified as 6dB cut off at 20 Hz and 1 MHz)

Note this can also be used to transfer MIL-STD-1760 LB signals and should be compatible with such transfers.

8.4.5 Connectors

ISSUE: How shall connectors be specified for the AIS - aircraft interfaces?

GUIDANCE: The AIS should provide connectors for the interfaces with aircraft systems as follows:

a. Where possible MIL-C-38999 connectors should be used.
b. Redundant signal interfaces should be implemented in separate connectors.
c. Power signals should be provided in separate connectors.
d. Power should be provided by means of multiple pins per supply. The preferred number is two per supply and return where each pin is capable of supporting the maximum current load.

Note that this guidance does not apply to ASI connectors which are defined in MIL-STD-1760.

9. SYSTEM DESIGN ISSUES AND GUIDANCE

This section describes those issues relevant to the AIS system design activity. The following subparagraphs are included:

Overview of the system design process	9.1
AIS functional partitioning	9.2
AIS internal interfaces	9.3
System design documentation	9.4
An example system included to show the impact of the above guidance	9.5

9.1 Overview of the System Design Process The AIS system designer's role is to design a system of interacting subfunctions that together satisfy the AIS requirements, as defined by the Concept Definition phase, (sections 7 and 8). The essence of system design is the concept of functional partitioning. As shown in Figure 9.1, the designer breaks down a high level complex function into a number of lower level and individually less complex subfunctions then allocates these subfunctions to physical elements, such as LRUs, or modules in an integrated rack. To achieve this the designer must complete the following:

a. Define Subfunctional partitions
b. Define Internal interfaces
c. Generate functional descriptions of elements
d. Define System mechanisms used to implement a 'high level' function

9.2 AIS Functional Partitioning The following functional partitioning issues are considered here:

a. Partitioning viewpoints
b. Partitioning of External functions
c. Partitioning of Internal functions

9.2.1 Partitioning Viewpoints When partitioning the high level functions into subfunctions and physical elements the following viewpoints need to be considered:

a. Are subfunctions to be implemented in central or distributed equipments

b. Are subfunctions to be performed by existing equipments or by new equipments

c. Are subfunctions to be performed by standard elements (such as standard modules for integrated racks) or by specially developed dedicated elements

d. Are subfunctions to be performed by hardware or software

These viewpoints will be used when considering the issues to be discussed but the relative priority of these viewpoints for a particular issue will vary. The major high level functions of the AIS can be divided between those that are visible from outside the AIS and those that are invisible, that is wholly contained within the AIS. The visible functions are referred to as external functions and the invisible functions are referred to as internal functions.

9.2.1.1 External Functions The external functions are those that have been defined in the AIS concept definition process. These functions have to be split into subfunctions and the

subfunctions allocated to elements as shown in Figure 9.1. The key AIS subfunctions to consider in partitioning the external functions are:

- Power Switching
- Analog Network
- Data Formatting
- Avionics Interface *
- Controls *
- Reliability *
- Safety *
- Safety Critical Switching
- AEIS Bus Control
- Existing Store Interfaces *
- Displays *
- Nuclear Control *
- Success *

* These are not Core AIS functions

9.2.1.2 Internal Functions The key AIS internal functions to consider in internal partitioning are listed below and addressed in 9.2.3.

- Decision Processing
- Data Base
- Power Regulation
- BIT
- Internal Interface Management
- Power Distribution

9.2.2 Partitioning of External Functions As defined earlier an 'external' function is a definable function of the AIS. These are therefore the same functions as considered in paragraphs 7 and 8. Sub paragraphs 9.2.2.1 through 9.2.2.17 provide partitioning guidance for the functions considered in 8.2.1. through 8.2.11 and 8.3.1 through 8.3.6.

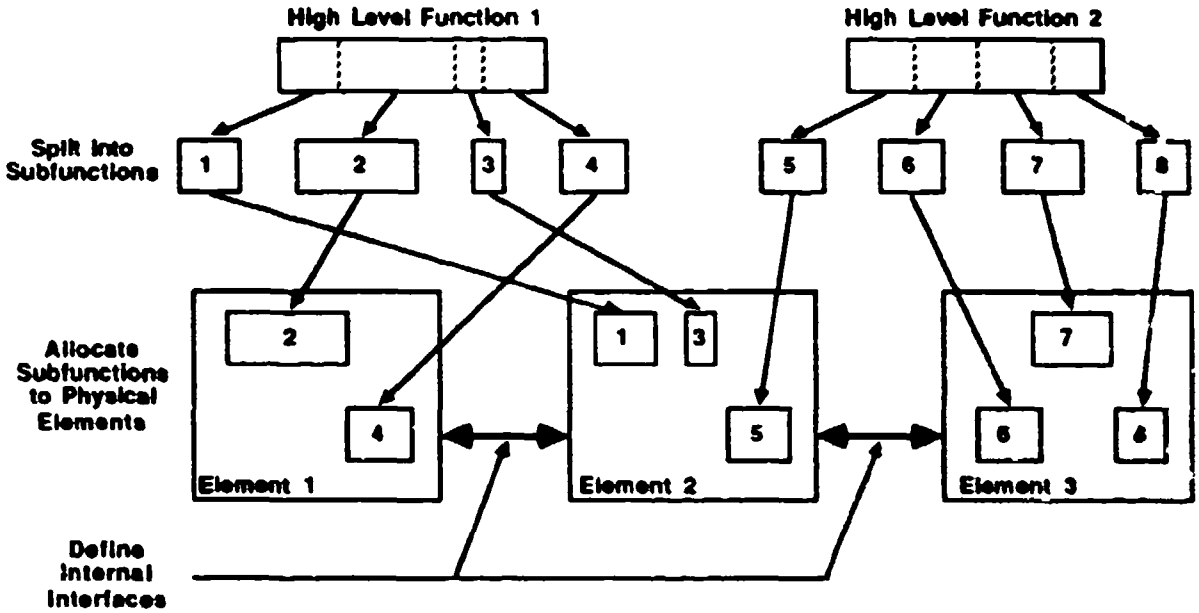

FIGURE 9.1 Functional Partitioning

9.2.2.1 Store Interface The main subfunctions of store interfaces, identified earlier as being located in the AIS, are MIL-STD-1760 ASI and non-AEIS signals. The partitioning of functions within the AIS to provide the non-AEIS signals is very dependent on individual aircraft requirements and so no particular guidance is offered for this area. The MIL-STD-1760 ASI signals can be divided into eight categories which are listed below. The following paragraphs give general guidance of how these signals can be partitioned within the AIS.

- High Bandwidth signals
- Low Bandwidth signals
- Interlock
- Address Discretes
- MUX Buses
- Release Consent
- Structure Ground
- Power

9.2.2.1.1 High Bandwidth Signals

ISSUE: How should the High Bandwidth network function be partitioned within the AIS?

GUIDANCE: The switching of the High Bandwidth signals and associated networks is recommended to be provided centrally within the AIS. In a retrofit situation existing equipments may provide some form of networking but this would probably need modifications to meet all the requirements of MIL-STD-1760.

9.2.2.1.2 MUX Buses

ISSUE: How should the Mux Bus and its control be partitioned within the AIS?

GUIDANCE: The provision of the bus control function for the MIL-STD-1553 Mux buses is recommended to be provided centrally within the AIS. In a retrofit situation this function would probably not currently exist and would have to be provided by new equipment.

9.2.2.1.3 Low Bandwidth

ISSUE: How should the Low Bandwidth network function be partitioned within the AIS?

GUIDANCE: It is recommended that this be treated in the same way as the High Bandwidth signals and therefore this function should be provided centrally within the AIS. For retrofit situations this function could probably be incorporated into existing equipments.

9.2.2.1.4 Release Consent

ISSUE: How should the Release Consent control function be partitioned within the AIS?

GUIDANCE: This function should be distributed within the AIS as switching of this safety critical signal should be as close to the ASI as possible to reduce the effects of electromagnetic pick up on the wiring to the ASI. For retrofit situations this function could probably be incorporated into existing equipments.

9.2.2.1.5 Interlock

ISSUE: How should the interlock monitoring function be partitioned within the AIS?

GUIDANCE: This function should be distributed within the AIS to reduce aircraft wiring by providing monitors within the local store station equipments and transmitting the result to process control equipment(s) on the internal AIS Bus. For retrofit situations this function could probably be incorporated into existing equipments.

9.2.2.1.6 Structure Ground

ISSUE: How should the Structure Ground function be partitioned within the AIS?

GUIDANCE: This function should be distributed, because the bonding to the aircraft structure should be made as close to the ASI as possible. Additional bonding points would probably need to be provided to incorporate this in a retrofit situation.

9.2.2.1.7 Address Discretes

ISSUE: How should the Address Determination function be partitioned within the AIS?

GUIDANCE: This function should be distributed within the AIS to reduce aircraft wiring (see 10.1.4.3). In a retrofit situation this function would require new equipment to provide the necessary shorting links.

9.2.2.1.8 Power

ISSUE: How should the Power control function be partitioned within the AIS?

GUIDANCE: Wherever possible this function should be distributed but some of the power switching may be provided centrally if necessary (see 10.1.5). In a retrofit situation, power switching is probably already provided but the fault isolation elements would have to be changed if they did not conform to the requirements of MIL-STD-1760.

9.2.2.2 Store Critical State

ISSUE: How should the store critical state function, identified in 7.4.2 and 8.2.2, be partitioned within the AIS?

GUIDANCE: All of the three AIS subfunctions of the store critical state function identified earlier, namely state command, state monitor and power supply management are considered as central functions within the AIS. For MIL-STD-1760A stores the primary method of critical state control is via the Mux bus using the critical control and authority words. The requirements of the standard necessitate the use of a high integrity bus controller, which in a retrofit situation is unlikely to be available. This bus controller would therefore have to be provided within new equipment.

9.2.2.3 Data to Store

ISSUE: How should the relevant Data to Store functions, identified in 7.4.3 and 8.2.3, be partitioned within the AIS?

GUIDANCE: The three AIS subfunctions of the Data to Store function identified earlier, that is unique to store formatting, recomputation to store axes, and interface with store, should be performed centrally within the AIS. The standard defines the interface to the store for data transfer, that is the Mux bus, and also defines the data formats to be used on the bus. The AIS would require processing power for the data formatting and a bus controller to either transmit or control the transmission of the data to the store. In a retrofit situation an existing processor may be able to perform the data formatting but the bus controller would probably not exist and so would have to be added as new equipment.

9.2.2.4 Data from Store

ISSUE: How should the relevant Data from Store functions, identified in 7.4.4 and 8.2.4, be partitioned within the AIS?

GUIDANCE: The three AIS subfunctions of Data from Store identified earlier, that is unique to user formatting, recomputation to user axes, and interface with avionics, should be performed centrally within the AIS. The standard defines the interface to the AIS for data transfer, that is the mux bus, and also defines the data formats to be used on the bus. The AIS would require processing power to reformat the store data for use by the avionics and a bus controller to either receive or control the reception of the data from the store. In a retrofit situation an existing processor may be able to perform the data formatting but the bus controller would probably not exist and so would have to be added as new equipment.

9.2.2.5 Store Selection

ISSUE: How should the relevant Store Selection functions, identified in 7.4.5 and 8.2.5, be partitioned within the AIS?

GUIDANCE: The three AIS subfunctions of Store Selection identified earlier, that is station determination, store initialization management, and weapon package retention, are all dependent on particular aircraft and store implementations, but should be implemented centrally. This function is not affected by MIL-STD-1760.

9.2.2.6 Store Fuzing

ISSUE: How should the relevant Store Fuzing functions, identified in 7.4.6 and 8.2.6, be partitioned within the AIS?

GUIDANCE: Both the AIS subfunctions of Store Fuzing identified earlier, that is fuzing management and fuzing times computation, are dependent on particular aircraft and store implementations but should be implemented centrally. This function is not affected by MIL-STD-1760.

9.2.2.7 Store Release

ISSUE: How should the relevant Store Release functions, identified in 7.4.7 and 8.2.7, be partitioned within the AIS?

GUIDANCE: The eight AIS subfunctions of Store Release identified earlier, that is Suspension Equipment Management, Weapon Bay Management, Release Management, Release Timing, Release Sequence Determination, Balance Management, and Engine Control Assistance, are all dependent on particular aircraft and store implementations, but should be implemented centrally. This function is not affected by MIL-STD-1760.

9.2.2.8 Store Jettison

ISSUE: How should the relevant Store Jettison functions, identified in 7.4.8 and 8.2.8, be partitioned within the AIS?

GUIDANCE: The three AIS subfunctions of Store Jettison identified earlier, that is Selective Jettison Management, Emergency Jettison Management, and Store Safe Verification, are all dependent on particular aircraft and store implementations but should be implemented centrally. This function is not affected by MIL-STD-1760.

9.2.2.9 Inventory

ISSUE: How should the relevant Inventory functions, identified in 7.4.9 and 8.2.9, be partitioned within the AIS?

GUIDANCE: Both AIS subfunctions of Inventory identified earlier, that is Inventory Confirmation and Inventory Update in Mission, should be implemented centrally. The store description pages defined in MIL-STD-1760 could be used during Inventory confirmation. This store identification information could be transferred from the stores, using the MIL-STD-1553 stores bus, to the central control equipments to confirm the correct store is present at each ASI.

9.2.2.10 Crew Interface

ISSUE: How should the relevant Crew Interface functions, identified in 7.4.10 and 8.2.10, be partitioned within the AIS?

GUIDANCE: The critical controls interface, identified earlier as the only AIS subfunction of Crew Interface, should be distributed. The actual interfaces included are dependent on the particular aircraft implementation, but they form a key part of the safety critical control function of the AIS. The monitoring of these interfaces should be performed centrally. This function is not affected by MIL-STD-1760.

9.2.2.11 Nuclear Controls

ISSUE: How should the relevant Nuclear Control functions, identified in 7.4.11 and 8.2.11, be partitioned within the AIS?

GUIDANCE: The three AIS subfunctions of Nuclear Control identified earlier, that is S & RE Management, Crew Controls and Crew Displays, should be performed centrally within the AIS. Their functions will be dependent on particular aircraft implementations and not affected by MIL-STD-1760. Note that two subaddresses, 19 and 27, are reserved in MIL-STD-1760 for communications with Nuclear Stores.

9.2.2.12 Expansion Provision Three issues are discussed here: Memory, Processing, and Interfaces.

9.2.2.12.1 Memory

ISSUE: Where should memory expansion capabilities be provided within the AIS?

GUIDANCE: Memory expansion for the AIS needs to be provided centrally within the units associated with system control and management.

9.2.2.12.2 Processing

ISSUE: Where should spare processing capacity be provided within the AIS?

GUIDANCE: Spare processing capacity needs to be provided centrally for the AIS within the units associated with system control and management.

9.2.2.12.3 Interfaces

ISSUE: Where should the capability for additional store interfaces be provided within the AIS?

GUIDANCE: The design of the system as a whole should accommodate the addition of extra MIL-STD-1760 store interfaces with minimal hardware or software changes. This could be achieved by allowing additional ASIs and their associated Store Station Equipments to be added with minimum effect on the existing equipments. Consideration should be given to:

a. Providing spare remote terminal addresses on the stores and/or armaments buses to accommodate additional equipments and interfaces

b. Providing expansion capability for the internal AIS discrete and power interfaces to accommodate additional equipments

c. Providing modular software which can easily accommodate the addition of extra equipments and interfaces

9.2.2.13 Reliability

ISSUE: How should the reliability of the system be partitioned within the AIS?

GUIDANCE: The reliability figures in terms of MTBF, MTBCF and MTBD can be apportioned between the different units within the system to give budgets for the individual LRU designers to work with. An example of this partitioning for MTBF and MTBD is shown in Figure 9.2 for a simple eight station system with a high level of standby redundant circuitry.

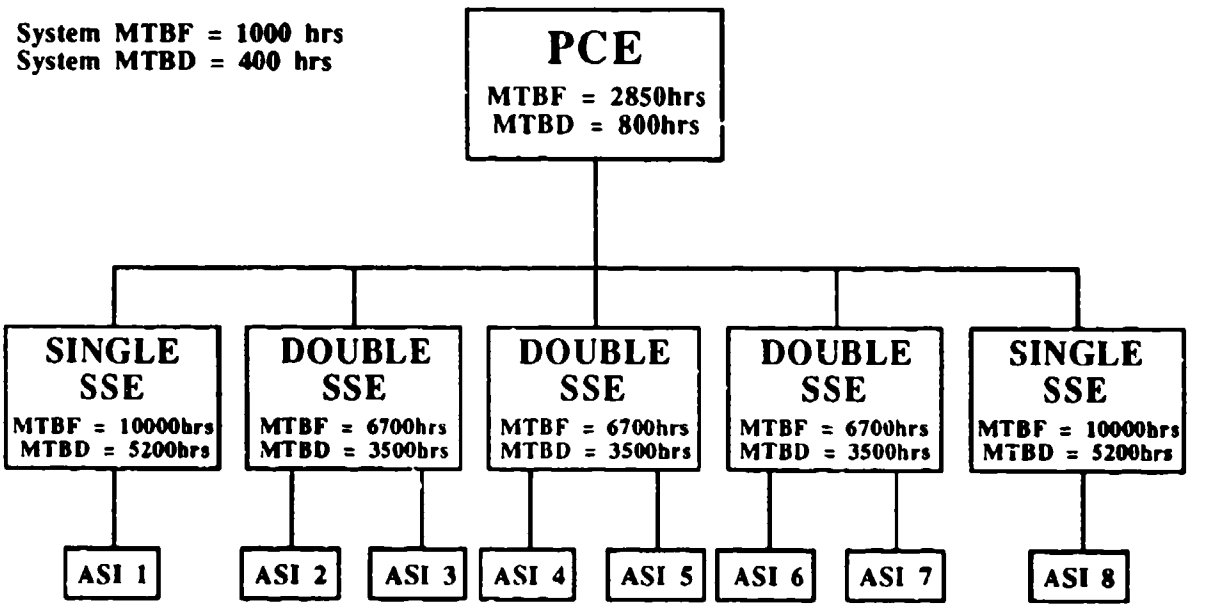

FIGURE 9.2 Typical System Reliability Breakdown

9.2.2.14 Maintainability

ISSUE: How should the maintainability requirements of the system be partitioned within the AIS?

GUIDANCE: The main partitioning associated with maintainability that can be achieved is for the Built in Test (BIT) function. The control of the BIT function should be located in the central processing and control equipment. Dedicated monitoring circuitry for self testing should be distributed throughout the system to allow the central processing and control equipment to check that demands have been correctly implemented and the system is in the correct state. Any failures identified should be recorded in BIT result storage facilities within the failed unit.

9.2.2.15 Volume/Mass

ISSUE: What guidance can be given for the partitioning of volume and mass within the AIS?

GUIDANCE: No specific guidance is offered in this area as it is dependent on the position and space available for the various equipments on a particular aircraft.

9.2.2.16 Environmental

ISSUE: What guidance can be given for the effects of environment on the partitioning within the AIS?

GUIDANCE: No specific guidance is given here as this has previously been discussed in 8.3.5.

9.2.2.17 Miscellaneous

9.2.2.17.1 Power Dissipation

ISSUE: What guidance can be given for the effects of power dissipation on the partitioning within the AIS?

GUIDANCE: No specific guidance is offered in this area as the power dissipation for an individual equipment is limited by its position and the environmental conditions of a particular aircraft. The potential availability of blown air or liquid cooling should be considered to enhance the MTBF figures. However, these will probably not be available outside of the fuselage section of the aircraft.

9.2.2.17.2 Power Consumption

ISSUE: What guidance can be given for the effects of power consumption on the partitioning within the AIS?

GUIDANCE: Power consumption of the equipments within the system should be considered negligible compared with the possible power requirements of MIL-STD-1760 stores, that is 2 KW for Primary connector and 6 KW for Auxiliary Connector.

9.2.3 Partitioning of Internal Functions

ISSUE: How should the AIS system designer implement internal functions?

GUIDANCE: As defined earlier an internal function is not a true function of the AIS but is a clearly identifiable function of the probable AIS design. Internal functions considered in 9.2.3.1 through 9.2.3.6 include Decision Processing, BIT, Data Base, Internal, Interface Management, Power Regulation and Power Distribution. As these are not core AIS functions only brief guidance is given.

9.2.3.1 Decision Processing Decision processing is that processing which changes the execution of repetitive processes. As an example target data may be computed and transferred over a fixed path at a rate of 10 Hz. There may be a number of conditions which require that rate to be increased to 20 Hz. This change cannot be executed unilaterally by the target data computation and a decision has to be made to increase the rate. It is such decisions that are effected by decision processing. They form the highest levels of processing in the AIS. For the AIS typical decision processing required is determination of store states, definition of data paths, and determination of S&RE states. The input data to these functions is derived from many dispersed sources and must either be brought together at one central point or communicated to equipment local to the actions required. Clearly the latter alternative requires more data transfers, more processing and greater memory requirements. For these reasons decision processing should be executed centrally by AIS software elements.

9.2.3.2 BIT This function has already been discussed under maintainability in paragraph 9.2.2.14.

9.2.3.3 Data Base This function should be performed centrally as it supports the decision processing function which is recommended as a centralized function. The data base content is discussed in paragraphs 8 and 11.

9.2.3.4 Internal Interface Management There are clearly many internal interfaces within the AIS. The most important of these are the highest level internal interfaces that communicate between the highest level system components. As has been considered earlier in paragraph 9.2.2, there will have to be several physically separate equipments in the AIS to reduce wiring weights and provide safety against EMI hazards. The internal interfaces considered here are therefore the communication links between those equipments. The management should be performed centrally within the AIS as a distributed internal interface management would:

a. Complicate the system
b. Make it more difficult to predict the safety and reliability of the system
c. Increase system cost and weight
d. Degrade performance

9.2.3.5 Power Regulation Power regulation (the conversion from aircraft supplies to power supplies used by AIS electronic circuitry) should be distributed to each AIS equipment for several reasons:

a. It avoids an excessive power dissipation burden appearing in any one equipment.
b. It provides for greater fault tolerance.
c. It provides higher EMC performance (both susceptibility and emission).
d. A centralized system would inevitably still require local regulation of part regulated central power sources (such as 7 volts locally regulated to 5 volts). This will increase the total power dissipation and equipment cost and weight.

9.2.3.6 Power Distribution This function should be performed from a central unit to allow the central decision processing function to more easily monitor and control the state of the power within the whole system. This will also simplify the aircraft wiring as only single points of connection and fault clearance will be needed between aircraft power and the AIS.

9.3 AIS Internal Interfaces

ISSUE: How should the AIS system designer address specification of internal interfaces?

GUIDANCE: The AIS system designer must design and define all the internal interfaces between elements. These interfaces in total usually exceed the external interfaces. As defined in 9.2.3.4 the most important internal interfaces are those between the separate AIS equipments. The Guidance provided here is in general brief because the internal AIS interfaces are dominated by factors other than MIL-STD-1760. These other factors include the existing systems retained (if a retrofit) or the avionic philosophies such as Pave Pillar, if a new program. Issues to be considered in defining interfaces include:

- Connectors and Cabling
- Digital Interfaces
- Analog Signals
- Power Interfaces
- Discrete Interfaces

9.3.1 Connectors and Cabling

ISSUE: How should the AIS system designer specify cables and connectors?

GUIDANCE:
9.3.1.1 Analog and Mux Bus It is recommended that, whenever possible, separate connectors be used for the following signals to ensure adequate screening of these signals is maintained:

a. MUX Bus A
b. MUX Bus B
c. High Bandwidth 1 and associated internal networks
d. High Bandwidth 2 and associated internal networks
e. High Bandwidth 3 and associated internal networks
f. High Bandwidth 4 and associated internal networks
g. Low Bandwidth

Space limitations may prevent this so as a minimum all the above signals should have separate Triaxial or Coaxial contacts.

9.3.1.2 Power Wherever possible high current signals and low current signals should be routed through separate connectors to reduce conducted interference onto signal lines from switching of high currents on other lines. The sizes of cable and connector contacts used for routing power signals should be the largest that are practical to reduce the voltage drops through the AIS. As MIL-STD-1760 requires the use of size 10 and 16 contacts, these will be the default sizes in the AIS equipment connectors. If excessive voltage drops occur within the AIS wiring it will be very difficult to comply with the power interface requirements of MIL-STD-1760. Wherever possible the power wiring should be routed separately and pass through connectors which do not carry other types of signals. This should reduce interference on other signals caused by current or voltage changes on the power lines.

9.3.1.3 Connector Ranges The preferred connector type is MIL-C-38999 series III. MIL-C-38999 connectors are required (by AFR-122-10) for most connections for any nuclear certified AIS, and their high reliability and "chatter proof" performance offer system performance benefits. The series III connectors feature a 'scoop proof' threaded lock design which provides benefits in both mating and security of connection, as well as providing a high level of protection against EMC.

9.3.2 Power Interfaces

ISSUE: How should the AIS system designer specify power interfaces?

GUIDANCE: The external power interfaces are specified in paragraph 8.4.1 and MIL-STD-1760. In specifying the internal power interfaces the AIS designer needs to consider how the voltage drops (from the aircraft power supplied to the ASI) will be partitioned throughout the AIS. Once this has been completed the system designer can specify for each AIS equipment the voltage, current, fault isolation and power interrupt characteristics.

9.3.3 Digital Interfaces

ISSUE: How should the designer specify the use of digital transmission in the AIS?

GUIDANCE:

9.3.3.1 Digital transfer standards selection It is recommended that a MIL-STD-1553 dual redundant data bus be used for internal AIS digital data transfer. The AIS is already committed to provide MIL-STD-1553 interfaces to the ASI and so it would simplify the design of the AIS if the same method of digital data transfer is used internally. Other digital transfer standards that may be relevant are the PI-Bus (a 16 bit parallel bus intended for communication between standard modules in integrated racks) and the High Speed Data Bus (a standard bus still in definition which will provide data rates and capacities of at least an order of magnitude higher than MIL-STD-1553). These standards are applicable to the AIS but only for inter module communication and interfacing with the avionics data centers.

9.3.3.2 Consolidation with other buses It is recommended that the same bus is used for both the MIL-STD-1760 mux bus and the internal AIS/SMS bus. A single dual redundant bus should be adequate to support the bus traffic requirements of the stores and the SMS and the single dual redundant bus would reduce the aircraft wiring and Bus Control requirements. A limiting factor, especially on larger systems, may be that the number of Remote Terminal addresses required internally to the SMS and for all the store stations exceeds the number of addresses available on a single bus (31). Other limiting factors to consider may be the electrical performance of the bus and the data capacity, if a large number of stores are to be simultaneously targeted. In these cases two or more separate dual redundant buses may be provided. Where two or more dual redundant buses are implemented, the first partitioning of these buses should be to separate MIL-STD-1760 and SMS (including existing store data) transfers. Should further partitioning be required to three or more dual redundant buses, then the design should avoid 'vertical' partitioning of buses (where data is routed through levels of data buses) and instead incorporate two or more AIS Bus Controllers in the same central equipment. These should be allocated not to port and starboard ASI but instead to an equal mix of port/starboard and forward/rear stations.

9.3.3.3 Protocol and data formats It is recommended that where applicable the internal AIS data formats are the same as the data formats defined in MIL-STD-1760. Similarly it is recommended that where applicable the AIS uses the protocol defined in MIL-STD-1760. This should simplify the system control software within the AIS as the same data formats and protocols will be used for all transfers on this MIL-STD-1553 bus.

9.3.4 Discrete Interfaces

ISSUE: How should the designer specify the use of discrete signals.

GUIDANCE: The use of discrete signals is recommended to provide direct safety interlocks (safeguards) on critical signals. This is almost essential for the Release Consent signal which is recommended be interlocked with selection of Trigger/Weapon Release. It is recommended that only the Master Arm interlock is protected by discrete signaling within the AIS. Other signals internal to the AIS may need similar interlocks such as the safety critical signals for the S & RE.

Lastly if the AIS also implements the SMS function there will have to be a high integrity implementation of Emergency Jettison. This will require that even with the MIL-STD-1760 data bus failed, then stores will still be separated. This is recommended to be implemented by use of backup discrete signals. In summary, to each remote AIS equipment the following signals should be transferred in discrete form: Arming/Jettison enable, Release A and Release B enable, and Emergency Jettison demand.

9.3.5. Analog Signals

ISSUE: How should the designer specify the use of AIS internal analog signals?

GUIDANCE: MIL-STD-1760 requires analog networks to be provided for the following signals:

- High Bandwidth 1 (20Hz to 1.6GHz)
- High Bandwidth 2 (20Hz to 20MHz)
- High Bandwidth 3 (20Hz to 20MHz)
- High Bandwidth 4 (20Hz to 20MHz)
- Low Bandwidth (DC to 50KHz)

The AIS, in providing the network performance required by paragraph 8.2.3.5.1, must implement internal analog interfaces as these signals are beyond the data capacity of any known digital link. As discussed in paragraph 9.2.2.1.1 these signals should be networked centrally and therefore the AIS Interfaces should have essentially the same signal specifications as in MIL-STD-1760A.

9.4 System Design Documentation It is important that the system design is properly recorded in documentation usable by experts other than the initial system design team. MIL-STD-490 identifies document outlines suitable for this purpose.

ISSUE: How should MIL-STD-490 be used to record the system design?

GUIDANCE: MIL-STD-490 identifies many different specification types and provides outlines for each with detailed instructions for text style, wording and presentation. Later issues of MIL-STD-490 allow greater flexibility for use of contractor format documentation. The suggested use of MIL-STD-490 is shown in figure 9-3. This requires the use of 9 types of specification A, B1, B2, B3, B5, C1b, C2b, C3, and C5. Their use is briefly explained below. Two basic principles should always be applied in their use:

a. A "Top Down" design should be employed. The design should not commence until an adequate definition of requirements has been determined.

b. Requirements and Design should be separated. This allows for effective design review.

9.4.1 Type A - System Specification This document should be used during the concept definition phase (see paragraph 7) to collect in one document the functional requirements of the AIS. The Type A specification should contain information on the missions supported and how the AIS should function through those missions. The Type A specification may be used to describe the whole aircraft avionics in which case the AIS functions will constitute a section. The Type A specification may not be continually updated throughout the AIS development and constitutes an initial direction statement. No development work should be specified by the Type A specification.

9.4.2 Type B1 Prime Item Development Specification This document should be used to define the specific performance and design requirements of the AIS. The data for this document will come from the work described in paragraphs 7 and 8. Content of the B1 specification should

include those items listed below. If convenient the B1 specification can be combined with the AIS C1b specification as parts I and II of the same volume.

- AIS functions
- AIS functional performance
- AIS external interfaces
- Definition of existing equipment performance and interfaces where these are to be retained
- Design constraints (standards etc)
- Testing requirements

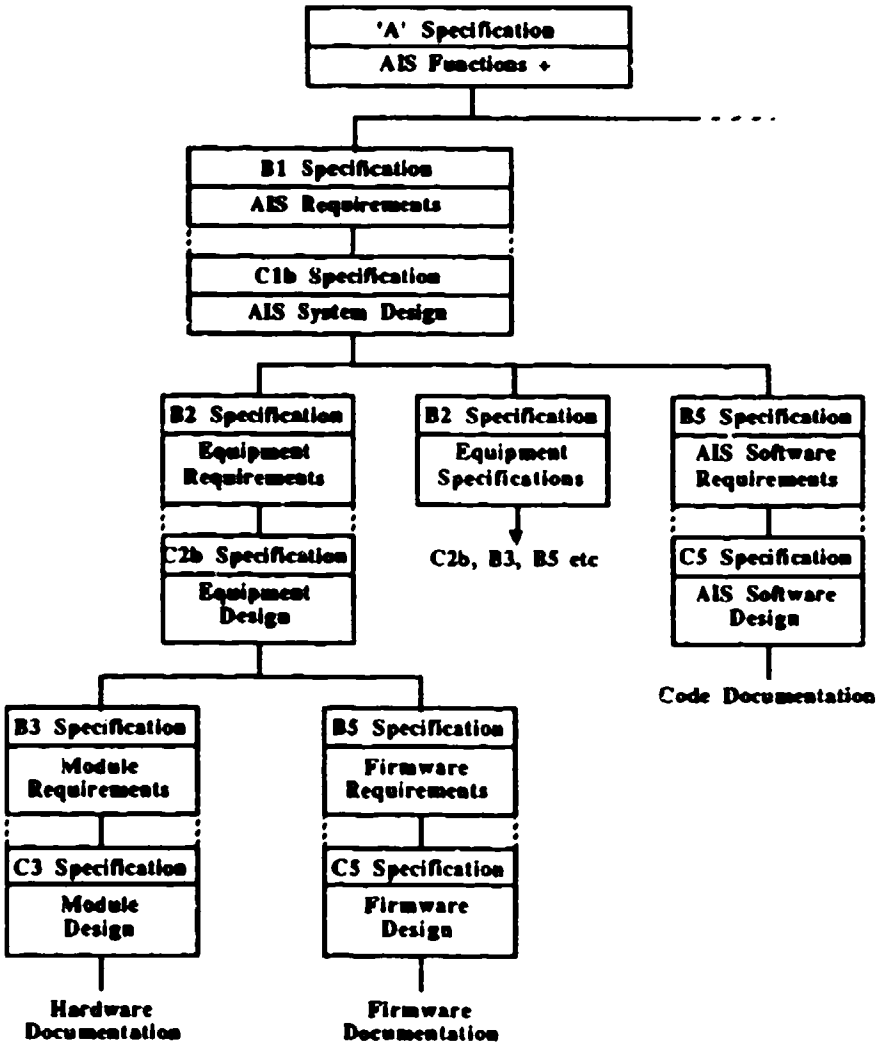

FIGURE 9.3 AIS and MIL-STD-490

9.4.3 Type B2 Critical Item Specification These documents should be used for each new or modified existing equipment of the AIS to determine the equipment specific performance. Content subjects are therefore similar to the type B1 specification. For the system described in paragraph 9.5, type B2 specifications would be required for the PCE and SSEs.

9.4.4 Type B3 Non-Complex Item Development Specification These documents should be generated for every removable module to be developed or modified for the AIS. Content subjects are therefore similar to the Type B1 specification but are addressed at a lower level.

9.4.5 Type B5 Computer Program Development Specification These documents should be generated for every separate software package to be developed for the AIS. These will be broadly of two types: application software and equipment firmware. The content of the B5 specification may overlap significantly with documentation required by DOD-STD-2167 and therefore such documentation may be used in lieu of a B5 specification. Subject area for inclusion in the B5 specification (or its equivalent) should include:

- Software functions
- Inputs
- Testing requirements
- Software performance (rates, accuracies)
- Outputs
- Processing Limitations (ips, memory etc)

9.4.6 Type C1b Prime Item Product Fabrication Specification This document should be developed in response to the type B1 specification. As such the contents are similar but with the emphasis on design and performance achieved. In documenting the design the C1b specification provides for design review against B1 specification requirements and also control of interchangeability. To achieve the latter cross reference has to be made to specific production drawings or the B2 specifications of the AIS equipments. Content therefore includes:

a. AIS functions
b. AIS performance
c. AIS interfaces
d. Definition of design by use of functional explanations of how AIS equipments and software achieve each AIS function (System Mechanisms)

The C1b specification will progressively take precedence over the B1 specification as development progresses.

9.4.7 Type C2 Critical Item Product Function Specification These correspond to the B2 specifications as the C1b corresponds to the B1 specification.

9.4.8 Type C3 Non Complex Item Product Fabrication Specification These correspond to the B3 specifications as the C1b corresponds to the B1 specification. Note however that much testing here will be by inspection and demonstration.

9.4.9 Type C5 Computer Program Product Specifications These correspond to the B5 specifications in a similar manner to the C1b - B1 relationship. C5 specifications will be dominated by DOD-STD-2167 requirements.

9.5 An Example System This example system is included to show the impact of the guidance given previously for the design of an example AIS. For the purposes of this example the following assumptions have been made:

a. The System is applicable to differing aircraft applications.
b. Aircraft avionics architecture is based on "Pave Pillar" concepts.
c. The system is applicable to new aircraft only (not compromised by retrofit consideration).
d. No nuclear considerations in basic design.
e. Previous guidance of sections 7 and 8 observed.

The general form of the example design is shown in figure 9.4 as a system diagram. The functions of the AIS have been implemented with the SMS function and are partitioned between five equipment types:

- Bulk Memory
- Critical Controls
- Fuselage Store Station Equipments
- Process Control Equipments (PCE)
- Remote Store Station Equipments

These are interconnected via a High Speed Data Bus (HSDB) and an Armament Network. These system components and interfaces are described below.

9.5.1 Bulk Memory This is a central bulk memory device and is based on the Pave Pillar concepts. It is used to retain software and data files for the AIS and other aircraft systems. When required, software and data relevant to the AIS are "downloaded" to the AIS processors using the High Speed Data Bus. Software for the AIS is separated into two distinct parts. These are referred to as Safety Critical and non Safety Critical software. These parts can be separately and independently compiled and are so partitioned to enable the end user to request non Safety Critical software changes without requiring a full repeat of software safety analysis. The data files for the AIS contain the information on store loadouts. In addition data files on Targets and Trajectories will probably be included to enable the AIS to transfer this information to stores when relevant.

9.5.2 Process Control Equipments(PCE) Two Process Control Equipments are implemented and provide the following functions:

a. Control of the Armament Network
b. Decision processing for SMS and AIS functions including critical controls
c. Formatting of data for stores and other avionics systems
d. Recomputation of data to or from stores
e. Interface to avionics data

The PCE are centrally mounted units and are of an integrated rack form. This means that they may have no distinct physical boundary although electrically they are highly independent of other avionics. One of the PCE is in a back-up standby mode to maintain the PCE function should a failure occur in the primary PCE. For safety reasons each implements its own Power Supply and PI-Bus backplane. With one exception, all of the modules which makes up a PCE are standard modules with part number commonalty with other avionics system modules. The exception is a module which provides dedicated safety critical discrete interfaces to the Critical Controls and the Armament Network.

9.5.3 Critical Controls The Critical Controls are realized as discrete switches principally located on the aircrew throttle and stick. Other controls are less accessible but still located in the cockpit. They are directly wired to the AIS. The Critical Controls implemented for the pilot, and if relevant the navigator, are: Air to Air and Air to Ground Weapon Release controls, Master Arm, and Selective and Emergency Jettison Controls. Other Critical Controls which are implemented include those for gear up and locked and ground test override.

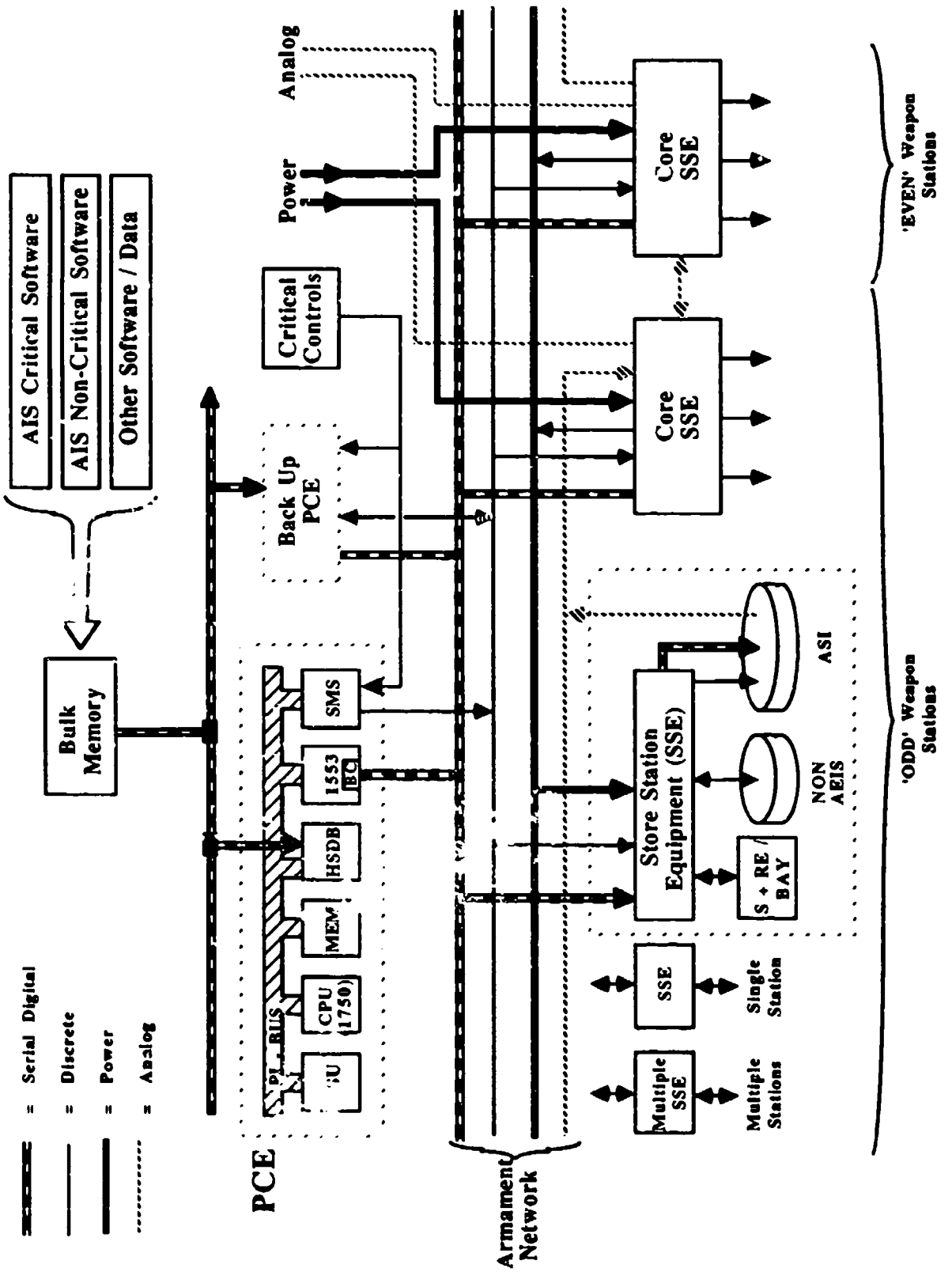

FIGURE 9.4 Example Form of AIS

9.5.4 Store Station Equipment (SSE) To reduce the hazards of long signal lines connecting to safety critical devices, and to reduce wiring in general, Store Station Equipments (SSE) are implemented. There are two main categories of SSE referenced to as "remote" and "core" SSE.

9.5.4.1 Remote Store Station Equipment The remote SSE are units controlled by the Armament Network and located near to the weapon stations. Where two or more weapon stations are in close proximity the SSE can be of multiple station capability. Two criteria are used to determine whether a station will be implemented by adding capacity to a multiple SSE or by adding a new SSE:

a. If an SSE is located in a removable structure then it must only control those stations within the same removable structure

b. If the use of multiple SSE means that the weapon station wiring is excessively long, such that it becomes susceptible to electromagnetic interference, then separate SSE are required

The remote SSE provide the following functions:

a. Interface to S & RE
b. Interface to Weapon Bay control signals (such as bay door opening)
c. Interface to the following MIL-STD-1760 signals: Data Bus, Power, Release Consent, and Interlock
d. Dedicated Interfaces to existing stores (such as HARM and Maverick)
e. Discrete signals generic to many existing stores (28 volt/0 volt inputs and outputs)

9.5.4.2 Core Store Station Equipment Two SSE located in the "fuselage" area of the aircraft are designated as Core SSE. Their location must be as protected as possible to improve the reliability of the system. They must be fitted in all aircraft configurations. The core SSE implement identical functions to the remote SSE with the following additions:

a. Analog Network for MIL-STD-1760 High Bandwidth and Low Bandwidth signals
b. Power Distribution to other AIS equipments
c. Sidewinder guidance signals distributed using Analog Network

Each core SSE provides these functions for one of two groups of weapon stations. All of the weapon stations are determined as odd or even (usually by alternatively allocating SSE as "odd" or "even" progressing left to right front to back across the aircraft). This ensures that should one fuselage SSE fail then, assuming a laterally symmetrical loadout, full weapon type capability will be provided with only the numbers of available stores reduced. To provide further redundancy both core SSE provide power to each remote SSE.

9.5.5 High Speed Data Bus As described above the AIS receives software and loadout data by interface to an avionics HSDB. This bus is additionally used to transfer the following data:

a. Aircraft Data (positions, time etc.)
b. Aircraft and Store Target Data (as may be required for MIL-STD-1760 stores)
c. Target, Trajectory and Threat Data (as may be required for MIL-STD-1760 stores)
d. Non-critical Crew Control and Display Data

9.5.6 Armament Network To provide a link between the AIS equipments a high integrity Armament Network is implemented. This includes the following:

a. Data Bus - Providing a MIL-STD-1553 data bus with stubs to the Store Station Equipments. Stubs for the ASI are routed through the SSE to enable ASI isolation to be implemented. This data bus conveys the majority of data (critical and non-critical) through the AIS.

b. Discrete signals - Providing the discrete signals defined in paragraph 9.3.4.

c. Power signals - Dual redundant 28 Volts and non-redundant 115 Volts three phase distributed from the core SSE to the other SSE to be used by the remote SSE for switching to their local ASIs and for internal power.

d. Analog - Direct connection of ASI High Bandwidth and Low Bandwidth signals from the weapon stations to the core SSE.

10. HARDWARE DESIGN ISSUES AND GUIDANCE

This section describes those issues relevant to hardware and equipment design of the AIS. Particular emphasis is placed on MIL-STD-1760 implementation. The following subparagraphs are included:

MIL-STD-1760A Implementation Guidance	10.1
Detailed Guidance on specific design issues	10.2

10.1 MIL-STD-1760A Implementation Guidance For the purposes of this paragraph, MIL-STD-1760A is limited to the April 1985 Draft as modified by pages 19 through 52a of June 1985 Draft Notice 1. In practice discussions and guidance relate to the Sept 1985 issue of MIL-STD-1760A plus Notices 2 and 3. Paragraphs of this section address the following subjects:

High Bandwidth issues	MIL-STD-1553 issues
Low Bandwidth issues	Discrete Signal issues
Power issues	Auxiliary Signal set issues
Connector issues	Reserved provisions issues

10.1.1 High Bandwidth Issues The following issues are considered: High Bandwidth network and Switching Elements.

10.1.1.1 High Bandwidth Network This is broken into three further issues: Centralized or Distributed, Switched or FDM Technology, and Shared Usage (LB, 1553 or other signals).

10.1.1.1.1 Centralized or distributed

ISSUE: Should the High Bandwidth Network be centralized or distributed?

GUIDANCE: In general a centralized system, as shown in Figure. 10.1.A, is recommended. The major factors to be considered when deciding what type of network to implement are:

a. VSWR The VSWR requirements stated in MIL-STD-1760 of 1.75 maximum for all ASI-ASI signal paths is quite stressing. In a distributed system, as shown in figure 10.1, the number of switch elements and connectors in some ASI-ASI signal paths can be very large making it difficult to guarantee meeting the VSWR requirements. In a centralized system, as shown in figure 10.1, the number of switch elements and connectors can be limited and this makes it more simple to guarantee meeting the VSWR requirement.

b. Amount of Aircraft Wiring The amount of aircraft wiring required to implement the two types of networks shown in figure 10.1 are dependent on the following factors:

- Number of Network paths required
- Position of ASIs
- Number of ASIs required
- What Class of Interface is provided at a particular ASI

c. Broken Networks In a distributed system the networks are "daisy chained" across the aircraft. If one of the equipments in the chain is removed, such as a store station equipment fitted in a removable pylon, then High Bandwidth networking is also removed from all equipments further down the chain. This problem does not arise in a centralized network system.

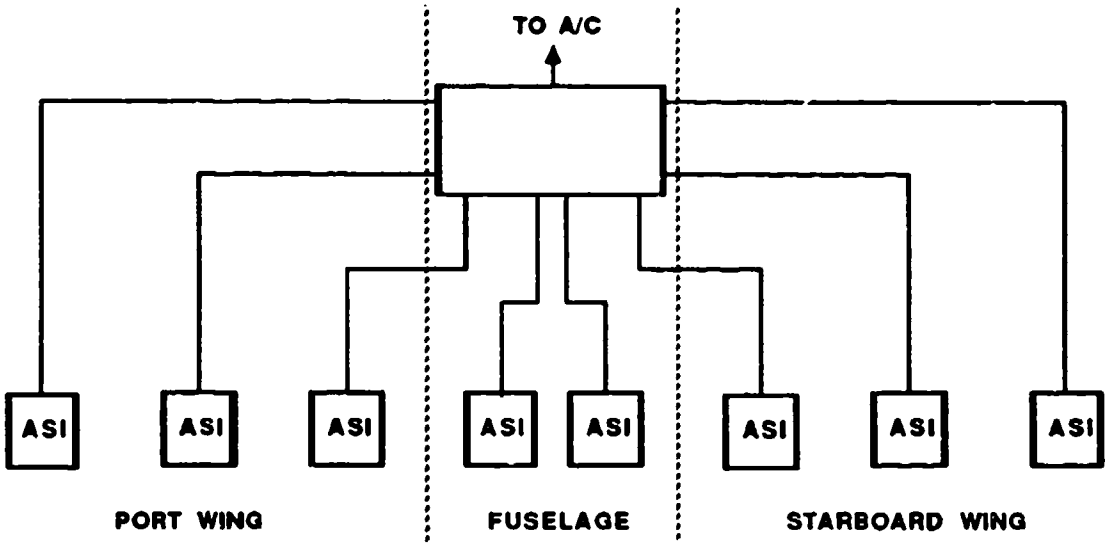

Centralized

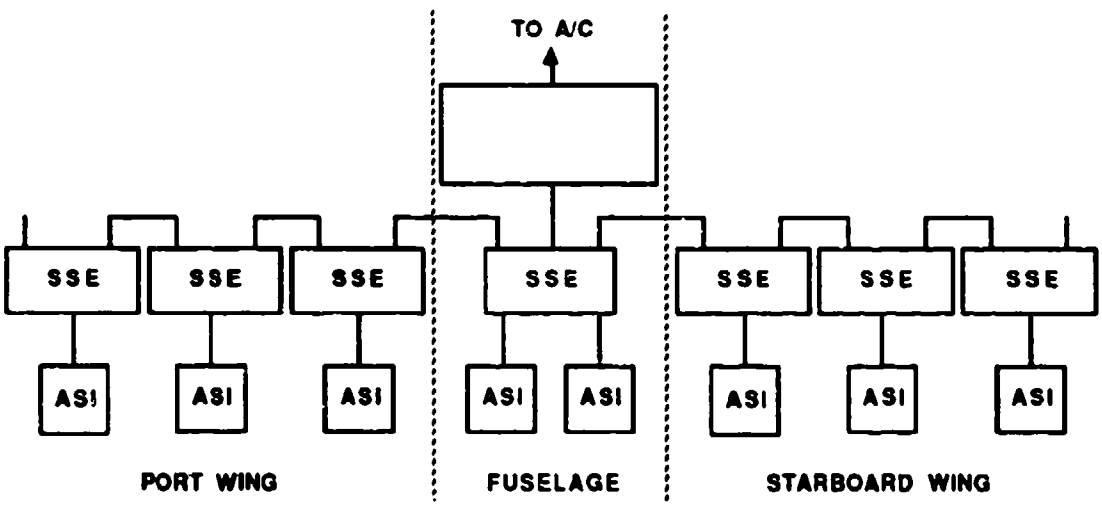

Distributed

FIGURE 10.1 Centralized and Distributed High Bandwidth Networks

10.1.1.1.2 Switched or FDM Technology

ISSUE: Should the High Bandwidth Network use switched or FDM Technology?

GUIDANCE: Use of switched technology is recommended because the present state of FDM technology makes this option very expensive and at present it cannot cope with the transfer of the 1.6 GHz type B signals. However FDM technology could give significant savings in aircraft wiring if a particular aircraft implementation requires many network paths and this may make the use of FDM technology more attractive.

10.1.1.1.3 Shared usage

ISSUE: Could the High Bandwidth Network be used for other functions?

GUIDANCE: There may be opportunities to use the networks provided for the High Bandwidth signals for transfer of other signals particularly certain signals from existing stores (for example the video signal from Maverick AGM-65 missile). Great care must be taken to ensure that these signals are compatible with the network provided for High Bandwidth signals and that such use does not compromise any of the requirements of MIL-STD-1760. Particular areas of concern are: the effect that network terminations may have on these other signals, and the effect on VSWR and attenuation in the High Bandwidth network if additional switch elements are required to accommodate these other signals. Against this are the potential benefits in terms of reduced aircraft wiring and potential space saving within equipments, due to the reduction in circuitry required.

10.1.1.2 Switching Elements This is broken into four further issues:

- Type B signals (1.6 GHz)
- Connectors
- Type A signals (20 MHz)
- Cabling

10.1.1.2.1 Type B signals (1.6GHz)

ISSUE: What type of switching elements should be used for Type B signals?

GUIDANCE: It is recommended that specialized RF relays (for example Dynatech type D1, M or N) be used for switching the type B signals as other switching methods will make it difficult to meet the VSWR requirements. The use of multi-pole relays (as shown in figure 10.2) is recommended to reduce the overall VSWR figure of the network.

10.1.1.2.2 Type A signals (20MHz)

ISSUE: What type of switching elements should be used for Type A signals?

GUIDANCE: It is recommended that high quality signal relays (MIL-R-39016) be used for switching the type A signals, as these are relatively inexpensive and can provide acceptable transfer characteristics to meet the MIL-STD-1760 requirements. Figure 10.2 shows a typical switch configuration for the Type A signal paths.

10.1.1.2.3 Connectors

ISSUE: What type of connectors should be used for High Bandwidth signals?

GUIDANCE: It is recommended that whenever possible within the aircraft wiring and AIS equipments, separate coaxial connectors should be used for all High Bandwidth signals particularly those carrying Type B signals (1.6GHz). An example of a suitable connector for HB1 signals is a MIL-C-39012 SMA type connector. Failing that, the use of coaxial contacts within a larger connector is acceptable. Examples of suitable MIL-C-39029 contacts for use in MIL-C-38999 connectors are for HB1 and HB2 specification sheets /102 and /103; for HB3 and HB4 specification sheets /28 and /75. This will improve the overall VSWR characteristics and reduce interference on the signal lines.

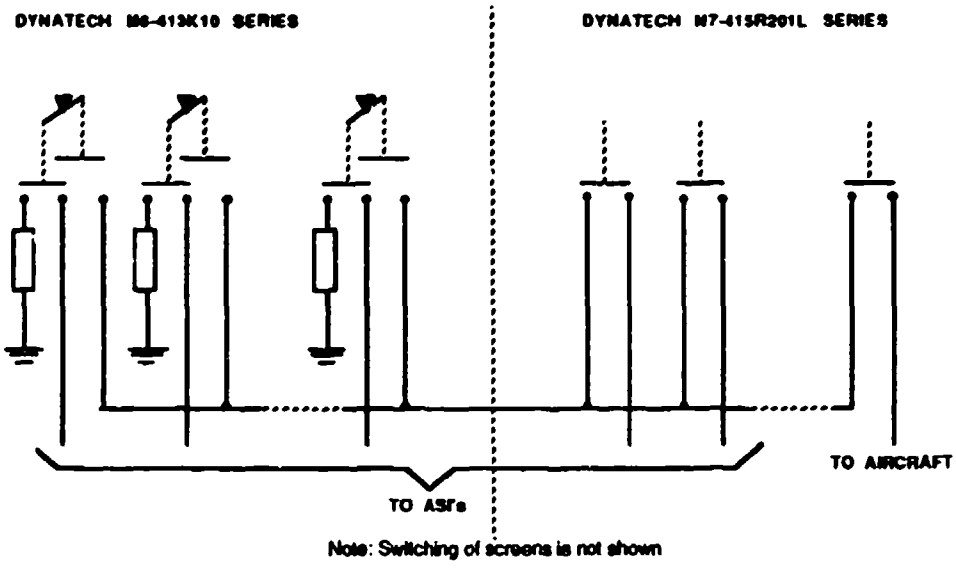

Example of a Type B (RF) Network

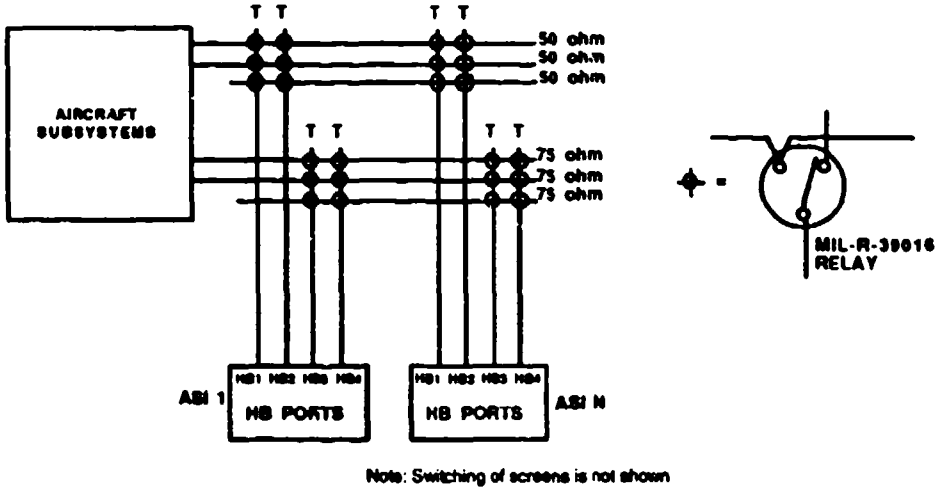

Example of a Type A Network

FIGURE 10.2 Typical High Bandwidth Switching paths

10.1.1.2.4 Cabling

ISSUE: What type of cables should be used for High Bandwidth signals?

GUIDANCE: The use of low loss coaxial cable for all High Bandwidth signal lines is required, as a minimum, to be able to meet the ASI to ASI attenuation requirements for the long cable lengths required in an aircraft. Examples of suitable coaxial cable types are for HB1 and HB2 - RG316 cable and for HB3 and HB4 - RG179 cable. Where possible use of Triaxial cable is recommended to give added protection against interference due to electric or magnetic fields. Examples of suitable triaxial cable types are for HB1 and HB2 - Trompeter TRC-50-2 and for HB3 and HB4 - Trompeter TRC-75-2.

10.1.2 MIL-STD-1553 Issues The following issues are considered:

- Bus Topology
- Hardware/Software partitioning
- Impact of Critical Signals
- Open Circuit Stubs

10.1.2.1 Bus Topology Four separate bus configurations are considered here:

- Local or Aircraft Bus
- Shared Use
- Single or Multiple Buses
- Linear Bus or other Topology

10.1.2.1.1 Local or Aircraft Bus

ISSUE: Should the MIL-STD-1553 bus at the ASI be a local bus or part of a common aircraft bus?

GUIDANCE: It is recommended that a common aircraft bus, as shown in figure 10.3, be used in preference to separate local buses. The use of separate buses for each ASI requires that separate bus control circuitry is provided for each ASI. This when compared with the common bus approach, will increase the size of electronics required, reduce the overall reliability of the system and add on extra levels of complexity to the overall design. One advantage of using individual buses (figures 10.3) is to provide isolation of the bus at the ASI. This is necessary to prevent radiation of data from an open circuit stub subsequent to a store being released. However, isolation of the ASI can easily be provided by other means, such as relays.

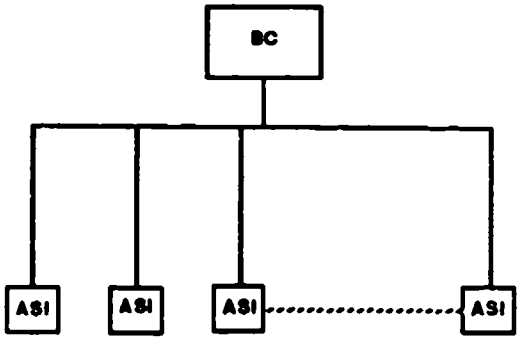

Common MIL-STD-1553 Stores Bus

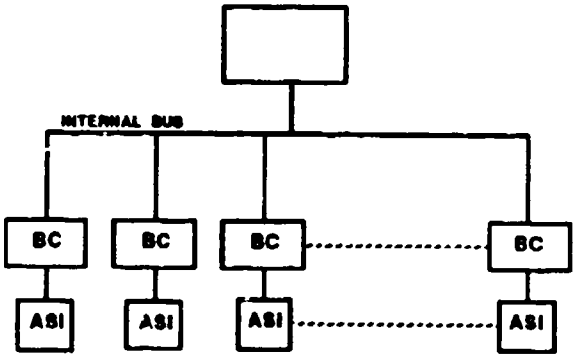

Individual MIL-STD-1553 Stores Buses

FIGURE 10.3 Local and aircraft MIL-STD-1553 buses

10.1.2.1.2 Single or Multiple Buses

ISSUE: Should single or multiple buses be used for the stores bus?

GUIDANCE: A single dual redundant bus is recommended in preference to multiple buses (see figure 10.4), unless the number of Remote Terminal addresses required cannot be accommodated on a single bus. A single bus can support a maximum of 30 different Remote Terminal addresses but it is recommended that the total used on a single bus be limited to 25 to allow some room for future expansion. A single bus should be adequate in terms of bus traffic and reliability and will minimize the amount of electronics required in terms of numbers of bus controllers.

10.1.2.1.3 Shared Use

ISSUE: Should the stores bus be combined with other MIL-STD-1553 aircraft buses?

GUIDANCE: It is recommended that the stores bus, wherever possible, be combined with the bus used within the AIS. Both these buses require critical data to be transferred and both need to be under the control of the AIS. By combining these buses aircraft wiring is reduced and fewer bus controllers are required and this will reduce the size of the electronics (see Figure 10.5). It is not recommended that the stores bus be combined with any other aircraft bus as there will be a conflict between the types of data to be transferred which could make it difficult to meet the requirements for critical signal transfer on the stores bus (see paragraph 10.1.2.2).

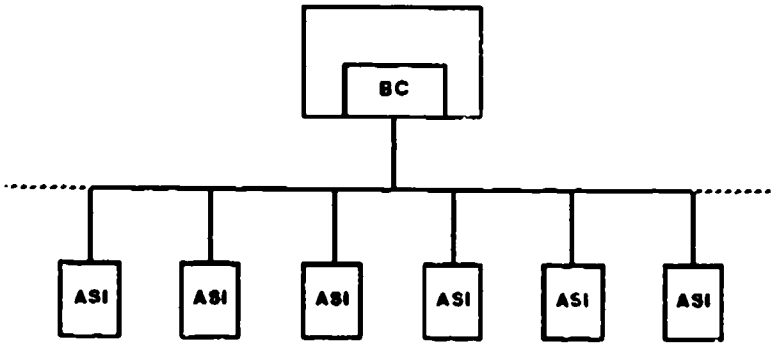

Single Bus System

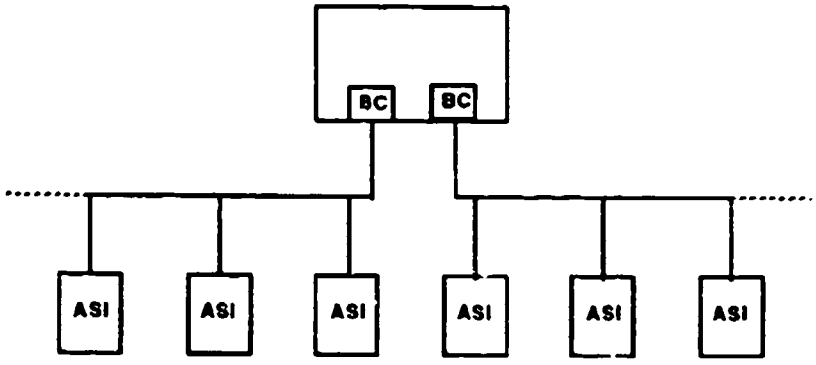

Multiple Bus System

FIGURE 10.4 Single and Multiple Stores Buses

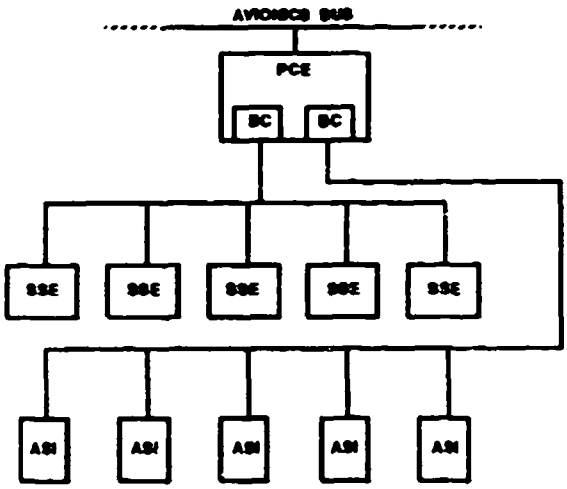

Separated Stores Bus and Internal AIS Bus

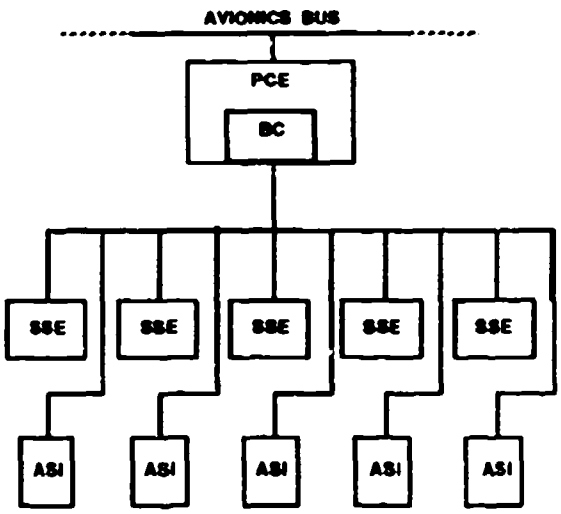

Common Stores and AIS Bus

FIGURE 10.5 Separate and shared MIL-STD-1553 buses

10.1.2.1.4 Linear Bus or Other Topology

ISSUE: What topology should be used for the stores bus?

GUIDANCE: A linear bus (see figure 10.6) is one which is routed through the aircraft, including the wings, and stubs taken from the bus as close as possible to the store stations and remote units. An alternative topology is for the bus to be confined to the fuselage (see figure 10.7). Mux bus wiring from an ASI on the wing pylons would have to be routed down the length of the wing to a stubbing point in the fuselage. This second alternative would require more aircraft wiring, but provide greater system survivability of battle damage. The two buses in a dual redundant system could also be separated making it very unlikely that both are destroyed by the same area of damage.

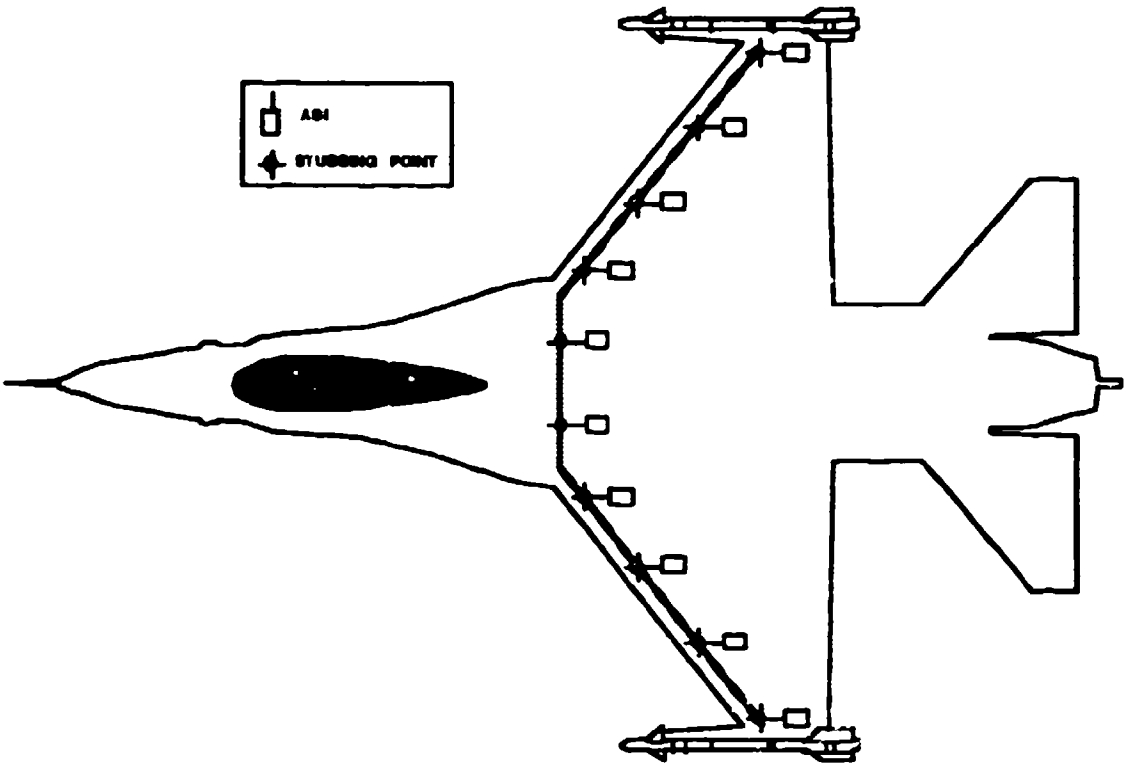

FIGURE 10.6 Linear Bus

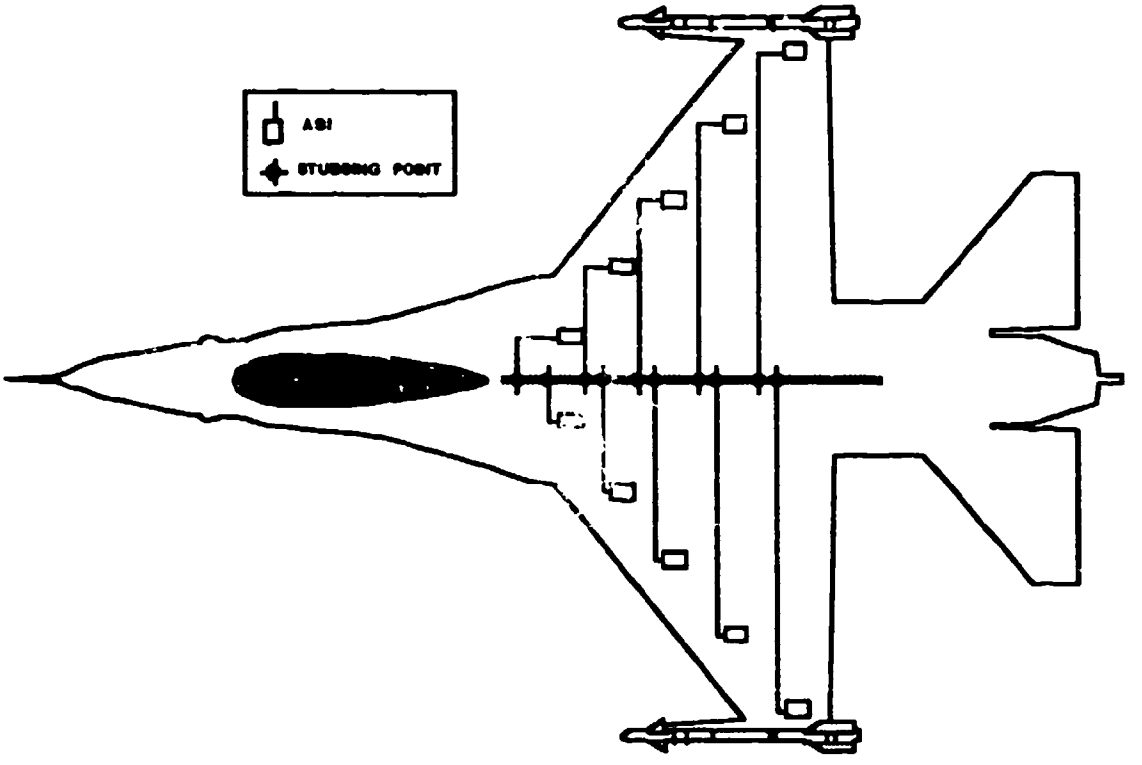

FIGURE 10.7 Starred Bus

10.1.2.2 Impact of Critical Signals

ISSUE: What impact does the requirement to transfer critical data have on the stores bus?

GUIDANCE: MIL-STD-1760 requires that the probability of inadvertent generation of a valid critical and authority word demanding critical action shall not exceed 1 in 10^5 flight hours. To meet this requirement great care must be taken to design a bus controller of high integrity for the stores bus. See paragraph 10.2.2.

10.1.2.3 Hardware/Software partitioning

ISSUE: How should the bus control function be partitioned between hardware and firmware?

GUIDANCE: The actual partitioning between hardware and firmware is for the designers to determine, but they should be aware of all of the requirements of MIL-STD-1760 before deciding on this partitioning. The following gives two examples of requirements that need to be considered:

a. 1 in 10^5 hours critical probability quoted in 10.1.2.2 above

b. The AEIS bus controller shall be capable of transmitting commands at a rate such that an intermessage gap of 750 microseconds maximum can be supplied when needed. This requirement has been removed by notice 3 thereby allowing a more stressing requirement to be imposed on individual aircraft, that is as short as 50 microseconds maximum.

Figure 10.8 shows a typical design for a bus controller. The following indicates typical partitioning of functions between hardware and firmware:

a. Hardware:
- Checksum generation and checking
- (Critical) Authority code generation (MIL-STD-1553)
- Protocol error handling

b. Firmware:
- Data bus changeover
- Busy management
- Status word exception handling
- Combining safety critical and non-critical message demands
- Insertion of Critical Authority code
- Safety Critical message checks to include inhibiting any transmission of nuclear weapon subaddresses to any ASI
- Checking that critical control and authority words match before enabling transmission of Mission Store Control Message

10.1.2.4 Open Circuit Stubs

ISSUE: What effect does open circuit stubs have on the design of the stores bus?

GUIDANCE: After a store has been released, the MSI end of the umbilical will probably remain exposed and therefore able to radiate the activity on the mux bus. To prevent this, the stub providing the mux bus to the ASI needs to be isolated following store release. Some methods of isolation are shown in figure 10.9.

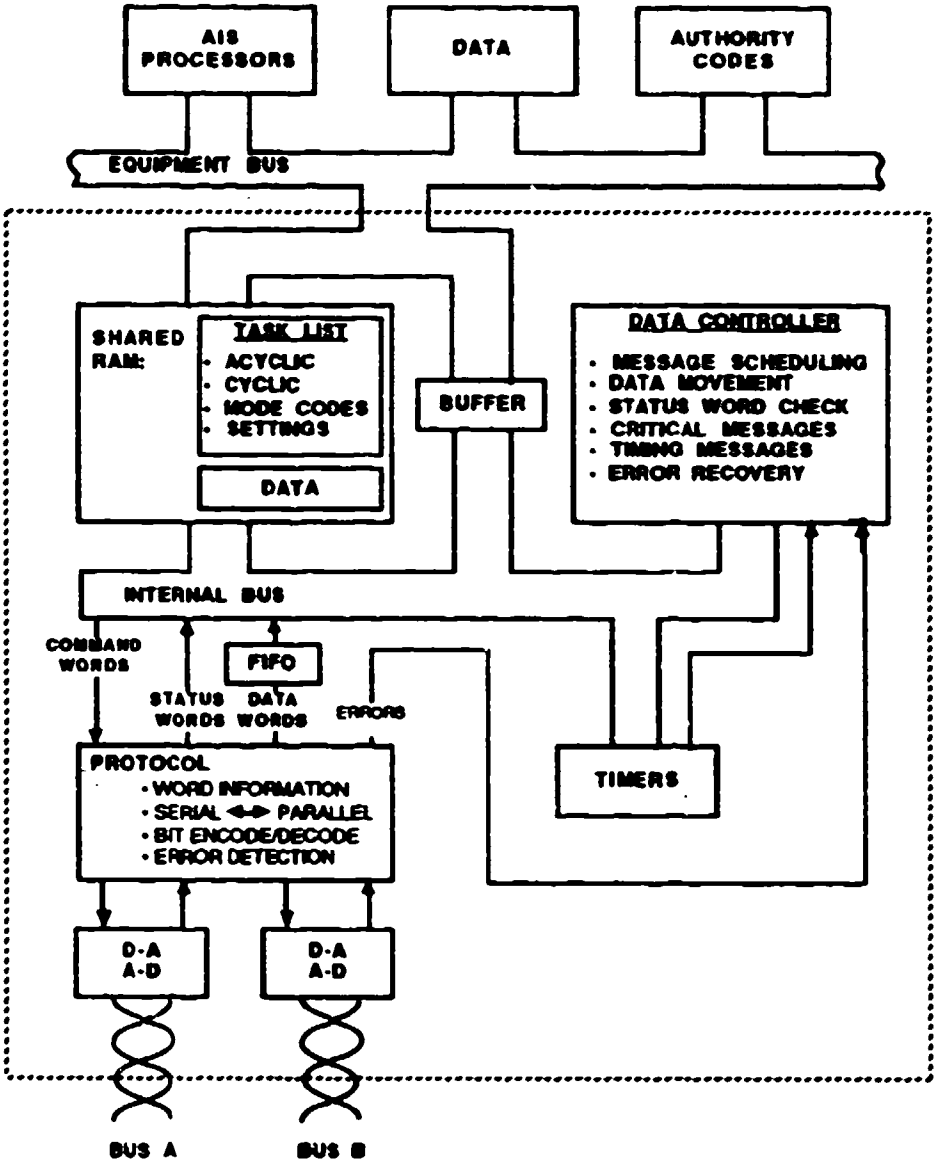

FIGURE 10.8 Typical MIL-STD-1553 Bus Controller

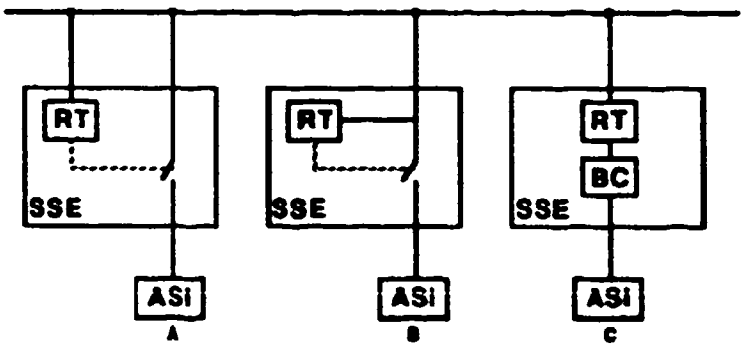

FIGURE 10.9 Methods of isolating open circuit stubs

10.1.3 Low Bandwidth Issues The following issues are considered: networks, switching elements, and connections.

10.1.3.1 Network This is broken into four further issues:

- Centralized or Distributed
- Shared Usage
- Technology
- Impact of Potential Use as a Low Speed Data Bus

10.1.3.1.1 Centralized or distributed

ISSUE: Should the Low Bandwidth Network be centralized or distributed?

GUIDANCE: A centralized system is recommended (same configuration as a High Bandwidth centralized network shown in figure 10.1) to provide the Low Bandwidth Network in the same area as the High Bandwidth Network (see paragraph 10.1.1). However, this is dependent on the particular aircraft implementation. A centralized system would give a greater aircraft wiring weight, but in a distributed system where the network is "daisy chained" (figure 10.1), the removal of a unit, such as a pylon mounted Store Station Equipment, would result in the loss of the Low Bandwidth network to units further down the chain.

10.1.3.1.2 Technology

ISSUE: What technology should be used for the Low Bandwidth Network?

GUIDANCE: Use of switched technology, such as relays, is recommended, as the present state of FDM technology makes this option very expensive and it is unable to transmit DC levels as required by MIL-STD-1760.

10.1.3.1.3 Shared Usage

ISSUE: Could the Low Bandwidth Network be used for other functions?

GUIDANCE: There should be an opportunity to use this network to transfer other audio signals particularly signals from existing stores, for example the audio from a Sidewinder AIM-9L missile. The designer should ensure these signals are compatible with the network and that they do not compromise the requirements of MIL-STD-1760.

10.1.3.1.4 Impact of potential use as Low Speed Data Bus

ISSUE: How is the Low Bandwidth Network affected by its potential use as a Low speed Data Bus?

GUIDANCE: It is recommended that if the Low Bandwidth network were to be used as a low speed data bus, the bandwidth of the network should be increased to allow signal frequencies between DC and 1MHz to be passed. Otherwise the use of this network as a low speed data bus should not greatly impact the design of the network, as the existing requirements of MIL-STD-1760 should ensure that this network can support being used for this purpose. The designer should be aware of this potential additional requirement to ensure that this facility can easily be accommodated in the future.

10.1.3.2 Switching Elements

ISSUE: What type of switching elements should be used for Low Bandwidth signals?

GUIDANCE: It is recommended that signal relays conforming to MIL-R-39016 be used for switching the Low Bandwidth signals, as semiconductor switches of comparable size would significantly degrade the signal.

10.1.3.3 Connections This is broken into two further issues; connectors and cabling.

10.1.3.3.1 Connectors

ISSUE: What type of connectors should be used for Low Bandwidth signals?

GUIDANCE: It is recommended that whenever possible twinaxial or triaxial connectors or triaxial contacts in a larger connector be used.

10.1.3.3.2 Cabling

ISSUE: What type of cable should be used for Low Bandwidth signals?

GUIDANCE: The use of triaxial or twinaxial cable is recommended. Two coaxial cables with the screens tied may be used if absolutely necessary.

10.1.4 Discrete Signal Issues The following interfaces are considered:

- Release Consent
- Address
- Interlock
- Structure Ground

10.1.4.1 Release Consent This is broken into three issues: Switching Location; Switching Design, Elements and Location; and Internal Information Transfer.

10.1.4.1.1 Switching Location

ISSUE: Where should the switching elements for Release Consent be located?

GUIDANCE: As this is a safety critical interface, the final switch elements in the signal path must be as close as possible to the ASI, thereby minimizing the possibility of electromagnetic interference inadvertently activating the interface. The return for Release Consent is the same line as used for 28V DC Power 2 return. It is therefore recommended that the switching circuits for 28V DC Power 2 be located close to the switching circuits for Release Consent.

10.1.4.1.2 Switching Design, Elements and Location

ISSUE: What guidance can be given for the design of the switching circuits for Release Consent?

GUIDANCE: As this is a safety critical signal the design of the switch should meet the normal requirements for such signals (see 10.2.1). At least two switch elements should be provided in this signal path as shown in figure 10.11 to ensure no single fault can inadvertently activate the signal. One of these switch elements should provide an air break for protection against EMI and the second switch element should be a semiconductor switch for protection against vibration. Care should be taken in the design of the release consent switches to ensure that the isolation requirement of MIL-STD-1760 (100Kohms) between Release consent signals at different ASIs is met. Special consideration should be given to the design of the BIT circuit for this signal, to ensure that any biasing circuits do not compromise the isolation requirements.

10.1.4.1.3 Internal Information Transfer

ISSUE: How does Release Consent effect internal information transfer within the AIS?

GUIDANCE: It is recommended that Release Consent is only activated after a positive aircrew action such as operation of Trigger. This operation should be transferred to the remote unit using discrete signals, so that interlocks can be provided on the release consent switching circuit thereby inhibiting activation of the output unless Trigger is operated. This, combined with the use of critical data transfer on the internal MIL-STD-1553 AIS bus, will provide a high level of safety on this critical interface. See Figure 10.10.

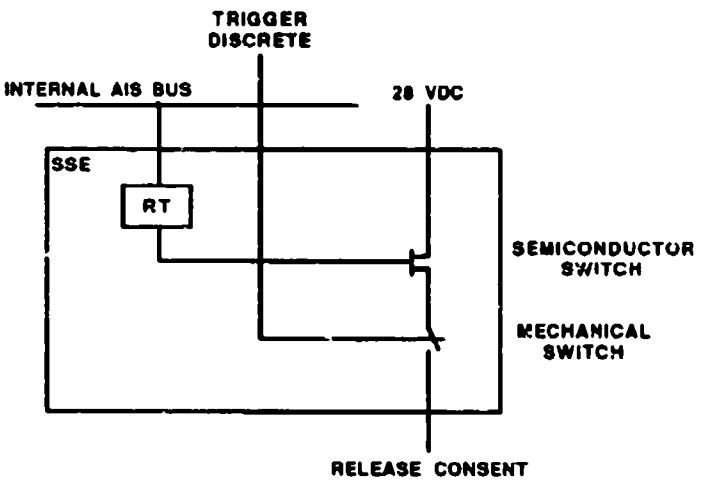

FIGURE 10.10 Release Consent Switching Circuit

10.1.4.2 Interlock This is broken into two issues; monitoring location and circuitry.

10.1.4.2.1 Monitoring Location

ISSUE: Where should the Interlock monitoring circuitry be located?

GUIDANCE: It is recommended that the interlock signal be monitored close to the ASI to reduce aircraft wiring. The Interlock signal may be used directly or indirectly to remove 28V DC power from the store for deadfacing the connector when the store is not present. If Interlock is to be used for this, then it is recommended that the monitor circuit for this signal be close to the power switching elements for the particular ASI.

10.1.4.2.2 Circuitry

ISSUE: What guidance can be given for the designs of the Interlock circuitry?

GUIDANCE: The designer should be aware of all the requirements concerning the interlock interface especially if this interface is to be used to determine store presence. If this is the case, the designer should ensure that the response time of the monitoring circuit to changes of Interlock status is acceptable for the overall system design as well as ensuring all the voltage, current and threshold requirements of MIL-STD-1760 are met. A typical Interlock circuit is shown in figure 10.11.

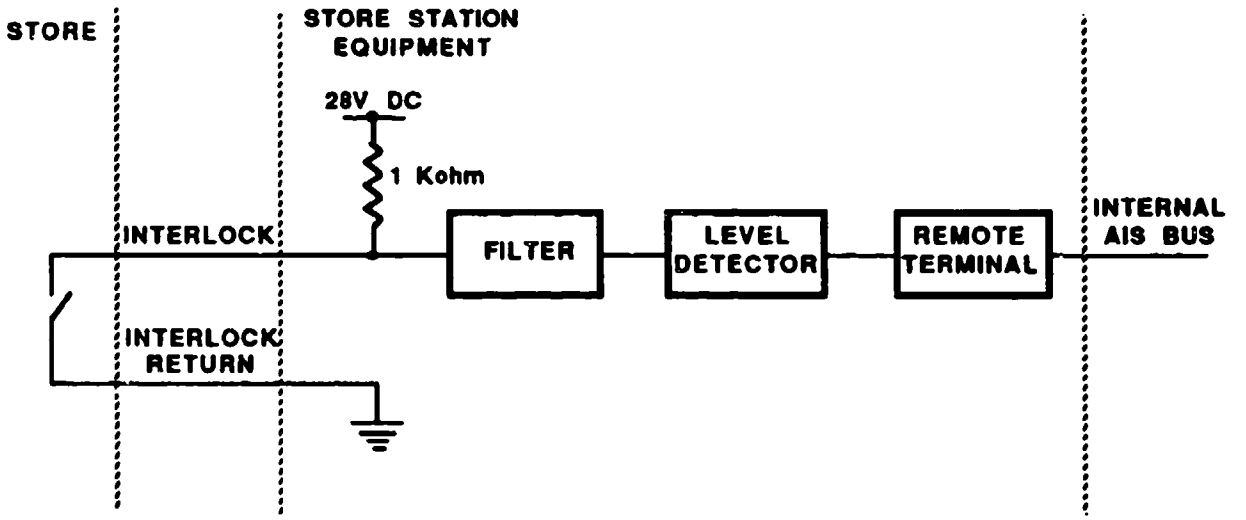

FIGURE 10.11 Typical Interlock Circuit

10.1.4.3 Address This is broken into two issues; fixed or variable and determined at ASI or Equipment.

10.1.4.3.1 Fixed or Variable

ISSUE: Should the Address discretes have fixed or variable value?

GUIDANCE: It is strongly recommended that fixed addresses are used to identify the Remote Terminal address at all ASIs. If variable addresses are used it would degrade the safety of the system when considering the transfer of safety critical information on the MIL-STD-1553 Mux Bus.

10.1.4.3.2 Determined at ASI or Equipment

ISSUE: Where should the RT Address of an ASI be determined?

GUIDANCE: The Address should be determined at any convenient point in the aircraft that is non-interchangeable. For example, as shown in figure 10.12, if there is an ASI in a removable structure the address determination circuitry should not be located in the structure itself, but the wiring should be routed through the structure to address determination circuitry located in the non-removable structure. This will prevent the possibility that simply by exchanging structures two different ASI could be allocated the same RT Address (see also 13.1.2.3).

10.1.4.4 Structure Ground

ISSUE: What guidance can be given for the Structure Ground signals?

GUIDANCE: This signal should be connected to aircraft structure ground at the closest convenient point to the ASI. This signal is only used to minimize shock hazards to personnel and must not be used as a normal signal or power return path. The ASI to MSI umbilical cable should have an overall screen which should be bonded to the shell of the connectors at either end, thereby providing a structure ground path to the store, capable of carrying the currents generated by lightning strikes etc.

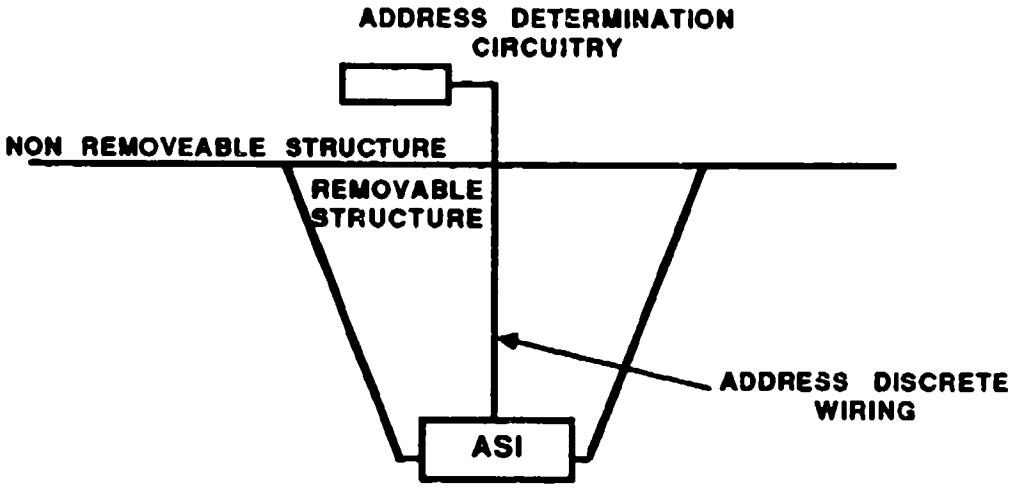

FIGURE 10.12 Location of RT Address

10.1.5 Power Issues The following primary power issues are considered:

a. Centralized/Distributed
b. Elements
c. Connections
d. Signal Specific Design

10.1.5.1 Centralized or distributed This is broken into two further issues: switching and fault isolation.

10.1.5.1.1 Switching

ISSUE: Should the power switching circuitry be centralized or distributed?

GUIDANCE: It is recommended that, wherever possible, the power switching elements be located close to the ASI particularly for 28V DC Power 2 which should be considered as the safety critical supply. However, if there are limiting factors, such as lack of space in a pylon, then some of these power switching elements could be located centrally. As shown in figure 10.13, a centralized system would require more aircraft wiring compared with a distributed system.

10.1.5.1.2 Fault Isolation

ISSUE: Where should the fault isolation elements for the power signals be located?

GUIDANCE: It is recommended that, wherever possible, the fault isolation elements should be located close to, but before, the switching elements as shown in figure 10.14. This will allow the fault isolation element to be monitored by the internal AIS BIT without having to activate the switch elements and thus apply power to the store. This means the state of all the circuit breakers in the system can be obtained by the AIS before the aircraft is airborne allowing any corrective action to be taken before the start of a mission.

10.1.5.2 Elements This is broken into two further issues: Power Switches and Isolation Elements.

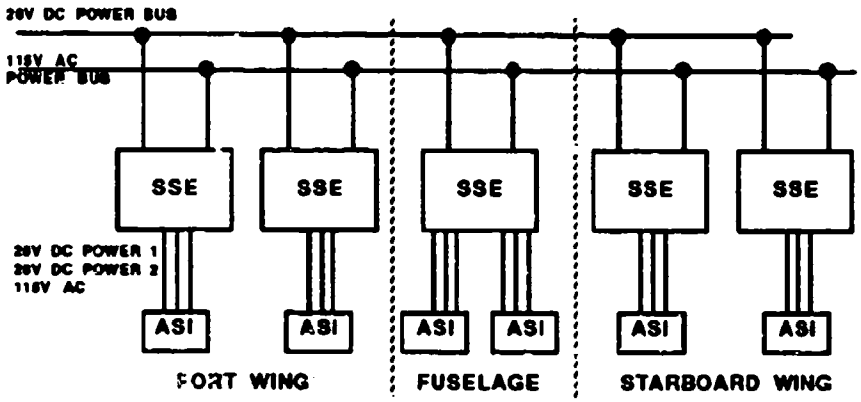

Distributed Power Switching

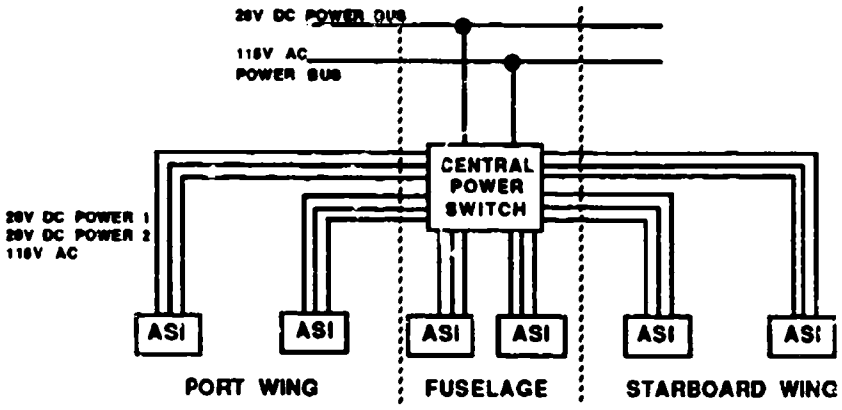

Centralized Power Switching

FIGURE 10.13 Centralized or Distributed Power Switching

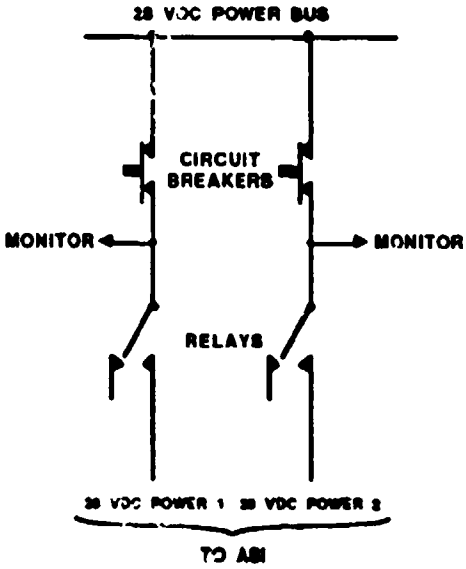

FIGURE 10.14 Location of Power Fault Isolation Elements

10.1.5.2.1 Power Switches

ISSUE: What type of power switching elements should be used?

GUIDANCE: Mechanical power relays to MIL-R-6106 should be used for the switching of power as the voltage drops associated with solid state power switching devices would make it very difficult to meet the requirements of MIL-STD-1760.

10.1.5.2.2 Isolation Elements

ISSUE: What type of fault isolation elements should be used?

GUIDANCE: Circuit Breakers conforming to MIL-STD-1498 should be used for the isolation elements in the power lines as other devices, such as fuses, cannot meet the current-time profiles specified in MIL-STD-1760.

10.1.5.3 Connections This is broken into two further issues: connectors and cabling.

10.1.5.3.1 Connectors

ISSUE: What guidance can be given for the connectors to be used for power interfaces?

GUIDANCE: It is recommended that power interface lines should be routed through connectors with the largest contacts practical to reduce voltage drops, that is use size 16 contacts or larger wherever possible.

10.1.5.3.2 Cabling

ISSUE: What guidance can be given for the cabling to be used for Power signals?

GUIDANCE: It is recommended that the largest cable that is practical be used for all power wiring to reduce the voltage drops through the cable, that is use size 16 AWG or larger wherever possible.

10.1.5.4 Signal Specific Design This is broken into three further issues: 28V DC Power 1, 28V DC Power 2, and 115V AC.

10.1.5.4.1 28V DC Power 1

ISSUE: What specific guidance can be given for 28V DC Power 1?

GUIDANCE: This signal should be treated as a non-critical power interface that can be applied to the store at any time.

10.1.5.4.2 28V DC Power 2

ISSUE: What specific guidance can be given for 28V DC Power 2?

GUIDANCE: This interface should be treated as a safety critical supply and, as shown figure 10.15, it is recommended that this be interlocked with an aircrew operated switch, such as Master Arm, such that it cannot be activated until there has been a positive action by the aircrew. The designer should also be aware that the return for 28V DC Power 2 is also used as

the return for Release Consent. This could affect the way these functions are partitioned within a Store Station Equipment.

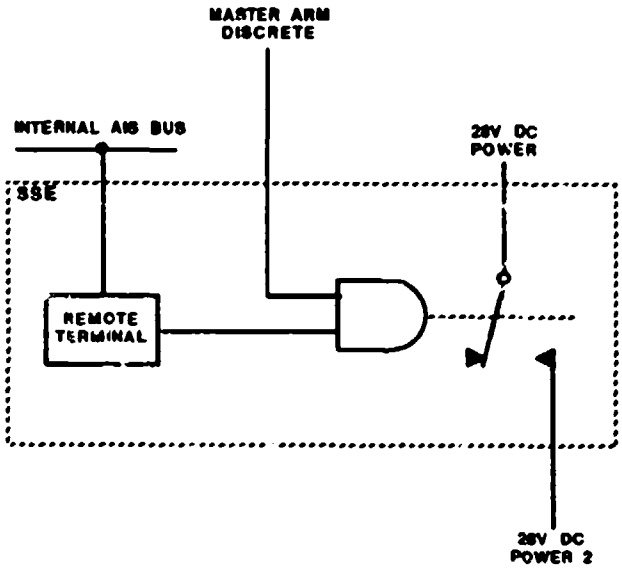

FIGURE 10.15 28V DC Power 2 Control

10.1.5.4.3 <u>115V AC</u>

ISSUE: What specific guidance can be given for 115V AC?

GUIDANCE: This interface should be treated as a non-critical power supply that can be applied to the store at any time. It is recommended that all three phases be switched together to reduce the circuitry required for power switching and to reduce the time slew between the switching of individual phases. If this signal is to be used to power stores that only require a single phase (such as the AIM-9 Sidewinder missiles), then the designer must consider the implications of having the remaining two phases active but not connected. In this case separate switch elements on each phase could be used or additional switch elements introduced.

10.1.6 <u>Auxiliary Signal Set Issues</u> The following issues are considered:

Auxiliary Power Switching/Isolation
Auxiliary Interlock Monitoring
Auxiliary Structure Ground

10.1.6.1 <u>Auxiliary Power</u> This is broken into two further issues: 28V DC and 115V AC.

10.1.6.1.1 <u>28V DC</u>

ISSUE: What guidance can be given for Auxiliary 28V DC?

GUIDANCE: The same recommendations apply to Auxiliary 28V DC power as given for primary 28V DC Power 2 in 10.1.5 above. However the size of the switching and isolation elements required for Auxiliary power may make it impractical to distribute the circuitry especially within small pylons.

10.1.6.1.2 115V AC

ISSUE: What guidance can be given for Auxiliary 115V AC?

GUIDANCE: The same recommendations apply to Auxiliary 115V power as given for primary 115V power in 10.1.5 above. However the size of the switching and isolation elements required for Auxiliary power may make it impractical to distribute the circuitry especially within small pylons.

10.1.6.2 Auxiliary Interlock Monitoring

ISSUE: What guidance can be given for Auxiliary Interlock monitoring?

GUIDANCE: The design of the auxiliary interlock circuitry should be similar to that used for the primary interlock signal discussed in 10.1.4.2 and shown in figure 10.12. It is recommended that the monitor circuit be located close to the ASI to reduce aircraft wiring. The designer should be aware that this monitor may be used directly or indirectly to remove auxiliary 28V DC power from an ASI to deadface the connector when store absence is detected.

10.1.6.3 Auxiliary Structure Ground

ISSUE: What guidance can be given for the Auxiliary Structure Ground signal?

GUIDANCE: This signal should be connected to aircraft structure ground at the closest convenient point to the ASI. This signal is only used to minimize shock hazards to personnel and must not be used as a normal signal or power return path. See the guidance given for primary Structure Ground in 10.1.4.4.

10.1.7 Connector Issues The following two issues are considered: the primary connector and the auxiliary connector.

10.1.7.1 Primary Connector This is broken into two further issues: High Bandwidth Contacts and other guidance.

10.1.7.1.1 High Bandwidth Contacts

ISSUE: What contacts should be used for High Bandwidth signals in the primary connector?

GUIDANCE: It has been found that contacts produced against specification sheets /28 and /75 to MIL-C-39029 cannot be guaranteed to meet the VSWR requirements for Type B signals as specified in MIL-STD-1760. For both High Bandwidth 1 and High Bandwidth 2 signals contacts built to the following specification sheets should be used in place of the /28 and /75 contacts specified in MIL-STD-1760. Specification sheet 102 for the pin contact and specification sheet 103 for the socket contact.

10.1.7.1.2 Other Guidance

ISSUE: What other guidance can be given for the primary connector?

GUIDANCE: Great care needs to be taken if cable clamps are to be used on the backshells of the primary connector. As shown in figure 10.16 the triaxial contacts extend relatively far from the rear of the connector insert and incorrect cable clamping can put stress directly on these contacts which can physically bend or move them. This causes slight mismatches when the

connectors are mated resulting in excessive wear. If cable clamps are required on the back of a connector then the use of a spacer is recommended, to ensure these particular contacts cannot be distorted.

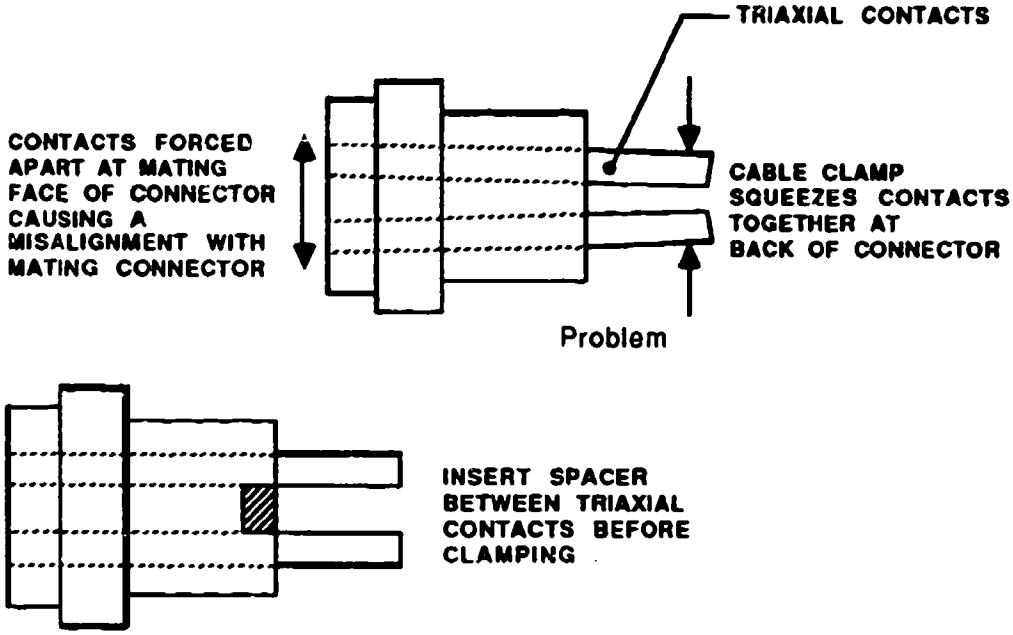

FIGURE 10.16 Cable Clamping on Primary Connector

10.1.7.2 Auxiliary Connector No particular guidance is offered for this connector.

10.1.8 Reserved Provisions Issues The following issues are considered: Fiber Optics and 270V DC.

10.1.8.1 Fiber Optic This is broken into two further issues: connector contacts and hardware provisions.

10.1.8.1.1 Connector Contacts

ISSUE: What provisions should be made in terms of connector contacts for the Fiber optic signals?

GUIDANCE: The connector cavities for the ASI and the umbilical (with MSI as applicable) should only be fitted with "plugs." Because of the lack of suitable ferrules, no attempt should be made to preempt future "contact" designs.

10.1.8.1.2 Hardware Provision

ISSUE: What hardware provisions should be made for the Fiber optic signals?

GUIDANCE: No specific hardware provision need be provided apart from ensuring spare module positions are available in the central control equipments.

10.1.8.2 270V DC This is broken into three further issues: hardware, connector, and cabling provisions.

10.1.8.1.2 Hardware Provisions

ISSUE: What hardware provisions should be made for the 270V DC signals?

GUIDANCE: Ensure spare space is available in all store station equipments to incorporate a 270V DC switch function.

10.1.8.2.2 Connector Provisions

ISSUE: What connector provisions should be made for the 270V DC signals?

GUIDANCE: Insert size 16 socket or pin contacts as defined by slash sheet /56 and /58 to MIL-C-39029, as appropriate, at all ASI connectors. Ensure all store station equipments provide enough spare contacts on their external connectors to allow for incorporation of 270V DC switching function within the equipment.

10.1.8.2.3 Cabling Provisions Ensure spare wires are provided in cable runs between each ASI connector and the appropriate store station equipment and provide spare wires in cable runs from each store station equipment to central power distribution equipment.

10.2 Detailed Guidance on Specific Issues Guidance is provided on the following subjects:

- Safety Critical Switching
- Use of Standard Modules
- Connectors
- Physical design of equipment
- Safety Critical Data Transfer
- Built in Test Circuitry
- Connector Pin Allocation
- Electromagnetic considerations (EMC, EMP, TEMPEST)

10.2.1 Safety Critical Switching The issues discussed in this section give general guidance for the design of all safety critical output circuits within the AIS but have particular relevance to the design of the circuits to control the MIL-STD-1760 Release Consent signal as this is classed as a safety critical output.

10.2.1.1 Number of Switch Elements

ISSUE: How many switch elements should be provided in safety critical signal paths?

GUIDANCE: There should be at least three switch elements under the control of the AIS between a power source and any safety critical output as shown in Figure 10.17. This allows each switch element to be exercised for BIT purposes while still ensuring that no single fault could inadvertently activate a safety critical output as discussed in 10.2.4.3.

10.2.1.2 Position of switch elements

ISSUE: Where should the switch elements in the safety critical signal paths be located?

GUIDANCE: As a minimum the final switch element in a safety critical signal path should be positioned as close to the store interface as possible. This minimizes the risk that the safety critical signal could be activated by electromagnetic pick up in the wiring to the store interface.

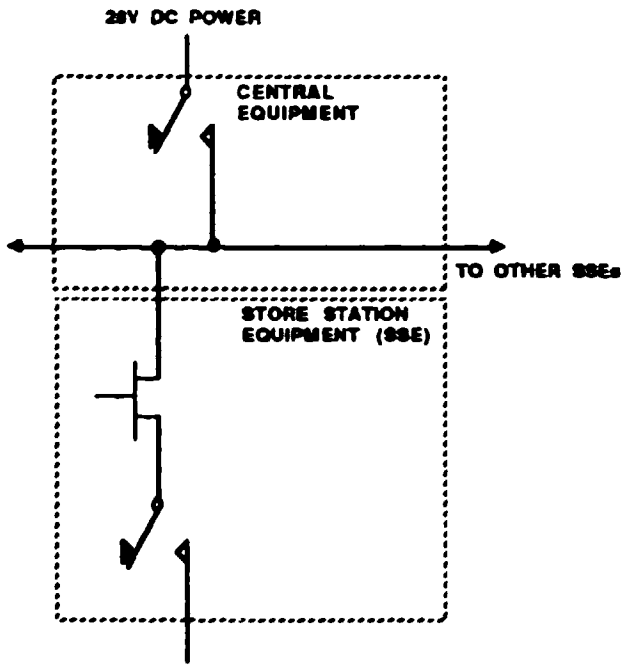

FIGURE 10.17 Safety Critical Switch

10.2.1.3 Type of switch elements

ISSUE: What type of switch elements should be used in the safety critical signal paths?

GUIDANCE: The final switch element in any safety critical signal path should be of a mechanical type which creates an air break in the signal path. This affords protection against electromagnetic interference activating the safety critical output. One of the other switch elements in the signal path should be of a semiconductor type, if possible. This affords greater protection against vibration compared with the mechanical type of switch and also allows for greater control of the actual switching time than can be achieved by using mechanical switch elements.

10.2.2 Safety Critical data transfer

ISSUE: What guidance can be given for the transfer of safety critical data on the MIL-STD-1553 bus?

GUIDANCE: MIL-STD-1760 defines two pairs of words for transfer of safety critical data. The first word in the pair is a Critical Control Word containing the actual safety critical information. The second word in the pair is a Critical Authority Word which is a polynomial code check on the critical data bits in the Critical Control Word. MIL-STD-1760 also specifies an extremely low probability that valid Critical Control and Authority words can be generated in error. To achieve this requirement the processing for generating the control word should be separate and completely independent of the processing for generating the authority word. One method of achieving this separation is shown in figure 10.18. The central control processor monitors the state of the critical switch inputs (such as MAS, Trigger, Weapon Release, EJ, SJ) and when it identifies that a change of critical state is required the processor generates the relevant critical control word. This Critical control word is then passed to the Bus Controller for transmission on the MIL-STD-1553 Stores Bus. The Bus Controller identifies that a critical

Authority word is required and reads this word from an authority code table. However access to this authority code table is limited by separate discrete monitors from the critical switch inputs therefore access can only be obtained to those codes relevant to the critical state presently demanded by the critical switches, for example codes associated with jettison demands are only available if SJ or EJ has been selected.

10.2.3 Use of Standard Modules

10.2.3.1 Process Control Equipment (PCE)

ISSUE: Can standard modules be used in the Process Control Equipments?

GUIDANCE: The use of standard modules within the PCE is dependent on the particular aircraft requirements. However, if the avionics architecture for a particular aircraft is based on "Pave Pillar," then the PCE could utilize standard modules to perform the following functions:

- Power Supply Unit (PSU)
- Memory
- Central Processing Unit (CPU)
- MIL-STD-1553 Bus Control

10.2.3.2 Store Station Equipments (SSE)

ISSUE: Can standard modules be used in Store Station Equipments?

GUIDANCE: The differing physical and environmental constraints between aircraft and even between different pylon positions on the same aircraft means that each SSE is likely to be unique. However, there is scope for developing small standard modules which could be used in many different SSE. Examples of such modules are: MIL-STD-1553 Remote Terminal Module, Processing and Control Module, High Current Switch Module (Relays and FETs), Power Supply Module.

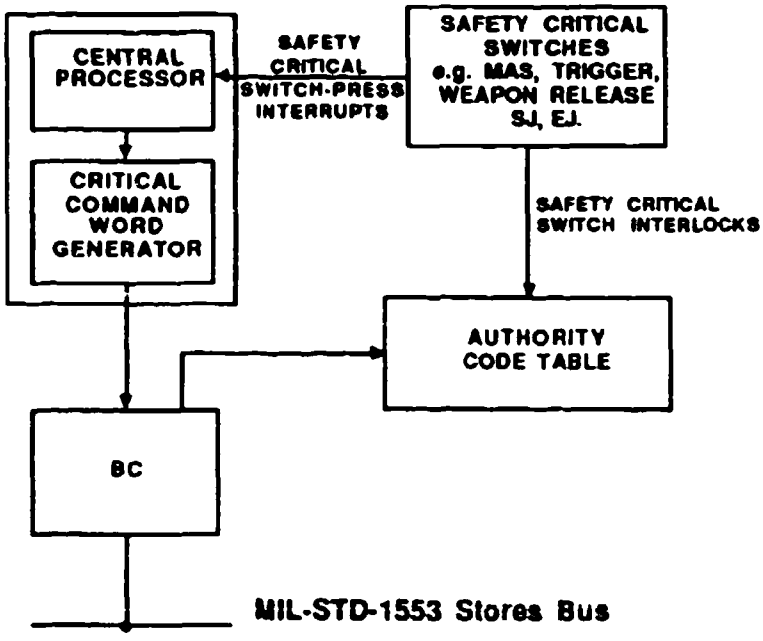

FIGURE 10.18 Safety Critical Data Transfer

10.2.4 Built in Test Circuitry

ISSUE: What guidance can be given for BIT circuitry in the AIS?

GUIDANCE: The actual additional circuitry required to perform BIT will be monitor circuits to ensure particular functions are being activated when demanded and some additional circuits to excite system inputs under control of the central processor. The following subparagraphs describe the BIT circuits which may be added to enable particular types of signals to be tested.

10.2.4.1 Discrete Input BIT The circuit shown in figure 10.19a could be used for BIT on Discrete input signals such as Interlock. High and low input states of the input receiver can be tested by driving the BIT signal high and low.

10.2.4.2 Discrete Output BIT The circuit shown in figure 10.19b could be used for BIT on Discrete output circuits. Each output type will have a grouped monitor signal and during BIT each output will be individually set active and monitored functionally.

10.2.4.3 Safety Critical Output BIT The circuit shown in Figure 10.19c could be used for BIT on safety critical output circuits such as Release Consent. During BIT each output will be tested by first ensuring all switches (x, y and z) are open, then in turn demanding short 'on' states for switches y and z, ensuring BIT monitor 2 changes state each time. A short 'on' state is demanded for switch x while ensuring BIT monitor 1 changes state. This method exercises each switch element while ensuring no single fault could cause the output to become active.

10.2.4.4 Analog Network BIT The circuit shown in figure 10.19d could be used for BIT of analog network circuitry as required for the High Bandwidth and Low Bandwidth networks of MIL-STD-1760. BIT for these circuits is limited to monitoring the analog element drive signal.

10.2.4.5 Power Switch BIT The circuit shown in figure 10.19e could be used for BIT of power switches as would be required for 28V DC Power 1, 28V DC Power 2, 115V AC, Auxiliary 28V DC and Auxiliary 115V AC. BIT for these switches will be by monitoring the output voltage (AC or DC) to verify the correct state has been achieved.

10.2.5 Connectors

ISSUE: What guidance can be given for connectors to be used within the AIS?

GUIDANCE: Wherever possible external equipment connectors, that is those not used for the ASI, should be of a common type and conform to accepted standards, such as MIL-C-38999.

10.2.6 Connector Pin Allocations

ISSUE: What guidance can be given for the allocation of signals to connector contacts within the AIS not currently controlled by MIL-STD-1760, that is not the ASI?

GUIDANCE: The designer should ensure that all safety critical signals are surrounded by "Guard contacts" as shown in Figure 10.20. These "Guard contacts" are either kept at or close to ground potential or they are open circuit. This ensures that adjacent pin shorts within a connector cannot activate a safety critical signal into or out of a unit. Wherever possible signals capable of carrying high voltages or high currents should be separated from other types of signal preferably by routing them through separate connectors.

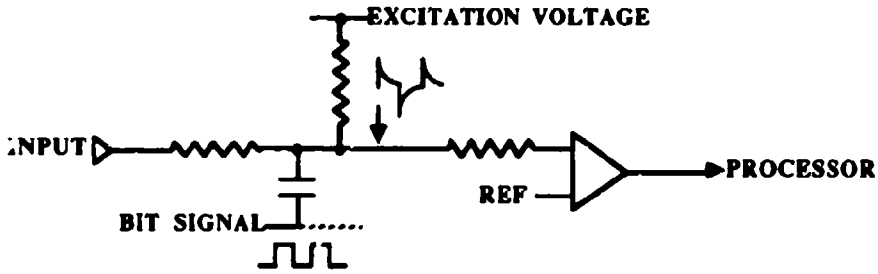

a. Discrete Input

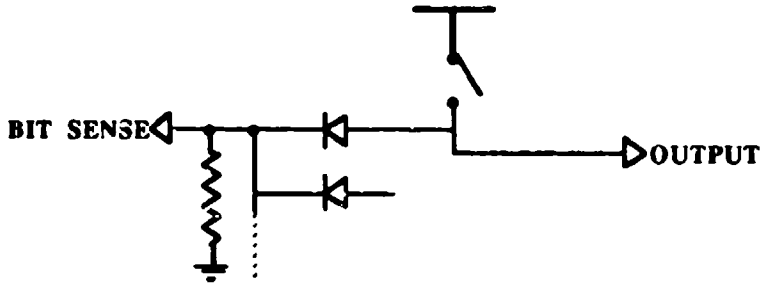

b. Discrete Output (Active High Output Shown)

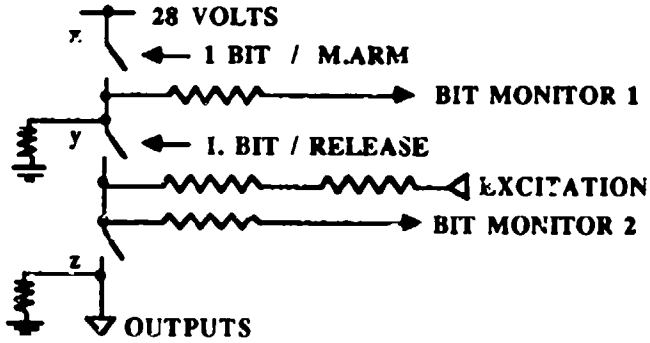

c. Critical Outputs

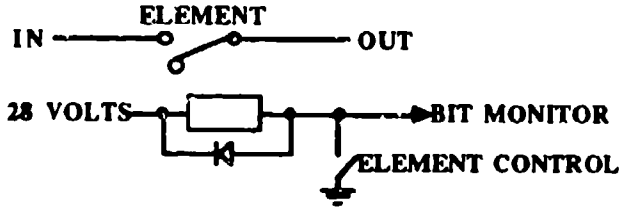

d. Analog Network

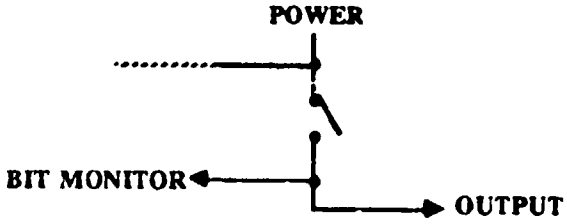

e. Power Switch

FIGURE 10.19 BIT CIRCUITS

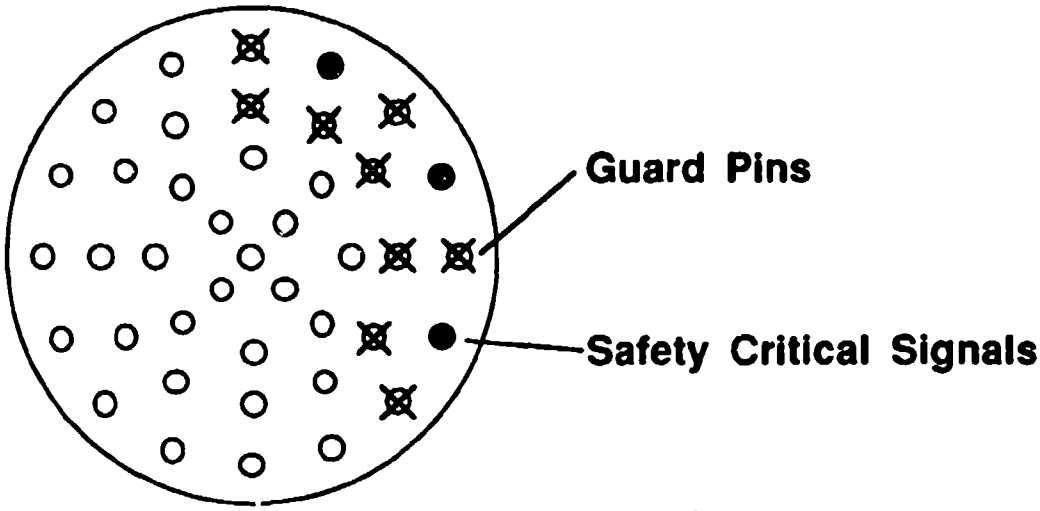

FIGURE 10.20 Use of Guard Pins

10.2.7 Physical Design of Equipment

ISSUE: What guidance can be given for the physical design of equipment within the AIS?

GUIDANCE: This is highly dependent on particular aircraft requirements and philosophies although the designer should ensure that wherever possible all circuitry associated with high current and voltages should be physically separated from other types of signal.

10.2.8 Electromagnetic Considerations (EMC, EMP, TEMPEST)

ISSUE: How is the design of the AIS affected by electromagnetic considerations?

GUIDANCE: The following guidance is offered for the signal types specified in MIL-STD-1760.

10.2.8.1 High Bandwidth (HB) Signals Triaxial cable should be used for all HB signal lines, the outer shield being terminated at a convenient point on the shell of the connector the signal is passing through. Voltage limiting devices should be used on the signal lines as they enter equipments to suppress any spikes or surges generated by Electromagnetic pick up in the wiring.

10.2.8.2 Mux Bus Voltage limiting devices should be used on these signals as they enter equipments to suppress any spikes or surges generated by electromagnetic pick up in the wiring. All black data being transmitted on the bus should be encrypted. Whenever a store has been released the stub routed to the associated ASi should be isolated to ensure that data cannot be radiated from the MSI connector on the umbilical.

10.2.8.3 Low Bandwidth signals Voltage limiting devices should be used on the signal lines as they enter equipments to suppress any spikes or surges generated by electromagnetic pick up in the wiring.

10.2.8.4 Release Consent Filter contacts should be used for those signals in the external connectors. Voltage limiting devices should also be used as described above.

10.2.8.5 Address Discretes The wire lengths used for these links should be kept to a minimum.

10.2.8.6 Power Filter contacts should be used on all the power interfaces.

11. SOFTWARE GUIDANCE

This section offers guidance for the implementation of the MIL-STD-1760 Logical Design Definition (LDD). Paragraph 11.1 discusses specific LDD issues, paragraph 11.2 discusses more general software issues important to the development of software [illegible] and paragraph 11.3 summarizes the overall benefits offered by the LDD to AIS software. This section is intended to be used by experienced software designers and managers. In many cases the following assumptions are made of the reader:

a. Experience of real time embedded system software
b. Knowledge of a High Order Language (HOL) such as Ada, Jovial or Pascal
c. Knowledge of general Stores Management System characteristics
d. Experience of MIL-STD-1553 protocol implementation in software
e. Good understanding of MIL-STD-1760 (refer to section 5)

11.1 MIL-STD-1760 LDD IMPLEMENTATION This paragraph considers the effects on the AIS software design imposed by the MIL-STD-1760 LDD. The guidance and rationale have an aircraft AIS emphasis and are concerned with both the low level software effects of the protocol required by the LDD and the effects on the application software imposed by the LDD. Where there are differences between the contracted June 1985 Draft Notice 1 LDD and the later Notices 2 and 3 then, where possible, guidance and rationale is provided for each issue, (denoted by Notice 1 and Notice 2/3). Where there are no significant differences, then a single set of guidance and rationale is provided, (denoted by Notice 1/2/3). Issues and guidance are structured to the same outline as the main LDD features described in paragraph 5. Specifically guidance is provided for the following topics:

- Overall LDD Impact
- Subaddress Allocation
- Store Identification
- Basic Protocol
- Coordinate systems
- Standard Data Formats
- Mass Data Transfer
- Power Up Sequence
- Data Check Algorithm
- Safety Critical Control and Monitor
- MIL-STD-1553 Option restrictions
- Entity Definitions
- Base Message Formats

11.1.1 Overall LDD impacts This paragraph offers high level guidance for the implementation of the LDD within an AIS.

11.1.1.1 Generic Software

ISSUE: Should the AIS implement a generic software solution applicable to the management of all MIL-STD-1760 mission stores or implement specific solutions tailored to each mission store type?

GUIDANCE: To maximize the benefits of the LDD in increasing interoperability and reducing software and integration costs, then every effort within the AIS software design should be made to develop generic software modules. This applies particularly in the following areas:

- Power Up Sequences
- Safety Critical Control
- Error Recovery
- Standard Message Building and decoding
- Store Determinations
- Error Determination
- Standard Data Entities

It is not possible, with the current limited scope of the LDD, to construct truly generic AIS software.

RATIONALE: Although the MIL-STD-1760 LDD does not mandate the structuring of generic subprograms for these key LDD areas, it is essential that provision is made within the software development cycle to consider structuring of effective generic subprograms, that is software units that handle protocols in a general purpose manner without requiring constant interface reviews. To realize the real benefits in terms of greater interoperability and reduced system procurement costs, the AIS must utilize generic software modules. These modules should be seen as primarily generic to many stores but specific to one AIS implementation. Clearly it will be possible to write software that is generic to many AIS implementations, but achievement of this will be more difficult and is beyond the scope of the immediate goals of MIL-STD-1760. Once an AIS implementation has embodied the recommended set of generic modules, then when a new store is added to the aircraft a relatively small amount of software should require change or new generation. This is shown in figures 11.1 and 11.2. Clearly in figure 11.2 more effort and time will be consumed and furthermore the confidence in the final software will be lower, because a higher proportion of unproven software will be utilized. These arguments are strongest in the area of safety critical control. As discussed later in 11.1.6 the designer should consider partitioning the software so that safety critical software is rarely changed and therefore repeats of lengthy software safety analyzes can be avoided. Should a non generic safety critical control module be used, then new modules will be required for each new store type each requiring a full and lengthy software safety analysis.

11.1.2 Power Up Sequence This section offers guidance for software designed to power up multiple mission stores.

11.1.2.1 Store Power-Up Timing

ISSUE: When should mission stores be first powered up?

BACKGROUND: Mission stores are entitled to flag errors if the power application is in the wrong order, or if incorrect time sequencing is performed. In some cases this could lead to a hang-up situation.

GUIDANCE: To enable store identification to take place, the aircraft must power up and interrogate the store well in advance of the store's possible employment. Wherever possible, this should take place when the aircraft is not airborne.

RATIONALE: Many AIS functions will be commanded over MIL-STD-1553 data links. By their time division multiplexing nature these links can be slow. The power application will frequently be performed by relays. These relays will require a finite turn on time, say 20 msec and the monitor cycle may take a further 20 msec. With the serial transfer time, each power source may require 50 msec for application and monitor. The first power source will be turned on after 30 msec giving a total available time of 120 msec for the transfer.

11.1.2.2 Reduction of power up time

ISSUE: Software design to minimize system configuration time from power up.

GUIDANCE Notice 1/2/3: The software design should ensure that, where power permits, all mission stores are powered up at the same time such that the busy times associated with initial power application can run concurrently. This will ensure the system is ready in the shortest possible time. A typical timing diagram is shown in figure 11.3.

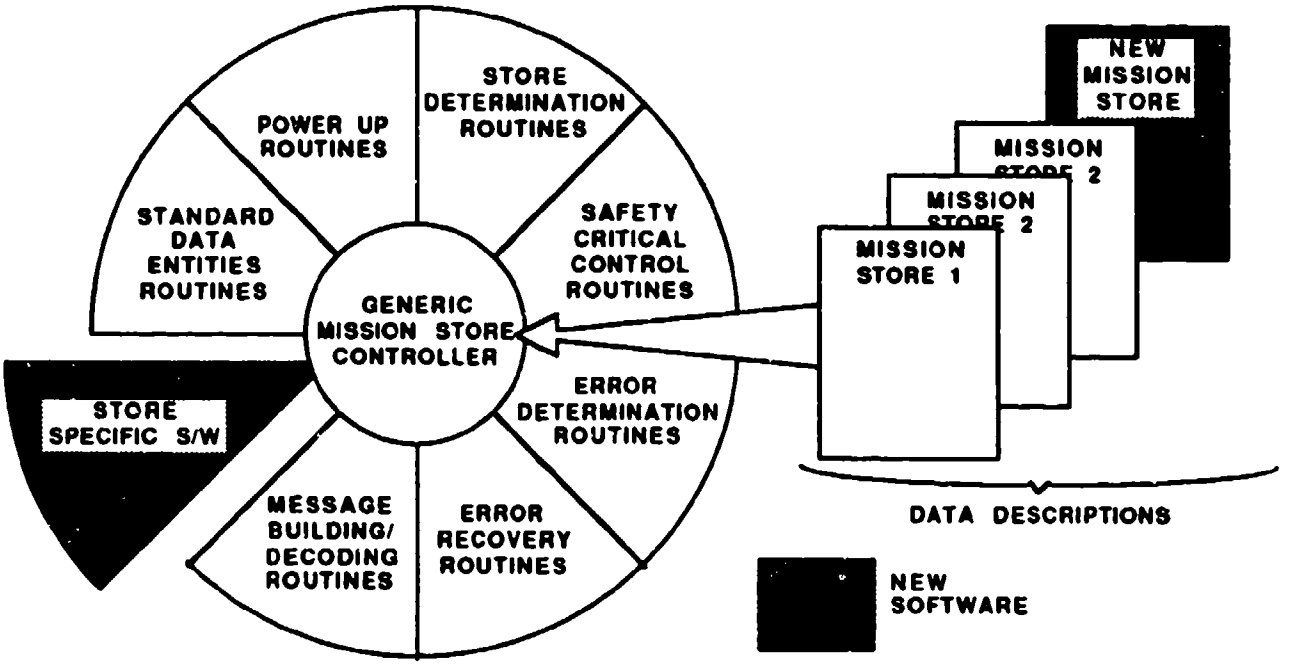

Notes: The generic mission store controller uses data representations of the mission store implementation to drive general purpose software to achieve specific LDD elements. However some specific software will be required.

FIGURE 11.1 Software Changes for New Store (Generic Software Structure)

RATIONALE Notice 1/2/3: Mission stores must complete the initial power up processing within 500 ms during which time they can be in a valid busy state. A sequential power routine where, for example 10 mission stores are to be identified, would take 5 seconds to complete thereby slowing down system readiness. This could prove critical for in flight power up after power failure.

11.1.2.3 Error Checking

ISSUE: What error checking should be made by an AIS during mission store power up?

GUIDANCE Notice 1/2/3: The mission store power up phase is considered to start with application of power to the store and end with either the successful receipt of a store description message by the AIS or the expiration of the 500 ms limit time. Additionally, a mission store monitor message should be scheduled at the point where it is available and valid (described in the ICD under Notice 3) to ensure the critical monitor word is clear and the checksum check is passed. During this phase the following checks should be made:

a. No detected power overload (such as by exception from continuous AIS BIT software)
b. MIL-STD-1553 response within limit time
c. No MIL-STD-1553 error (word count, bit count, parity etc)
d. Busy state removed within limit time
e. No service request/vector word combinations beyond AIS handling capability
f. Valid mission store monitor message checksum

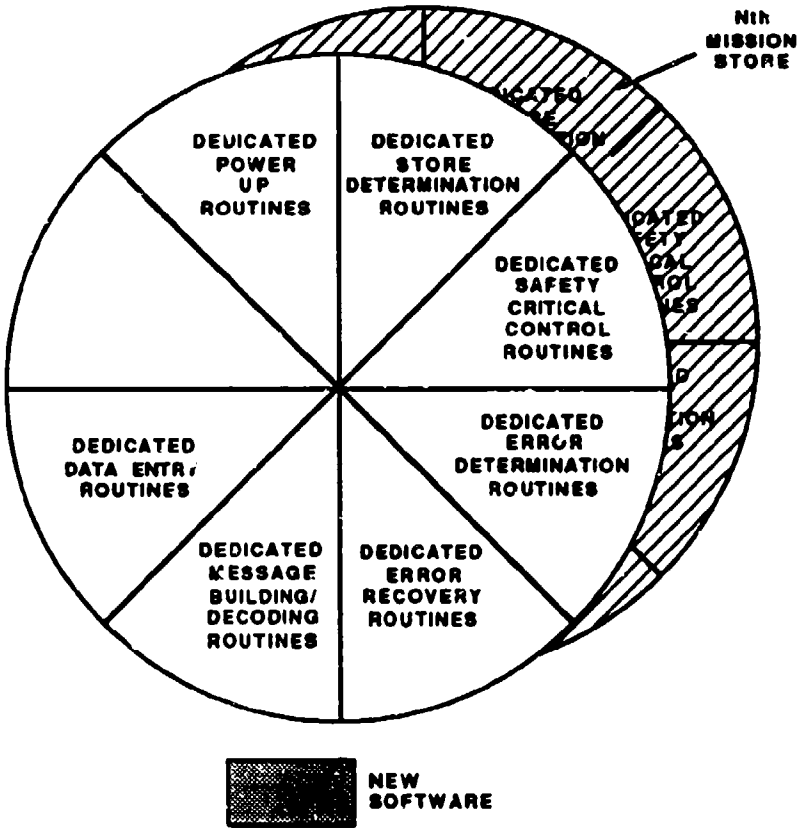

Note: Each routine is dedicated to a mission store type

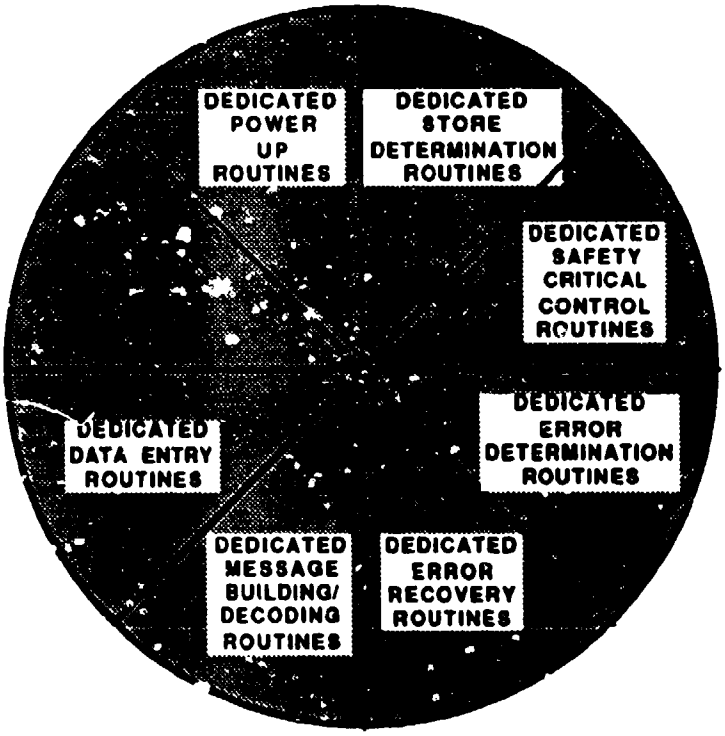

FIGURE 11.2 Software Changes for New Store (Non-Generic Software Structure)

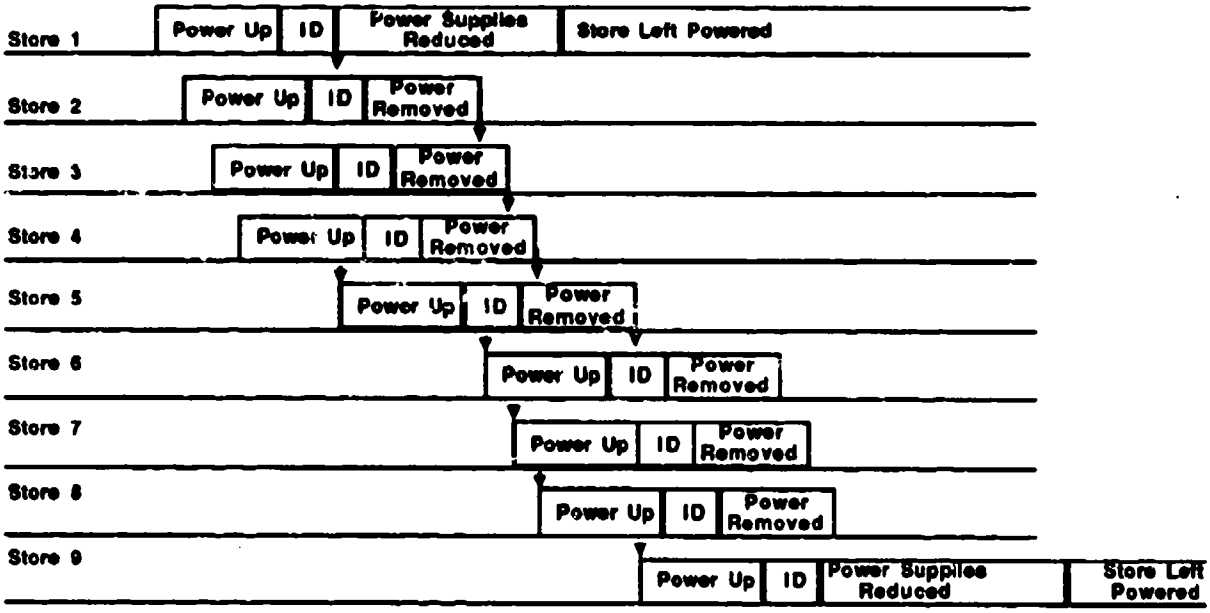

Note: Maximum of 4 stores fully powered at one time
ID - Store Identification

FIGURE 11.3 Power Up Timings

If the 500 ms valid busy time expires, the AIS should schedule a Reset Terminal Mode code. If busy is still set, schedule retries for 10 ms before failing the mission store. This is shown as a flow chart in figure 11.4.

RATIONALE Notice 1/2/3: Although the LDD specifies that the busy bit should be cleared within 500 ms of power up, a tolerance should be applied by the AIS to ensure that mission stores are not shut down without the AIS scheduling retries. The reset mode code will remove any recoverable latch up conditions in the store. If, during the mission store power up sequence, a non fatal error is detected the AIS must action the reported failure either by hanging the store or only allowing operation in a degraded mode.

11.1.3 Subaddress Allocation

ISSUE: Allocation of subaddress to stores and remote interface units.

GUIDANCE Notice 1/2/3: The AIS software should be designed to provide additional integrity checks to ensure that only subaddresses provided within the store interface (via upload notice 1, via ICD Notice 2/3) are used. Special care is required with the Safety critical subaddresses. These are 07 and 11 for Notice 1 and 11, 19, and 27 for Notice 2/3. Specific recommendations are:

a. Provide high integrity checks to avoid generation of messages to/from subaddresses reserved for NUCLEAR WEAPONS unless initiated by Nuclear certified software.

b. Provide high integrity checks such that all messages to subaddress 11 (critical control) have a low probability of either inadvertent generation or inadvertent command of an undesired critical state with a correctly formatted critical authority word.

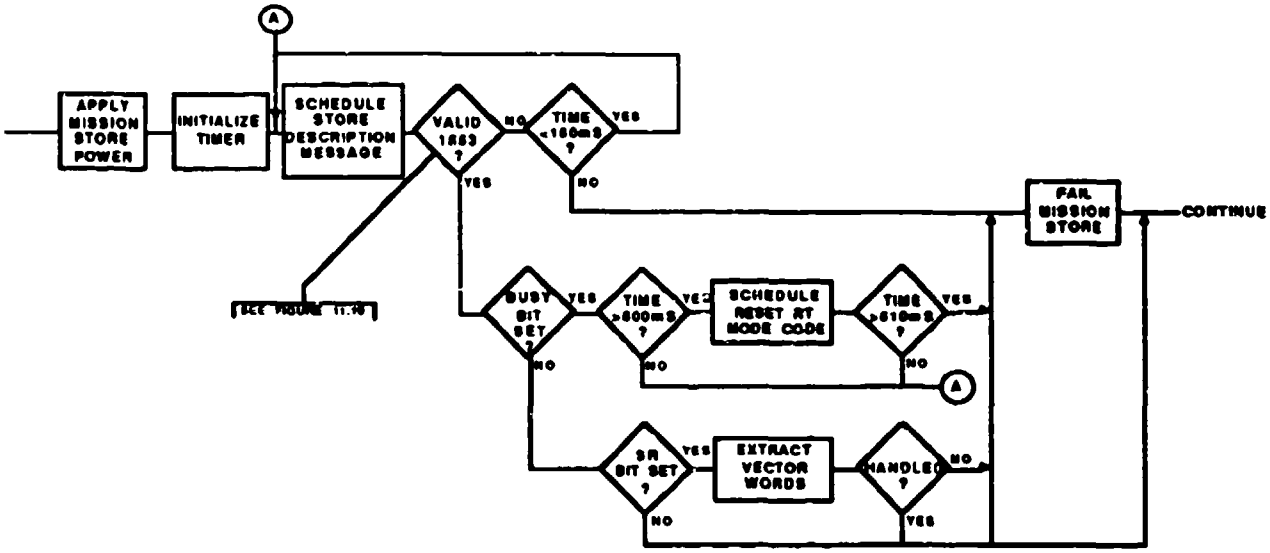

FIGURE 11.4 Power Up Flowchart for one Store

As discussed in section 10, these checks can be embodied into the MIL-STD-1553 Bus Controller firmware as well as the AIS software. It is likely that some standard MIL-STD-1553 modules for integrated racks will not implement suitable firmware checks. In these cases, a double check will have to be implemented in the AIS software. As this may not be an easy task it is recommended that consideration is given to AIS requirements when designing "standard" MIL-STD-1553 hardware.

RATIONALE Notice 1/2/3: Provision is made by the LDD for predefined subaddress allocation (for example subaddress 11 for safety critical control and monitor messages) leaving a wide range of user definable messages. The AIS software and firmware will have knowledge, for each store determined to be present, of the implemented and critical subaddresses and can provide an integrity check before the transaction request is accomplished.

11.1.4 Data Check Algorithm

11.1.4.1 Checksum Generation Point

ISSUE: Should the checksum generation be implemented in software?

GUIDANCE Notice 1/2/3: Implement the AIS checksum generation and checking in software. This may be either the AIS software or MIL-STD-1553 Bus Controller firmware if that is switchable (on/off and algorithm) by the AIS software.

RATIONALE Notice 1/2/3: Although the LDD checksum can be implemented in hardware the flexibility of the software implementation should be exploited particularly when interfacing with either mission stores not implementing a checksum on specific subaddresses or an existing store (for example AMRAAM) which does not implement the LDD checksum but uses another algorithm. The LDD data check algorithm is readily implemented in any 16 bit computer or microprocessor ISA. The main instructions required are 16 bit exclusive OR and 16 bit logical rotation. Where a microprocessor does not feature a logical rotate this can be effected by using the following "instructions" (shown here on register A).

```
BEGIN     ADD A to A
          JUMP IF NO CARRY to END
          INCREMENT A
END
```

A coding for implementing checksums in MIL-STD-1750 assembler is shown below. For a 32 word message, encoding time is about 120 uS maximum.

```
Start   LIM     R3,1          ; define shift left (FF or OF = shift right)
        LIM     R1,mm         ; load with number of message words, (not including
                              checksum word)
        LIM     R12,nn        ; with address of message word 1
        XORR    R2,R2         ; clear R2
Code 1  XOR     R2,O,R12      ; Modulo 2 summing
        SCR     R2,R3         ; shift left
        AISP    R12,1         ; increment word address
        SOJ     R1,Code 1     ; decrement word count + JNZ
        STB     R12,O         ; store checkword in last word
```

11.1.4.2 LDD Checksum Computation

ISSUE: What are the effects of computing the LDD Checksum?

GUIDANCE Notice 1/2/3: Where possible implement the checksum algorithm in the MIL-STD-1553 Bus Controller firmware. As discussed in paragraph 11.1.4.1, this would be repeat single word algorithm of some 3 x 16 bit microprocessor instructions. The algorithm would be inserted in the time available, between interfacing with the MIL-STD-1553 protocol hybrids, during data transmission.

RATIONALE Notice 1/2/3: Software interfaces with MIL-STD-1553B protocol hybrids will generally be through assembler level instructions. Within the Ada programming language there are no suitable constructs to generate efficiently the LDD checksum required for specified messages. Implementation in firmware frees the application message building software from computing the checksum. It should also be noted that where system time is embedded within a message, then the checksum would be best latched in at transmission time, in order to avoid excessive compensation processing at the moment of building / queuing. This would require the computation of a checksum at transmission time.

11.1.5 Store Identification

11.1.5.1 Use of store description protocol

ISSUE: What effects upon software design are imposed by the store description protocol?

GUIDANCE Notice 1: The AIS should follow the extraction protocol and data flow shown in figure 11.5 to determine which TX subaddresses and which RX subaddresses have been implemented. The message implementations, provided as data entity codes, should be stored in a flexible data structure. An example data structure is provided in figure 11.6. The information held about mission store message implementation can then be used by general purpose message building and decoding modules, which use the data entity code to access an entity data base. It will be necessary for the software designer to include store specific software which knows in which context the implemented messages are required. Care should be taken within the resulting data

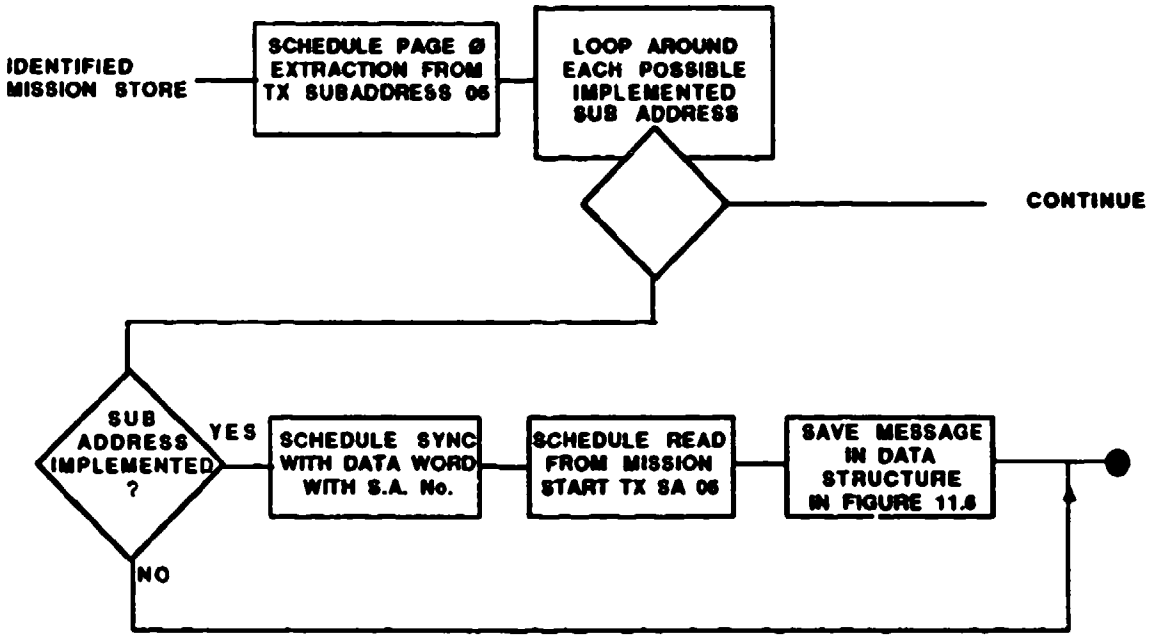

FIGURE 11.5 Notice 1 Subaddress Processing

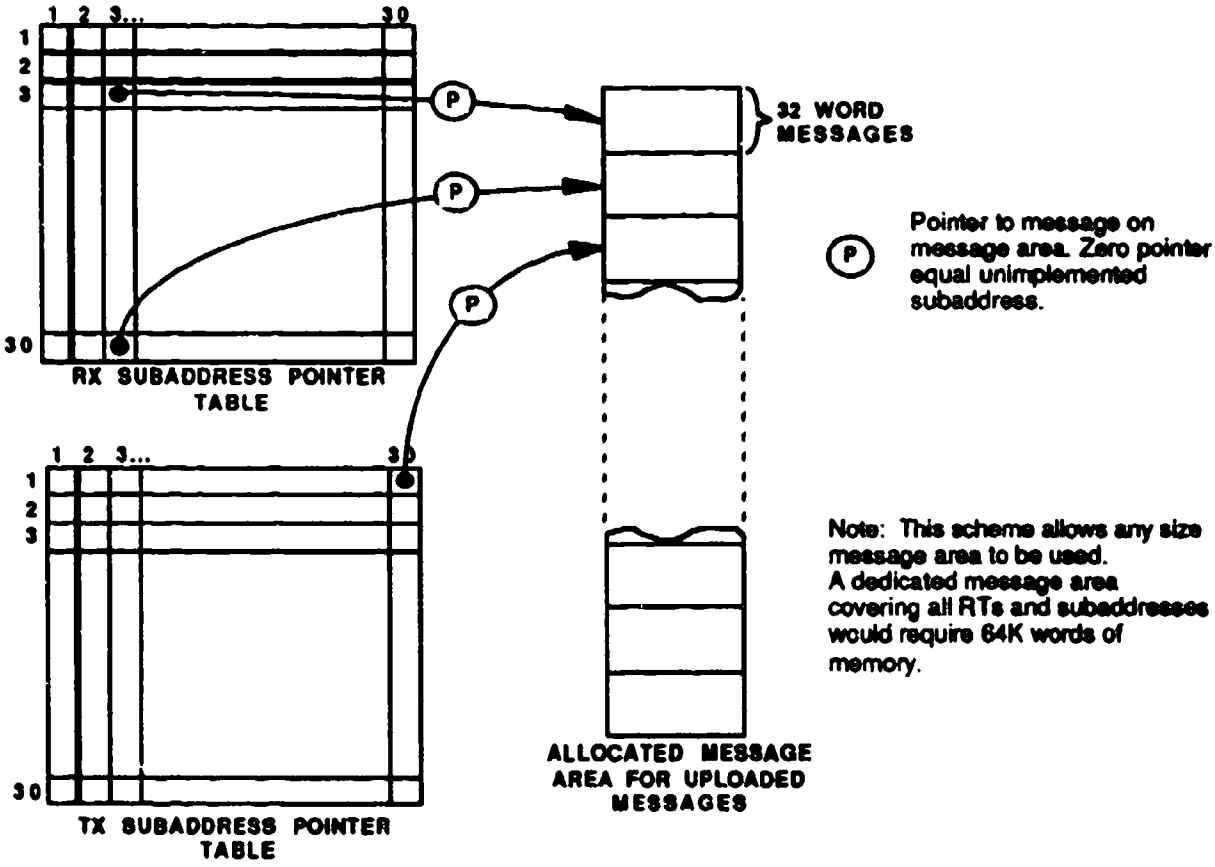

FIGURE 11.6 Data Structure

base design to allow storage capacity for multiple data of the same entity type, such as multiple targets, where each would use the same entity code.

RATIONALE Notice 1: The use of data entity codes to describe message structures allows the development of general purpose modules to build messages for transmission to stores and decode incoming store sourced messages. These generic modules can only be effectively developed if they have access, using the unique data entity code, to an entity data base. A purely generic design is not possible as no information is supplied from the mission store about the context of each declared message. Overlaying data onto the same entity code requires consideration during the entity data base design and access efficiency is particularly important, because the message building/decoding modules could be frequently executed and any excessive delays or processing requirements would then adversely effect AIS performance.

GUIDANCE Notice 2/3: Represent the Mission Stores ICD in a suitable data structure in such a manner that general purpose message building and decoding modules can be used. Here the ICD defines the use of standard data entities instead of the Notice 1 store description upload. Care must be taken, because with Notice 3 there is scope for the use of non standard data entities.

RATIONALE Notice 2/3: Notice 2/3 LDD allows implementation of user definable subaddresses to be described by a mission store ICD instead of being loaded from the mission store. To meet the goals of reductions in software and system integration cost on aircraft programs, it is important that the aircraft software design solution provides generic subroutines which can be used for message building/processing and data word formatting and decoding. Excluding user definable data words, which can be included in a stores ICD under special conditions provided by the standard, these routines can be developed for the standard data entities and called from a generic mission store control module(s) which uses ICDs represented by a standard data structure.

11.1.5.2 Inventory Data Base Structure

ISSUE: How should the AIS inventory data base be structured to best use the store description data?

GUIDANCE Notice 1/2/3: Provision should be made within the inventory data structure for the direct inclusion of the Country Code and Store Identity or ASCII string words (Notice 1). Standard software modules should be capable of decoding these three store description parameters to determine the exact store type. The inventory structure should be capable of dealing with any mission store for which interface details are known (through Mission Store ICD under Notice 2/3) for any pylon station. The structure of this inventory data should then be used for selection of specific stores following store type selection requests.

RATIONALE Notice 1/2/3: These store description parameters are the only information provided to determine the interface requirements of a mission store. Standard routines should be developed that can identify the store and then dynamically configure the system inventory accordingly. This is essential if the AIS is to configure its control structures on uploaded information which then reduces the requirement on the ground crew to load in the inventory. This potentially increases aircraft readiness times.

11.1.6 Safety Critical Control/Monitor This section offers guidance on the way the AIS should manage the safety critical data, what additional software interlocks can be provided and the best way to structure the software to use the safety critical states provided.

11.1.6.1 Usage of Standard Software

ISSUE: Can standard safety critical software for control of Mission Stores be used?

GUIDANCE Notice 1/2/3: The standard safety critical message and word structure lends itself to the development of dedicated software modules where few changes would need to be generated and validated. The designer should ensure that standard software modules are used in the AIS to build and decode safety critical messages.

RATIONALE Notice 1/2/3: In addition to the benefits in critical software reduction offered by standard routines, containing all critical message processing in one module offers advantages in the software validation and verification activities required to prove safety critical software control systems.

11.1.6.2 Software Structure

ISSUE: What software structure should be used for safety critical processing?

GUIDANCE: Safety Critical processing should be structured to partition safety critical software from non safety critical software where possible and always separate the computation of critical authority codes from the generation of critical control words. This approach is shown in figure 11.7. Here the AIS processing is separated into four elements:

a. Non critical software associated with targeting data, aircraft data, inventory and other functions. The end user may wish to frequently change the precise functionality in these areas. Software verification and validation will be required, but no special Safety Critical analysis will be required.

b. Safety critical software associated with determining the critical state of the store. As specified in paragraph 8.2.2 these states are highly dependent on the critical switch inputs. There is a relatively infrequent need to modify this software, because of the generic nature of this function. Therefore, although any modification would require a lengthy and detailed software safety analysis, it will rarely delay implementation of a new store on the aircraft and contribute little to life cycle cost. The output from this software will be the critical control messages for the mission stores and similar messages to control remote AIS equipments. To prevent a single processing failure from being capable of initiating a critical event the safety critical software should not contain the algorithm for computing the critical authority data words. Because the Mission Store, and remote AIS equipments, will check for the correct authority code to match the critical control state demanded, this software package alone cannot initiate critical action.

c. Codes Processing function - This is a simple software or firmware function. It receives the critical switch inputs to the AIS and computes from them only those critical authority code combinations that are potentially valid. For example if Master Arm is not live then any authority code associated with arming commands would not be computed by the codes processing function. The codes processing function also determines which critical control formats are valid (allowed states) for the detected states of the critical inputs. For example if Master Arm is not live then D7, D8 and D10 of the Critical Control Word would not be allowed. The codes processing cannot initiate a safety critical message and therefore a single processing failure cannot cause a safety critical event.

d. Bus Controller firmware - As previously described in paragraphs 10 and 11.1.3, the Bus Controller firmware executes certain checks on critical message transfer. For mission store control messages, the Bus Controller firmware executes the following sub functions:

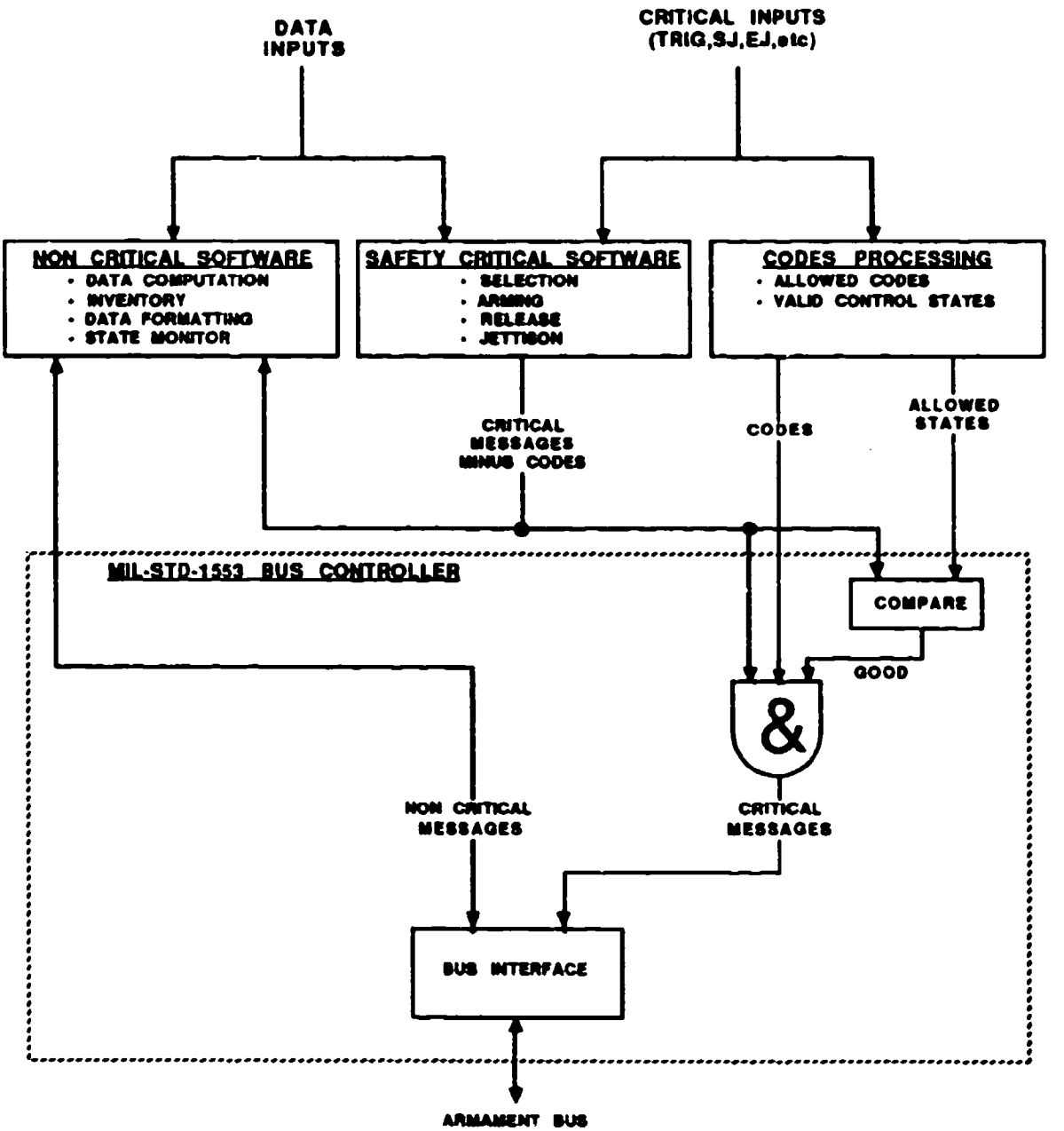

FIGURE 11.7 Separated Safety Critical Processing

- Combination of data output from the Safety Critical and codes processing functions

- Inhibition of the message if Safety Critical processing output does not match the allowed critical states output from the codes processing

- Channeling of safety critical and non critical message demands onto the same MIL-STD-1553 Bus

Since the Bus Controller firmware contains neither the critical control message format nor the critical authority code algorithm, a single processing failure will be unable to initiate an executable safety critical message. The term "separated," as applied to this processing, is subjective and needs further guidance. One extreme position is where the four processing elements are implemented as four separate equipments. This is rejected because any separation into different equipments would add cost and weight. Also this would be pointless, because for safety reasons the interfaces between the equipments would require extensive software design verification and analysis. Another extreme position is for all the processing to be executed in the same processor. These would be separate tasks separated only by the tasking implementation. With such an implementation, it would be extremely difficult, or even impossible to demonstrate that no single failure could initiate a safety critical action. The recommended solution is a compromise between these two positions and provides high performance and safety with minimum cost and weight penalty. The recommendations are, in order of importance:

- The safety critical processing and codes processing must be executed on separate processors with fully verifiable independent design and compilation.

- The Bus controller software should be implemented as a function, executed, designed and compiled separately from the safety critical processing. Where this is not possible, such as if a standard MIL-STD-1553 module is mandated, then this software should be executed on the same processor as the safety critical processing, but should be separately designed and compiled.

- The non safety critical software must be designed and compiled separately from the other software. It may be executed by the same processor as the safety critical software, but ideally a separate processing module should be used.

11.1.6.3 Usage of Monitor Messages

ISSUE: How should the AIS use safety critical monitor messages?

GUIDANCE Notice 1/2/3: After any aircraft initiated change of the Store Critical State, a monitor of successful attainment of the demand should always be scheduled. Sufficient time should be allowed to enable the mission store to attain the demanded state.

RATIONALE Notice 1/2/3: Safety critical controls require a higher degree of integrity checking than other mission store controls. Any change in the mission stores safety critical state, which can only be initiated by the safety critical control message, should always be checked to prevent further safety critical state changes being initiated until the current state is attained. If the state is not attained within the expected time, or an incorrect state arises, then a re-sequencing of the safety critical state can be attempted. Persistent failure to attain a demanded state can then result in the mission store being shut down. Demanded state attainment, within mission stores, may require the activation of some devices which could take a considerable time to become active. For example, a relay may be used to switch a safety critical signal and account should be taken of the settling time, typically 20 ms, before monitoring for successful attainment.

11.1.6.4 Software Design for State Control

ISSUE: What software design is required to support safety critical state control?

GUIDANCE Notice 1/2/3: The mission store critical state control should be implemented in the AIS software. As described in 11.1.6.2 this software should have three portions:

a. AIS safety critical software, to generate MIL-STD-1760 mission store control message data, excluding critical authority codes.

b. AIS firmware to generate allowed critical authority codes.

c. AIS MIL-STD-1553 Bus Controller firmware, to check allowed codes against demanded states, insert codes in messages and recompute checksums.

This paragraph considers the safety critical software. Specific guidance points are:

a. Use interrupts as the mechanism for detection of relevant critical switch changes. This will reduce response times.

b. Reverify critical inputs, at interrupt scheduled critical input processing modules.

c. Avoid the use of Ada exceptions.

d. Implement safety critical software, not as one generic package, but rather as a set of generic software modules spread over a multi-layered structure. The lower the layer, the more generic, to stores and different AIS functions, the software can be. Successively lower layers should implement the following functions:

High level state determination
Mapping of high level state to MIL-STD-1760 states
MIL-STD-1760 State sequencing
MIL-STD-1760 critical data formatting

e. Use finite state control, see paragraph 11.1.6.5, for critical state determination.

11.1.6.5 Software Design Techniques

ISSUE: What software design techniques should be employed for critical state control?

GUIDANCE Notice 1/2/3: Exploit finite state design for mission store control. Map other control requirements, for the mission store and the release and suspension controls, to the available safety critical states.

RATIONALE Notice 1/2/3: The safety critical states offered by the safety critical control word are natural release sequence states and lend themselves to the development of a finite state machine at the heart of the AIS software design. This is a proven and reliable method of control system software design. As the AIS controls mission stores through the release cycle, other message activity is required, such as the transmission of targeting messages to slew a missile seeker head to the sensed target position. Matching these message path controls to the safety critical states, allows full mission store control and release using one general purpose finite state controller. The other mapped controls, should be described in a suitable data structure, available from dedicated mapping (Notice 1) or held ICD data structure (Notice 2/3) and passed as a parameter to the generic finite state controller for each particular store type.

11.1.7 MIL-STD-1553 Option Restrictions MIL-STD-1553 provides many optional features. These allow significant design freedoms but reduce the scope for generic implementation of hardware and software. This is acceptable for general avionics purposes where a fixed set of equipments are present. MIL-STD-1760 provides a more dynamic environment with different

stores fitted for different missions. Accordingly, many of the MIL-STD-1553 options have been restricted (particularly in status and mode code usage) and these restrictions give scope for more generic AIS software implementation.

11.1.7.1 Status Word Bit Effects

ISSUE: What are the effects on software design of each status word bit either having a specified use or not being permissible to use?

GUIDANCE Notice 1/2/3: Common status word bit handling routines should be implemented at the MIL-STD-1553 level of software control. These are best implemented in the Bus Controller firmware. Specific to status word bit guidance is included in paragraph 11.1.8.

RATIONALE Notice 1/2/3: This exploits a major LDD benefit where every mission store implements a status word bit in exactly the same manner. If these routines are used at the interface level, within the software control, then the software size requirements, reliability and verification capability are all improved.

11.1.7.2 Mode Code Effects

ISSUE: What are the effects on software design of restricting the number and use of mode codes?

GUIDANCE Notice 1/2/3: The mode codes should be considered in two groups. First, there are the Mode Codes with associated data, for example sync with data and vector word. Because these transfer data, they must be managed by the AIS software and only part processed by the MIL-STD-1553 Bus Control firmware. Note that the timing use of synchronize with data may force either logging of precise time of generation (Notice 1) or insertion of precise time (Notice 2/3). The degree to which the software/firmware for these modes codes can be generic is limited. The second group are those mode codes which have no associated data and which relate to the management of MIL-STD-1553 data flow. Because the AIS can be assured of their embodiment in stores, generic software can be generated to effect error recovery. This software should mostly be implemented as MIL-STD-1553 Bus Control firmware. Specific information related to mode code usage is shown below in Table 11.1.

Table 11.1 Mode Code Usages by AIS

Mode Code	AIS Use	Software/Firmware
Transmit Status	None	-
Transmitter Shutdown	Clear unreliable bus	Software
Override Transmitter Shutdown	None	-
Reset Remote Terminal	Clear no response conditions	Firmware
Transmit Vector Word	See 11.1.8	Software
Synchronize with Data	See 11.1.8	Software
Transmit Last Command	None	-

11.1.8 Basic Protocol The MIL-STD-1760 LDD (notices) contains a number of features identifiable as protocol. These are listed below, together with the paragraphs of this Appendix that address their impact.

Communication Rules	Sections 9,10, and 11
RT Address	-
Subaddress restrictions	11.1.3
Mode Command Restrictions	11.1.7.2
Status Word restrictions	11.1.8
Protocol Checks	impacts store only
Checksums	11.1.4, 11.1.8.2, and 11.1.8.10
Execution Times	impacts store only
Service Request use	11.1.8.1
Service Request Servicing	11.1.8.1
Vector Word demand	impacts store only
Mass Data Transfer	notice 3 only
Carriage Store Routing	no applicability

This section therefore offers guidance for the software design resulting from, the basic LDD protocol related to the use of the MIL-STD-1553 vector word and status word responses from mission stores. These status word responses will either result in, the scheduling of further message transactions to determine more detail of the possible failure and/or the scheduling of retries to clear an error condition. The service request bit, subsystem flag bit and busy bit are specifically considered.

11.1.8.1 Vector Word Effects

ISSUE: What are the effects upon AIS software design caused by the extraction of vector word(s) after the raising of service request bit by the mission store?

GUIDANCE Notice 1: The LDD protocol handling software should clear all outstanding service requests via the vector word extraction protocol. Figure 11.8 shows a service request protocol flow diagram. By using such a standard module implemented in low level software or firmware, the higher level processing software does not have to deal with the scheduling of the required acyclic transactions. If the error condition can be dealt with locally, for example a checksum failure, then it should be cleared and logged at this level, again protecting the calling software.

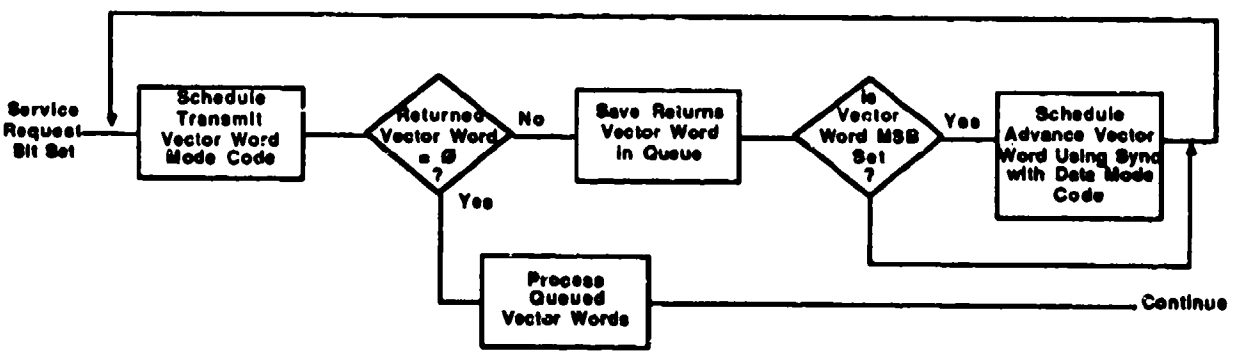

FIGURE 11.8 Service Request Protocol

RATIONALE Notice 1: The scheduling of the error determination acyclic transactions and the subsequent error recovery acyclic messages, if implemented, at the application message processing level, would limit the use of generic procedures in the software design. This is most evident in dealing with service request responses for cyclic transmissions running

asynchronously to the main acyclic control message building/transmitting software. A common low level routine for handling extraction, logging and recovery actions reduces the size and increases the reliability of AIS software.

GUIDANCE Notice 2/3: The single vector word should be extracted at the message transmission software level. Processing of the contents, specified by the Mission Store's ICD, should, where possible, be handled at this level.

RATIONALE Notice 2/3: See Notice 1 Rationale.

11.1.8.2 Checksum Failure Recovery

ISSUE: What are the effects upon AIS software design in holding the last two transmit messages for a mission store to ensure recovery from a checksum failure?

GUIDANCE Notice 1: The software data structures for message transmission processing, require careful design such that an effective buffering mechanism is provided. This mechanism can cater for holding the current RX message and the previous RX message for each Mission Store. This is best achieved by referencing each Mission Store by its RT address. Access to the buffering mechanism should be as efficient as possible as otherwise it will have an adverse effect upon the intermessage gap time(s) during attempted error recovery. A possible buffering scheme is shown in figure 11.9

RATIONALE Notice 1: Upon detection of a checksum failure (reported via service request vector words) the AIS software has to be capable of retransmitting the message that produced the checksum failure and the message that yielded the status word response (this message having been discarded by the store because its service request bit was high). It is important for the controlling data structure to be able to provide this message holding for all available RTs, as other transactions to other terminals may have been scheduled before the service request is acknowledged by the AIS. Access efficiency is particularly important for maintaining good intermessage gap times during error recovery. The faster the error conditions are cleared the quicker any other queued messages can be serviced.

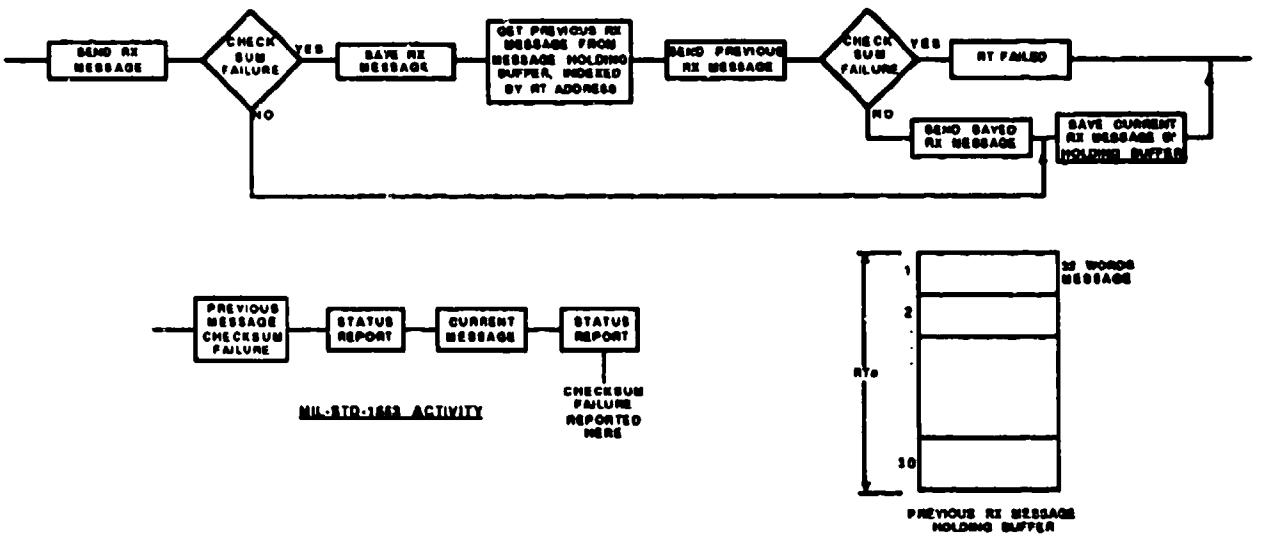

FIGURE 11.9 Checksum Error Recovery (RX messages)

GUIDANCE Notice 2/3: Checksum failures are not reported by the use of service requests but by polling, as necessary, a dedicated Protocol Status word in TX subaddress 11 (see paragraph 11.1.8.10). There is therefore no possibility of restricting the message backlog to two messages and no guidance is given.

11.1.8.3 Error Management

ISSUE: What are the effects on software design, of creating a suitable error management procedure to process the various flags embedded in the extracted vector word to form a complete service request?

GUIDANCE Notice 1 (general): Ensure that the software is designed with a common subroutine module for vector word processing, which can translate the flags and action the requests. Specific guidance for each bit or bit field is provided below.

RATIONALE Notice 1 (general): The benefits of reliability, memory reduction and the protection of upper level software, from low level protocol issues, are gained by a low level generic vector word translating module.

11.1.8.3.1 Specific Guidance for Notice 1

GUIDANCE Vector Word F2: See 11.1.8.4

GUIDANCE Vector Word F3: Ensure the software can reschedule a retry of the message yielding the checksum failure (as in section 11.1.8.2) and can shut down a store on successive checksum failures.

RATIONALE Vector Word F3: Upper level application software is protected from recovery scheduling. The probabilities of two successive message failures, over the MIL-STD-1553 data bus, are so remote that this event can be interpreted as a complete mission store failure.

GUIDANCE Vector Word F4: The upper level application software should deal with a critical authority failure by, applying a safety critical reset to the Mission store and then resequencing the mission store to its current safety critical state. If this action still yields safety critical control authority errors, then the mission store can be considered to be unsafe and should be shut down and declared 'hung'.

RATIONALE Vector Word F4: Retries are necessary to ensure a functional Mission Store is not shut down. It is best to resequence the mission store through the safety critical states to its current operational state, to ensure that any sequencing failures are corrected. Persistent critical authority failure means that, either there is a serious error either within the mission stores checking mechanism or the aircraft's critical code generation is not functioning. In either case, the mission store should be considered unsafe and should be shut down.

GUIDANCE Vector Word F5: For operational flight software, ensure that the message yielding the sequencing error is rescheduled. If a subsequent sequencing failure occurs, ensure the mission store is shut down.

RATIONALE Vector Word F5: If after system development and integration have been completed a sequencing error is flagged, then because the correct sequencing would have been established during development a fault condition exists. Rescheduling the control message that yielded the sequencing error will allow the survival of an intermittent fault.

GUIDANCE Vector Word F6: If there are no regular transmissions of all of the mission stores data set, then ensure all messages that contribute to the mission stores data set are retransmitted acyclically as soon as possible.

RATIONALE Vector Word F6: Data Set consistency should be maintained and if the stores data set is not refreshed regularly, the AIS software should schedule the retransmission of all messages associated with the data set as fast as possible.

GUIDANCE Vector Word Codes: Ensure that the reported missing signal(s) are applied, or reapplied, where possible. Persistent reporting should result in mission store shut down.

RATIONALE Vector Word Codes: If the mission store determines a signal, or signal set, which is under direct control of the AIS software is missing, then it should be applied or reapplied. Mission stores should only be shut down if they cannot function without the signal.

11.1.8.3.2 Specific Guidance for Notice 2/3

GUIDANCE Notice 2/3: Design the software to be capable of using information from bits within the vector word (which are valid if the format flag is logic 1). These must be interpreted using the AIS held ICD data.

RATIONALE Notice 2/3: The system designer has the freedom to allocate bits within the vector word. The definition of these bits is held within the ICD which must be represented by a data structure in the AIS software. To reduce the amount of software and allow some of the vector word processing to be contained at the message handling level, it is important to access the ICD to translate the used bits into meaningful software constructs to be processed at a higher level.

11.1.8.4 Asynchronous Message Scheduling

ISSUE: How should the AIS software implement scheduling of asynchronous message transactions requested from a mission store?

GUIDANCE Notice 1: The aircraft software must be capable of responding to the request reported in a vector word in the cases of:

a. A RX request - Build the message from the described subaddress by calling message build routines (refer to 11.1.5.1) which use standard data entities as described in the upload message description of the specified subaddress and then activate an acyclic transmission of that message.

b. A TX message request - Schedule an acyclic request for the specified subaddress and then process each returned data word. Again using the message description taken at upload to interpret store defined message formats. Particular attention should be paid to acyclic requests to transmit subaddress 11, as this may indicate a serious store problem.

RATIONALE Notice 1: Due to the intimate relationship between message uploaded descriptions and message building/decoding, then the software structure must allow access to the associated data structures from the vector word processing module.

GUIDANCE Notice 2/3: The AIS software should complete its current message processing before scheduling the requested transaction. Common message building and decoding routines, that use

the mission stores ICD to deal with the request, should be activated. The transaction controlling software should ensure that the requested data word count is supplied.

RATIONALE Notice 2/3: The mission store has to hold the formatted TX subaddress ready even while other transaction continues. During a state change sequence, it is better for the controlling software to complete the current task rather than respond instantly to deal with asynchronous request. Note that the Notice 3 LDD allows the mission store to determine the asynchronous word count.

11.1.8.5 Sub-system Flag Response

ISSUE: How should the AIS software respond to subsystem flag bit time 17?

GUIDANCE Notice 1/2/3: Ensure that the subsystem flag, if set, is valid by scheduling a Reset Terminal Mode code in response to the flag. Only proceed with associated subsystem flag processing if the subsequent status word yields the subsystem flag again. The AIS application software should attempt to determine if the failure is "fatal" or tolerable. For notice 1 LDD, the AIS should extract the BIT LOG and act on this data (see 11.1.8.6). For notice 2/3 LDD the subsystem flag indicates "total loss of store function" and the store should therefore be set as failed and all power and discrete signals deactivated.

RATIONALE Notice 1/2/3: The aircraft response to the subsystem flag will probably result in the store becoming unavailable. This could be critical to mission success and it is therefore vital that the controlling software only reacts to a subsystem flag definitely raised by the mission store. The Reset Terminal Mode code is the best method of ensuring that the flag has not been raised as a result of a temporary mission store failure, because it ensures that the Mission store RT is reset by hardware.

11.1.8.6 Built in Test Log (BIT LOG) Extraction

ISSUE: How should the AIS software implement BIT LOG word extraction?

GUIDANCE Notice 1:

a. Ensure that after store identification (see 11.1.5), the position of the BIT LOG word, data entity code 01FE is saved (in terms of the TX subaddress number in which it is implemented and the data word position within this message) in such a way that the generic subsystem handling software can, if required, automatically schedule an acyclic request for the BIT LOG data word

b. Following a confirmed detection that subsystem flag is set, (see 11.1.8.5) the AIS application software should extract the BIG LOG data from the store

c. The BIT LOG word processing should ensure that the AIS can respond by, either allowing a degraded mission store operation or by failing the store and automatically selecting another store of the same type (if one exists within the inventory). Typical criteria for declaring the store failed are; inability to extract BIT LOG data or the BIT LOG data indicating a mission vital function is unavailable, for example targeting.

d. Where the BIT LOG indicates an unsafe condition, the AIS should remove all power, declare the store as hung and alert the aircrew, via the avionics interface, to the potential hazard. Examples include store overheating or critical circuits unsafe.

RATIONALE Notice 1: The Mission store has the freedom of positioning the BIT LOG word, associated with the subsystem flag word, in any data word position in any user definable TX subaddress. As the aircraft has to extract the BIT LOG word in response to a valid subsystem flag (to determine the seriousness of the subsystem failure allowing possible degraded modes or hanging) then upon initial upload the position should be saved in some suitable data structure. This applies to each Mission store implementing a BITLOG word, such that a generic low level subsystem flag handling routine can extract the BITLOG word. The upper level application software processing paths should only have to respond to a hung, or degraded mode state, and not the scheduling of BIT LOG extraction.

GUIDANCE Notice 2/3: None offered, as subsystem flag is always translated as fatal mission store failure. No BIT LOG word is required to be extracted when subsystem flag is set nor is there a standard BIT LOG format provided. It is possible, that some store unique processing could be implemented.

11.1.8.7 Busy Bit Management

ISSUE: How should the AIS implement Busy bit management?

GUIDANCE Notice 1: Ensure that the software is designed such that, communication with a mission store during the known busy time does not occur. This should be implemented in the lower level AIS software/firmware by ensuring that:

a. Where multiple mission stores and other bus users, such as AIS remote equipments, are receiving/transmitting data, then messages are interleaved and not grouped "back to back" for each RT address

b. Where one mission store dominates the current bus traffic, then a minimum intermessage spacing should be introduced. This could be calculated from the store busy time, available from the store description (see 11.1.5). As this would be complex to implement, then a basic default time of 1 mS should be used.

c. Always use the maximum busy period specified (at power up, Rx message or synchronize mode code), rather than the uploaded times in the Store Description Message A. Out of specification busy times should be interpreted as store failures.

RATIONALE Notice 1: Implementing software that can manage busy conditions efficiently, can be difficult and cumbersome as special buffers have to be created and managed for each RT. These problems can become intolerable in the AIS where the terminals change between missions. The best solution is, therefore, to prevent 'busy' from being seen. To design effective software that can use the variable busy times, uploaded from mission stores, to maximize data throughput, is particularly difficult. Timing overheads from the resultant complexity of the software design, will outweigh the data throughput benefits offered by such a scheme.

GUIDANCE Notice 2/3: Unless the performance of the Bus Controller has intermessage gap times better than 50 microseconds, then it is suggested that no special processing in software for busy is provided. However, provision should be made to ensure that stores are shut down if excessively or permanently busy.

RATIONALE Notice 2/3: Excluding power up, mission stores can only hold the busy bit high for 50 microseconds. Even if the intermessage gap time is less than 50 us, then it is better to reschedule the message, potentially yielding the busy bit, rather than designing software 50 us

timeouts. If busy persists, then the software design should be capable of rescheduling the transaction for up to 5 retries before failing the mission store.

11.1.8.8 Data Bus Error Handling

ISSUE: How should the AIS manage data bus errors in general?

GUIDANCE Notice 1/2/3: The software designer should make every effort to recover from errors on the MIL-STD-1760 data bus, even if this significantly increases the complexity of the BC controlling software. Table 11.2 shows the general categories of data bus errors and unexpected events and the "remedies" the AIS should invoke to manage them.

Table 11.2 Data Bus Errors and Remedies

Error/Event	Recovery Mechanism(s)
No response	Retries and Redundant Bus changeover - 11.1.8.9
Parity Error	
Word Count Error	
Manchester Coding	
Bit Count	
Status Address	
Sync Pattern	
Terminal Flag	
Broadcast Bit	
Dynamic Bus Control Bit	
Reserved Status Bit	
Message Error Bit	
Checksum Failure (Tx)	
Busy Bit	Message retries - 11.1.8.7
Service Request Bit	Transmit Vector Word and request servicing - 11.1.8.1
Subsystem Flag Bit	Reset Mode Code, retries - 11.1.8.5

Notice 1/2/3 RATIONALE: Mission success is of paramount importance and mission stores should not be shut down unless a hard failure exists that prevents any control of the mission store. The LDD provides protection for safety critical message control in an unreliable data bus environment. Data bus errors should be sufficiently infrequent that relatively lengthy recovery (10 ms), will have a trivial overall impact on data bus loadings and processing power.

11.1.8.9 Retry Strategy

ISSUE: What is a general error retry scheme for data bus failures using primary and secondary buses?

GUIDANCE Notice 1/2/3: A software scheme should be developed which will schedule retries (switching from primary to secondary data bus when necessary) organized, and separately processed, for each RT. The error management scheme should be unseen by the controlling software, which is only provided with pass or fail indication(s). An example scheme is shown in figure 11.10.

RATIONALE Notice 1/2/3: Due to the nature of RT failures, the best scheme is to allow determination of buses for each RT, (such that one RT might be normally transmitting/receiving

on the primary and another on the secondary. This means that tables have to be available describing each RT's data bus status. Before a Mission store is shut down, a final attempt on the other channel should be made, even if previously this channel yielded no response, to ensure a hard failure exists. The application of three retries before switching data bus ensures a hard primary, or secondary failure, exists. Mission stores will have to be failed if a no response on both channels is determined by the attempted recovery.

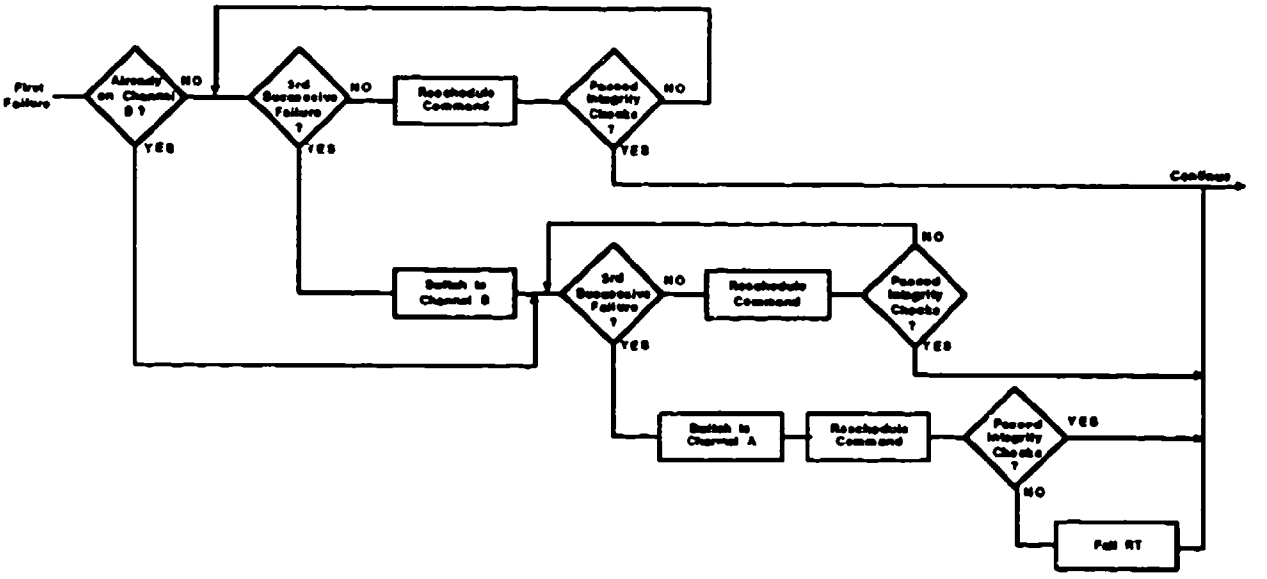

FIGURE 11.10 General Retry Scheme

11.1.8.10 Checksum Failure Recovery

ISSUE: How should the AIS implement recovery from checksum failure under notice 2/3?

GUIDANCE Notice 2/3: Only check for checksum failures on transmitted data on subaddress 11 transactions.

RATIONALE Notice 2/3: Checksum failures are only likely to be reported in a dedicated data word in the mission store monitor message. Safety critical control will always result in the scheduling of a mission store monitor message which then provides the protocol check word. Recovery from other message checksum failures might be initiated by the mission store requesting an asynchronous transaction to the failed subaddress using service request (see 11.1.8.1).

11.1.9 Coordinate Systems This section offers guidance for maximizing the benefits offered by the standard coordinate system, in terms of software design and performance.

11.1.9.1 Size and Performance Improvements

ISSUE: How can software size and performance requirements be improved if all measurement data are with respect to standard coordinate systems?

GUIDANCE Notice 1/2/3: Ensure all calculations to generate data are, with respect to the available standard coordinate systems, contained at one point and provide data readily available for mission store message building.

RATIONALE Notice 1/2/3: If the avionics data bus does not supply measurement data with respect to the LDD standard coordinate systems, then conversion software will be required. If measurement updates are being provided regularly, then, proportional to the complexity of the conversion, an increase in AIS processing power will be required. This situation will be far worse if different conversions are required for different mission stores.

11.1.10 Entity Definitions This section offers guidance on using specific standard data entity definitions. The use of the safety critical control and monitor words has already been discussed in section 11.1.6.

11.1.10.1 Benefits of Common Data Entities

ISSUE: How should the AIS software be structured to maximize the benefits of common data entity definitions?

GUIDANCE Notice 1/2/3: As described in paragraph 11.1.5, the AIS should construct a generic data base for storing all data entity types. These data entities should be stored in the standard LDD form for entity definition and data format. All data received by the AIS that will also be processed by the AIS and that is not routed straight through, should be recomputed into the standard data entity form as soon as possible. Obviously where data is received in the correct form and hopefully all data will be, then no recomputation will be required.

11.1.10.2 Discrete Control Management

ISSUE: How should the AIS Manage the Discrete Control Word 1?

GUIDANCE Notice 1: Ensure that the different control fields are represented in software in manageable constructs and also that, for using the control bits, the sequence of control changes resulting are determined before software development begins. It is not possible to implement a generic software module to manage this data.

RATIONALE Notice 1: Because there is ambiguity in the LDD bit field definition, the mapping of control functions will tend to be store unique. More readable and maintainable software will be produced if bit fields can be represented by meaningful constructs, for example enumeration types.

GUIDANCE Notice 2/3: None offered as the Discrete Control Word standard data entity has been eliminated.

11.1.10.3 System Time Management

ISSUE: How should the AIS software manage system time to ensure synchronism on the MIL-STD-1760 interface data bus?

GUIDANCE Notice 1: The AIS low level Bus Control Software/firmware should latch the LSP of system time into the system time update message, at the moment of transmission not the moment of queuing. The high level to low level task definition should use a task descriptor that can indicate, both that system time is required and the data word position of system time.

RATIONALE Notice 1: To ensure the current system time is accurately used for synchronizing a Mission Store, the AIS software must latch this time in at the moment of transmission. Specifying the data word position in a task descriptor, allows standard firmware to be used for latching the current system time independent of where it is placed in the message.

GUIDANCE Notice 2/3: Ensure the MIL-STD-1553 message transmission firmware can latch the system time into the associated data word for the synchronize with data mode code.

RATIONALE Notice 2/3: All Mission Store time LSP synchronization can be achieved with the synchronize with data Mode Code. To ensure the current system time is used, the time should be latched into the data word at the moment of transmission not the moment of message queuing.

11.1.10.4 Usage of Store I BIT Time

ISSUE: How should the AIS software use the uploaded Mission Store Interruptive BIT duration?

GUIDANCE Notice 1/2/3: An AIS software implementation should use the uploaded interruptive BIT duration time to minimize the overall system IBIT duration. All Mission Stores should ideally be placed into IBIT at the same time, such that the complete Mission Store IBITs are run concurrently. In practice, the aircraft available power will limit the numbers of stores that can be simultaneously in IBIT. The AIS application software can utilize the IBIT duration data to optimize the sequence of IBIT initiation. The resultant Mission store status should be polled by the software starting with the Mission store with the earliest IBIT completion.

RATIONALE Notice 1/2/3: An overall AIS design aim should be to reduce the overall system IBIT duration to the minimum period. This is particularly critical if IBIT is initiated in flight. Using the uploaded IBIT duration time in the way described above, will ensure that the overall system IBIT time is minimize, by allowing the AIS software to sort mission stores into an IBIT duration order.

11.1.10.5 Fuzing Control

ISSUE: Control of Fuzing using the Fuzing Control word.

GUIDANCE Notice 1/2/3: Represent the fuzing control word by a HOL construct and send the mission store default setting or, if different, the pilot selection at the same time as the execute arming state is entered. Allow the setting to be changed until the commit state is entered.

RATIONALE Notice 1/2/3: Mapping the transmission of this control word to the execute arming safety critical state is consistent with overall safety requirements. Representation of fuzing option in HOL constructs aids readability and maintainability.

11.1.10.6 Validity Word Management

ISSUE: How should the AIS software manage Validity words?

GUIDANCE Notice 1/2/3: The AIS has two areas of validity flag management. These are for data transmitted to stores and data received from stores. Because there are residual ambiguities in the LDD, it is not possible to fully define generic modules for validity management as the AIS may be required to interface to differing mission store interpretations of validity. Specific guidance is listed below:

a. The AIS should not use validity as "change" flags in data transmitted to stores. Although this would potentially allow for mission store processing to be optimized (by only processing those data entities updated) it is possible that some mission stores might interpret an invalid flag, referenced to a key data entity, as an indication of total inability to function.

b. The AIS should implement the validity processing for the mission store control message in such a manner to avoid, if at all possible, indicating any contained entity as invalid.

c. The AIS should implement unique to store validity modules to compute the validity words for unique message formats. Entities can be marked as invalid under a number of circumstances, for example if the aircraft source data is marked as invalid (and cannot be synthesized by substituting an "equivalent" entity), or the source data not being adequately updated.

d. The AIS should implement generic software modules for management of validity data received from stores. The AIS should not update the generic data base (see paragraph 11.1.5) for entities received as invalid. Furthermore the latest validity words for each message received by the AIS should also be available to higher level application software. This is effectively using received validity flags as both "change" indicators and validity indicators.

11.1.10.7 Header Code Management

ISSUE: What AIS design should be employed in software management of Header Codes?

GUIDANCE Notice 1/2/3: All header codes should be individually held for each message type as fixed data and latched in by the standard message building software. These header codes will be defined by either the notice 1 store description upload or the ICD.

RATIONALE Notice 1/2/3: Message header checking is part of the standard protocol checking and is required in every message. A common fixed data area for headers contributes to the overall integrity performance of an AIS.

11.1.11 Data Formats This section offers guidance for exploitation by AIS software of standard data formats.

11.1.11.1 Standard Data Word Benefits

ISSUE: Can the benefits of standard data formats be realized in an AIS software implementation?

GUIDANCE Notice 1/2/3: Combine standard data word building modules with a quick access data base of data entities in the specified data formats. Access should be by the generic message building process discussed in 11.1.5.

RATIONALE Notice 1/2/3: The major benefits of reduced software size and performance requirements can be maximized by bringing together a data entity data base efficiently accessed by the message building software.

11.1.12 Base Message Formats This section offers Guidance on how AIS software can maximize the benefits of the standard base message format.

11.1.12.1 Base Message Usage

ISSUE: How should the AIS software use of base message formats?

GUIDANCE Notice 1/2/3: The standard message building modules discussed in 11.1.10.8 and 11.1.11.1 should be implemented.

RATIONALE Notice 1/2/3: Generic Message building modules are recommended to exploit the information held in the uploaded store descriptions/mission store ICD. No particular guidance can be offered as the most recent specifications in Notice 3 reduced the standard message to just the inclusion of a header word.

11.1.13 Mass Data Transfer This section offers high level guidance for AIS Mass Data Transfer software implementations.

11.1.13.1 Generic Software Development

ISSUE: Should a generic mass data transfer set of software be developed in the AIS or should implementation be specific to Mission store?

GUIDANCE Notice 1: None offered as the Mass data transfer protocols were not specified within this issue of the standard:

GUIDANCE Notice 2/3: Develop Mass data transfer handling software. This should be specific to each mission store type, but each separate implementation should have a common external interface.

RATIONALE Notice 2/3: The complete mass data transfer protocol is too complex to implement a fully generic set of handling modules in the AIS, but a common interface to the rest of the application software modules will improve the overall software structure.

11.2 General Software Issues This section offers guidance on the more general issues which are important to the software life cycle of an AIS implementation.

11.2.1 Language Selection

ISSUE: Which software language(s) should be used in the AIS?

GUIDANCE: All AIS software should be implemented in the MIL-STD-1815A (Ada) HOL with the following exceptions listed below. In either exception case the new AIS software must be specified using Ada as a Program Design Language (PDL).

a. Where the AIS can utilize significant portions of existing proven software and the new software will add less than 30% to the existing object code.

b. Where the software is partitioned into several equipments then the software for a small equipment may be written in an assembly code or other convenient language if the software function is definable as firmware (reference DOD-STD-2167), or the software is not intended for end user support.

RATIONALE: The case for using Ada is extremely strong. It is government policy to use Ada on all new programs where more than 30% new code is required. Additionally, there are a number of technical reasons:

a. Ada is a standard language that cannot be subsetted.

b. Each Ada compiler has to pass strict validation tests. This provides a high assurance that the end user will be able to readily support the Ada code.

c. The Ada language addresses all phases of the software life cycle, offering cost benefits at each phase.

d. Ada is a language designed to support the needs of real time embedded systems (the environment for AIS software).

e. The Ada Specification includes advanced features not present in alternative languages such as Jovial J73 or CMS2. These advanced features are discussed in more detail in section 11.2.2, but include:

- Packages
- Dynamic Data Structures
- Generics
- Separate Compilation (present to a degree in Jovial)
- Tasking
- Exceptions
- Run Time constraint checking

The cases for waivers against Ada are usually based on:

a. Historical data from immature compilers without Global Optimization or tailored Run-time Support

b. Compilation of trivial tasks

c. Lack of state-of-the-art target hardware

11.2.2 <u>The use of MIL-STD-1815A Ada HOL</u> This section offers guidance for software design using the Ada Programming Language. It discusses the following new language constructs, and how best they may be used within an AIS implementation:

- Packages
- Dynamic Data Structures
- Generic Units
- Separate Compilation
- Attributes
- Portability
- Tasking
- Exceptions
- Data Hiding
- Constraint Checking
- Data Abstractions

11.2.2.1 <u>Ada Packages</u> The Ada "package" has proved to be the principal program unit. The package allows grouping of logically related entities and sub-programs, which can then be accessed by Software external to the package. An Ada Package consists of two parts, the Body and the Specification. Software external to the Package may be allowed visibility of the Specification, but not the Body. The inner workings of the package are held within the body thus concealing the code and data structures from external software.

11.2.2.1.1 <u>Effects of Package Structure</u>

ISSUE: The effect of the Ada package structure upon the design of the AIS software.

GUIDANCE: It is advisable to produce a modular design where entities are logically grouped into packages with a minimal set of package dependencies. In general, designs incorporating complex inter-package dependencies are discouraged. This naturally requires a longer initial design

phase, and the availability of firm software requirement specifications, before the task of software design begins.

RATIONALE: Careful design of the modularization into packages, and the minimization of package dependencies, will produce software that is easily understood, and easily modified, without major recompilation (If a package specification is modified, then all packages that depend upon that package must be re-compiled before executable code can be produced). An optimum split of logically related subprograms and data, requires careful consideration and this will result in longer design periods than may have been historically allocated. This extra design time will, however, result in a reduction of total life cycle costs.

11.2.2.1.2 Package Unit Usage

ISSUE: The use of the package program units within the AIS software design.

GUIDANCE: The package program unit construct should be exploited by the AIS software designer, because many LDD requirements can be a logical group as either data structures or code procedures/functions (subprograms). The following MIL-STD-1760 elements could form the basis of principle AIS packages:

- Store Descriptions
- Service Request Processing
- Error Recovery
- Safety Critical Monitor
- Network Management
- ICD message building
- Subsystem Flag Processing
- Safety Critical Control
- Standard Entity Processing
- Power Switching

RATIONALE: Experience of Ada control systems clearly shows that logical grouping into packages results in higher modularity, greater reliability, better readability, and more maintainable software. In addition, the LDD lends itself to this type of modularization.

11.2.2.1.3 Package Development for Data Only

ISSUE: Development of packages containing only data

GUIDANCE: The grouping of logical related data into packages, should be used to develop system control data structures such as the inventory. However, the size of such data packages should be limited to about 200 lines.

RATIONALE: Access to data structures containing System status information, should be limited to those areas of the control software that require access to the data. Package scope rules fulfill this requirement and increase the integrity of the software. Creating large data packages, results in large amounts of global data which compromises the integrity of the software design solution.

11.2.2.2 Ada Tasking Provision is made within the Ada Programming language to allow the development of program units known as tasks. Tasks are program units that may run concurrently with each other, thus allowing further functional decomposition of the design. In order to implement tasking, an underlying real time tasking executive is supplied within the Ada Run Time System (RTS). The RTS must be co-resident with the application software in all embedded Ada systems.

ISSUE: Should tasking be used in the AIS software design?

GUIDANCE: Tasks should not be used to control the low level MIL-STD-1553 transactions or LDD protocol handling. If safety critical and mission critical software are separated, then tasks may be used for high level mission store control.

RATIONALE: Any design using a multi-tasking environment will require "task switching" to take place. usually on a priority basis. The Ada language makes provision for this with the rendezvous. Currently available Compiler/RTS implementations have task switching overheads averaging 3 milliseconds, and never better than 1 ms. As typical pre-launch missile targeting environments run in a 20 ms processing frame, one task switch would use at least 10% of the available time, clearly, the overheads of multiple task switches would be unacceptable. Where extra overhead is of little consequence, such as in changing the operating state of the mission store, then the powerful design features offered by Ada tasking should be exploited. Tasking should not be used for software embedded in safety critical controllers, as tasking cannot be formally validated and this would compromise safety requirements.

11.2.2.3 Dynamic Data Structures It is possible to design Ada Code that will cause complex data structures to be created when the code is running. These data structures may exist for only a short time. To support this language requirement, the co-resident RTS manages a heap and implements a "garbage collector" to relinquish used heap.

ISSUE: Should dynamic data structures be used within an AIS design?

GUIDANCE: Dynamic data structures should not be used within AIS software.

RATIONALE: Garbage collection, which is an essential part of heap management, generally involves a large run-time overhead. This time overhead is usually unacceptable in a real-time system.

11.2.2.4 Exceptions The Ada Programming language has provision for dealing with error, or exception, events during program execution. Exceptions may be raised by compiler generated run-time checks, or by application code. Raising of an exception will result in the abandonment of the current processing path and the search for an in-scope exception handler. If no exception handler is found, then the co-resident RTS will trap-out, resulting in a system crash.

ISSUE: How should exceptions be used within an AIS software design?

GUIDANCE: Exceptions should only be raised due to failure conditions being detected. They should never be used as a standard control transfer mechanism. Exceptions should always be declared within a package specification and should not be raised and handled within the same package body. Exceptions should not be used in safety critical software.

RATIONALE: An exception may be declared at any point that data may be declared. Assuming that an exception declaration is in scope, then an exception can be raised at any point within the application code and can be handled at nearly any point. The intended use of exceptions is for error reporting and use in other circumstances would make the code confusing. Safety analysis of safety critical software implementing exceptions, would be very difficult and costly.

11.2.2.5 Generic Units The Ada programming language allows generic units to be declared. A Generic Unit can be considered as a software template from which copies can be taken. The copies become specific instances of the Generic code, perhaps tailored with parameters, for specific uses.

ISSUE: When should generic units be established?

GUIDANCE: Software designed to support the LDD will result in the establishment of many subprograms and packages, which are general purpose and will be required in any AIS. Once the interface to these packages, that is the package specification, has been fully developed, and proved, then they can be converted into generic units.

RATIONALE: If immature packages are used as generic units, then the inevitable modifications of the packages would necessitate recompilation and perhaps redesign of any other units which use (instantiate) the modified generic unit.

11.2.2.6 Data Hiding The Ada language structure allows the possibility of hiding data declared within a package, from external software. Data hiding may be achieved in two ways:

ISSUE: How should data hiding be used in an AIS software design?

a. The data may be declared within the body of the package.

b. The data may be declared as PRIVATE within the package specification. This allows the data to be accessed by external users, but with the internal structure hidden.

GUIDANCE: Data hiding should be exploited to the maximum extent possible. Where practicable, subprograms should be used as access mechanisms for such data.

RATIONALE: By using the concept of data hiding to the full, the resultant software will have greater reliability and readability. The software will be more reliable, because data that is inaccessible cannot easily be accidentally corrupted. The software will be more readable because irrelevant detail will be hidden.

11.2.2.7 Separate Compilations The Ada programming language allows each package specification and package body, to be separately compiled. As packages communicate via Package specifications, a package body may be modified and recompiled, without necessitating the re-compilation of other packages that are dependent upon the specification.

ISSUE: Use of the separate compilation Ada feature to assist in program modularization.

GUIDANCE: The Ada separate compilation capability should be exploited. All package specifications, bodies and subprograms should be created as separate compilation units.

RATIONALE: Separate compilation will result in a reduction in software development cost. This is true, because if only the body needs modifying, then only the body needs to be re-compiled. In addition, configuration control and long term maintainability are enhanced by the use of separate compilation.

11.2.2.8 Constraint Checking The Ada programming language is a highly "typed" language, all data having specified bounds. An Ada compiler has the capability of (optionally) producing code to perform run-time checks on all data accesses. If run time checks are enabled, and an invalid data access occurs, then a system exception will be raised. If the exception is not handled by the user application code, then the program will crash with an error message.

ISSUE: When should full constraint checking be applied to object code?

GUIDANCE: Constraint checking should be enabled during AIS software development, but should be disabled before final compilation of the operational software.

RATIONALE: Run-time checking considerably increases the object code size and run-time. Such checking is invaluable during development, but all constraint error occurrences should be eliminated during testing, so that the overhead implied by the checks can be eliminated in the final program.

11.2.2.9 Attributes The Ada programming language provides an attribute construct which allows attributes of data items to be examined. For example "XYZ'first" equates to the lower limit of Item XYZ.

ISSUE: Should attributes be used in AIS software?

GUIDANCE: Whenever possible a data attribute should be used rather than assuming the attribute is of a particular value.

RATIONALE: Use of the attribute facility will reduce the extent of software modification and retesting, if bounds of types are modified.

11.2.2.10 Data Abstraction The extensive range of predefined types and user defined types combined with record structures and multi-dimension array declarations allows the abstraction of control design concepts into powerful flexible data structures built with a high degree of readability.

ISSUE: How should data abstraction techniques be applied to AIS software design?

GUIDANCE: The ability to abstract requirements into package splits and control data structures, should be taken advantage of.

RATIONALE: Use of data abstraction techniques to develop the package split and data control structures, will result in an effective and maintainable design.

11.2.2.11 Portability Software is usually designed to be compiled by a particular compiler, and to run on a particular set of target hardware. It is often the case that, after the software has been completed, it is necessary to modify the software using a different compiler, or to use different target hardware, or both.

ISSUE: How can AIS software be ported to different targets?

GUIDANCE: Avoid over reliance on chapter 13 features of MIL-STD-1815A and minimize the use of assembly language inserts.

RATIONALE: All Ada language Compilers must implement the full MIL-STD-1815A requirements and marketed Ada compilers must be validate by passing a validation suite of programs witnessed by a Government department. The Current validation suite does not test for chapter 13 constructs (which are related to interfacing with hardware) and to date compiler producers have not tended to implement all of chapter 13. Extensive use of chapter 13 constructs will therefore severely compromise portability. Portability is also compromised by excessive use of assembler inserts which, by definition, are target dependent. However, it may be necessary to use some assembler inserts for such things as unimplemented chapter 13 constructs, access to special instructions and where access speed is critical.

11.2.3 Instruction Set Architectures

ISSUE: Which computer Instruction Set Architectures (ISA) should be used in the AIS?

GUIDANCE: No ISA is specifically recommended. The ISA should be specified for AIS processing (not firmware) by consideration of existing processors and new processors.

11.2.3.1 Existing Processors If existing processors are to be retained, then they are most likely to be of MIL-STD-1750, AN/AYK-14, Z8000 or 8080 instruction set. Should more than 30% of new software be required, then Ada must be used (see section 11.2.1). Ada is not well supported for Z8000 and 8080 targets, so a new processor will be required (see below). Both MIL-STD-1750 and AN/AYK-14 will be supported with Ada, and are therefore suitable for AISs.

11.2.3.2 New Processors New processors for the AIS should be selected by consideration of standardization, Ada support, and processing power; with standardization being the most important criteria and processing power the least.

11.2.3.2.1 Standardization To improve life cycle costs, the aircraft designer, or sponsoring service, may mandate the use of a particular common processing module. Standardization on a common module offers clear benefits in spares support and competitive procurement. Standardization on an instruction set itself may offer relative minor advantages, because only a small percentage of low level non-supportable code is likely to be written in assembly code. Currently, government standard processing modules are MIL-STD-1750 or AN/AYK-14 ISA.

11.2.3.2.2 Ada Support The quality of Ada support is related to such factors as: the number of compiler vendors, the available tools, and the efficiency of execution using the ISA. A listing of suitable candidate ISAs, in descending order of Ada support availability are:

a. 68000 (or 68020) with or without 68881
b. 8086 (or 80X86) with or without co-processor
c. NS 32X32
d. MIL-STD-1750
e. AN/AYK 14
f. Z80000
g. Z8000

11.2.3.2.3 Processing Power Processing power is usually measured by the speed of execution of the Digital Avionics Information System (DAIS) mix of instructions. This is not always a meaningful method of comparing processors, as it ignores instructions required to either, directly execute complex mathematical functions (SIN, COS, square root) or improve compiled code. Examples of ISAs whose real relative performance is better than indicated by DAIS mix, are AN/AYK-14, 68020 + 68881, and 80286 + co-processor. Figure 11.11 shows a number of comparative processing powers using the DAIS mix. It must be emphasized that specifying an ISA does not in itself specify a processing performance. The designer should, however, be aware of the likely performance of each ISA implementation.

11.2.3.3 Firmware Processors No guidelines are given here for positive choice of firmware processors. There are many candidate ISAs available, and as firmware is not end-user supportable, there are few factors to consider. Some are listed below:

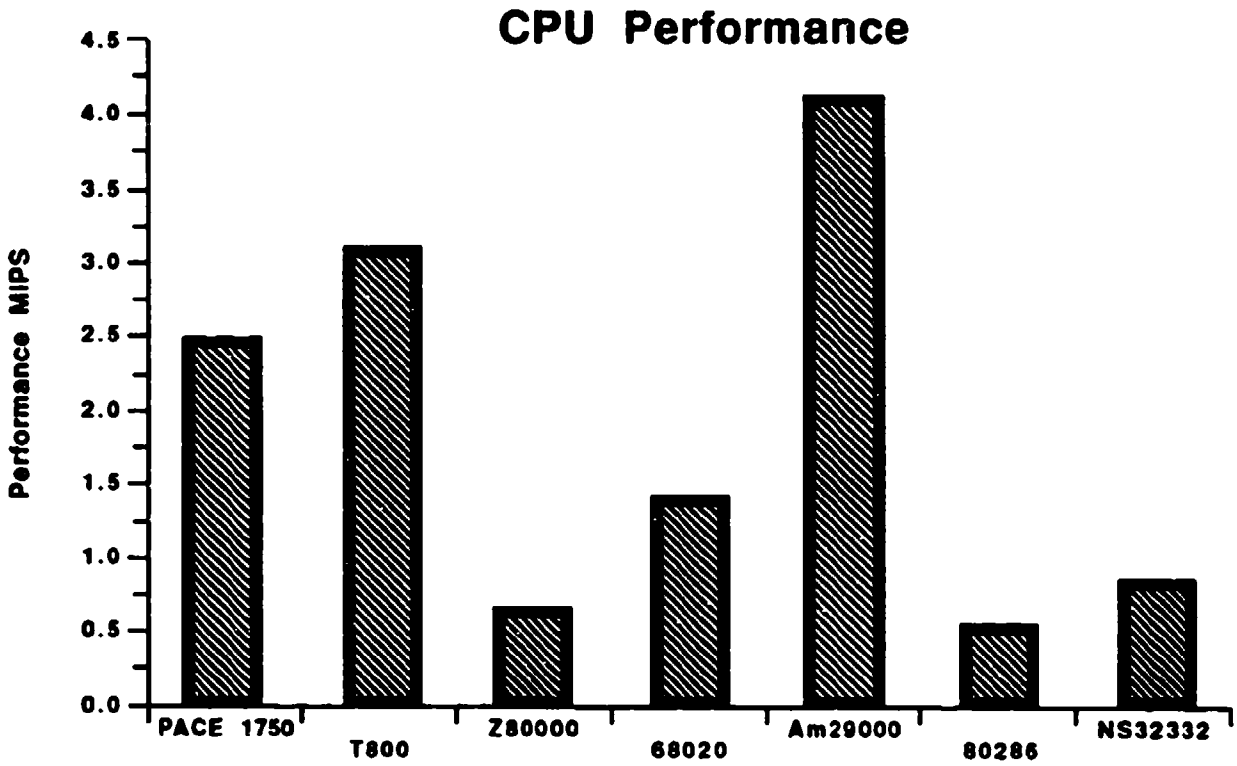

Figure 11.11 Comparative Processing Powers (DAIS mix) with co-processors

a. Specifying a firmware ISA will be excessively and unnecessarily restrictive on design.

b. ISAs with only single (military grade) sources of components should be avoided.

c. ISAs with severe limits on memory capacity should be avoided, as they may inhibit later modifications or reuse of design.

11.2.4 Processing Requirements This section discusses the processing power and memory requirements imposed upon an AIS implementing the LDD.

11.2.4.1 Processing Power Analysis of the various functional elements of the LDD and shows that they can be split into two groups:

a. Those whose implementation require considerable lines of code, but are only invoked under exceptional circumstances. These have little effect on system operational processing power requirements. They include: Status Word Processing (only invoked at times of error) and Store Description Processing (only invoked at Power up).

b. Those that will frequently be invoked during high peak system operation processing, to allow control and release of a mission store, namely standard message building and standard message decoding. Standard Message processing has the most effect upon the processing power requirement, as it will be invoked on a regular basis at the high peak processing phase of targeting a mission store after its selection and prior to its release. It should be noted that Mission Store state changes, using the safety critical subaddress, do not have an effect upon IPS requirements, as it is at these times that the peak processing loads will be invoked or removed.

ISSUE: What typical processing power trends occur from implementing the LDD?

GUIDANCE: No specific IPS figures can be supplied as there are many other factors effecting AIS IPS requirements. These factors include:

a. The number of mission stores to be simultaneously controlled.

b. The amounts of data conversion required for standard data entities.

c. The intelligence of the support hardware.

In general the implementation of the LDD can result in generic software modules which, by their very nature, have a processing overhead. The more stores that are to be simultaneously controlled, the less the IPS are required compared to a non generic solution. This is shown in figure 11.12.

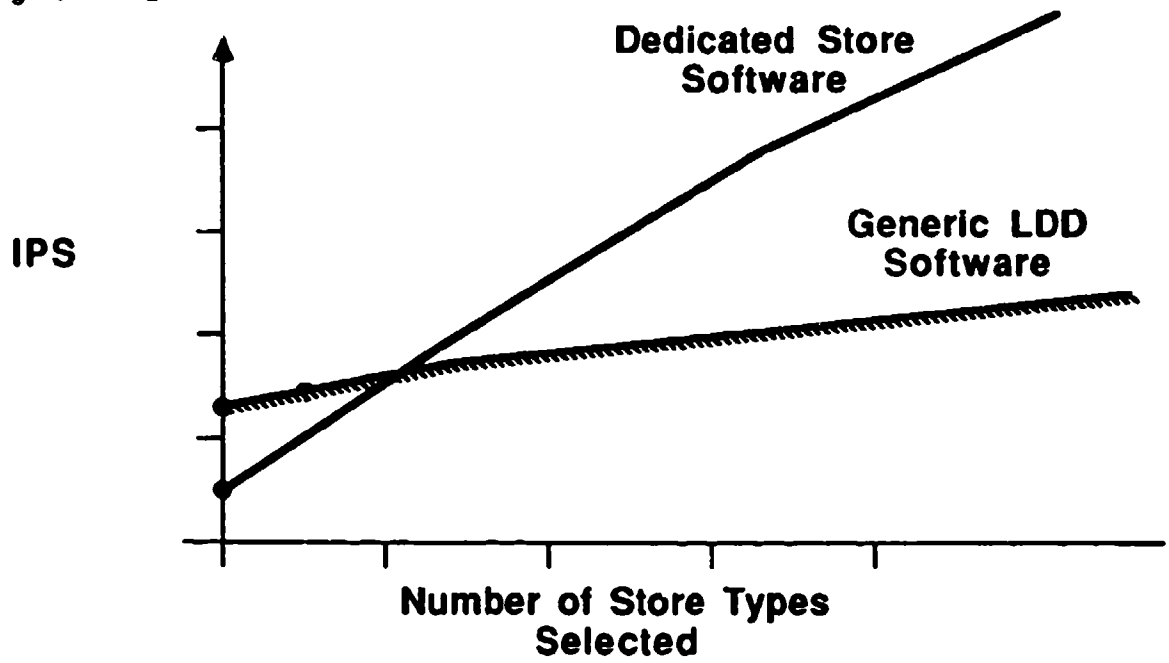

FIGURE 11.12 Effects on IPS requirements of different software design strategies.

11.2.4.2 Memory Requirements The implementation of the LDD within the AIS will have effects on both code and data requirements.

11.2.4.2.1 Code Memory The LDD requires the implementation of:

a. Standard error handling/recovery modules

b. Standard message building/decoding modules

c. Standard data entity word generation modules

d. Standard upload modules

ISSUE: How much extra code memory is required in the AIS?

GUIDANCE: The amount of memory is dependent upon the number of different mission store types to be controlled. If one mission store is to be controlled, a 25 percent code overhead should be used. If three mission stores are to be controlled then a 25 percent reduction should be used.

11.2.4.2.2 Data Memory There are three main areas where the LDD impacts AIS memory requirements:

a. Representation of user definable RX and TX subaddresses within Mission Store data. Under Notice 1 this would be uploaded from a mission store. Under Notice 2/3 this could be a data structure representation of the Mission Store's ICD.

b. A data entity data base

c. BIT LOG information built up from error conditions reported by the basic protocols.

ISSUE: How much extra data memory is required for an AIS software design?

GUIDANCE: It is likely that for an AIS design controlling 4 mission store types that 20K words will be required to support the above.

11.2.5 Software Architectures This section offers guidance on how best to structure software for, an AIS using the LDD. It does not discuss the overall performance requirement of executive facilities available for an AIS, which would be application dependent, but assumes that a multi-tasking environment would be available. The LDD, as discussed in section 11.1, has functional elements which should be developed into software modules capable of handling the protocol requirements specified in the LDD in an efficient and general purpose manner. Close study of the LDD requirements show that the LDD has three distinct layers of protocol:

a. Upper Layer - Mission store control, through the use of uploaded message descriptions

b. Intermediate Layer - Mission store release sequence

c. Basic Layer - Error Management

This is analogous to typical processing layers in an AIS design solution using a MIL-STD-1553 data bus, namely:

a. Upper Layer - Application Control

b. Intermediate Layer - General control routines

c. Basic Layer - MIL-STD-1553 Message transmission

Section 11.1 also discussed the need to contain the processing to its layer of relevance, and to only communicate upwards those areas with which the processing cannot deal, because it does not have access to the required information.

ISSUE: What is the best overall software structure for an AIS implementation?

GUIDANCE: The software should be structured in strong layers, with:

a. Application code at the top

b. General purpose message control routines next

c. Finally, general purpose MIL-STD-1553 routines that exclusively interface with the modules responsible for accomplishing status word responses

Unless there is not enough information at that level to perform recovery action, decoding of reported error situations should be contained within a processing layer. Ensure that all software responsible for safety critical controls are developed in separate compilation units. This may span several processing layers.

11.2.5.1 Mapping of Ada HOL constructs to a layered approach The use of Ada packages and Ada exceptions, (as discussed in section 11.2.2), map very well to a layered approach. An example package implemention is offered in figure 11.13. The following rules are applicable:

a. Packages must only interface with other packages (and therefore gain accessed to their subprograms), if they are on the same layer, or on the layer directly below

b. An Exception must be handled by the layer on which it is raised unless there is not enough information to handle the exception at that layer

This scheme imposes a slight processing overhead, but allows the implementation of the LDD to include generic software modules (see section 11.2.2.5).

11.2.6 Reusable Software Reusing software already developed will, reduce the cost of development for a new system.

ISSUE: How can reusable software be developed?

GUIDANCE: The guidance offered in section 11.1 is for the development of generic LDD modules with specified interfaces. Section 11.2.5 offered guidance in using these building components in a layered structure. If this guidance is followed, then the resultant software will be highly reusable.

11.2.7 Software Interfaces

ISSUE: How may meaningful software interfaces be developed?

GUIDANCE: AIS implementations should always be written in the recommended HOL. Ensure that all data, and data types, have very meaningful names. Exploit the HOL constructs that allow the structuring of data, particularly the record construct. Always use comments where an implementation is not obvious. Make extensive use of the Ada package discussed in section 11.2.2.1, and data abstraction techniques discussed in section 11.2.2.11.

RATIONALE: Readability and understandability are the key to maintainability and therefore reduced cost of ownership.

11.2.8 Program Support Environment Software tools are available that claim: improved programmer productivity, improved program reliability and quality, and enhanced long term software maintainability. Tools can be grouped together with a compilation system to form a program support environment. Examples of support tools are:

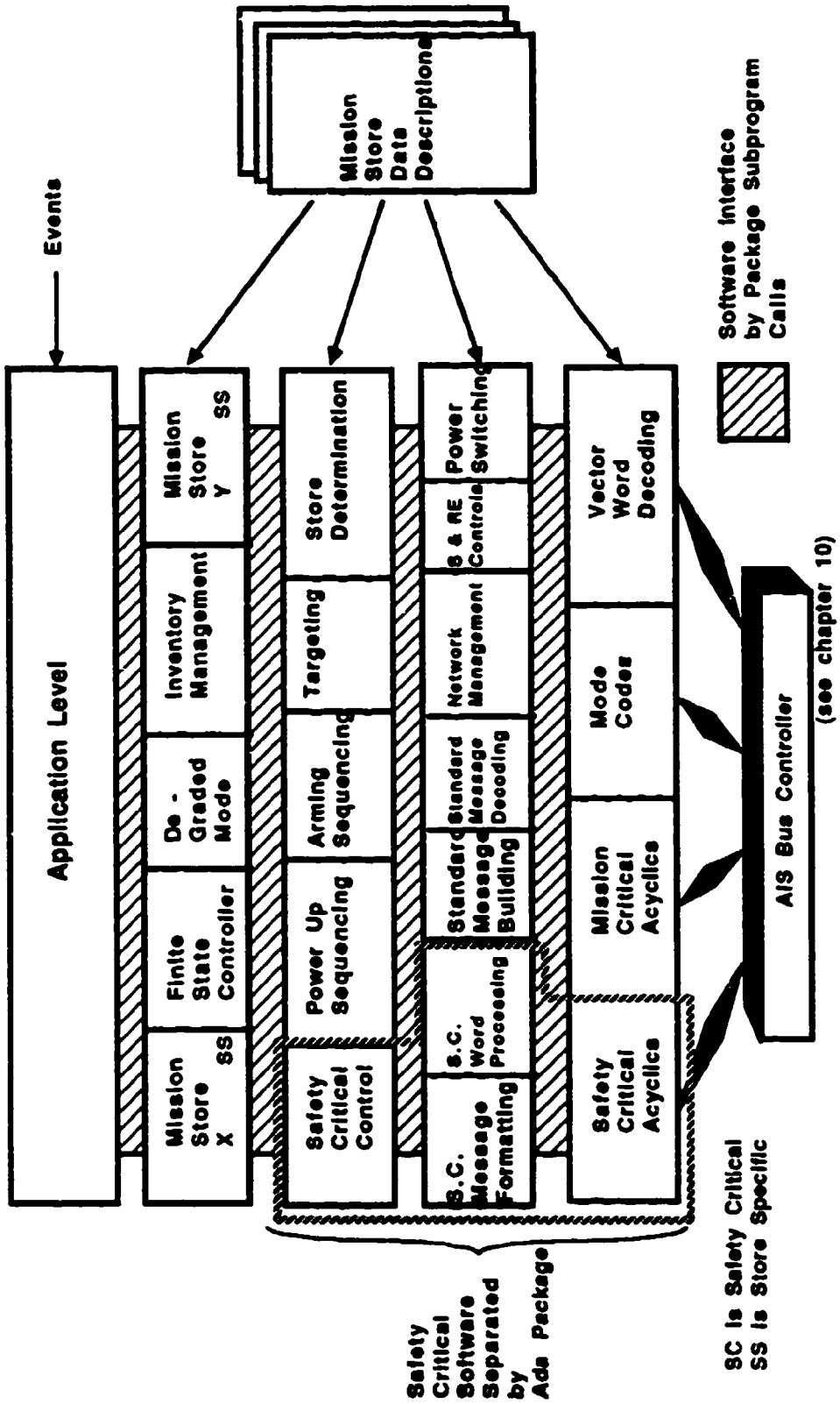

FIGURE 11.13 A Layered Software Architecture

a. Host/Target Symbolic Debuggers

b. Syntax sensitive editors

c. Library Management tools

d. Automatic dependency sensitive recompilation tools

e. Run-time Profiling tools, to determine time taken in each procedure, etc

A support environment for the Ada programming language is called an Ada Program Support Environment (APSE).

ISSUE: Should a software support environment be used?

GUIDANCE: An Ada compiler should be chosen that supports an advanced tool set. The toolset should incorporate at least a Symbolic Debugger and a Library Manager. In addition, it would be wise to ensure that the compiler vendor has a long term commitment to upgrading and extending the tool set.

RATIONALE: An AIS software solution that maximizes the benefits of a Program Support Environment, will reduce the cost of development and ownership.

11.2.9 Software Configuration Control A configuration control system will have some or all of the following attributes:

a. Ensure that a secure copy of each controlled software issue is kept.
b. Permit only authorized changes to software.
c. Provide automatic recompilation and management of multiple software builds.
d. Allow rebuilding to any previous release standard.

ISSUE: What type of configuration control environment should be used for control of AIS software?

GUIDANCE: A computerized configuration management system should be chosen. Care should be taken to ensure that the system can interface effectively with the Ada library manager.

RATIONALE: Control of complex software build standards using manual paper based systems is both excessively time consuming and prone to error. Cross referencing is particularly cumbersome. A computer based configuration control system will be fast and reliable, with mechanisms to cross reference changes, and build standards.

11.3 Benefits of the LDD to AIS Software The LDD (following Notice 3) contains only a subset of those features originally envisaged as being included in the standard. As a result the benefits to the AIS software are to an extent limited. The following features of the LDD (to Notice 3) are those with the most potential benefit to AIS designers.

- Standard safety critical formats and subaddresses
- Standard data word and entity definitions
- Standard coordinate systems
- Standard set of MIL-STD-1553 options
- Standard data check algorithm

12. AIS INSTALLATION ISSUES AND GUIDELINES

This Section considers some of the topics relevant to the installation of AIS equipment in the aircraft. The topics covered relate, in particular, to the installation and routing of the various types of cables associated with the system.

12.1 Connectors MIL-STD-1760 requires the use of connectors meeting the intermatability requirements of MIL-C-38999 Series III.

ISSUE: What specific requirement of MIL-C-38999 should perhaps be reflected into other parts of the AIS not controlled by MIL-STD-1760.

GUIDANCE: MIL-STD-1760 is, of course, an interface standard and as such can only control that wiring associated directly with the interface, that is there is nothing in the standard to stop the aircraft designer using non-standard connectors, contacts, and/or cable upstream of the ASI. Such a change could be routing the multiplex data bus cable through three separate size 20 contacts instead of utilizing a twinax contact. It is therefore considered imperative that MIL-C-38999 Series III connectors are used throughout the AIS, wherever actual MIL-STD-1760 interfaces are being connected, in order to maintain the high degree of noise immunity that those connectors give. Note that this must include the overall screen to be effective. Note also that AFR 122-10 requires the widespread use of MIL-C-38999 connectors throughout any nuclear certified AIS.

12.2 Multiplex Data Bus Cable MIL-STD-1760 requires the use of twinax contacts across the interface and these in turn demand the use of specific wire. Note that this demand is supported by both MIL-STD-1760A and MIL-STD-1553 which require cable of specific base characteristics.

ISSUE: Should specific cable be used in the AIS installation?

GUIDANCE: It is not considered appropriate to utilize different cable in other parts of the installation. Dual redundancy is provided for the bus so a high degree of importance should be given to physically separating these cables to minimize the effects of battle damage. Note that although the Low Bandwidth contact (and therefore one would would expect cable) is identical to that for the Multiplex data bus, the electrical characteristics are completely different.

12.3 High Bandwidth Cable The cable requirement is in two parts, namely:

a. Cable for the 50 ohm contact requirement

b. Cable for the 75 ohm contact requirement

The latter is controlled by MIL-C-39029 slash sheets 28 and 75, that is the specifications for the mating contacts.

ISSUE: Should specific cable be used in the AIS installation?

GUIDANCE: At this time the new slash sheets (102 and 103) for the 50 ohm coaxial contacts are not yet published, so no cable guidance can be given. However, it is quite imperative that the designer realizes that for High Bandwidth 1 installations, at least, coaxial cable of 50 ohm impedance (and engineered co-axial contacts) must be used throughout the installation in order that the VSWR requirement stays within the specified limits. The designer should also consider

that cable compatible with the above connectors may have significant attenuation at the 1.6 GHz type B signal limit. Care should be taken to ensure attenuation does not exceed that specified in section 8 (MIL-STD-1760 imposes no type B attenuation limit).

12.4 Release Consent and Interlock Cables There are no cable points to watch in this area. However, it is recommended that great care is taken with connector layouts, where Release Consent is involved, to protect that signal from inadvertent enabling, for example isolate the contact from other contacts at 0V potential.

12.5 Address Line Cable The only specific point to watch is that MIL-STD-1760 has specific induced noise limits and this will be important if cable length becomes significant, for example the ASI address is detailed within the wing.

12.6 Power Cable It is not considered appropriate to discuss such requirements, because MIL-STD-1760 has no particular implementations which differ from that presently practiced. However, it may be important to realize that MIL-STD-1760 does call out specific limits of voltage drop (2 volts for DC and 3 volts for AC applications) under full load conditions right up to the MSI.

13. AIS SYSTEM INTEGRATION, TESTING AND IN-SERVICE SUPPORT

This section discusses some of the issues relevant to AIS system integration and testing. The extent of the coverage of this large topic is limited by the scope of work undertaken during the AAII program.

13.1 INTEGRATION This paragraph will attempt to raise some of the points which need to be considered when adding the first MIL-STD-1760 store to an in-service aircraft.

13.1.1 Connectors The integration of any new store usually requires the addition of suitable connectors, that is the mating half to that fitted to the store, and a MIL-STD-1760 store is no exception. However, there is one major difference and that, of course, is that all future MIL-STD-1760 stores will then have already been catered for.

ISSUE: Should the MIL-STD-1760 connectors be fitted at the first available opportunity?

GUIDANCE: Yes of course, it can only be of benefit in the long run.

ISSUE: Could some or all of the existing connectors be superseded by the MIL-STD-1760 connector?

GUIDANCE: Providing that the ASI carries only MIL-STD-1760 signals when a MIL-STD-1760 store is fitted, then the standard is satisfied. This means to say that, with a suitable umbilical cable(s) adapting the ASI to the interface which is required and steering devices (relays say) which give positive isolation of signals for either MIL-STD-1760 or non-MIL-STD-1760 stores, an installation could be designed to enable full integration to take place.

ISSUE: Where should the ASI be fitted.

GUIDANCE: Wherever is convenient for the ground-crew to attach the umbilical. This may be on the Store Station Equipment, the pylon side wall (on a bracket) or the roof of the pylon. The floor of the pylon is not recommended, since the ASI is a socket and a floor installation will encourage accumulation of dirt and the trapping of fluids (water, fuel, hydraulic oil etc.).

13.1.2 Currently Installed Wiring It is expected that the bulk of currently installed power wiring will be usable for MIL-STD-1760A Primary applications. This is not, however, expected to be the case for the Auxiliary application. If Maverick has been, or is expected to be, included in the aircraft weapon inventory, then a video line is also liable to be available. It is expected that, with very few exceptions, the rest of the wiring will require installation.

13.1.2.1 Power Installation

ISSUE: What 28 Volt DC wire will already be fitted and will be usable?

GUIDANCE: Basically each Primary ASI requires four X 28 Volts DC facilities, which have medium and light capability namely:

a. 2 X 28 Volts DC at 10 amperes (maximum steady state) to be used for 28V DC Power 1 and 28V DC Power 2

b. 2 X 28 Volts DC at 100 milliamperes (maximum - steady state) to be used for Release Consent and Interlock

This installation requires 2 X 16 AWG and 2 X 20 AWG wires respectively and MIL-STD-704 is acceptable in all four cases. It is very likely that at least the two medium capability wires are already installed.

ISSUE: What 115V AC wire will already be fitted and be usable?

GUIDANCE: It is believed that at least one phase will probably be available at most stations where current weapons having a semi-smart but analog capability have been fitted, such as AIM-9 or AGM-65.

ISSUE: What initial Auxiliary power capability will there be?

GUIDANCE: It is unlikely that 28V DC or 115V AC 3 Phase will be currently be installed out at pylon stations. Because the installation requires the use of 10 AWG cable, then the Auxiliary requirement should be very well justified before commencing or planning to fit auxiliary power capability (see also 8.2.1.1b).

ISSUE: Will Auxiliary Interlock be required and available?

GUIDANCE: Auxiliary Interlock will, of course, only be required if the Auxiliary itself is to be utilized. Because the Auxiliary is implemented as an addition to and not in lieu of the Primary it is also unlikely that a fifth 28V DC line will be available.

13.1.2.2. Multiplex Data Bus Installation

ISSUE: What aircraft are likely to have this installation already in place?

GUIDANCE: In reality, only those aircraft that have already implemented AMRAAM and then almost certainly only at specific stations, for example fighter aircraft at current AIM-7 stations.

ISSUE: Is this a straight bus installation using the classic bus layout shown in MIL-HDBK-1553?

GUIDANCE: Not necessarily if battle damage is to be minimized. Routing the bus via the wingtips in a continuous run, leaves the bus venerable to an open circuit due to battle damage or even a straight wire failure. Although the bus should be dual standby redundant, it is suggested that other alternatives are available and should be looked at (reference SAE AIR 4013). This issue is also considered in section 10.

13.1.2.3 Multiplex Data Bus Address Installation

ISSUE: What aircraft are likely to have this installation already in place?

GUIDANCE: Cross refer to that given for the Multiplex Bus in 13.1.2.2 above.

ISSUE: What part of the aircraft is affected?

GUIDANCE: Several points arise from this simple question. Where the ASI is fitted to a pylon, the modification should be restricted to the pylon. Where the ASI is fitted adjacent to a hard point, then the modification is restricted to the aircraft. In neither case are the connector contacts to be "daisy chained," this is illegal because it requires two wires in one contact. Other

means, such as module connectors, must be used. It may be necessary to involve structure upstream of the pylon if the pylons are:

a. Not "handed"
b. Interchangeable between stations on the same side of the aircraft

This is to avoid assignments/changes occurring when pylons are fitted/replaced.

13.1.2.4 Low Bandwidth Installation

ISSUE: What aircraft are likely to have this installation already in place?

GUIDANCE: The current wiring typically used for AIM-9 audio does not meet the MIL-STD-1760 requirements. Deficiencies are likely to be centered on the need for a screened two wire signal and the higher bandwidth. Therefore, it must be assumed that this will be a new installation. It should also be noted that this is likely to be of point to point design.

13.1.2.5 High Bandwidth Installation

ISSUE: Will existing cable be suitable?

GUIDANCE: The cable currently fitted is almost invariably used for video and has an impedance of between 90 and 100 ohms. While this cable will probably be adequate in the short term, it does not meet the MIL-STD-1760 requirements and consideration should be given to its replacement, at the earliest opportunity, by the 75-ohm cable required by MIL-STD-1760. The 50-ohm installation will be a new installation and it is quite imperative that this is implemented correctly. Particular attention should be paid to the use of suitable contacts in the aircraft connectors. The prime reasons for this are the 1.6 GHz and VSWR requirement of MIL-STD-1760 which will be of prime importance the first time a store with GPS provisions is fitted.

13.1.2.6 Interlock Line Installation As discussed previously, the interlock implementation is intended to be derived from 28V DC using MIL-STD-704 characteristics.

ISSUE: Is interlock a positive requirement?

GUIDANCE: Interlock provision is required by MIL-STD-1760. However, neither aircraft nor store are required to use it. If existing circuits, power or otherwise, are being added to provide the interlock requirement, then the wiring needs routing via the SMS or some means of communicating "interlock connected" status to the SMS.

ISSUE: Must the Interlock Return be isolated?

GUIDANCE: This is dependent solely on the Aircraft and SMS requirements. Originally the return was to be connected directly to 28V DC Power 1 return, that is zero volts. However, this was modified to allow the Aircraft/SMS to implement alternative approaches having considered the monitor circuit susceptibility to zero volt noise and injection of noise into the LRU.

13.1.2.7 Release Consent Installation Release consent is a safety critical signal required by the standard to be used in conjunction with certain bits of Critical Control 1 word.

ISSUE: Are straight installation rules specified for this signal?

GUIDANCE: No rules are specified for the installation, only for the signal parameters across the interface. This is a 28V DC line using MIL-STD-704 characteristics and has no other specified requirements in terms of electrical characteristics, even return is via 28V DC Power 2 return. However, discussions over the years have indicated that when Release Consent is in use its implementation should be visible. This breaks down to "not software generated, only steered." Note that its initiation should be via a Weapon Release button or Trigger, to keep the safety window as small as possible. See also paragraph 8.2.2.2.

13.1.3 Electronic Hardware Certain hardware will need to be fitted either to existing black boxes or in new black boxes or both, namely:

a. MIL-STD-1553 Bus Controller
b. Avionic to SMS Digital Interface
c. Digital Control - Initial or increased capacity
d. Bandwidth switching
e. Power Control - Initial or increased capacity
f. Interlock/Release Consent circuitry

13.1.3.1 Bus Controller A stores management bus, and therefore an associated controller, is no longer mandated by the standard.

ISSUE: Should a separate MIL-STD-1760 bus be installed?

GUIDANCE: The safety requirements of an avionic data bus, differ vastly from that of a data bus on which weapons communicate. Within MIL-STD-1760, subaddresses 19 and 27 are restricted to Nuclear Weapon use only and it is already very apparent that the avionics community does not authorize such reservations. MIL-STD-1760 carries a specific restriction on inadvertent critical control/ authority word generation over and above any MIL-STD-1553 requirements. MIL-STD-1760 typically dictates specific data formatting for all the foreseeable "Target Attainment" data entities, which are only recommended in MIL-HDBK-1553. It would therefore seem sensible, taking all of the above points into account, to indeed install a Data Bus specifically for stores. Since none of the above considerations would prevent that bus also being used for SMS purposes then this could be a Stores Management bus. Note that this would be a MIL-STD-1553 Multiplex Data Bus with certain restriction and exceptions, but no changes.

13.1.3.2 Avionic to SMS Digital Interface Much of the data to be received by MIL-STD-1760 stores, originates from Avionic Equipment other than the SMS. The reverse is also true, but to a much lesser extent.

ISSUE: How should "Avionics Data" be transferred into stores?

GUIDANCE: Although it is expected that the data words will be in the desired format (MIL-STD-1760A Notice 3 has avoided, wherever possible, changes to MIL-HDBK-1553 formats), the AIS has to format these words into store required messages carrying such things as header, checksum etc. The AIS has, therefore, to provide the requisite Remote Terminal(s) to receive and transmit data from the Avionic Bus as part of its "data service" to MIL-STD-1760 stores.

13.1.3.3 Digital Control Digital control will need to be modified or added to current aircraft.

ISSUE: What sort of modifications are likely to be required on aircraft which already have a digital AIS or SMS or both?

GUIDANCE: With the requirement to communicate digitally with stores, which MIL-STD-1760 implementation means, three aspects will need to be considered:

a. Processor capacity
b. Processor speed
c. Store capacity, both volatile and non-volatile

In order to ease the burden on the above topics, consideration may be given to utilizing the Bus Controller processor to handle the data message formatting etc discussed in paragraph 13.1.3.2. Indeed, if as discussed in paragraph 13.1.3.1, this is a new Bus Controller, then consideration should be given to additionally utilizing it for the bulk of data word/message manipulation as part of its management duties.

ISSUE: What sort of modifications are likely to be required on aircraft which have no digital AIS or SMS?

GUIDANCE: The decision to retrofit these aircraft can only be taken in conjunction with the decision on what digital avionics are to be fitted. MIL-STD-1760 stores data is largely taken from Avionics equipment and of course this has to be available. If it is, then partitioning of the MIL-STD-1760 requirements between at least two processors (say the Armament Bus Controller Processor and the SMS processor) needs to be considered very carefully when assessing capacity, speed and store.

13.1.3.4 Bandwidth Switching This topic covers both high and low bandwidth switching, but discussed together.

ISSUE: What bandwidth switching is likely to be available on current aircraft?

GUIDANCE: Current requirements, for say AGM-65 and AIM-9, will require aircraft to be fitted with a video line (around 90 ohm impedance) and a wire (sometimes shielded) capable of carrying a crude signal in the audio range. In order to connect the weapons to the video display or intercom, as appropriate, some form of simple switching is provided. Consideration should not therefore be given into extending this facility, but rather that a totally new installation be planned. If all bandwidth switching takes place in a special to type LRU, then growth can be easily provisioned for the switching and possibly to extend the use of the Low Bandwidth interface (see MIL-STD-1760A Note 6.9).

13.1.3.5 Power Control Power control is likely to be affected in three areas, namely:

a. 28V DC Power 1 and Power 2 switching requirements
b. 115V AC deadfacing
c. Capacity

ISSUE: Do 28V DC Power 1 and 28V DC Power 2 require separate control?

GUIDANCE: Yes, MIL-STD-1760 is quite specific on the uses to which each supply may be put and this governs the requirement for separate switching.

ISSUE: Why and when does the 115V AC require deadfacing?

GUIDANCE: The 115V AC supply (all three phases) is required to be isolated from the ASI whenever no store is physically connected to the ASI. Also, the supply must be isolated before connector disconnect during store employment. The reason for this requirement is that the

connector Dielectric Withstanding Voltage requirements cannot otherwise be met at altitudes above 40,000 feet approximately.

ISSUE: Is capacity likely to be adequate?

GUIDANCE: Power capacity, as required by MIL-STD-1760, is only given as complying with the aircraft system specification. Power switching capacity, because of the reasons discussed earlier, is unlikely to be sufficient.

13.1.3.6 Interlock/Release Consent Circuitry Interlock interrogation, unlike the wire and contact provision, is an aircraft option whereas Release Consent is not.

ISSUE: Should interlock interrogation be implemented?

GUIDANCE: It is believed that at least two benefits arise from the ability to interrogate mating of the MSI to the ASI, (or indeed MSI to CSSI or CSI to ASI), namely:

a. Store electricaly connected/disconnected
b. Non-critical Store on Station detection

Therefore Interlock should indeed be implemented.

ISSUE: Should Interlock be used for deadfacing power to the connector?

GUIDANCE: For the reasons discussed under 13.1.3.5, it is recommended that this technique is terminated as soon as is practical.

ISSUE: What circuitry is required for Interlock?

GUIDANCE: Very little and this should be kept as close to the ASI as possible. If a data bus is available, and accessible, from pylon to ASI, then the interlock data should be encoded for transmission on this bus.

ISSUE: What circuitry is required for Release Consent?

GUIDANCE: As discussed earlier, the Release Consent implementation should be made visible. Therefore it is considered that that generation should be a switching network actuated from either Trigger or Weapon release and only steering and/or final connection, should be software controlled. The use of electro-mechanical switches is recommended as they also are easily visible.

13.1.4 Avionics Interface In order to increase the chances of target kill, it is expected that all future weapons will be designed with a MIL-STD-1760 interface and will expect to utilize a large quantity of Avionics Data.

ISSUE: What avionics data does MIL-STD-1760 demand from the aircraft?

GUIDANCE: Actually, none. Many people assume, quite incorrectly, that MIL-STD-1760 places a requirement on the aircraft to provide the MIL-STD-1760 Appendix B data entities. Whereas in fact MIL-STD-1760 only standardizes the transfer of that data across the ASI if:

a. The store requires it.
b. It is available from the aircraft.

This actually means, therefore, that the situation will be no different from that currently being enjoyed, in that the store will be fitted to:

a. Those aircraft who have the avionics equipment to support its full mission capability.
b. Those aircraft who have enough avionics equipment to support its mission and give it a viable capability.

One further important aspect to note is that MIL-STD-1760 stores should have the capability to provide much more information about their true state and this data will be able to be presented to the aircrew via the avionics equipment.

13.2 Testing This topic breaks into three main areas, namely:

a. System Design Verification
b. Aircraft Build Standard Verification
c. Service Testing

13.2.1 System Design Verification This area breaks down again, into:

a. Positive Tests Required
b. Design Verification by Inspection
c. EMC
d. Safety Analysis

13.2.1.1 Positive Testing

ISSUE: What part(s) of the MIL-STD-1760 installation should be candidates for positive testing?

GUIDANCE: Basically those interfaces which are networked, namely: the High Bandwidth, Low Bandwidth, and Multiplex Data Bus. Full integration testing must be made on all three of these installations with particular attention being paid to the VSWR requirements of High Bandwidth 1 and also the MIL-STD-1553 minimum voltage requirements, both receive and transmit, at the ASI. Note that a similar exercise should be considered for the power installation where, because aircraft size dictates long cable runs, out of specification voltage drops may be present.

13.2.1.2 Verification by Inspection

ISSUE: What part(s) of the MIL-STD-1760 installation could be considered for design verification?

GUIDANCE: Basically, all the power and discrete lines fall into this category, although some minor testing, such as stabilization times, may be considered.

13.2.1.3. EMC

ISSUE: What EMC testing, if any, should be considered?

GUIDANCE: Of prime importance are those tests associated with noise susceptibility, both from external to the MIL-STD-1760 wiring and also crosstalk internal to the MIL-STD-1760 wiring. Although the other tests are considered to be less important, they are not considered to be invalid.

13.2.1.4 Safety Analysis It is imperative that a full safety analysis be carried out on any part of the AIS that in the event of component or design defect has the capability to:

a. Generate erroneous data onto the Multiplex Data Bus. This would eventually of course contain an executable safety critical command.

b. Erroneously energize Release Consent circuitry whether or not safety critical data are involved.

13.2.2 Aircraft Build Standard Verification This is an aircraft production test and as such, testing can be limited to those components which are not LRUs. Typically these would be connectors and of importance here would be the High Bandwidth 1 VSWR and MIL-STD-1553 voltages. Also, stubbing transformers, again for MIL-STD-1553.

13.2.3 Service Testing It is not considered necessary to have in service test equipment for routine testing. However, sophisticated test equipment should be provided that will separately and fully test each part of the MIL-STD-1760 installation and assist with both ease and quickness of failure location.

13.3 Phased MIL-STD-1760 Implementation Implementation may be phased, but apart from one aspect, namely the high bandwidth networking, this is of dubious benefit. It is important to note that until all of the required provisions have been implemented the interface is not MIL-STD-1760 but may have some limited value.

ISSUE: What part of the installation should be implemented first?

GUIDANCE: All of the connectors and wiring (for the reasons discussed earlier), the multiplex data bus electronics (because even the first MIL-STD-1760 store will require this), and the power control extension (because all stores use power). Again, for the reasons discussed earlier, Release Consent should also be installed (albeit only rail launch stores, such as AMRAAM, will have this requirement).

ISSUE: What signals are left and when should they be installed?

GUIDANCE: What is left is basically High and Low Bandwidth and, providing the wiring is installed and located adjacent to the space earmarked for the High and Low Bandwidth switching unit, no further work needs doing until the first MIL-STD-1760 store requiring this facility is implemented.

14. INDEX

14.1 Content This section consists of two parts, namely an Index A and an Index B.

14.1.1 Index A Table 14.1 contains prime issues, in alphabetical order, cross referenced to this document's paragraphs (Appendix A) and MIL-STD-1760A paragraphs.

14.2.2. Index B Table 14.2 contains major subjects from MIL-STD-1760A, cross referenced to this document's paragraphs. These subjects are in MIL-STD-1760A paragraph order.

TABLE 14.1 Index A

SUBJECT	TOPIC	APPENDIX A PARAGRAPHS	MIL-STD-1760A PARAGRAPHS
ADDRESS	location	10.1.4.3.2	5.1.1.6.1
		13.1.2.3	B40.1.1.1
	variable	10.1.4.3.1	
AIS		7.1	
		7.1.1	
		8.1	
ARMING	store	7.4.6	B40.2.2.1
		8.2.6	B40.2.2.2
		10.2.1	B40.3.1.8
		10.2.2	B40.3.1.9
		11.1.6	
BUILT-IN-TEST		9.2.3.2	
		10.2.4	
COST	development	7.2.1.3	
	ownership	7.2.1.1	
	production	7.2.1.2	
CRITICAL	state of store	7.4.2	B40.2.2.1
		8.2.2	B40.2.2.2
		9.2.2.2	
		11.1.2	
		11.1.6	
DATA	from store	7.4.4	B40 through B40.3.5.42
		8.2.4	
		9.2.2.4	
		10.2.2	
		11.1.7	
		11.1.9	
		11.1.10	
		11.1.13	

TABLE 14.1 Index A (continued)

SUBJECT	TOPIC	APPENDIX A PARAGRAPHS	MIL-STD-1760A PARAGRAPHS
DATA (continued)	to store	7.4.3	B40 through B40.3.5.42
		8.2.3	
		9.2.2.3	
		10.2.2	
		11.1.7	
		11.1.9	
		11.1.10	
		11.1.13	
DOCUMENTATION		9.4	
		11.2.9	
ENVIRONMENTAL		8.3.5	
		9.2.2.16	
		10.2.8	
		13.2.1.3	
FUZING		7.4.6	B40.2.2.1
		8.2.6	B40.2.2.2
		9.2.2.6	B40.3.1.8
		10.2.2	B40.3.1.9
		11.1.6	
GROWTH		7.5	
		8.3.1	
		9.2.2.12	
		10.1.8	
HIGH BANDWIDTH	networking	10.1.1.1	5.1.1.1.1
		13.1.2.5	6.3
		13.1.3.4	
	switching elements	10.1.1.2	
IMPLEMENTATION	of the AIS	7.1.2	4.2
		10.1	
	partial	7.1.3	4.2
		13.3	
INTEGRATED AVIONICS	impact	7.1.4	
INTERFACES	crew	7.4.10	5.1.1.4.1
		8.2.10	
		9.2.2.10	
INTERFACING	aircraft analog	8.4.4	5.1.1.1
		9.3.5	5.1.1.3
		10.1.1	
		10.1.3	
		12.3	
		13.1.2.4	
		13.1.2.5	
		13.1.3.4	

TABLE 14.1 Index A (continued)

SUBJECT	TOPIC	APPENDIX A PARAGRAPHS	MIL-STD-1760A PARAGRAPHS
INTERFACING (continued)	aircraft connectors	8.4.5	5.1.2
		9.3.1	
		10.1.1.2.3	
		10.1.7	
		10.2.5	
		10.2.6	
		12.1	
		13.1.1	
	aircraft digital	8.4.2	5.1.1.2
		9.3.3	
		10.1.2	
		12.2	
		13.1.2.2	
		13.1.3.1	
		13.1.3.2	
		13.1.3.3	
		13.1.4	
	aircraft discretes	8.2.3.5.2	5.1.1.4
		8.4.3	
		9.3.4	5.1.1.5
		10.1.4	5.1.1.6
		12.4	5.1.1.7
		12.5	
		13.1.2.3	
		13.1.2.6	
		13.1.2.7	
		13.1.3.6	
	aircraft power	8.4.1	5.1.1.8
		9.2.3.6	5.1.1.9
		9.3.2	
		12.6	
		13.1.2.1	
		13.1.3.5	
	store	7.4.1	5.2
		8.2.1	
		9.2.2.1	
INTERLOCK	auxiliary	10.1.6.2	5.1.1.5
	circuitry	10.1.4.2.2	5.1.1.5.1
		13.1.3.6	
	monitor location	10.1.4.2.1	5.1.1.5.1
		13.1.3.6	
INVENTORY	stores	7.4.9	5.1.1.12
		8.2.9	B40.2.2.3
		9.2.2.9	
		11.1.5	

TABLE 14.1 Index A (continued)

SUBJECT	TOPIC	APPENDIX A PARAGRAPHS	MIL-STD-1760A PARAGRAPHS
JETTISON	store	7.4.8	FOREWORD
		8.2.8	B40.3.1.3
		9.2.2.8	
		10.2.1	
		10.2.2	
		11.1.6	
LOW BANDWIDTH	connections	10.1.3.3	5.1.1.12
	networking	10.1.3.1	5.1.1.3.1
		13.1.2.4	
		13.1.3.4	
	switching elements	10.1.3.2	
MAINTAINABILITY		8.3.3	
		9.2.2.14	
MASS		8.3.4	
		9.2.2.15	
MODULE STANDARDIZATION		10.2.3	
MULTIPLEX DATA BUS	critical signals	10.1.2.1	B40 2.2.1
			B40.2.2.2
	partitioning	10.1.2.3	
	stubbing	10.1.2.4	
	topology	10.1.2.1	5.1.1.2.2
		13.1.2.2	
		13.1.3.1	
NUCLEAR CONTROL		7.4.11	1.3
		8.2.11	B40.2.2.1
		9.2.2.11	B40 2.2.2
PARTITIONING	system functional	7.3	
		9.2	
	system guidance	7.4	
		9.5	
POWER	auxiliary	10.1.6.1	5.1.1.8.2.2.2
		13.1.2.1	5.1.1.9.2.2.2
	connections	10.1.5.3	5.12
	isolation	10.1.5.2	5.1.1.8.2.3
			5.1.1.9.2.3
	networking	10.1.5.1	5.1.1.8.1
		13.1.2.1	5.1.1.9.1
		13.1.3.5	
	switching	10.1.5.2	5.1.1.8.2.5
			5.1.1.9.2.5
	voltage specific	10.1.5.4	5.1.1.8
			5.1.1.9
PROCUREMENT	AIS	7.1.2	

TABLE 14.1 Index A (continued)

SUBJECT	TOPIC	APPENDIX A PARAGRAPHS	MIL-STD-1760A PARAGRAPHS
RELEASE	Store	7.4.7	
		8.2.7	B40.2.2.1
		9.2.2.7	B40.2.2.2
		10.2.1	
		10.2.2	
		11.1.6	
RELEASE CONSENT	information transfer	10.1.4.1.3	5.1.1.4
	elements	10.1.4.1.2	
		10.2.1.1	
		10.2.1.2	
	switching location	10.1.4.1.1	5.1.1.4.1
		10.2.1.2	
		13.1.2.7	
RELIABILITY		8.3.2	
		9.2.2.13	
SELECTION	store	7.4.5	B40.2.2.1
		8.2.5	
		9.2.2.5	
		11.1.5	
SOFTWARE	algorithm data check	11.1.4	B40.1.5.2
	architecture	11.2.5	
	configuration control	11.2.9	
	co-ordinate systems	11.1.9	B40.3.3
			B40.3.4
			B40.3.5
	entities	11.1.10	B40.3
	formats base message	11.1.12	B40.2.1
	formats data	11.1.11	B40.3
	generic implementation	11.1.1	
	interfaces	11.2.7	
	ISA	11.2.3	
	language Ada	11.2.2	
	language selection	11.2.1	
	mass data transfer	11.1.13	B40.2.3
	power up sequence	11.1.2	5.1.12
	processing requirements	11.2.4	
	protocol basic	11.1.8	B40.1.5
	restrictions data bus	11.1.7	B40.1.1.3
	re-usable	11.2.6	

TABLE 14.1 Index A (continued)

SUBJECT	TOPIC	APPENDIX A PARAGRAPHS	MIL-STD-1760A PARAGRAPHS
SOFTWARE (continued)	safety critical control and monitor	11.1.6	B40.2.2.1
			B40.2.2.2
	store identification	11.1.5	B40.2.2.3
	sub-addresses	11.1.3	B40.1.1.2
	support	11.2.8	
STRUCTURE GROUND	auxiliary	10.1.6.3	5.1.1.7.1
	primary	10.1.4.4	5.1.1.7.1
TIMESCALES	compatibility store/aircraft	7.2.2.2	
	development	7.2.2.1	
VERIFICATION OF DESIGN	EMC	13.2.1.3	
	inspection	13.2.1.2	
	safety analysis	13.2.1.4	
	test	12.2.1.1	
VOLUME		8.3.4	
		9.2.2.15	

TABLE 14.2 Index B

MIL-STD-1760A			APPENDIX A
PARAGRAPH	SUBJECT	TOPIC	PARAGRAPHS
5.1.1.1	HB interfaces		5.2.1.1
5.1.1.1.1		transfer capacity	8.2.3.5.1
5.1.1.1.2		electrical characteristics	10.1.1
			12.3
			13.1.2.5
			13.1.3.4
5.1.1.2	Digital data multiplex interface		5.2.1.3
5.1.1.2.1		functional characteristics	10.1.2.1
			11.1.3
			10.1.2.4
5.1.1.2.2		electrical characteristics	12.2
5.1.1.3	LB interface		5.2.1.2
5.1 1.3.1		transfer capacity	8.2.3.5.1
5.1.1.3.2		electrical characteristics	10.1.3.1
			10.1.3.2
			10.1.3.3
			12.2
			13.1.2.4
			13.1.3.4

TABLE 14.2 Index B (continued)

MIL-STD-1760A			APPENDIX A
PARAGRAPH	SUBJECT	TOPIC	PARAGRAPHS
5.1.1.4	Release consent interface		5.2.1.5
5.1.1.4.1		transfer capacity	8.2.3.5.2
			9.2.2.1.4
5.1.1.4.2		electrical characteristics	10.1.4.1
			10.2.1
			13.1.2.7
			13.1.3.6
5.1.1.5	Interlock interface		5.2.1.6
			5.2.2.1
5.1.1.5.1		electrical characteristics	10.1.4.2
			10.1.6.2
			13.1.2.6
			13.1.3.6
5.1.1.6	Address interface		5.2.1.4
5.1.1.6.1		transfer requirement	10.1.4.3.2
		address assignment	10.1.4.3.1
		electrical characteristics	10.2.8.5
			12.5
			13.1.2.3
5.1.1.7	Structure ground		5.2.1.7
			5.2.2.2
		characteristics	10.1.4.4
			10.1.6.3
5.1.1.8	Power interface 28V DC		5.2.1.8
			5.2.2.3
5.1.1.8.1		transfer requirement	8.4.1
			9.2.3.6
			9.3.2
			10.1.5.1
			10.1.6.1.1
			13.1.2.1
5.1.1.8.2		electrical characteristics	10.1.5.1.2
			10.1.5.2
			10.1.5.4.1
			10.1.5.4.2
			12.6
			13.1.2.1
			13.2.1.2

TABLE 14.2 Index B (continued)

MIL-STD-1760A			APPENDIX A
PARAGRAPH	SUBJECT	TOPIC	PARAGRAPHS
5.1.1.9	Power interface 115V AC		5.2.1.9
			5.2.2.4
5.1.1.9.1		transfer requirements	8.4.1
			9.2.3.6
			9.3.2
			10.1.5.1
			10.1.6.1.2
			13.1.2.1
5.1.1.9.2		electrical characteristics	10.1.5.1.2
			10.1.5.2
			10.1.5.4.3
			10.1.6.1.2
			12.6
			13.1.2.1
			13.2.1.2
5.1.1.10	Power Interface 270V DC		10.1.8.2
5.1.1.11	Fiber Optic Interface		10.1.8.1
5.1.1.12	Initialization		11.1.2
5.1.2	ASI connector characteristics		10.1.1.2.3
			10.1.7
			12.1
			13.1.1
5.1.3	Electromagnetic compatibility		8.3.5.1
			10.2.8
			13.2.1.3
B40	Requirements of the logical element		11.1.1
B40.1.1.2		sub-address mode field	11.1.3
B40.1.1.3		mode commands	11.1.7
B40.1.5		protocol execution	11.1.8
B40.1.5.2		checksum	11.1.4
B40.2.1		base message data format	11.1.12
B40.2.2.1		mission store control	11.1.6
B40.2.2.2		mission store monitor	11.1.6
B40.2.2.3		store description	11.1.5
B40.2.3		mass data transfer	11.1.13
B40.3		data entities with	11.1.9
B40.3.3		coordinate systems	11.1.9
B40.3.4			11.1.9
B40.3.5			11.1.9

MIL-STD-1760 APPLICATION GUIDELINES

APPENDIX B

Rationale for Appendix A

CONTENTS

Paragraph	Title	Page
1.	INTRODUCTION	287
1.1	Purpose	287
1.2	Scope	287
1.3	Document Structure	287
2.	RATIONALE FOR APPENDIX A SECTION 7	288
2.1	Overall AIS Definition	288
2.1.1	AIS Definition	288
2.1.2	Strategy	288
2.1.3	Integrated Avionics	288
2.2	Program Objectives	288
2.3	Functional Partitioning	288
2.3.1	AIS Incorporation with SMS function	288
2.3.2	Summary	290
2.4	Weapon System Partitioning Guidance	291
2.4.1	Store Interface	291
2.4.2	Store State	293
2.4.3	Data to Store	294
2.4.4	Data from Store	295
2.4.5	Store Selection	296
2.4.6	Store Arming	298
2.4.7	Store Release	301
2.4.8	Store Jettison	306
2.4.9	Inventory	307
2.4.10	Crew Interface	309
2.4.11	Nuclear Control	312
2.5	Future Growth Potential	312
3.	RATIONALE FOR APPENDIX A SECTION 8	313
3.1	Approach	313
3.2	AIS Functional Performance	313
3.2.1	Store Interface Performance	313
3.2.2	Store State	315
3.2.3	Data to Store	317
3.2.4	Data from Store	328
3.2.5	Store Selection	329
3.2.6	Store Arming/Fuzing	331
3.2.7	Store Release	331
3.2.8	Store Jettison	331
3.2.9	Inventory	331
3.2.10	Crew Interfaces	333
3.2.11	Nuclear Control	333
3.3	AIS General Performance	333

CONTENTS - continued

Paragraph	Title	Page
3.3.1	Expansion Provision	333
3.3.2	Reliability	333
3.3.3	Maintainability	336
3.3.4	Volume/Mass	336
3.3.5	Environmental Requirements	336
3.3.6	Miscellaneous	336
3.4	Interfaces	336
3.4.1	Power Supplies	336
3.4.2	Digital Interfaces	338
3.4.3	Discrete Interfaces	338
3.4.4	Analog Interfaces	338
3.4.5	Connectors	338
4.	RATIONALE FOR APPENDIX A SECTION 9	339
4.1	AIS Functional Partitioning	339
4.1.1	Partitioning of External Functions	339
4.1.2	Partitioning of Internal Functions	347
4.2	AIS Internal Interfaces	347
4.2.1	Connectors and Cabling	347
4.2.2	Power Interfaces	347
4.2.3	Digital Interfaces	347
4.2.4	Discrete Interfaces	347
4.2.5	Analog Signals	348
4.3	System Design Documentation	349
5.	RATIONALE FOR APPENDIX A SECTION 10	351
5.1	MIL-STD-1760A Implementation Guidance	351
5.1.1	High Bandwidth Issues	351
5.1.2	MIL-STD-1553 Issues	355
5.1.3	Low Bandwidth Issues	358
5.1.4	Discrete signal issues	361
5.1.5	Power Issues	363
5.1.6	Auxiliary signal set issues	368
5.1.7	Connector Issues	368
5.1.8	Reserved Provisions Issues	369
5.2	Detailed Guidance on Specific Issues	369
5.2.1	Safety Critical Switching	369
5.2.2	Safety Critical data transfer	370
5.2.3	Use of Standard Modules	371
5.2.4	Built in test circuitry	371
5.2.5	Connectors	371
5.2.6	Connector pin allocations	371
5.2.7	Physical Design of Equipment	372
5.2.8	Electromagnetic Considerations	372

CONTENTS - continued

Paragraph	Title	Page
6.	RATIONALE FOR APPENDIX A SECTION 11	373
6.1	MIL-STD-1760 LDD Implementation	373
6.1.1	Overall LDD Impacts	373
6.1.2	Store Power Up Timing	373
6.1.3	Reduction of Power Up Time	373
6.1.4	Error Checking	374
6.1.5	Subaddress Allocation	374
6.1.6	Checksum Generation Point	374
6.1.7	LDD Checksum Computation	374
6.1.8	Use of Store Description Protocol	375
6.1.9	Inventory Data Base Structure	375
6.1.10	Usage of Standard Software	375
6.1.11	Software Structure	375
6.1.12	Usage of Monitor Message	376
6.1.13	Software Design for State Control	376
6.1.14	Status Word Bit Effects	376
6.1.15	Mode Code Effects	377
6.1.16	Vector Word Effects	377
6.1.17	Checksum Failure Recovery	377
6.1.18	Error Management	377
6.1.19	Asynchronous Message Scheduling	378
6.1.20	Subsystem Flag Response	378
6.1.21	Built in Test Log (BIT LOG) Extraction	378
6.1.22	Busy Bit Management	378
6.1.23	Data Busy Error Handling	379
6.1.24	Retry Strategy	379
6.1.25	Checksum Failure Recovery	379
6.1.26	Size and Performance Improvements	379
6.1.27	Benefits of Common Data Entities	380
6.1.28	Discrete Control Management	380
6.1.29	System Time Management	380
6.1.30	Usage of Store IBIT Time	381
6.1.31	Fuzing Control	381
6.1.32	Validity Word Management	381
6.1.33	Header Code Management	382
6.1.34	Standard Data Word Benefits	382
6.1.35	Base Message Usage	382
6.1.36	Generic Software Development	382
6.2	General Software Issues	383
6.2.1	Language Selection	383
6.2.2	Effects of Package Structure	383
6.2.3	Package Development for Data Only	385
6.2.4	Ada Tasking	385
6.2.5	Dynamic Data Structures	385
6.2.6	Exceptions	385
6.2.7	Genetic Units	386
6.2.8	Data Hiding	386

CONTENTS - continued

Paragraph	Title	Page
6.2.9	Separate Compilation	386
6.2.10	Constraint Checking	386
6.2.11	Attributes	386
6.2.12	Data Abstraction	387
6.2.13	Portability	387
6.2.14	Instruction Set Architectures	387
6.2.15	Processing Power	387
6.2.16	Code Memory	388
6.2.17	Data Memory	388
6.2.18	Software Architectures	388
6.2.19	Reusable software	388
6.2.20	Software Interfaces	390
6.2.21	Program Support Environment	390
6.2.22	Software Configuration Control	390
7.	RATIONALE FOR APPENDIX A SECTION 12	391
7.1	Connectors	391
7.2	Multiplex Data Bus Cable	391
7.3	High Bandwidth Cable	391
7.4	Release Consent and Interlock Cables	391
7.5	Address Line Cable	392
7.6	Power Cable	392
8.	RATIONALE FOR APPENDIX A SECTION 13	393
8.1	Connectors	393
8.2	Power Installation	393
8.3	Multiplex Data Bus Installation	394
8.4	Multiplex Data Bus Address Installation	394
8.5	Low Bandwidth Installation	394
8.6	High Bandwidth Installation	395
8.7	Interlock Line Installation	395
8.8	Release Consent Installation	395
8.9	Bus Controller	396
8.10	Avionic to SMS Digital Interface	396
8.11	Digital Control	396
8.12	Bandwidth Switching	396
8.13	Power Control	396
8.14	Interlock/Release Consent Circuitry	397
8.15	Avionic Interface	397
8.16	Positive Testing	398
8.17	Verification by Inspection	398
8.18	Electromagnetic Compatibility (EMC)	398
8.19	Phased MIL-STD-1760 Implementation	398

CONTENTS - continued

Figure	Title	Page
2.1	Data Transfers Between AIS & SMS	289
2.2	Combined AIS/SMS for New Aircraft	291
2.3	AIS Upgrade to a Basic SMS	292
2.4	Fuzing Times	300
2.5	Release Points and Impact Points	303
2.6	Weapon Dynamics	303
2.7	Critical Switch Implementation AIS	311
3.1	Stressing Case for Data Latency and Update Rates	319
3.2	Seeker Error Due to Latency and Update Rates	321
3.3	Improved Performance Due to Time Tag & Velocity Compensation	322
3.4	Update Rates and BVR Stores	323
3.5	Data Flow through AIS	327
3.6	Data Cycles	327
3.7	Analog Networks for Type A Signals	329
3.8	Store Trajectories	330
3.9	Typical S & RE (based on MAU-12)	332
3.10	Stores in Weapon Bays	333
3.11	Typical Separation Event Sequence	334
3.12	Hang Up Detection	335
3.13	Mission Success Analysis	336
3.14	Relative Contribution to Mission Failure	337
3.15	Probability of Mission Failure (after 1 hour)	337
4.1	Different Digital Transfer Standards for AIS	346
4.2	Partitioning of Buses	349
4.3	Direct Discrete Safety Interlocks	350
5.1	Typical Wiring Required for FDM Approach	352
5.2	High Bandwidth Signal Connectors	355
5.3	Low Bandwidth Signal Connectors	361
5.4	115V AC Switching	367
6.1	Store Control Package Specification	384
6.2	AVS Layered Implementation	389

Table	Title	Page
3.1	Velocity and Acceleration Combinations	320
6.1	Store Targeting Modes via discrete control word 1	380

1. INTRODUCTION

1.1 Purpose The purpose of this document is to provide further rationale for the guidance offered in sections 7 through 13 of Appendix A.

1.2 Scope The information contained herein is taken from the experience gained on the AVS Implementation and, under Other Rationale, from unspecified sources of experience. The latter should be considered as additional rationale provided as support to that already provided in Appendix A. Where information is supplied under RATIONALE, this is in addition to that provided in Appendix A.

1.3 Document Structure This document is structured with its own paragraph numbering system, supporting:

a. The paragraph title, which is a repeat of that in Appendix A.

b. A paragraph number, for example [8.1.3], which is a repeat of that in Appendix A for the title and paragraph under consideration.

c. The issue, which is either a repeat of that in Appendix A or a summary of that in Appendix A, for the title and paragraph number under consideration.

2. RATIONALE FOR APPENDIX A SECTION 7

Paragraphs 2.1 through 2.5 of this section provide rationale derived from the AVS and other sources to support the guidance given in paragraphs 7.1 through 7.5 of Appendix A. Issue statements and subjects have been summarized. Where rationale was supplied in the guidance text, and further provision considered superfluous, then extra rationale is not supplied.

2.1 Overall AIS Definition

2.1.1 AIS Definition [7.1.1]

ISSUE: AIS Functional Boundary.

RATIONALE: No rationale is necessary as this guidance is explanatory material for interpretation of section 7.

2.1.2 Strategy [7.1.2.,7.1.3]

ISSUE: Should full MIL-STD-1760 be required?

RATIONALE: The rationale was provided in the Appendix A guidance and no further rationale is necessary.

2.1.3 Integrated Avionics [7.1.4]

AVS Implementation: The AVS did not implement an Integrated Avionics style architecture although much of the AVS design is relevant to such environments.

RATIONALE: The rationale was provided in the Appendix A guidance and no further rationale is necessary.

2.2 Program Objectives [7.2]

ISSUE: What program objectives have to be defined?

RATIONALE: No further specific rationale is required as this section is a general discussion of factors that require definition before detail design can commence.

2.3 Functional Partitioning [7.3]

2.3.1 AIS Incorporation with SMS function [7.3.1]

AVS Implementation: The AVS incorporates many SMS functions including all core SMS functions together with the AIS function. They include:

- Inventory Display
- Crew SMS Controls
- Store Arming
- Store Jettison
- Power for Existing Stores
- Store Status Display
- Store Selection
- Store Release
- Existing Store Targeting

For each of these functions no problems were encountered with implementing the function in the AIS. In fact the collocation, as opposed to separate implementation, of the AIS and SMS functions enabled overall reductions in software, processing power, data transfers and hardware. The AVS is therefore considered to be representative of a good AIS (and SMS) implementation.

Other Rationale: The rationale for recommending collocation of the AIS and SMS function is based on the following four considerations:

- Data Fusion
- Common sub-functions
- Data Security
- Implementation Difficulty

2.3.1.1 Data Fusion Figure 2.1 shows a representation of some of the functions and data content of typical AIS and SMS functions. Also shown are the cross function data transfers needed to support the functions. Clearly a significant quantity of data will have to be transferred and should this be via a (shared) Avionics data bus (MIL-STD-1553 or PI-Bus) then two effects will be seen:

a. Data transfer delays will reduce the effectiveness of the functions.

b. The Avionics data bus will become significantly loaded due to AIS-SMS data transfers. This will reduce the effectiveness of the whole Avionics function.

The conclusion is that, to reduce these problems the AIS and SMS should, where possible, be the same system.

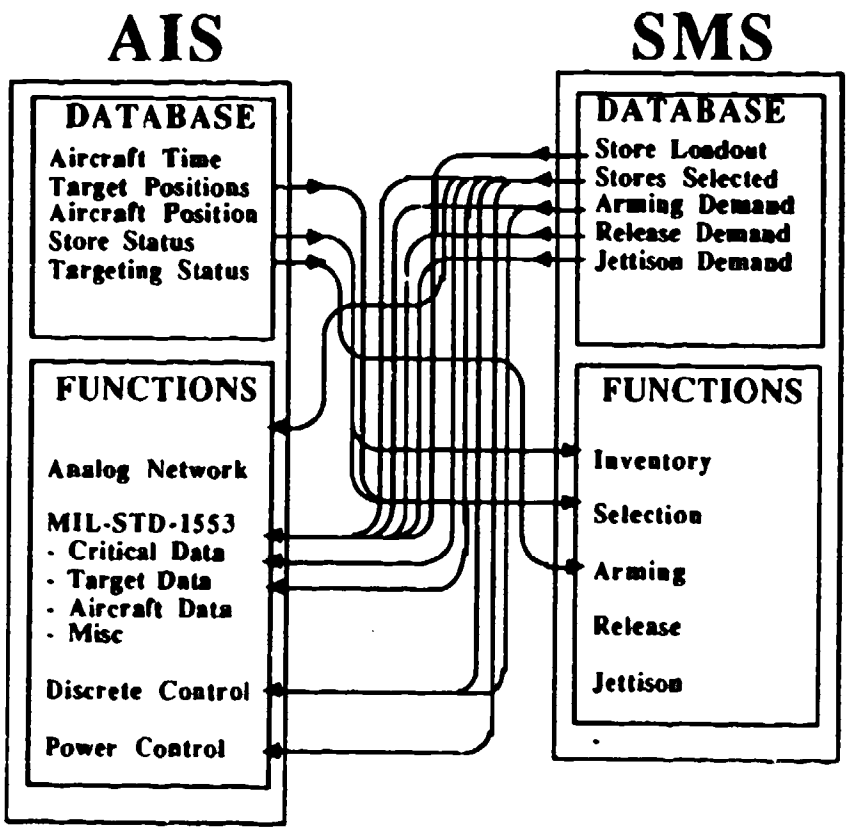

FIGURE 2.1 Data Transfers Between AIS & SMS

2.3.1.2 Data Security MIL-STD-1760 requires that safety critical data be transferred via the ASI-MSI interface using the MIL-STD-1553 and Release Consent signals. This forces the strong requirement that these interfaces be highly secure and a specific provision is included that the probability of critical data demands being inadvertently seen on the MIL-STD-1553 bus should be less than 1 in 100,000 hours. This requires that the information link to the SMS critical demands (Arming, Release and Jettison) and the associated processing of that information by the AIS, be highly secure. This is an extra burden on the AIS design but is a burden already borne by the SMS function. Modern SMS implementations have these two characteristics: Data bus transfer of critical data demands (Arming, Release etc) and design for low probability of accidents - typically less than 1 in 10,000,000 hours. The conclusion is that to avoid unnecessary duplication of the data security burden the AIS and SMS should, where possible, be the same system.

2.3.1.3 Common Sub-Functions From the discussions of Data Fusion and Data Security above it is likely that the designs of the AIS and SMS will include common or highly similar sub-functions. A few examples are listed below. The conclusion is that most of these subfunctions would be unnecessarily duplicated if separate AIS and SMS systems were implemented and therefore, where possible, the AIS and SMS should be the same system.

Sub-functions	AIS	SMS
28 Volt Critical Signal Switching	Release Consent	Fire Signals
Power Supply Switching	28V, 115V	28V, 115V
Safety Critical Data Buses	MIL-STD-1553	MIL-STD-1553 or other
Video Signal Switching	HB 3	Maverick or other video
Audio Switching	LB	AIM-9 audio
Safety Critical Processing	MIL-STD-1553 Critical Control message	Arming, Release, and Jettison decisions

2.3.1.4 Implementation Difficulty The above discussions on Data Fusion, Data Security and Common Sub-Functions have addressed the issues from an ideal "blank paper" position. The recommended solution is shown in figure 2.2 as a combined AIS/SMS for new implementations. The true position is that many MIL-STD-1760 implementations will be upgrades to aircraft with possibly only very basic SMS capabilities. This presents the problem shown in figure 2.3 where the AIS upgrade to the SMS might not be possible for one or more of the following functions:

- Analog Network
- Discrete Signals
- MIL-STD-1553
- Power Switching/Isolation

These points are considered in section 9 of Appendix A. It is clear that in some retrofit or upgrade programs a separate or partially separate AIS will be required.

Conclusion: Where possible implement the AIS and SMS as the same system.

2.3.2 Summary [7.3.2]

ISSUE: Main allocation of Weapon System functions.

RATIONALE: No further rationale is necessary as this included by detail subject area in section 2.4. Paragraph 7.3.2 of Appendix A is a summary of paragraph 7.4.11.

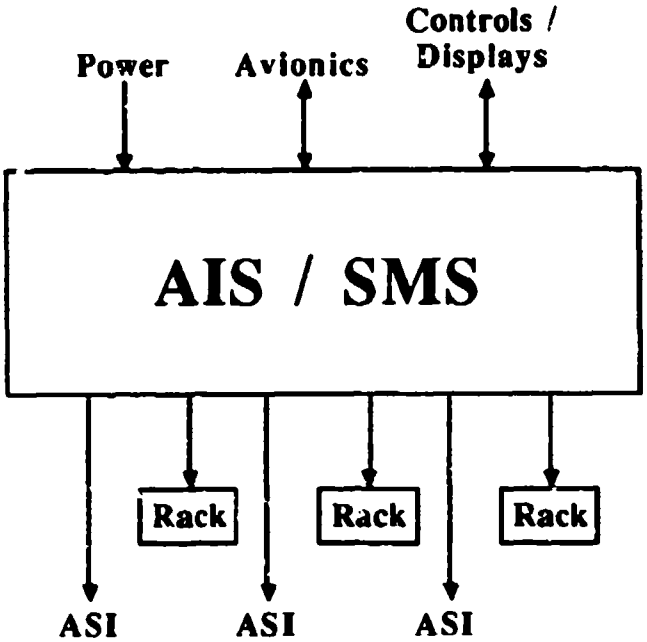

FIGURE 2.2 Combined AIS/SMS for New Aircraft

2.4 Weapon System Partitioning Guidance [7.4]

2.4.1 Store Interface [7.4.1]

2.4.1.1 MIL-STD-1760 ASI [7.4.1.1]

RATIONALE: The rationale was provided in the Appendix A guidance and no further rationale is necessary.

2.4.1.2 MIL-STD-1760 - MSI [7.4.1.2]

RATIONALE: The rationale was provided in the Appendix A guidance and no further rationale is necessary.

2.4.1.3 Non-AEIS Signals [7.4.1.3]

AVS Implementation: The AVS implements two non MIL-STD-1760 stores, Sidewinder and MK-82 Bomb. Substantial commonality exists between signals and wiring required for these stores and the MIL-STD-1760 interfaces. Extra signals were required for:

a. Sidewinder Analog Guidance (common wiring with analog signals of MIL-STD-1760)
b. Launcher Manual uncage and lock discretes
c. Nose and Tail Fuze Signals

Substantial commonality in data and decision processing was achieved. The AVS implementation appears to be representative of a good aircraft implementation.

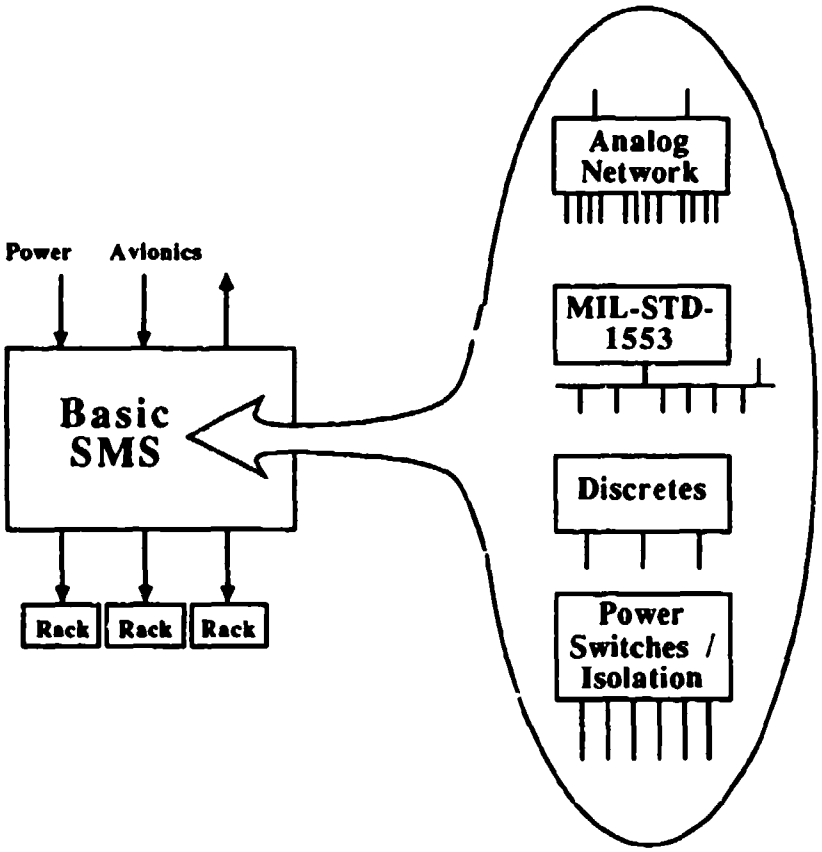

FIGURE 2.3 AIS Upgrade to a Basic SMS

Other Rationale: Most existing stores have power supply signals common with MIL-STD-1760, discrete signals common with other existing stores and a few unique analog or serial signals. Data types (not formats) transferred are a subset of data projected for MIL-STD-1760 stores. (Data source = AAAS WIDS 1-38).

Conclusion: Non AEIS signals should be implemented by the AVS.

2.4.1.4 Suspension Interface [7.4.1.4]

AVS Implementation: The AVS does not implement suspension equipment, they are simulated by the test system.

Other Rationale: Racks and launchers are always procured separately from store electrical interfacing equipment.

Conclusion: Suspension is not a AIS function

2.4.1.5 Post-Launch Interfaces [7.4.1.5]

AVS Implementation: The AVS does not implement post launch interfaces. Only one AVS store, AMRAAM, has a post-launch interface and this could not economically be implemented in the AVS.

Other Rationale: A typical post-launch guided store is Sparrow. This requires post-launch radar illumination of the target. Other post-launch interfaces include laser guided bombs and TOW missiles. These interfaces would be difficult to implement in an AIS.

Conclusion: Exclude post-launch interfaces from the AIS.

2.4.2 Store State

2.4.2.1 Store State Change Prompt [7.4.2.1]

AVS Implementation: Store critical changes are prompted by operator action except where a store either fails or detects a target. The prime change prompt is therefore non-AVS (the Crew).

Other Rationale: Automatic selection, arming, release of stores is not generally accepted because of safety concerns. However, increased automation will be required, particularly in self-defense weapon control, in order to avoid crew overload. The crew will still probably retain overall control through "I consent to selection," and "I consent to release" switches.

Conclusion: Implement State commands in AIS.

2.4.2.2 State Command [7.4.2.2]

RATIONALE: The rationale was provided in the Appendix A guidance and no further rationale is necessary.

2.4.2.3 Store Critical State Monitor [7.4.2.3]

AVS Implementation: The AVS monitors every state change demand to ensure execution (The MIL-STD-1760 critical monitor provides feedback data on state demanded and achieved). Any failure to achieve a state is recorded as a store failure and failed stores are deselected from available inventory. There must be doubts as to how successful the AVS implementation would be in a real application with more simultaneous store state changes, longer times to achieve states and ambiguity in MIL-STD-1760 interpretation. These doubts do not invalidate the successful tight coupling between store and aircraft achieved by the implementation. The MIL-STD-1760 mutually compatible command and monitor formats simplify implementation.

Conclusion: Implement state monitor in AIS.

2.4.2.4 Store State - Power Supply Management [7.4.2.4]

AVS Implementation: The AVS determines what power supplies are required for each store state. Where this is "incorrect" for the store (as in store identification where 115 volts is required for store description), the MIL-STD-1760 service request protocol is used to demand the AVS to supply the correct power.

Other Rationale: Aircraft power architectures follow many varying design philosophies. Some aircraft, such as the B1-B, have implemented all power control as a separate aircraft subsystem. This would bring the whole power system into the AIS. Even in these cases the AIS core would still be implementing Power Supply Management for store states.

Conclusion: Implement Store State-Power Supply Management in AIS.

2.4.3 Data to Store

2.4.3.1 Store to Store Data Source [7.4.3.1]

RATIONALE: The rationale was provided in the Appendix A guidance and no further rationale is necessary.

2.4.3.2 Aircraft Raw Data for Stores [7.4.3.2]

AVS Implementation: The AVS receives from the avionics some raw data and part processed data for onward transfer to stores. The preprocessed data includes data types, such as aircraft position, which have destinations additional to stores. Unique to store processing such as AMRAAM data formatting and coordinate reconversion is executed by the AVS central unit (the PCE). Processing power used for this function is minimized by only processing those data types required at any one time. This selective processing would be difficult to define for the avionics, because the AVS holds the specific store state and data requirements database. The AVS currently requires a large data rate on the avionics bus (50%). This does not cause a problem only because avionics data bus users are not simulated. The data bus usage could be improved by several methods such as: configuring avionics B-1 traffic to match mission conditions, reducing transfer rate of display data, and reducing update rate of target data. The AVS implementation has been proved to work successfully.

Other Rationale: Raw data is present in aircraft systems such as Radar, INS, and Air Data computers. Much of this data will be used in processed form by multiple subsystems. Processing into standard data types and formats should only occur once and, therefore, the best location for the function is the processors for each raw data system. Firing multiple stores at the same target, or with the same aircraft data, will require the generation of individual data sets for each store type and position. This is due to unique formats and individual store station physical alignment. This could become a severe burden for any one system. The aircraft complexity can be partially decoupled from the number of stores selected/fired by delegating processing to the stores where possible.

Conclusion: Raw aircraft data and data processing for non-store use should be in the aircraft, not the AIS.

2.4.3.3 Unique to Store Data Formatting [7.4.3.3]

AVS Implementation: The AVS implements unique to store formatting at several levels:

a. Message formatting for MIL-STD-1760 stores
b. Data word and message formatting for AMRAAM
c. Signal and data type formatting for Sidewinder

None of these subfunctions could be implemented by the store and although they could be implemented by the "avionics," the avionics processing and bus load would increase significantly when multiple stores are selected. This would be avoided if a complex and tightly coupled link between the AVS and Avionics is implemented.

Other Rationale: With the design trend for integrated processing, the AIS boundary in data formatting for avionics data becomes very blurred.

Conclusion: Data formatting solely for stores should be in the AIS.

2.4.3.4 Data Recomputation to Store Axes [7.4.3.4]

AVS Implementation: The AVS implements recomputation to store axes in the following cases: target seeker pointing vectors and INS alignment. For the target seeker case, the simulated store will almost always have to convert pointing vector data to the specific internal alignment and characteristics of the seeker system. The extra burden for a composite, aircraft axis to seeker axis, alignment would be minor or even zero. For the INS case, some of the older store INS systems use mechanical gyros and this leads to a preference for the store to define the axis system to minimize computing required during the store free flight phase. This would require the aircraft or AIS to recompute for store alignment or guarantee close mechanical alignment between store and aircraft. Recent and projected stores with INS, use laser gyros with higher INS computing power. It is therefore possible that the store can recompute the data for the composite transformation aircraft-store - store INS. For AMRAAM the store recomputes angle alignment from aircraft axes to store INS axes, but defines internally a coordinate system position near to the point of launch. The aircraft or AIS then has to recompute target data to this axis system position. If 6 missiles are fired at one time the processing in the AIS for this conversion will be multiplied 6 times.

Other Rationale: In an AIS implementation where most data processing is executed centrally (as in the AVS) then if this reformatting were implemented in the AIS, the processing power required would increase linearly with the number of stores selected. This would not apply in a distributed architecture where each store station had a dedicated processor. Such an architecture would have four significant drawbacks:

a. The processing function would produce a delay for all data even if recomputation was not required. This delay would be additional to the delays caused by buffering avionics data to the multiple processors.

b. The processing function would significantly delay store to store data transfers as two extra conversions would be required.

c. The processing power required would typically require at least a 16 bit processor. This would add significant cost and weight to the AIS.

d. Implementing such a distributed processing architecture would significantly degrade the reliability of the AIS because of the increased number of complex subfunctions.

However, it is likely that a store design, executed independently from aircraft design, will tend to provide the lowest cost store design compliant to MIL-STD-1760 and this will probably require the AIS to execute the unique to store axis conversion.

Conclusion: Axes recomputation will probably be executed by the AIS.

2.4.3.5 Interface to Store [7.4.3.5]

RATIONALE: The rationale was provided in the Appendix A guidance and no further rationale is necessary.

2.4.4 Data from Store [7.4.4]

2.4.4.1 Raw Data Source [7.4.4.1]

AVS Implementation: The AVS test system provided the simulation of stores. Raw data such as seeker displacement torque is not simulated per se. The test system simulates such data by provision of data in MIL-STD-1760 formats at the MIL-STD-1760 interface. This enabled the AVS to avoid implementation of specific to store software for processing store unique data types where these would be, in effect, raw data.

Other Rationale: Many existing stores do not process raw data in the store, but provide instead extremely raw data at the interface. Examples include Sidewinder seeker position voltages and Sparrow tuning sense voltages. These interfaces tend to derive from the need for backwards compatibility of new missile variants with the older versions of the missiles where it was not possible to provide signal processing in the store.

Conclusion: The "data from store" raw data source should clearly be in the store and the processing of this data into MIL-STD-1760 formats should also be in the store.

2.4.4.2 Unique to User Formatting [7.4.4.2]

AVS Implementation: The AVS implements no store to store data communication so no experience can be derived relevant to a store as an end user of store sourced data. All of the MIL-STD-1760 stores in the AVS inventory provide data which has the aircraft as the end user. In each case the AVS executes no data reformatting and the aircraft receives target position data (as an example) in MIL-STD-1760 formats. This enables the AVS to pass data from stores to the aircraft with a minimum of processing power used with maximum of throughput. The alternative implementation where the AVS reformatted the data for multiple end user formats would have increased the processing task by an order of magnitude. It is therefore encouraged that all avionic equipments should transfer data in compatible formats with the reformatting to user unique hardware or software embodied in those avionic subsystems.

Other Rationale: The AVS implementation defined above may be difficult to impose where standard aircraft equipments are in use. In such cases it is likely that the aircraft data for the store will also be in a non MIL-STD-1760 format and in such cases the AIS should implement all of the reformatting. See also [7.4.3.2].

2.4.4.3 Recomputation to User Axes [7.4.4.3]

AVS Implementation: The AVS stores implement the recomputation to user axes in transfer of target position data from the store through the AVS to the aircraft processing and display systems. Because this recomputation is implemented in the store two benefits arise:

a. The AVS processing load is reduced (particularly when targeting multiple stores).

b. The store can communicate directly with other stores by MIL-STD-1553 RT-RT transfers. This is of considerable benefit when one store is a targeting pod.

Other Rationale: See also [7.4.3.4] above.

Conclusion: The Axes Recomputation will probably be executed in the AIS.

2.4.4.4 Interface with Avionics [7.4.4.4]

RATIONALE: The rationale was provided in the Appendix A guidance.

2.4.5 Store Selection [7.4.5]

2.4.5.1 Type Determination [7.4.5.1]

AVS Implementation: In the AVS, type determination was not provided as an AIS function. Store types were categorized as Bombs, Short Range Air-to-Air Missiles, Medium Range Air-to-Air Missiles, and Air-to-Ground Missiles. Determination of type selected was by operator control.

Other Rationale: Store Selection is usually for one of two purposes: threat countermeasures or offensive action. The source data for these processes is usually acquired through non AIS equipment such as Radar, JTIDS, Navigation data, Defensive Aids Systems and Pilot input. In traditional aircraft the air crew have been involved in the decision loop determining which stores to select. With increased use of avionics processing to reduce crew workload and the potential that MIL-STD-1760 pod stores will source some of this data it is clearly possible that the AIS could implement store type determination. However, this should be seen as longer term.

Conclusion: The AIS should not implement Store Type Determination and should instead respond to preprocessed avionic or crew demands.

2.4.5.2 Station Determination [7.4.5.2]

AVS Implementation: In the AVS, station determination was fully implemented by the AVS Process Control Equipment. The algorithms used considered preferred release patterns, location of stores and stores + AVS state of health data in determining which locations to be selected, armed etc. This implementation was fully successful and had it not been implemented would have placed an increased load on the Avionics buses and either the crew or other Avionics.

Other Rationale: Station Determination is now widely implemented automatically in modern aircraft SMS. The SMS, if separate from the AIS, is therefore the only other candidate system for this function. Any separation from the AIS will increase the data load onto the aircraft buses as store and AIS state of health data is required in the station determination process.

Conclusion: Implement Station Determination in the AIS unless it is a separate system from the aircraft SMS.

2.4.5.3 Number Selection [7.4.5.3]

AVS Implementation: In the AVS the number of stores selected was implemented as a crew (non AIS) function. The number selected can be incremented or decremented via the display system.

Other Rationale: The number of stores selected is usually a measure of the amount of threat countermeasures or offensive action required. For similar reasons to those defined in [7.4.5.1] above the number of stores selected will only be an AIS function in the very long term.

Conclusion: Number Selection is a non-AIS function.

2.4.5.4 Store Initialization Management [7.4.5.4]

AVS Implementation: The AVS fully implements many store initialization functions. Excluding inventory determination (see 7.4.9) these functions include:

- Determination and Application of Normal power
- Monitoring for state or state of health problems
- AMRAAM INU data management
- Application of cooling
- Caging/Uncaging of seekers
- System Time transfer and verification

Implementation of these functions caused no problems in the AVS design. To have implemented these functions in a separate system would have been more difficult because of the need to transfer excessive data from the AVS.

Other Rationale: Store initialization functions tend to be store specific. Examples of functions include: INS alignment, Gyro run-up, and Sparrow tuning. With the continuing trend for stores to be "smart," both in function and internal management, the burden of initialization management placed on the aircraft will reduce considerably. It is likely to reduce to, provision of correct data and power for the current store mode indicated by MIL-STD-1760 data. The function will then be clearly very closely linked to the AIS function.

Conclusion: Implement Store Initialization Management in the AIS.

2.4.5.5 Release Package Retention [7.4.5.5]

AVS Implementation: The AVS implemented limited retention of release package data in the Process Control Equipment (PCE) as part of the SMS function also implemented. For bombs, one package of data could be preprogrammed containing:

a. Numbering of Bombs to Release
b. Singles, pairs or Salvo mode
c. Release spacing in meters
d. Arming mode
e. Arming Time (not operator variable)

The implementation is partly unrealistic in that only one package per weapon type is implemented whereas it is more likely that 2 or even 3 would be needed to allow attack of alternative targets. In other respects the implementation is realistic and presented no significant problems in implementing with the AIS function. Operator actions and data transfers, avionics - AIS, were reduced during the critical last seconds before attack by implementing the release packages in the AIS.

Other Rationale: There are alternative locations for release package retention - the pilots head (high crew load results), the mission computer or the display control system. The last two are valid candidates for this function, the display system more so because of the need to display the package to the pilot forces a data transfer, AIS - Display System, if the data are held in the AIS. Consideration of requirements such as updating the packages as stores are released or fail "state of health" checks leads to the AIS as being the best location for retaining Release Package data.

Conclusion: Implement Release Package retention in the AIS if this also implements the SMS functions.

2.4.6 Store Arming [7.4.6]

2.4.6.1 Arming/Fuzing Mode Determination [7.4.6.1]

AVS Implementation: Only limited arming mode determination is possible with the AVS and this is operator determined (Nose or Tail or Nose and Tail fuzing).

Other Rationale: The inputs into determining arming mode include mission type, store type, attack scenario and aircraft paramuters. Although this can be an automated function it is probable that such automation will be limited compared to preselection by crew.

Conclusion: Arming/Fuzing Mode Determination should not be made by the AIS.

2.4.6.2 Arming Implementation [7.4.6.2]

2.4.6.3 Arming/Fuzing Management [7.4.6.3]

AVS Implementation: The AVS implemented full Arming/Fuzing Management as both AIS and SMS functions. Operator and Release Package inputs were Master Arm and Arming Modes. The AVS then executed the following functions:

a. Determined which stores should be armed
b. Generated MIL-STD-1553 Arming Demands to appropriate MIL-STD-1760 stores
c. Energized Release Consent to appropriate MIL-STD-1760 Stores
d. Energized correct power supplies for stores
e. Energized arming at appropriate S + RE
f. Monitored for correct responses from stores

Other Rationale: Because of the formats defined in MIL-STD-1760 for arming demand and monitor it is very difficult to implement arming Management for MIL-STD-1760 stores in any system other than the AIS. This does not necessarily apply for existing stores where arming management will be retained in the SMS (if a separate system).

Conclusion: Implement Arming Management in the AIS.

2.4.6.4 Fuzing Times Computation [7.4.6.4]

AVS Implementation: Only a very limited Arming Time function was implemented in the AVS. Fixed times for Arming Time from Release (50 ms) and Function Time from Impact (5 ms) were transferred to the relevant MIL-STD-1760 store types. This is not totally representative of the function required for all implementations.

Other Rationale: To consider where best to implement this function it is necessary to consider the functions themselves:

- Fuzing time from release
- Function time from impact
- Function time from release
- Function distance

2.4.6.4.1 Fuzing Time from Release This is the minimum time that must expire from release before the fuze and warhead can be detonated by impact or other reason. Note this is not the time when detonation will occur. The need for such a time derives from the danger that weapons, after release, may collide with each other or with the target while within lethal range of the aircraft. The minimum time together with high drag devices on the weapon ensures that the minimum safe distance is reached before any detonation occurs. In older weapons this function was implemented by an air driven gear system but this can be too inflexible for effective target attack and can also place operational limitations on the attack. Note also that too large a time can present problems if the store is not armed before first impact with the target. This is shown in figure 2.4 where the desired firing times are plotted against aircraft velocity and aircraft height. Also shown is the beneficial effect on allowable attack profiles through being able to vary arming time in real time. In fact these diagrams are simplifications and do not allow for the effects of aircraft attitude or store location. The implication is, however, real and the operational effectiveness of the aircraft will be enhanced if the arming time is calculated during

the attack. Since the data for this will be available to the AIS then the AIS is the logical system to implement the function.

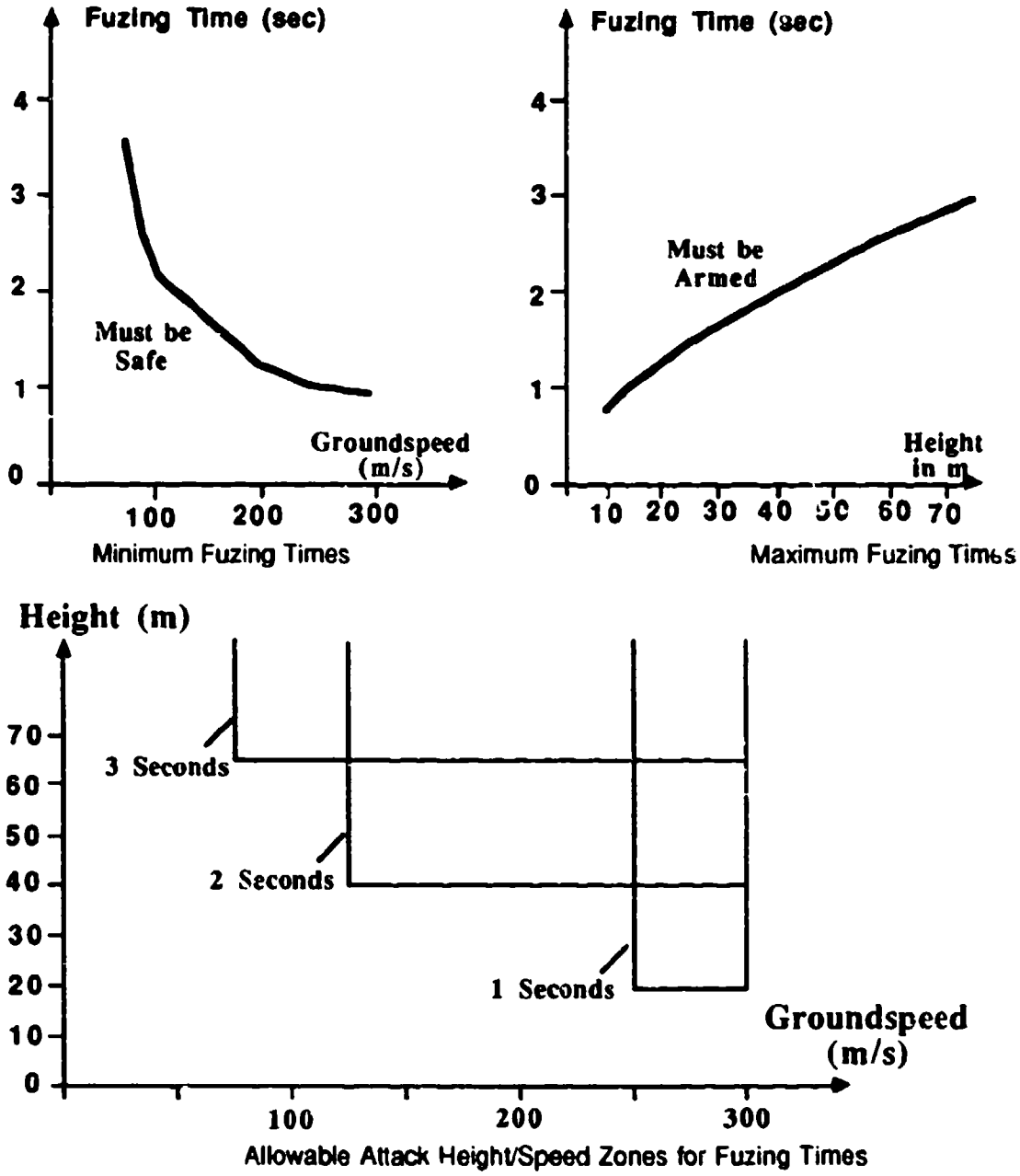

FIGURE 2.4 Fuzing Times

2.4.6.4.2 Function Time from Release This is the time at which the weapon will detonate even if impact with the target has not occurred. This can be for one of several reasons:

a. The weapon contains sensitive data which would be of use to an enemy if retrieved intact.

b. The weapon could be a hazard to friendly forces if not detonated once the target was missed.

c. The weapon is required to detonate at some future time but target impact may not be detectable.

The first two lead to setting fixed times for store types (an AIS function) but the last category requires crew input to set the time.

2.4.6.4.3 Function Time from Impact This is the time after sensed impact or proximity that detonation will occur. This can be for two reasons:

a. Area Denial - as in a mine pattern where each has a different time set. This will obstruct mine clearance for the duration of the times set. This time determination cannot be an AIS function.

b. Target Penetration - by delaying detonation from impact by a short time more effect can be gained by ensuring detonation inside rather than on the target. The delay time needs to be carefully set and is a function of penetration distance, target "hardness," aircraft velocity, attitude and height and weapon type. Similar to arming time from release, this is most effective if re-calculated up to the point of release and is therefore best executed in the AIS.

2.4.6.4.4 Function Distance This is the height or depth at which detonation will occur. This parameter is effectively a target position and cannot be determined by the AIS.

Conclusion: Short arming times should be calculated in the AIS but long time and distances must be determined outside the AIS.

2.4.7 Store Release [7.4.7]

Much of the rationale for this issue is related to the AIS/SMS issue. Rationale for this is contained referenced to paragraph [7.3.1] above, although some points are repeated here.

2.4.7.1 Release Prompt [7.4.7.1]

AVS Implementation: In the AVS the Release Prompt is by operator action, for example operation of a Trigger switch, and is therefore not an AIS function.

Other Rationale: Consent to initiate release is a critical function and therefore not able to be defined by information available to an AIS. A situation where releases are not prompted by air crew is one where chaff, flares or missiles are automatically launched in response to detected threats. This situation requires prior consent to release by the air crew and furthermore the AIS is unlikely to have sufficient data to determine release requirements and would therefore require data from the Defensive Aids Systems.

Conclusion: Not an AIS function.

2.4.7.2 Suspension Equipment Management [7.4.7.2]

AVS Implementation: The AVS implements Suspension Equipment Management for MAU-12 racks and Modular Rail Launchers mounted on MAU-12 racks. Functions implemented include Arming, Release and Monitoring. The implementation of these functions is closely coupled with the

MIL-STD-1760 message generation and significant increases in processing and data bus loading would have occurred had the functions been separated.

Conclusion: Suspension Equipment management should be implemented by the AIS.

Other Rationale: As for [7.3.1] above

2.4.7.3 Weapon Bay Management [7.4.7.3]

AVS Implementation: The AVS did not implement Weapon Bay Management. The AVS is representative of a system applied to an F-16 or F-18 type aircraft. Sufficient discrete signals are provided at each station to implement Weapon Bay Management by software change.

2.4.7.4 Separation Management [7.4.7.4]

AVS Implementation: The AVS implements full Release Management including correct use and response to AEIS signals through the release of stores. AEIS functions implemented include:

- Analog Network	Reconfigured for revised store loadout
- MIL-STD-1533	"No responses" ignored once separation occurs. All critical data generated and states verified.
- Discrete	Release Consent energized and de-energized at correct points and Interlock monitored to verify store separation
- Power	Correct power provided during release and then "dead faced" after release

Other, Non AEIS, functions implemented include: coordinate system generation for AMRAAM and provide coordinate data to the fire control computer for post release calculations; update of display information during release; and monitoring for hang ups.

Other Rationale: During release many functions have to be executed in a short time frame. Some of these are unique to aircraft and some unique to stores. To minimize delays, data paths should be kept short and therefore Release Management should be concentrated nearest to the most relevant database. This is likely to be in the AIS.

2.4.7.5 Separation Timing [7.4.7.5]

AVS Implementation: The AVS implements a very simple form of Separation Timing. Release spacing demands in meters are divided by the known ground track velocity to give Release Timing in milliseconds.

Other Rationale: Accurate release timing is most critical to "dumb" unguided bombs. Since they have no terminal guidance, the weapon trajectory and impact point depend solely on the dynamics and timing of the air vehicle when store separation occurs. See figures 2.5 and 2.6. The relative importance of accurate release timing has been perceived as reduced in recent years due to the increased use of LASER or TV guided Bombs and the trend towards stand off weapons characterized by the projected Modular Stand Off Weapon (MSOW, formerly LRSOM). Two factors that will balance against this are:

a. The relative vulnerability of aircraft involved in LASER or TV guided bomb release compared to "blind" release of dumb bombs at high velocity and low altitude with release point determined by use of precision INS, TERCOM or GPS mechanisms.

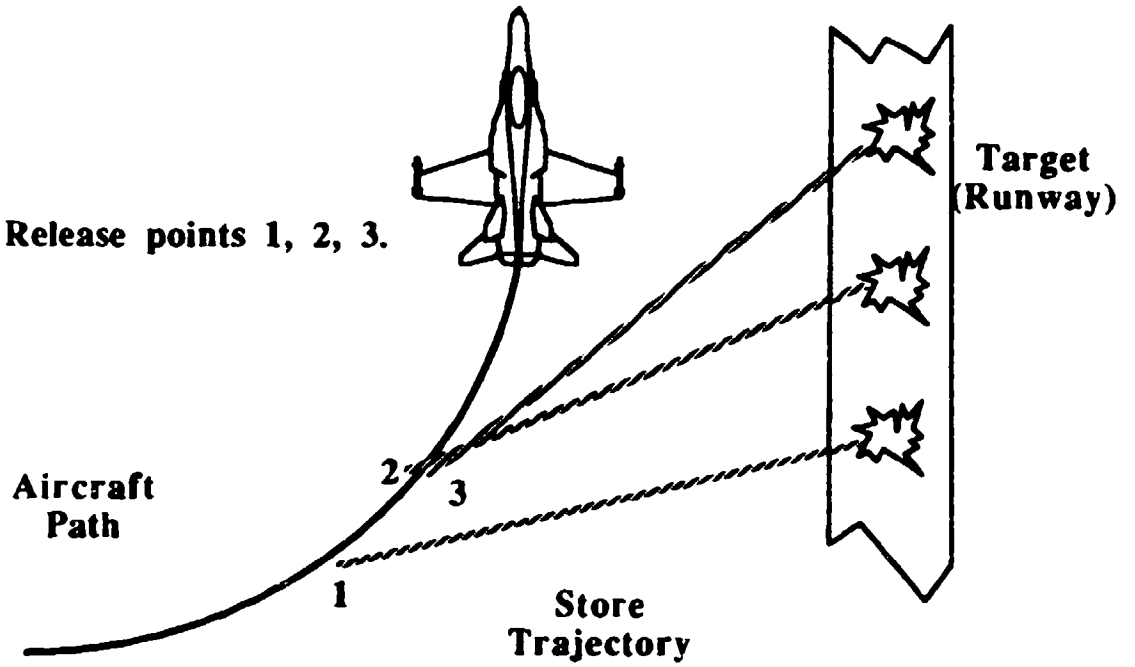

FIGURE 2.5 Release Points and Impact Points

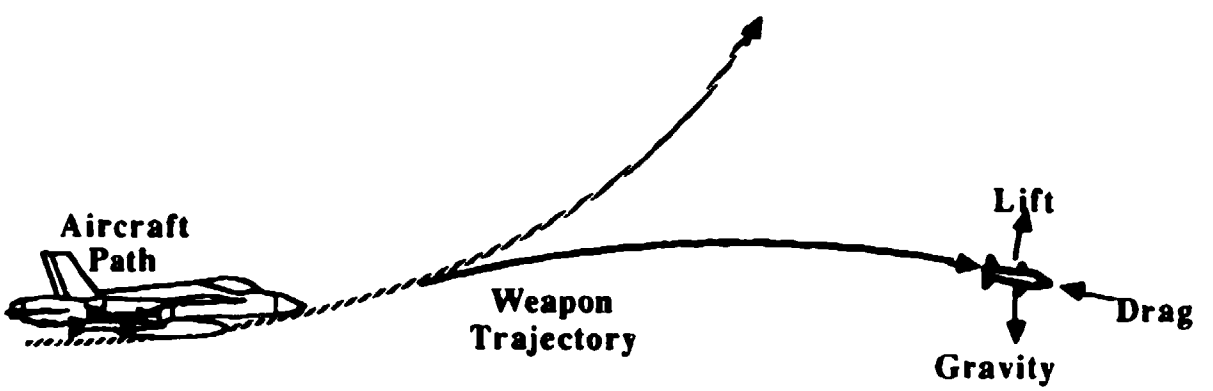

FIGURE 2.6 Weapon Dynamics

b. The high cost of protracted combat will lead to dumb weapons being used as follow up to targets softened by use of "stand off" weapons.

In implementing the release timing function there are five key inputs:

a. The target position and velocity which is provided by an aircraft sensor, crew, briefing system, or JTIDS.

b. The aircraft dynamics (velocity, position, altitude) available from the aircraft navigation system.

c. The aircraft air dynamics (air velocities, angle of attack etc) which is available from the air data computer.

d. The weapon ballistics data (mass, drag, lift etc.).

e. The weapon station characteristics (store downforce, local airflow effects, angle of S&RE etc.).

There are also two key outputs:

a. Release timing to SMS function (possibly collocated with AIS).

b. Aircraft trajectory (steering commands to the HUD or the flight control system to ensure the aircraft is capable of releasing stores to hit the target).

Traditionally this function has been implemented in the Fire Control Computer or Mission Computer and inaccuracies have resulted due to weapon station unique characteristics not being considered. From a data path viewpoint and considering the above inputs and outputs the AIS is the best location for the function.

Conclusion: Implement Separation Timing determination in the AIS.

2.4.7.6 Impact Point Determination [7.4.7.6]

AVS Implementation: In the AVS the impact points are received as avionic data (target positions) or crew inputs (bomb drop points). Impact point determination is therefore not implemented as an AIS function.

Other Rationale: Impact points are target positions and cannot be readily determined by the AIS.

Conclusion: Not an AIS function.

2.4.7.7 Separation Sequence Determination [7.4.7.7]

AVS Implementation: The AVS in implementing an SMS function also implemented the Release Sequence Determination function. An algorithm for selecting the "next" release was defined giving regard to:

a. Available stores of the correct type
b. Aircraft balance considerations (see [7.4.7.9])
c. Preference to release outer stores
d. Preference to stores on the Port side

The most difficult part of implementing this function is during fast releases of "dumb" bombs where the next release cannot be determined until the success or hung state of the previous release can be verified. Thus, care had to be taken to ensure the algorithm did not take too long and ensure the algorithm was executed inside the timing loop.

Other Rationale: Release sequences can be extremely complex due to the highly complex aerodynamic interactions between captive and released stores. This leads frequently to individual sequences being defined for aircraft types, weapon types and even specific loadouts. Such definitions of function are clearly related to the SMS function.

Conclusion: Only an AIS function if implemented with the SMS.

2.4.7.8 Hang Up Detection [7.4.7.8]

AVS Implementation: In the AVS stores can be declared "hung," that is unusable but retained for a number of reasons including:

a. Failure of MIL-STD-1760 communication.

b. Failure to achieve demanded MIL-STD-1760 critical states.

c. Mismatch of inventory data or power up inventory determination.

d. Detected failure of store to separate when release or jettison demanded (detected by total failure of MIL-STD-1760 interlock and MAU-12 WRIS inputs to change within predetermined time).

This function required a fusion of MIL-STD-1760 data (Interlock, MIL-STD-1553) and SMS data (MAU-12 WRIS) and a combination of sub-functions. To have implemented these as a separate AIS and SMS function would have increased processing loads and degraded performance.

Other Rationale: The AVS implementation is typical of that required in other implementations. If a store is either too readily or too slowly declared hung, operational performance can be inhibited. To separate the function into separate AIS and SMS systems would tend to degrade the determination accuracy either, because of less data being analyzed, or slower determination.

2.4.7.9 Balance Management [7.4.7.9]

AVS Implementation: The AVS implemented a balance management function in determining release sequences. Each potential release was checked for the balance impacts of successful release, and if balance limits would be exceeded then an alternative store was selected. The balance limits set were a maximum lateral imbalance of one store.

Other Rationale: The AVS balance algorithm is typical of many current implementations but several factors lead to reconsideration for future aircraft:

a. The increased use and delegated authority to active flight stability designs reduce the potential burden on aircrew caused by short term aircraft imbalance.

b. The trend to reduced observability places additional constraints on weight imbalance and stability augmentation.

c. The potentially reduced use of under-wing pylons for store mounting increases the longitudinal distribution of heavy stores in internal bays and may necessitate a longitudinal balance constraint on potential releases.

d. The weight of a single store can typically vary between 100 and 1500 kg (200 - 3000 pounds). Individual store weights may have to be considered in determining whether a potential release was safe. Store weight can potentially be determined via the MIL-STD-1760 interface.

While the balance function is inherently an SMS function factors b. and d. above, taken with the previous observations on hang up detection lead to a close link with the AIS being required.

Conclusion: Implement in the AIS if also implementing the SMS function.

2.4.7.10 Engine Control Assistance [7.4.7.10]

AVS Implementation: No engine control assistance function was implemented by the AVS.

Other Rationale: Engine assistance will depend on three key inputs: the engine static and dynamic conditions, the weapon release characteristic, and the location of the weapon. The outputs of the function will be data to the engine management system and/or to the weapon (via the MIL-STD-1760 interface). The function is more related to the SMS function than the AIS and it is therefore best implemented in the AIS only if a separate SMS is not fitted.

2.4.8 Store Jettison [7.4.8]

2.4.8.1 Jettison Prompt [7.4.8]

As with the Release and Arming prompts (see 2.4.6 and 2.4.7) this is not an AIS function.

2.4.8.2 Selective Jettison Management [7.4.8.2]

AVS Implementation: The AVS implemented the following Selective Jettison functions:

a. Management of Suspension Equipment
b. Retention of Selective Jettison package
c. Interlock of Selective Jettison with received discrete and avionics bus data
d. Stores set to safe state
e. Sequenced jettison of selected stores on demand

Of these sub functions only the setting of stores to a safe state necessitated close links with the MIL-STD-1760 interface. The conclusion is that the Selective Jettison Management function, as implemented by the AVS, was an SMS function and should not be located in the AIS unless also implementing the SMS function.

Other Rationale: Close links with the AIS function will be required where secure data (such as target locations, threat libraries or guidance link characteristics) have been programmed into the store. In such circumstances either the store would not be jettisoned, or classified data erasing may be commanded via the MIL-STD-1760 interface.

Conclusion: Not an AIS function unless also implementing the SMS.

2.4.8.3 Emergency Jettison Management [7.4.8.3]

AVS Implementation: In the AVS, Emergency Jettison differs only from Selective Jettison in the following areas:

a. A different input prompts the activity.

b. All stores are jettisoned.

c. A secondary mechanism is involved after the sequenced jettison that ensures all stores are jettisoned.

None of these differences is related to MIL-STD-1760 implementation and therefore the conclusion obtained above for Selective Jettison is still valid.

Conclusion: Not an AIS function unless also implementing the SMS.

2.4.8.4 Store Safe Verification [7.4.8.4]

AVS Implementation: In the AVS, Stores were set safe before jettison by two mechanisms:

a. Setting all MIL-STD-1760 stores safe by data bus demands and by setting Release Consent inactive

b. Setting all Nose Fuzing, Tail Fuzing and Master Arm signals to the S & RE to inactive states

This cannot be considered as true verification because stores that failed to achieve a safe state or which could not be monitored for safe status were still jettisoned. The verification mechanism of using two "independent" inputs (data bus and Release Consent) to the store to demand safe state has weaknesses in that in the contracted issue of MIL-STD-1760 Release Consent is not a guaranteed interlock on Arming. For the AVS all store definitions do have Release Consent as such an interlock and MIL-STD-1760 Notice 3 also forces such an interlock. Problems were also encountered due to the management of a carriage store. During jettison this required Release Consent to be active at the ASI to jettison the carried stores. All other stores required Release Consent de-energized at the ASI. Because of the high use of MIL-STD-1760 in implementing this function and the commonality in signal types between Release Consent and existing store fuzing/arming signals, this function is best implemented in the AIS.

Conclusion: implement in the AIS.

2.4.9 Inventory [7.4.9]

2.4.9.1 Inventory Determination [7.4.9.1]

AVS Implementation: The AVS implemented a fully automatic mechanism for determining the store loadout. Each station was interrogated for the following data:

- MAU-12 indicating weapon or launcher loaded
- MIL-STD-1553 response when power applied
- AIM-9L ident discrete (28 Volt)
- MIL-STD-1760 interlock status
- MIL-STD-1760 store identification data

From these inputs the AVS can unambiguously determine the exact loadout at every station with no further crew or aircraft input needed. The AVS implementation can however be criticized from several viewpoints:

a. The AVS existing store inventory is extremely limited and ambiguity would result if more existing stores were added as many would respond identically to the above data list.

b. MIL-STD-1760 stores and AMRAAM (only electrically compatible with MIL-STD-1760) were differentiated in the AVS only by use of two unique characteristics. First, all the MIL-STD-1760 mission stores in the AVS inventory have MIL-STD-1553 interfaces powered by 28 Volts. Secondly AMRAAM has a MIL-STD-1553 interface powered from 115 Volts. These enabled a test of MIL-STD-1533 response with 28 Volts applied and no 115 Volts to determine the store as MIL-STD-1760 and not AMRAAM. This test obviously cannot work with a wider inventory of MIL-STD-1760 stores some of which might have remote terminals powered by 115 Volts.

c. The location determination of MIL-STD-1760 stores in the AVS is dependent on MIL-STD-1553 remote terminal addresses. This could lead to misinterpreted inventory under any of the following conditions.

(1) Store responding to more than one MIL-STD-1553 address.

(2) Failure of MIL-STD-1760 address discretes (a parity check is implemented but continuity failures are most probable following new store connection).

(3) Failure of MIL-STD-1760 data bus controller to set addresses correctly.

In conclusion it would be inadvisable to use the AVS inventory mechanism to solely determine inventory.

Other Rationale: The AVS discussion above has highlighted the problems of implementing an automatic inventory determination mechanism. These problems are centered on existing stores (including AMRAAM) which provide insufficient data to be uniquely identified.

Conclusion: Inventory cannot be determined via the AIS and therefore must be a crew or aircraft function.

2.4.9.2 Inventory Confirmation [7.4.9.2]

AVS Implementation: No mechanism for inventory confirmation is implemented in the AVS. The presumption is that the crew will compare the displayed store loadout with written data (from briefing). This is not a system to be recommended for future aircraft because of the danger of misinformation and the increased crew workload. The Inventory Determination implemented could be considered as a confirmation function.

Other Rationale: If it is assumed that the AIS is not used as the inventory determination system then a separate inventory panel or mission briefing tape or even direct crew input will provide the basic inventory data. This data should be considered critical for these reasons:

a. If inventory is not correctly known the aircraft may be placed into an unsafe dynamic position due to balance or other effects.

b. If inventory is not correctly known the aircrew may be misinformed as to the feasibility of various mission roles.

It is therefore advisable to implement an inventory confirmation function in the aircraft. The AVS type inventory determination function described in [7.4.9.1] above is suitable for this function. Such a mechanism has the following input data:

a. MIL-STD-1760 interlock, MIL-STD-1553 response and Store Description data available to the AIS.

b. Suspension and Release Equipment monitor switches and existing store continuity discrete data available to the SMS.

Clearly a combined AIS and SMS is the best approach with the AIS (if separate) implementing the inventory confirmation function for MIL-STD-1760 stores.

Conclusion: Implement inventory confirmation in the AIS.

2.4.9.3 Inventory Update [7.4.9.3]

AVS Implementation: Inventory update was implemented fully in the AVS. MIL-STD-1760, MAU-12, and Modular Rail Launcher (MRL) data was interrogated and changes to inventory determined in cases of: store failure, store release, and store jettison. The function is representative of that required in a future system.

Conclusion: Implement Inventory Update in the AIS unless a separate SMS is implemented.

2.4.10 Crew Interface [7.4.10]

2.4.10.1 Displays [7.4.10.1]

AVS Implementation: The AVS implemented a multifunction display system to enable operator monitoring of the AVS and stores. The display used was dedicated to the AVS although data access to all avionics data was available via a MIL-STD-1553 remote terminal to the Avionics Bus. The AVS implementation cannot be considered to be fully representative of a future implementation for two reasons:

a. Display Systems are required to be more flexible and interface/display data from multiple systems to provide for failure tolerance and reduced cockpit sizes.

b. Most future aircraft avionics architectures avoid interfacing the display system to an avionics MIL-STD-1553 data bus because of bus loading problems (the AVS display system uses approximately 6% of available bus time). Instead a display system bus is implemented in MIL-STD-1553 or High Speed Data Bus.

The AVS Implementation should be seen as implementing both an AIS and a display system.

Other Rationale: Aircraft display systems typically execute very high speed low level processing of preprocessed data into visible displays. The external preprocessing of the data usually produces high level store data such as status, location and modes. This data is abstract from most MIL-STD-1760 data forms and is therefore considered to have been preprocessed by the AIS (or SMS) system.

Conclusion: Displays are not an AIS function.

2.4.10.2 Critical Controls [7.4.10.2]

AVS Implementation: The AVS Implemented the following critical controls as switches directly connected to the PCE:

- Trigger
- Emergency Jettison
- Selective Jettison
- Master Arm

Another input sometimes considered critical was the AIR or GROUND status. This was implemented as avionics bus data.

The above controls were seen as critical to the provision of MIL-STD-1760 critical control data where the requirement of 1 in 10^5 hours inadvertent error rate was a prime design driver. To achieve this design requirement special care was taken in processing the data from these inputs. Provisions included:

a. Switches were a minimum of two poles. Each switch pole having normally open and closed contacts to provide a minimum of four data inputs to the AVS.

b. Separate data paths were implemented for the separate switch poles. These paths were separately processed with the output data being reformed at the PCE MIL-STD-1760 data bus controller. One path produced the critical control data and one path the critical authority codes.

The AVS implementation is representative of the design techniques that would be required in a future implementation. The number of critical switches could be expected to be higher however as multiple crew and multiple release demands for air to air and air to ground roles may be implemented.

Other Rationale: The critical inputs described for the AVS are also typical inputs for the aircraft SMS function. Figure 2.7 shows four possible implementations for the SMS and AIS functions without requiring separate sets of critical switches in the cockpit (considered unacceptable due to crew workload). In figure 2.7a, the AIS provides part processed critical input data to the SMS function. This has the disadvantage that the SMS safety analyses and derived performance is degraded by the AIS safety performance before any SMS circuitry and software is analyzed. In figure 2.7b, the AIS receives from the SMS part processed critical input data. This similarly has the disadvantage that the SMS safety performance degrades the AIS safety performance. In figure 2.7c, a combined AIS/SMS receives the raw critical input data. Because the combined system can implement common sub-functions there is significantly less safety degradation. Additionally, the safety design is controlled by one design authority, thereby reducing hazards due to ambiguities and unnecessary overdesign. In figure 2.7d, the critical inputs are parallel input into separate AIS and SMS systems. This results in no safety degradation but a degree of unnecessary design and build duplication. Both 2.7c and 2.7d represent good implementations. In both cases the critical controls can be considered to be in the AIS for MIL-STD-1760 stores.

Conclusion: Implement critical controls as part of the AIS.

2.4.10.3 Non Critical Controls [7.4.10.3]

AVS Implementation: The AVS implemented all non critical controls as part of the display system (see [7.4.10.1]). Typical controls provided were:

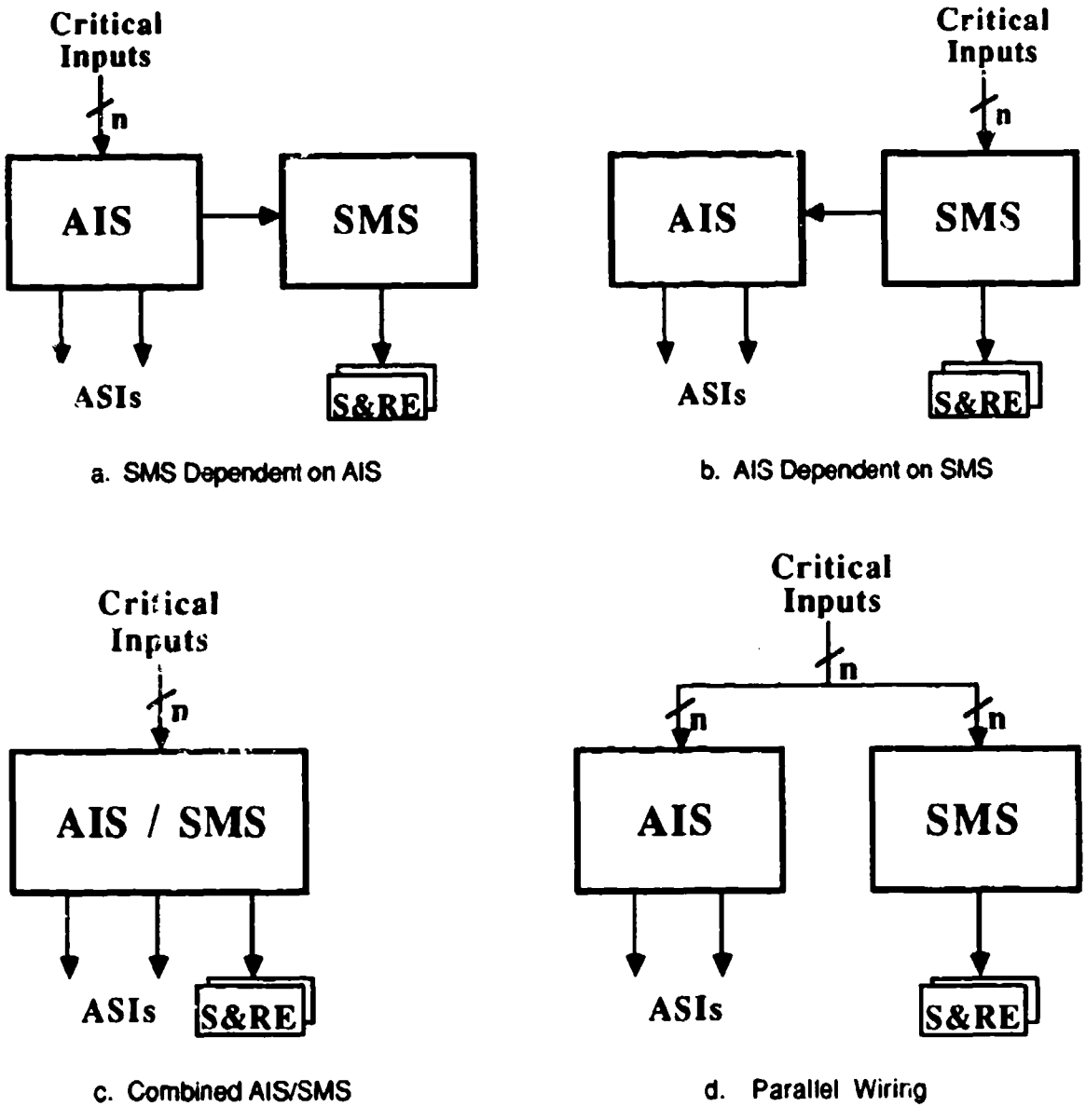

FIGURE 2.7 Critical Switch Implementation

- Store type selection
- BIT demands
- Targeting mode selection
- Release Package selection

These data inputs are of a higher level form than those of MIL-STD-1760 and therefore require processing in the AIS. As such, the non critical controls of the AVS can be considered similarly to the displays as being an additional function separate from the AIS function.

Other Rationale: Effectively as for [7.4.10.1]

Conclusion: Non critical controls are not an AIS function.

2.4.11 Nuclear Control [7.4.11]

AVS Implementation: The AVS implements no nuclear weapons in its inventory. System level expansion provision was originally made to add on nuclear weapons. Such additions would require the following changes:

a. Addition of Special Weapon control panels to enable two crew input of NRC, NAC and PAL data. These panels would interface to MIL-STD-1553 avionics bus and via discrete signals to other equipment.

b. Addition of special discrete signals to the AVS armaments bus. These would convey NRC data to the SSE at the Nuclear Weapon stations.

c. Replacement of SSE at Nuclear Weapon stations with nuclear certified SSE. These would be essentially to the same design as the current SSE but would implement additional independent circuitry to drive the MAU-12 In Flight Operable Lock (IFOL) by command from the Armament Bus interlocked with added discretes as described in b. above.

d. Addition of Aircraft Monitor and Control (AMAC) System 1 controller interfacing to the Armaments Bus and the extra Special Weapon panels. PAL data would be transferred from the Special Weapon panels via the PCE and the MIL-STD-1533 Armaments Bus.

e. Addition of Nuclear Weapon Control software to the PCE software. This would require modification to all processing parts of the PCE including the critical code generation. All of the PCE software would require nuclear certification.

Other Rationale: Consideration of various areas of Nuclear Weapon Control for inclusion in the AIS can be by analysis with conclusions reached for conventional stores. Very few aspects of nuclear weapon control are different in function from conventional weapons. The implementation differences arise from three areas:

a. The certainty levels required are typically between 10^6 and 10^7 higher than with conventional stores.

b. Specific design requirements are detailed in Air Force and Navy documents.

c. The involvement of various other agencies (for example the Department of Energy and Sandia Labs) is mandated at various stages in the design process.

Conclusion: Nuclear weapon functions should be implemented in the AIS if the equivalent conventional weapon function is.

2.5 Future Growth Potential [7.5]

RATIONALE: The rationale was provided in the Appendix A guidance and no further rationale is necessary.

3. RATIONALE FOR APPENDIX A SECTION 8

Paragraphs 3.1 through 3.4 of this section provide rationale derived from the AVS and other sources to support the guidance given in paragraphs 8.1 through 8.4 of Appendix A. Issue statements and subject titles have been summarized. Where rationale was supplied in the guidance text and further provision is considered superfluous, then extra rationale is not supplied.

3.1 Approach [8.1]

RATIONALE: The rationale was provided in the Appendix A guidance and no further rationale is necessary.

3.2 AIS Functional Performance [8.2]

3.2.1 Store Interface Performance [8.2.1]

3.2.1.1 MIL-STD-1760 ASI [8.2.1.1]

3.2.1.1.1 Number [8.2.1.1.1]

RATIONALE: The rationale was provided in the Appendix A guidance and no further rationale is necessary.

3.2.1.1.2 Categories [8.2.1.1.2]

ISSUE: What category of ASI should be implemented.

AVS Implementation: The AVS implemented 2 class I ASIs, 3 class IA ASIs, and 2 class II CSSIs. All mission stores managed by the AVS can be supported by a class II ASI or CSSI. No class I or auxiliary services are needed.

Implementation Survey: Refer to section 7.3 of the application guidelines report for detail background. No hard requirement for high bandwidth lines has been found and the requirement for auxiliary power is very limited. No store requirement for the 270V DC or Fiber Optic interfaces is yet evident.

Other Rationale: The requirement for four high bandwidth lines is only substantially supported by stores such as the LANTIRN pod. It is likely that such stores will continue to be developed on an aircraft target specific basis and these aircraft can provide the necessary additional interfaces. The implementation difficulty for high bandwidth signals is directly proportional to the number of interface signals implemented. Auxiliary power has few applications other than for multiple carriage stores. No full MIL-STD-1760 carriage stores are known to be currently planned because of the necessary electronic complexity of a MIL-STD-1553 remote terminal and bus controller, the availability of an alternative solution (where multiple stores are carried on a carriage store, but are electrically linked to separate ASIs on the aircraft structure) and the reduced use of carriage stores. The "provisions" interfaces for Fiber Optic and 270 Volt signals are not currently required. Indeed there must be some considerable doubt whether they will be used in the medium term. Store designers would currently have to design for compatibility with interfaces that do not have these capabilities and for the stores to also use Fiber Optic or 270V DC signals. This would place an unacceptable burden on store design. The resolution of this problem could be by the government mandating Fiber Optic and 270V DC aircraft implementation

(difficult given the projected costs), or a store requiring these interfaces to achieve required performance (no such projected stores known), or else the signals will not be used.

3.2.1.1.3 Aircraft Capacity [8.2.1.1.3]

ISSUE: How many ASI should be available for simultaneous use?

AVS Implementation: The AVS provided for:

a. All ASIs to be simultaneously connectable

b. All ASIs to be simultaneously fully powered. It should be noted that the AVS only implemented five ASIs and the necessary power wiring to support this performance was a considerable stress on the design.

c. Two ASIs at a time to be actively controlled. This included full targeting of connected stores.

Other Rationale: The AIS processing and data bus loading will tend to be directly proportional to the number of stores being actively targeted. Should this number be limited to less than two then the aircraft will be severely limited in operational performance. Two ASI targeting provides for:

a. A target to be tracked and attacked even if either it is obscured to one store by aircraft structure or one store fails during the release phase

b. Two targets to be attacked at a time. In practice this number is increased by the number of targets already attacked by stores in free flight and targets yet to have stores launched to attack but have already been programmed/acquired for attack.

Allowing for four ASIs to be fully powered will provide a potential power load of 16 KW by the AIS and connected stores and require input cabling capable of carrying 50 Amps. To increase the number fully powered will proportionally increase this design stress. To reduce the number fully powered below four will limit operational performance. Many stores require several seconds to become operational after power up and therefore when attacking multiple targets it is necessary to 'pre-warm' some stores other than those being targeted. Setting a minimum of four provides for two stores always to be available following release of the minimum of two being targeted.

3.2.1.2 MSI [8.2.1.2]

RATIONALE: The rationale was provided in the Appendix A guidance and no further rationale is necessary.

3.2.1.3 Non AEIS Signals [8.2.1.3]

ISSUE: How should these be specified?

AVS Implementation: The AVS implemented two AIM-9L and six MK-82 bomb stations. Only one station at a time could be actively targeted or released although "tracking" guidance for two missiles and pairs release (through staggered release of two bombs) was implemented. To increase this AVS performance would proportionally increase the relevant AVS complexity.

RATIONALE: The rationale was provided in the Appendix A guidance and no further rationale is necessary.

3.2.1.4 Suspension and Post Launch Interfaces [8.2.1.4, 8.2.1.5]

RATIONALE: The rationale was provided in the Appendix A guidance and no further rationale is necessary.

3.2.2 Store State [8.2.2]

3.2.2.1 State Change Prompt [8.2.2.1]

ISSUE: How to specify the relevant performance?

AVS Implementation: The AVS changed the state of stores on detection of the following events; crew input, store failure, and store release. No problems were found with this implementation.

RATIONALE: The rationale was provided in the Appendix A guidance and no further rationale is necessary.

3.2.2.2 State Command [8.2.2.2]

ISSUE: AIS performance for Store State Commands.

AVS Implementation: The AVS implementation is essentially identical to that given in Appendix A. Differences relate principally to updates for the change between the contracted and the current issues of MIL-STD-1760. The AVS design was not made significantly more complex by the requirement to meet this performance once the design impact of implementing both the SMS function and the MIL-STD-1760 bus controller safety requirement is disregarded.

Other Rationale:

a. Inputs - No further rationale is required.

b. Outputs - These are the only state command outputs specified in MIL-STD-1760. The formats are as defined in MIL-STD-1760. No definite inhibit or enable condition for Release Consent can be specified for jettison because some stores may require it to be enabled and some may require it to be inhibited (to disable fuzing/arming).

c. Discrepancy - The key dependencies specified are on the critical switch inputs. The dependency provides for the following uses of the switches listed below. A clear interpretation of critical switches is essential for the retention of safety.

(1) Master Arm - Reduction of safety and increase of readiness for further critical inputs

(2) Trigger - Initiation of launch and fire processes for air-to-air stores

(3) Weapon Release - Initiation of launch and release processes for air to ground stores

(4) Selective Jettison - as selective jettison but for the emergency jettison functions

d. Timing - Timing specification is directly related to total weapon system performance and therefore only minimum performance is detailed. Specifying 80 ms for safety critical change state sets a limit for the uncertainty of the store state and the delay times to be compensated for in computing launch points. To specify a shorter time would require a high degree of interrupt driven processing and bus control flexibility in every application. The specification of 10 seconds for other state changes provides an absolute minimum performance that must be available in every AIS. This only ensures that state changes will occur in real time. The required performance will always be highly dependent on state type, store type and mission. For example to track moving targets move changes with maximum 50 ms delay are often required.

e. Assurance - The success per ASI of 10^{-4} failure after one hour is equivalent to the performance of [8.3.2.2] for a ten ASI mission. The same applies for the safety cases of 10^{-8} for Jettison and Master Arm/Weapon Release relative to [8.3.2.3].

The specification of 10^{-5} after one hour for error if either Master Arm or Weapon Release is incorrectly interpreted demanded, is derived from MIL-STD-1760 Notice 3 table B-XXXII Note 4 for a ten ASI mission. The other cases performance of 10^{-4} relate mainly to mission success and the avoidance of not selecting an ineffective mission store state.

3.2.2.3 State Monitor [8.2.2.3]

ISSUE: AIS Performance

AVS Implementation: The AVS performance differs from that specified, in three areas:

a. The basic timing figure of 100 mS was modified according to the type of state change demanded but was always before 50 ms had elapsed. This provided a stress to the design as it increased the processing and bus load peaks associated with state changes.

b. A time out of 500 ms was imposed for state achievement. Such a timeout would not work with many projected MIL-STD-1760 stores where state achievement may take minutes.

c. No regular polling of 0.5 Hz was established.

Other Rationale: It is vital to safety that a store is closely monitored to ensure it does not attain a dangerous state. Once a store has been detected as potentially attaining a dangerous state several actions can be taken to correct the safety hazard. These include:

- Data Bus commands
- Removal of store power
- Release Consent set to disable
- Jettison of store

The highest probability of attaining incorrect states arise when a state change is being accomplished and therefore a maximum uncertainty time of 100 ms is specified for those times. During normal stable operation the uncertainty time is calculated at 2 seconds from consideration of:

a. The low probability of state corruption
b. The highly critical nature of some states
c. The data bus load imposed (approximately 0.05% per store)

3.2.2.4 Power Supply Management [8.2.2.4]

ISSUE: AIS Performance

AVS Implementation: This is as stated in Appendix A. No problems were caused in the implementation of these requirements.

Other Rationale:

a. If power is not present when it is required then store state failures will occur

b. Power should be applied frugally because of the limited power available in aircraft and the useful life degradation of powered stores. Special care is required with 28V DC Power 2 and Auxiliary 28 Volts as many stores can be guaranteed to be safe when these supplies are not powered.

c. Four ASIs must be able to be powered (from [8.2.1.1.3])

3.2.3 Data to Store [8.2.3]

3.2.3.1 Data Source [8.2.3.1]

RATIONALE: The rationale was provided in the Appendix A guidance and no further rationale is necessary.

3.2.3.2 Aircraft Data [8.2.3.2]

3.2.3.2.1 Formats [8.2.3.2.1]

ISSUE: What formats?

AVS Implementation: The AVS received all aircraft data in MIL-STD-1760 data formats. This simplified and improved the performance achieved in data transfer to stores.

Other Rationale: The use of MIL-STD-1760 data entity definitions and formats in all avionic systems would simplify and improve systems. This is not likely to be easily achieved because of a number of factors:

a. Standardization of equipment types such as INS and Air Data may not be compatible with the MIL-STD-1760 formats.

b. MIL-HDBK-1553 does not always conform to MIL-STD-1760 formats.

c. Retrofits of MIL-STD-1760 to current aircraft will have to be compatible with the existing data formats in use.

3.2.3.2.2 Data Availability

ISSUE: Which data types should be available?

AVS Implementation: The AVS implemented a very general form of aircraft data interface. Most MIL-STD-1760 data entities derived from aircraft sources were implemented and given unique subaddress/word positions. Notable limitations were the limited number of simultaneous targets

and the exclusion of aircraft-store alignment data (required when stores are moved inside weapon bays or on swing-wings). Most of this data was unused by the AVS stores.

Other Rationale: The majority of data between aircraft and stores (via the AIS) is centered on two types - where the aircraft is and where the targets are. Specific interface provision should therefore concentrate on these data types. Significant expansion provision should also be provided for the unique to store or mission data types that may be required to be added to the AIS during subsequent updates of store loadout capability. See also 3.4.2 [8.4.2] for more detail on interface requirements.

3.2.3.2.3 Data Accuracies

ISSUE: What accuracy?

AVS Implementation: No accuracy performance was specified.

Other Rationale: It is common to specify data accuracy for systems on a store by store basis. This policy, if extended to the AIS, could lead to difficulties if a new store requires a much higher accuracy than possible with an AIS implemented with only a limited performance. A generic baseline performance must therefore be specified. Such a baseline performance is stated in Appendix A based on:

a. Cumulative Error Probability (CEP) of $\pm$ 10 meters
b. Maximum target angle inaccuracy of $\pm$ 0.5 degrees (0.28 semicircles)
c. Moving aircraft and targets to Mach 1 velocity
d. Partitioning of this 'budget' as 33% inaccuracy, 67% other factors
e. Partitioning of that 'budget' as 50% AIS, 50% aircraft

3.2.3.2.4 Data Latency and Update Rates

ISSUE: AIS Performance?

Background: MIL-STD-1760 specifies MIL-STD-1553 as the prime data interface between the aircraft and store. As this is a time shared communication system there is no continuous data connection between aircraft and store and therefore data delays are inherent in the implementation of the AIS. Data delays, whether due to latency or update cycles, can be as detrimental to system performance as data inaccuracies. The AIS should therefore have latency and update rate characteristics specified for the most affected data entities. MIL-STD-1760 (as defined by June '85 Notice 1) specifies four categories of data:

- Control/monitor data entities
- Target data entities
- Aircraft data entities
- Trajectory data entities

Only the target and aircraft data entities are seriously impacted by data delays. Indeed they are the only entities with change rate entities also specified for the correction of errors. Therefore these should be analyzed as the indicators for performance requirements, because target data is more sensitive to delays. This will be considered first.

3.2.3.2.4.1 Target Data Latency and Update Rates (to stores)

AVS Implementation: Performance for the AVS was specified for update rates but not for data latency. A 25Hz update rate was specified for an existing store (AIM-9L Sidewinder) and that figure also specified for two projected MIL-STD-1760 weapons of comparable ability to AIM-9L

and Maverick. The update rate was selected to provide for acquisition of a Mach 2 target at 10Km (6 miles) range with the following assumptions:

a. Maximum average error for target lock = 1/2°
b. 10% of error budget allowed for update rate
c. Target crossing aircraft axis at right angles (worst case)

This requirement caused few problems. Even with two targets being tracked, target updating to stores contributed less that 5% of maximum theoretical armament bus loading. The following text provides rationale for:

- Target data
- Implementation difficulty
- Aircraft data
- Analog data

Data Latency was not specifically specified but aggressive goals were set in the AVS design in order to evaluate the difficulties in achieving low data latencies. Latencies of between 8 ms and 64 ms (average 43.1 ms) were measured for transfer of data to stores.

Other Rationale: Performance specification for data latency and update rates should be considered from two viewpoints: desired performance and the impact on design of that performance. As will be explained below, achievement of mandatory operational requirements is partitioned between many systems (store, aircraft) other than the AIS and it is the AIS proportion of the required total performance that must be determined. To consider desired performance it is useful to analyze a particular case. A close in interception of an agile air to air target has been chosen here for detail consideration as a stressing case. Referring to figure 3.1, a target is shown with both relative velocity and acceleration to the host aircraft.

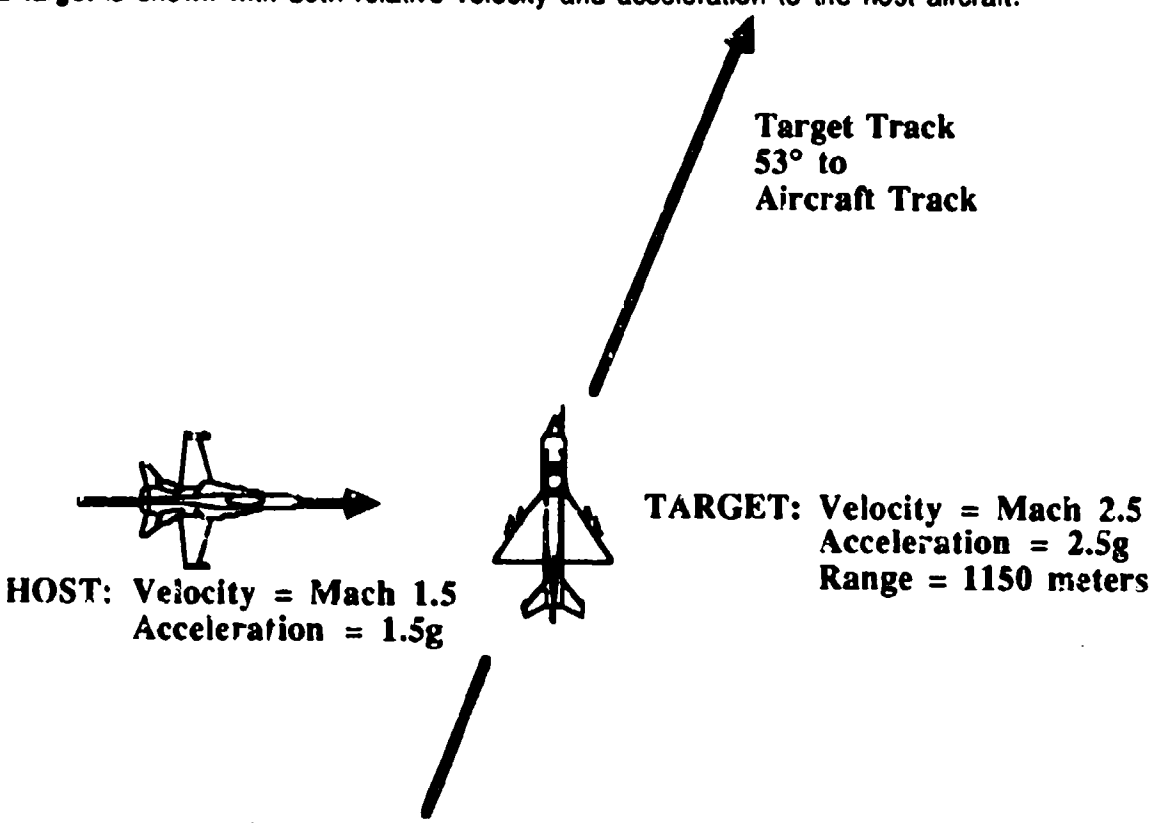

FIGURE 3.1 Stressing Case for Data Latency and Update Rates

Figure 3.2 then shows the true target azimuth to the host, the azimuth perceived by the store and the resulting error. The error is caused by the data latency and update rate. No compensation by the store has been assumed. If the store will only lock onto the target if the average error is less than one degree then the target will not be acquired as the average error is more than twice this figure. Fortunately, this situation is unrepresentative of the environment for the AIS. Although older stores such as Sidewinder and Maverick can only slew their seekers to supplied positional data, the more recent stores can compensate for latency and update rates by use of time tagged positional and rate of change data. This allows the store to recompute the correct target vectors by extrapolating the received position through time. The effect of this is shown in figure 3.3 where the store now additionally receives and processes position time tags and target velocity data. It is further assumed that the velocity data is 10% inaccurate. This is not an excessive amount as sensing of target relative velocities is more difficult than target positions and frequently is only possible by assuming constant velocities. Analyzing figure 3.3 it can be seen that the average seeker error is now less than 0.3 degrees and the target will be acquired. An important area not yet discussed is that of the other errors in targeting. These are typically the sensor and store errors through data latency, update rates and other errors, store to aircraft misalignment and non compensation for aircraft structure distortion. The AIS can therefore be given only a proportion of the overall error budget. For the case described above this proportion would be higher than for slower less agile targets and might be 25%. If we therefore further assume:

Maximum error angle = 1 degree
% of error to AIS = 25%
Relative Mach 2.2 target at 1150 meters range (660 mls)
Velocity sensing error = 10%

Then if data latency = L and Update rate = U

$$\frac{(L + 1/U)}{2} = \frac{1 \times 0.25}{N \arctan(660/115ON) \times 0.1} \qquad \text{limit N to infinity}$$

$$L + 1/U = 150 \text{ ms}$$

At an update rate of 25Hz this would limit the maximum latency through the AIS to 110 ms. To further define the partitioning of the 150 ms budget consideration of the design impact is required. Before that is considered the impact of target acceleration and the requirements of other store types should first be considered. Because of the difficulties in sensing target accelerations it is effectively impossible to directly compensate for acceleration errors. Acceleration of a target however has a relatively insignificant impact compared to velocity errors. For the latency and update rate figure of 150 ms derived above, the target would have to be maneuvering at 22g to have as much effect as the velocity. This is not seen as a likely situation. Table 3.1 shows approximate velocity and acceleration combinations compatible with the 150 ms figure. The previously derived figure of 150 ms would therefore seem to be a valid latency and update "budget" for a wide range of potential targets.

TABLE 3.1 Velocity and Acceleration Combinations

Velocity (Mach #)	Acceleration (g)	L + 1/U (ms)
0	22	150
1	11	150
2	2	150
2.2	0	150

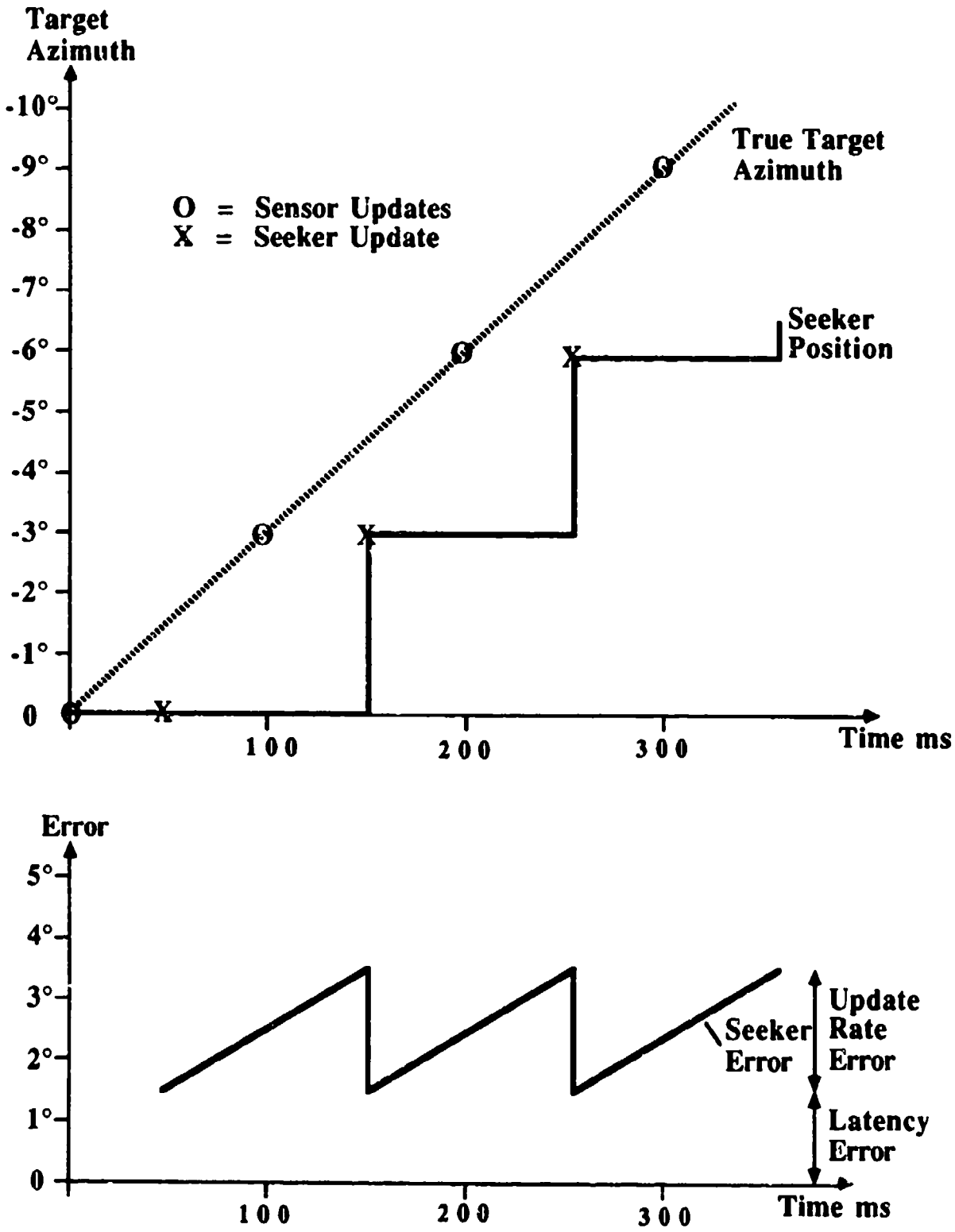

FIGURE 3.2 Seeker Error Due to Latency and Update Rates

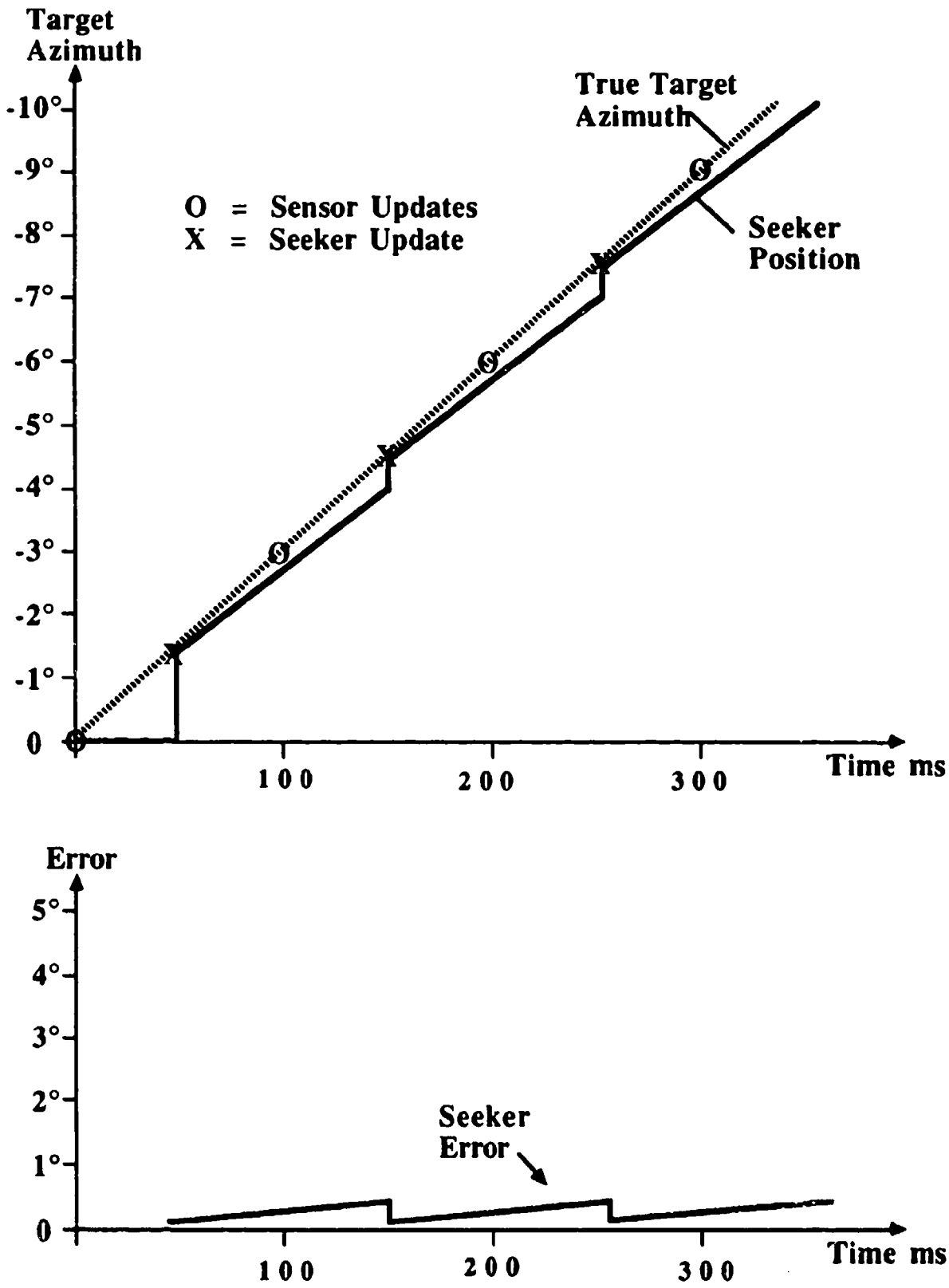

FIGURE 3.3 Improved Performance Due to Time Tag and Velocity

Other stores to be considered can be of many types:

- Non velocity/time tag compensating stores
- Beyond Visual Range (BVR) air-to-air stores
- Air-to-Ground Stores
- Anti Satellite Stores

It is possible that some MIL-STD-1760 stores will be developed that implement no compensation by use of velocity/time tag data. Three options are available for such stores: reduce the latency and update budget to 15 ms, compensate for latency in the AIS, or reduce the operational performance. The first of these options is considered unreasonable because of the design complexity that would be forced onto the AIS and the target sensing systems. The second option is worth consideration as this would transfer a task from the expendable store to the retained AIS. The AIS could extrapolate target positions through knowledge of its latency and update rates. The burden would be increased because the sensing system update rate would require AIS compensation and operational performance would be compromised because of the lack of knowledge of the store induced errors. This additional AIS sub function should be considered but not mandated. The third option may be inevitable as operational performance is always related to the capabilities of the stores carried. Target data latency and update rates for BVR stores are less critical than with short range stores. Because BVR stores lock on after launch the most critical target update is the last one received after launch. This update will be succeeded by a long gap before the next target update. This is because this next update is dependent on the store terminal guidance or other post release link. The effect is shown in figure 3.4 where the longest gap between updates is 11.5 seconds.

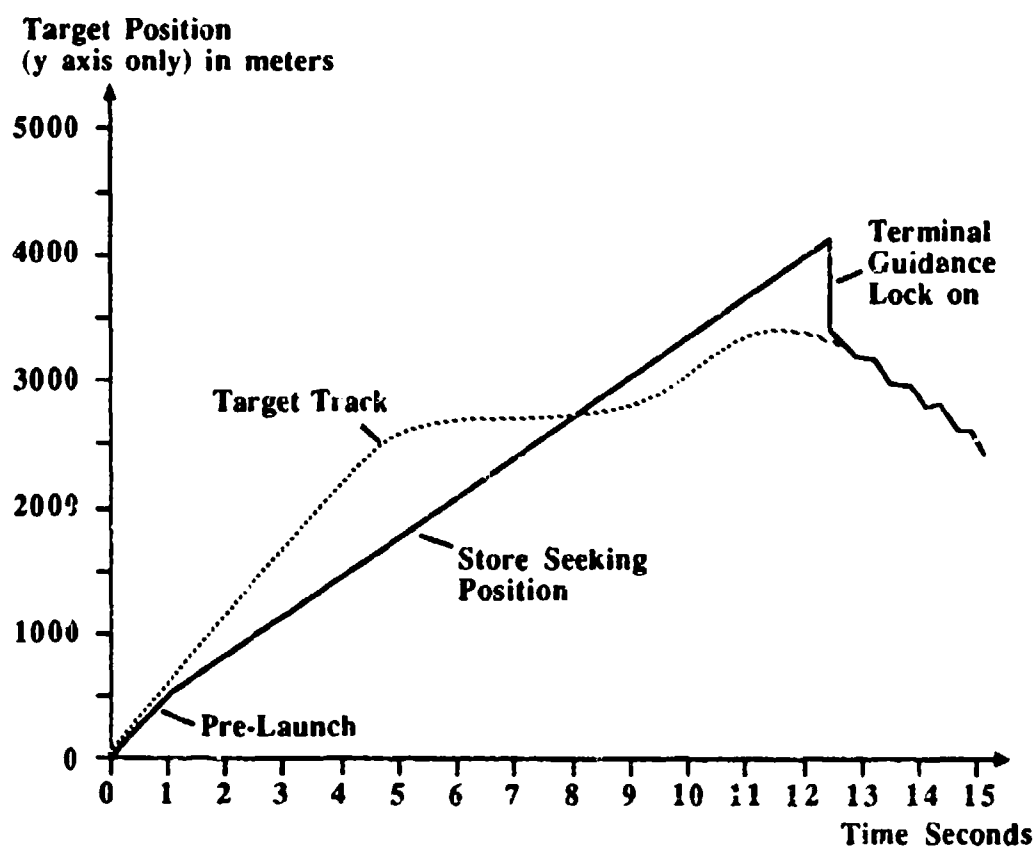

FIGURE 3.4 Update Rates and BVR Stores

The impact of this update delay dominates any AIS induced error in fact without other non-AIS mechanisms the target would probably never be acquired. It can be concluded than BVR stores place less stressing performance requirements on the AIS for target data. Air to Ground Stores can be considered in two categories for target data. First there are those stores (Maverick, Harpoon) which target by means of vector information from the aircraft. Whether they are short or long range they provide essentially the same requirements for data latency and update rates as the air to air stores. Secondly, there are those stores which intercept targets defined in terms of mapping coordinates. For these stores data latency can be ignored for the target data as the targets do not move. Data Latency does become of extreme concern for the aircraft data. This is considered in a later discussion. Anti-Satellite stores provide the most extreme cases for target velocity and acceleration. However, because the target velocities and accelerations can be precisely defined, compensation for long delays can be very accurate. Because of the much larger ranges associated with such stores they are of a lock on after launch category and therefore the AIS target data latency is not of such concern as the AIS aircraft data latency.

3.2.3.2.4.2 Aircraft Data Latency and Update Rates (to stores)

AVS Implementation: AVS performance was only specified for one type of Aircraft Data - system time. This was specified to be transferred with a maximum error of 2.5 ms. To achieve this figure several design features were required. System time receipt by the AVS was implemented as a high priority interrupt to existing processes, an independent timer was provided to store system time, the AVS corrected the system time value for known errors in the AVS and a special mechanism was provided in the MIL-STD-1553 Bus Controller to insert system time automatically into messages. Lastly, MIL-STD-1760 messages containing system time were given the highest priority for transfer. This AVS implementation is considered realistic and the design required not unreasonable given the importance of accurate system time. Most of the AVS stores use no other aircraft data. The exception is AMRAAM which, although not a full MIL-STD-1760 store, is representative enough of the transfer requirements. No performance requirements were specified for data latency but performance goals and achievements were similar to those for target data described above.

Other Rationale: Although there are similarities between the data latency requirements for aircraft data and target data, three major differences require separate consideration. These are the special case of System Time, the different uses of aircraft data and the greater accuracy of available aircraft data.

a. System Time - System Time is usually taken to be the time reference for all data in the aircraft. In fact there may be different system times but any combination of separate data sets in a function must first ensure all are related to a common time reference. System Time is usually taken as the Aircraft INS system time and it is easiest if every other system and store on the aircraft is synchronized to that time. System Time is a special case because it cannot be time tagged for correction due to data latency. It is the reference used by stores and aircraft to determine time tag corrections. As an example if a target update is received at 104 seconds as angle 30, angular rate 20/second and time tag 103 seconds then for the store to compensate to the true target position at 104 seconds it must have an accurate system time reference to determine that time is 104 seconds. In practice this will be a timer updated by AIS data and it is the accuracy of that AIS System Timer data that must be preserved. Data Latency and update rates are not as relevant because time has an accurately known rate of change. Because System Time will be used in computing all time tagged data corrections its received accuracy will have to be higher than most of time tags. If the targeting case considered above is analyzed, time tags were used to correct for target velocities of Mach 2 to 2.5. For the System Time to contribute minimally to further errors than the accuracy would have to be better than 1/10 of the maximum timing error of 150 ms. This would give a required accuracy of 15 ms. For the case

of an inertially guided store with no terminal guidance then a Cumulative Error Probability (CEP) of 30 meters might be required. If released at Mach 1 then this would correspond to approximately 100 ms error. If 10% of that error is budgeted to the System Time than a required accuracy of 10 ms can be derived. To allow for all cases over the timeframe of an AIS a maximum inaccuracy of 5 ms is proposed (100% better than the INS store case) but no specific requirements for latency or update rate are suggested (provided their effects are compensated for).

b. Aircraft Data - There are many data types listed as aircraft data in the June 1985 Notice 1 Logical Design but the key ones relevant to data latency and update rates are those associated with identifying the store position in an inertial frame. This requires communicating to the store, aircraft position and velocity data. These are both usually known accurately by the aircraft but will change during the time delay through the AIS. The store will be able to compensate for position errors by use of time tagged data but will not be able to correct velocity data until the store INS is aligned with the aircraft. The most stressing case is that of a medium range store and a typical case might be:

Range:	36,000 meters (22 miles)
Speed:	Mach 2 (600 meters/sec)
Max error:	30 meters (100ft)
Alignment time:	1 second in captive flight prior to release

The store will therefore be in free flight for 1 minute, which is too short a time for INS long-term positional drift to cause errors but the INS velocity error at release must be less than 30 meters a minute. Allowing AIS delays of 10%, this figure gives the velocity error as 0.05 meters/second. If the store is aligned during final aircraft approach the average acceleration could be 4g (160 meters/sec^2). This sets the first approximation for maximum time delay as:

$$0.05/160 = 312 \text{ uS}$$

This figure is impossible to achieve so two compensating factors should also be considered. These are the ability of the store INS to use its own sensed accelerations to partially correct for the aircraft acceleration and also the ability of the store to apply a Kalman filter to successive data updates to progressively filter out errors. Allowing for 80% compensation by time tagging and a 25% error reduction by Kalman filtering at each update then using L and U for data latency and update rate:

$$160 \times 0.2 \times L \times (0.75)^U = 0.05 \qquad L \times (0.75)^U = 1.56 \text{ ms}$$

The table below lists values of L and U that provide the required accuracy.

L (mS)	U (Hz)	Velocity Error (m/s)
1.56	1	0.05
27.7	10	0.05
50	12	0.05
100	14.5	0.05
200	16.09	0.05
1000	22.5	0.05
2076	25	0.05

These figures are similar but less stressing than those derived for target data. For longer range stores these are usually aligned prior to the final approach phase and therefore lower acceleration and longer alignment times reduce the stress on the data timing requirements. The main consideration with such stores is removal of residual acceleration errors caused by the uncertain initial alignment with the gravity vector. These errors are removed through a process called fine alignment. This requires updates of accurate aircraft velocity data at between 0.02 and 1 Hz over some minutes.

3.2.3.2.4.3 Data Latency - Design Considerations A high level representation of the AIS data paths is given in figure 3.5. Avionics data from a data bus (PI-Bus or other form) is received by the AIS, processed and then regularly output to a store via a MIL-STD-1553 Bus. The three separate activities are shown in figure 3.6 with the build up to data latency through the AIS being caused by the lack of synchronization of activities, the finite time to process data and the finite time between updates. The AIS processing cycle can be synchronized to the avionics update and the MIL-STD-1553 output but this can become very complex when many data types are received at different rates or the avionics or stores update cycles change dynamically. For the store update cycle to be effective the Avionics update cycle and the AIS processing cycle must be at least as fast. Therefore Update Rate impacts are: Avionics Bus Loading, AIS Processing Power required, and AIS Bus Loading. The worst case data latency will the sum of the avionics, processing and MIL-STD-1553 Bus cycle times. Therefore Data Latency impacts are:

a. Avionics Bus Loading
b. Processor Power required
c. Update Rate; made up of Avionics Bus Loading, Processor Power, and AIS Bus Loading

Clearly obtaining improvements in data latency will have about twice the design impact as improving the update rate alone. The conclusion drawn is that data latency should contribute approximately twice as much error as update rate. From the previous requirements for target and aircraft data this would be:

Data Type	Maximum Latency	Minimum Update Rate
Target Data	100 ms	20 Hz
Aircraft Data	120 ms	15 Hz
System Time	10 ms*	-

*Perceived as maximum inaccuracy of received data.

3.2.3.2.4.4 Analog Data Latency

AVS Implementation: No performance was specified for analog data latency.

Other Rationale: This is discussed by signal type:

a. HB1/HB2 - These signals may be used for a number of purposes including GPS and Time Correlation Pulses (TCP). A 500 ns latency is equivalent to a 150 meter error in navigation data but this would only occur if some data from different navigation sources did not suffer the same delay. In practice this is not the case and is tolerable. 500 ns represents an allowance for a 100 meter cable length and a prewarning of 1 us for TCP from aircraft transmitters.

b. HB3/HB4 - The majority of signals for these interfaces will be video of target data. A latency of 20 ms represents one frame delay through video format converter and 0.5^{o} error in targeting a moving target with 25°/second relative angular rate.

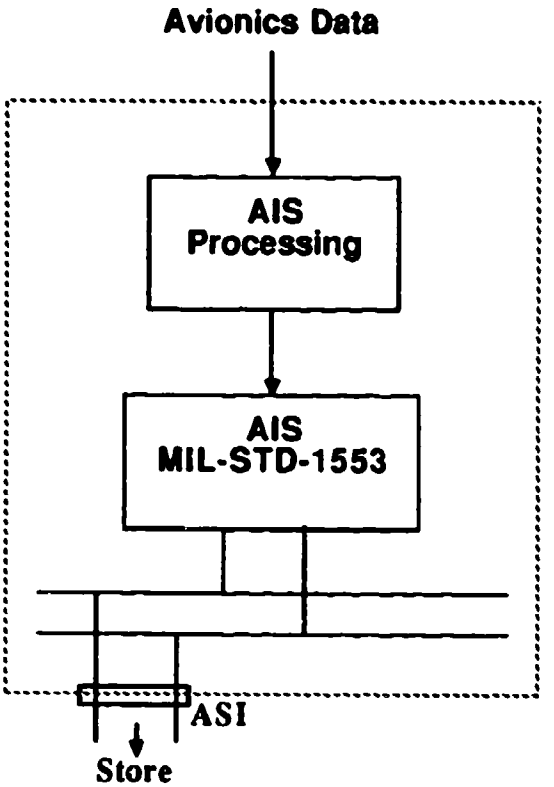

FIGURE 3.5 Data Flow through the AIS

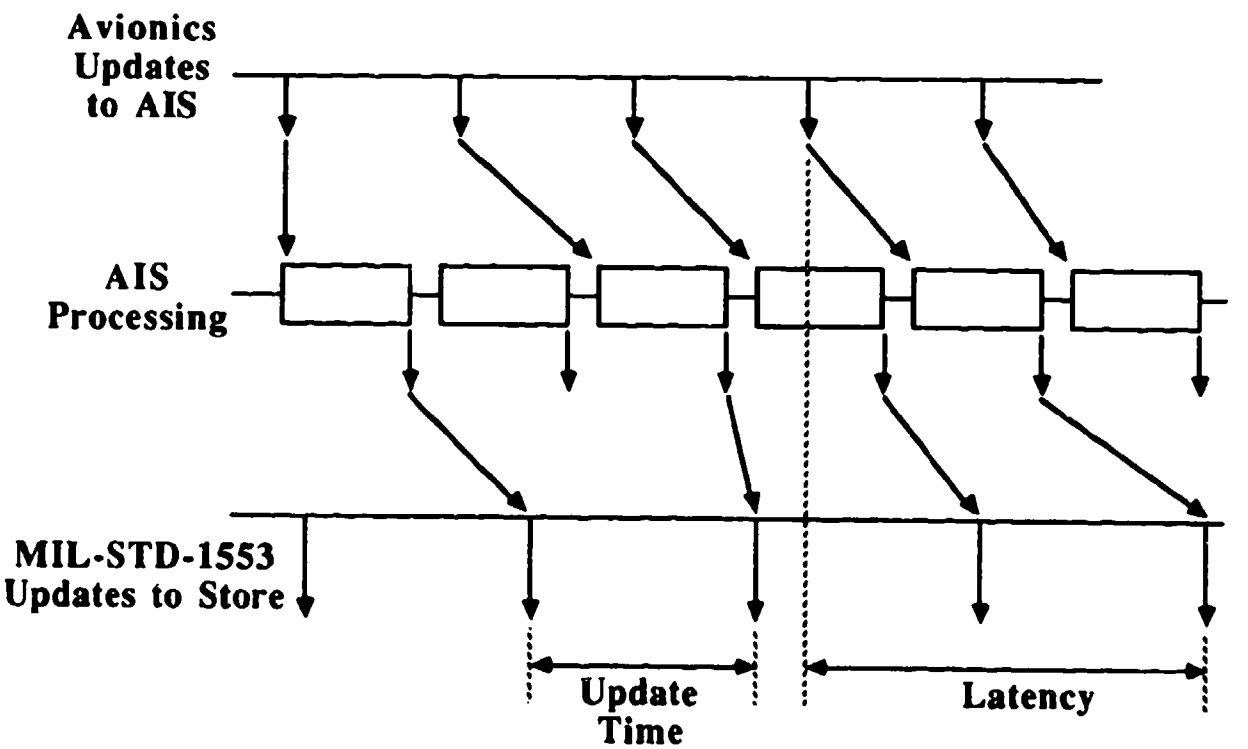

FIGURE 3.6 Data Cycles

3.2.3.3 Unique to Store Formatting [8.2.3.3] The rationale was provided in the Appendix A guidance and no further rationale is necessary.

3.2.3.4 Recomputation to Store Axes [8.2.3.4] The rationale was provided in the Appendix A guidance and no further rationale is necessary.

3.2.3.5 Interface to Store [8.2.3.5]

3.2.3.5.1 Analog Network [8.2.3.5.1]

ISSUE: What Performance?

AVS Implementation: The AVS implemented a highly stressing network capacity. This corresponded to that specified in the July 1983 draft MIL-STD-1760A. Although successfully implemented this networking effectively mandated a centralized network.

Other Rationale: MIL-STD-1760 recommends a network capacity (reference Figure 13 of MIL-STD-1760). This recommended network capacity, although less than that of the AVS, tends to force a centralized network solution to avoid a significant quantity of aircraft high bandwidth cabling. Appendix A recommends a network capacity to provide for:

a. One store at a time to be aligned using GPS data
b. Two radar active stores to be TCP "blanked"
c. Two stores to send video to the aircraft at a time (to allow two stores to be simultaneously, targeted as specified in [8.2.1.1.3.c])

Note that, as shown in figure 3.7, the network implementation is likely to be only marginally increased in complexity if ASI-ASI paths are required for Type A signals.

3.2.3.5.2 Release Consent [8.2.3.5.2]

ISSUE: What performance?

AVS Implementation: No specific Release Consent performance was specified for the AVS.

Other Rationale: MIL-STD-1760 Notice 3 has mandated Release Consent as an interlock on the majority of safety critical functions. Store designers will therefore depend on high integrity implementation of the signal. This has to be specified as both obsolete performance and the independence of Release Consent from other AIS functions.

3.2.4 Data from Store [8.2.4]

ISSUE: What performance?

AVS Implementation: No general performance for data from stores was specified for the AVS.

Other Rationale: Except where data from stores is routed to another store the accuracy, latency and update rate performance can be reduced by approximately 50% of that for data to stores. This applies even though it is unlikely that timetag/change rate compensation can be applied for data from stores.

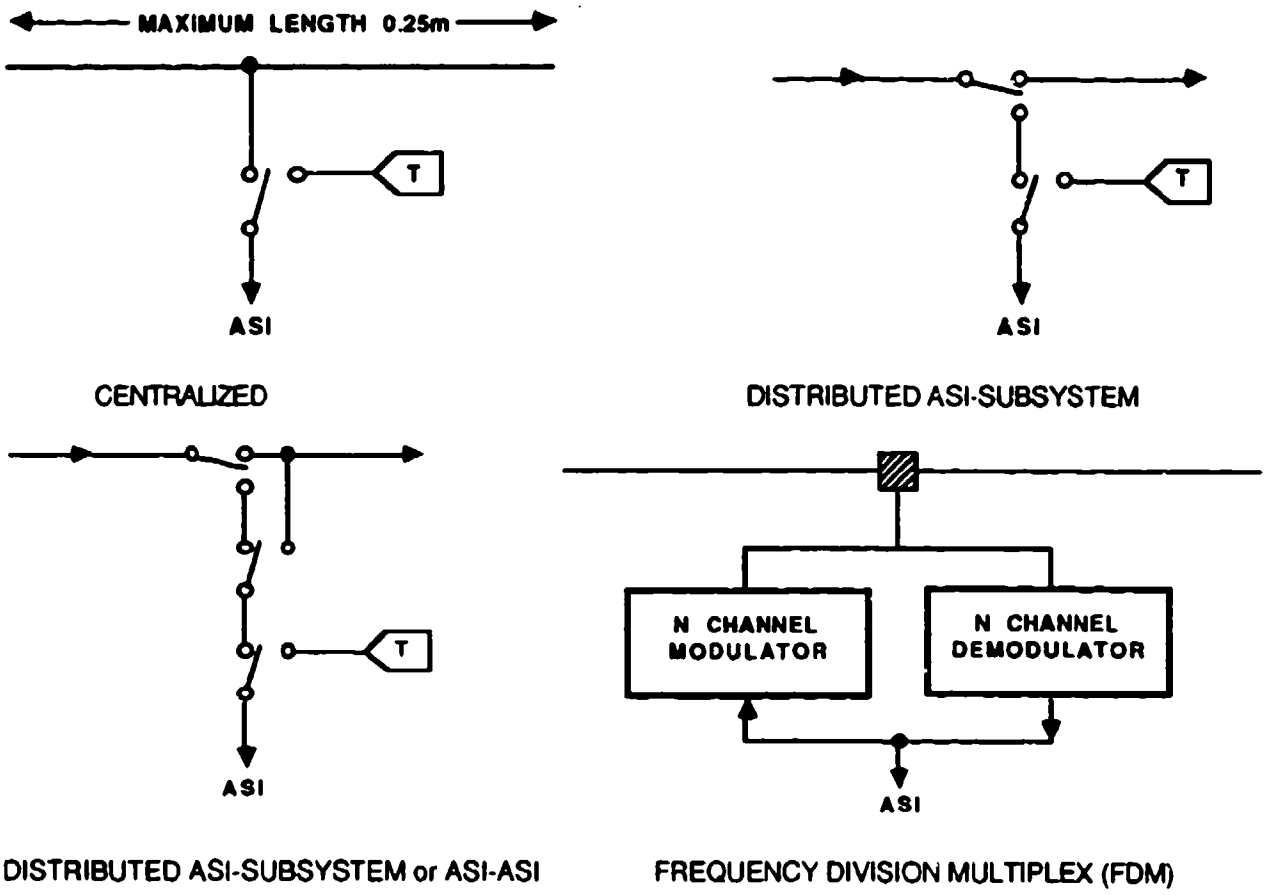

FIGURE 3.7 Analog Networks (for Type A signals)

3.2.5 Store Selection [8.2.5]

3.2.5.1 Station Determination [8.2.5.1]

ISSUE: What performance?

AVS Implementation: The AVS implemented a similar algorithm to that of the one presented in Appendix A. No weapon bays were considered. This implementation enabled a simple, reliable and optimized software solution of selection during stressing releases (bombs).

Other Rationale: The selection algorithm is the same as the release algorithm to provide the maximum number of selected and ready stores at the best locations during release. This is true for all store types. Further comments related to the stated rules are:

a. [8.2.5.1.a] - Obvious

b. [8.2.5.1.b] - See [8.2.7.6]

c. [8.2.5.1.c] - Deployment of weapon bays causes a number of performance degradations including aerodynamic drag. It is therefore best to reduce these problems by

exhausting one bay before opening another. The position with pylon mounted stores is however much different. As shown in figure 3.8 the paths followed by stores after release, particularly bombs can be unpredictable immediately following separation. It is quite possible for stores to collide unless all possible measures are taken to avoid adjacent paths. Such measures include avoidance of successive releases from same or adjacent stations.

d. [8.2.5.1.d] - See [8.2.5.1.c] above

e. [8.2.5.1.e] - A rule to minimize potential obscuring of the target

f. [8.2.5.1.f] - A default rule to ensure resolution of the algorithm where two or more stores equally satisfy the previous rules.

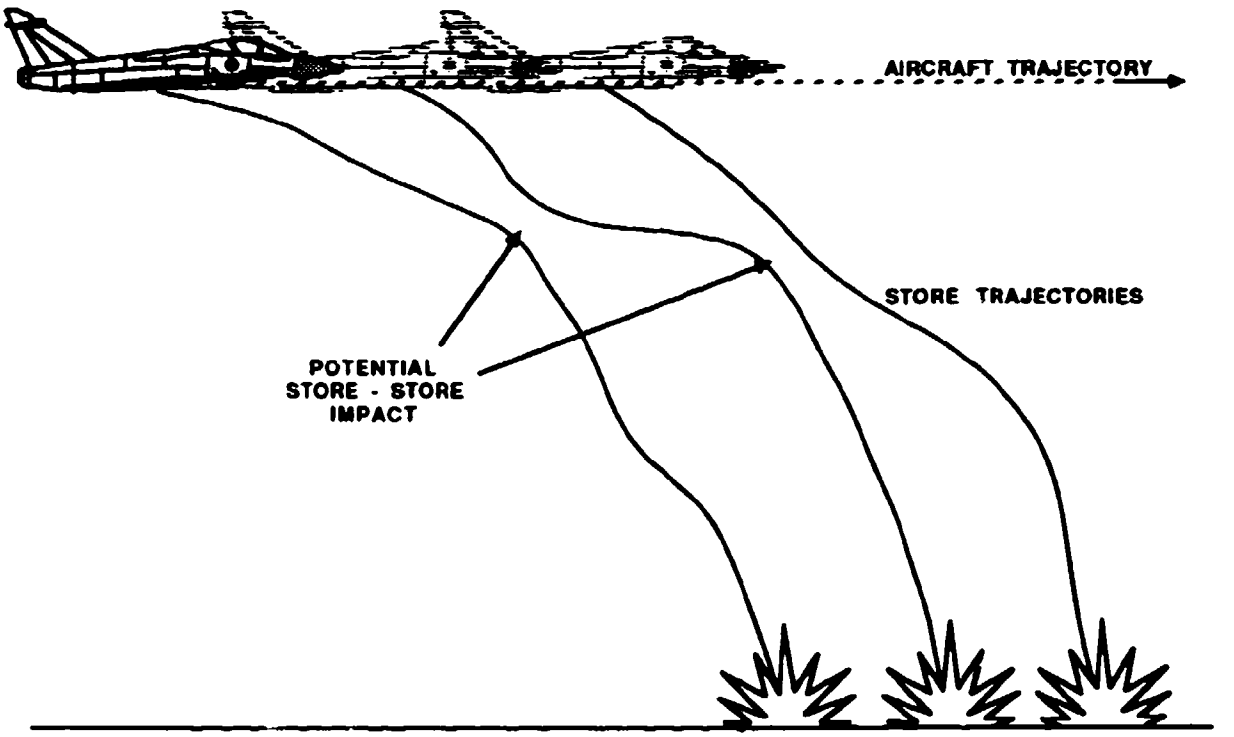

FIGURE 3.8 Store Trajectories

3.2.5.2 Store Initialization Management [8.2.5.2] The rationale was provided in the Appendix A guidance and no further rationale is necessary.

3.2.5.3 Release Package Data Retention

ISSUE: What performance?

AIS Implementation: Described in 2.4.5.5.

Other Rationale: Provision of a minimum of eight packages provides for pre-selection of sufficient attack/defense setting options to preclude the need for complex crew operations at planned targets. The data included per package in Appendix A allows for the majority of data types that are prebriefable.

3.2.6 Store Arming/Fuzing [8.2.6] No further rationale is required for those aspects affected by MIL-STD-1760.

3.2.7 Store Release [8.2.7]

No further rationale is required for those aspects affected by MIL-STD-1760. Brief rationale is however provided below.

[8.2.7.1] Figure 3.9 shows the signals and internal circuitry of a typical rack (the MAU-12). Connection of 28 volts to either EED will initiate release of the store provided the inflight lock is in the enable position. Connection of 28 volts to either the Nose or Tail Fuze signals during store release will result in potential arming of the ejected store by retention on the rack of arming lanyards.

[8.2.7.2] Figure 3.10 shows a number of simplified weapon bay carried stores. In bay A the store must not be released until after the bay has been opened and, if the store is a forward firing store, the S & RE deployed beyond the bay by means of vertical translation devices. Such a deployed S & RE is shown for bay C. In bay B the S & RE is not deployed but is instead rotated to allow many stores to be ejected through the same bay opening. Should the store shown shaded be ejected than an aircraft hazard would result. The AIS should therefore implement high integrity mechanisms to ensure proper bay management.

[8.2.7.3] No further Rationale required. A typical sequence of events is shown in figure 3.11.

[8.2.7.4] Separation timings have to be accurate to 3 ns to minimize the CEP. For a non guided bomb release 3 ns corresponds to 1 meter error at mach 1. Release intervals at 30 ns allow for high density deployment of stores against targets even at high attack velocities. 30 ms pairs release allows for 10 bombs to be released in balance and land within a 100 meter area at a mach 0.6 release. Note that the AIS release performance is dominated by dumb bombs. Smart stores are less stressing because they can compensate for a less demanding AIS performance.

[8.2.7.5] No further rationale required.

[8.2.7.6] Store gone status has to be determined quickly during release to enable rapid releases without violation of aircraft balance. Unfortunately as shown in figure 3.12 the S & RE return signals are likely to be unstable for many milliseconds due to switch contact bounce. Appendix A states that 3 of 5 signals detected changed is a firm indication of store gone. This also avoids the potential hazard of only monitoring one signal (interlock) which could fail open circuit for other reasons.

[8.2.7.7] No further rationale required.

[8.2.7.8] No further rationale required.

3.2.8 Store Jettison [8.2.8] Store jettison as considered by [8.2.8] is not affected by MIL-STD-1760. No further rationale is therefore given additional to that of 2.4.8 and the Appendix A text.

3.2.9 Inventory [8.2.9] No further rationale required as this function is not affected by MIL-STD-1760.

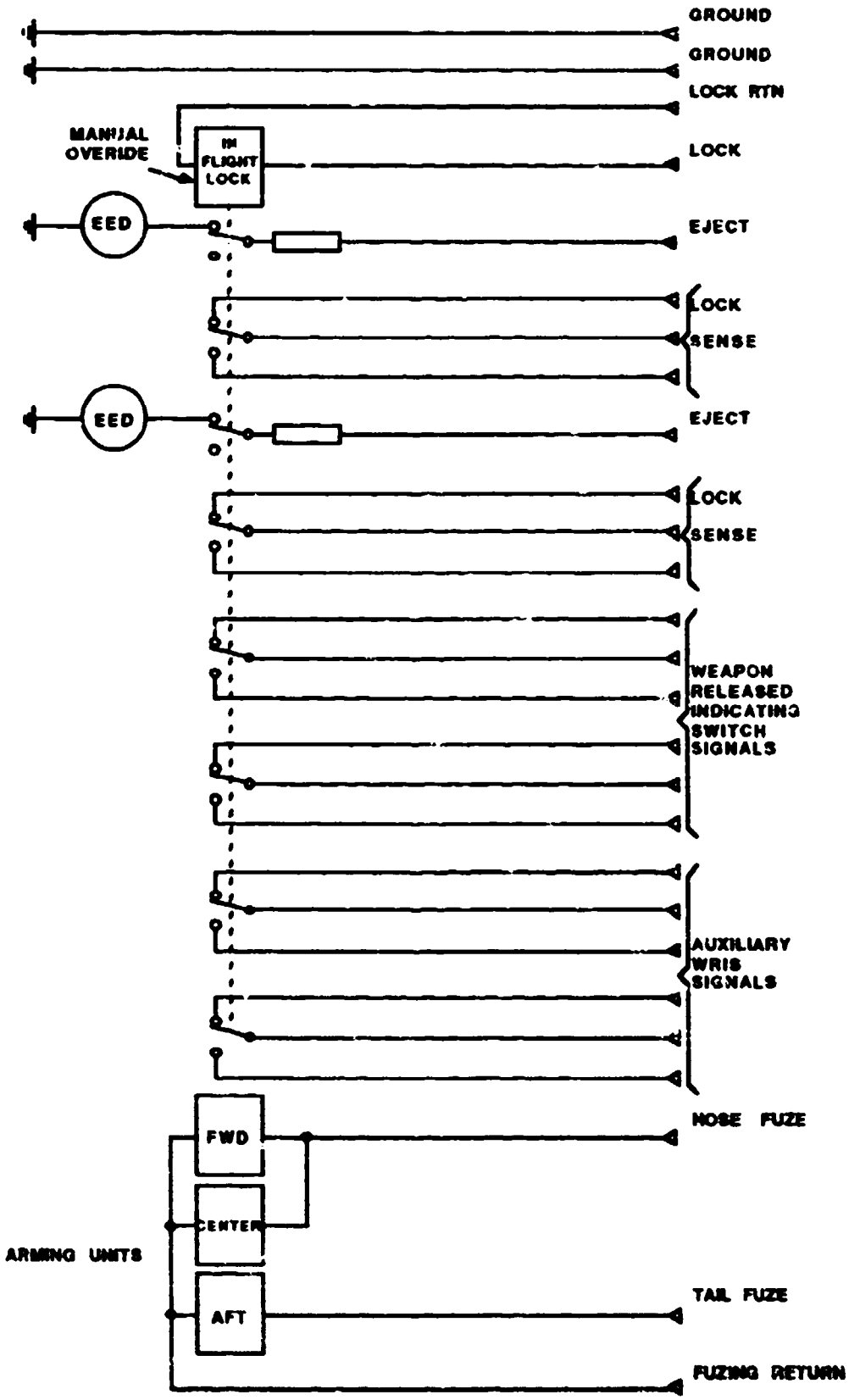

FIGURE 3.9 Typical S & RE (based on MAU-12)

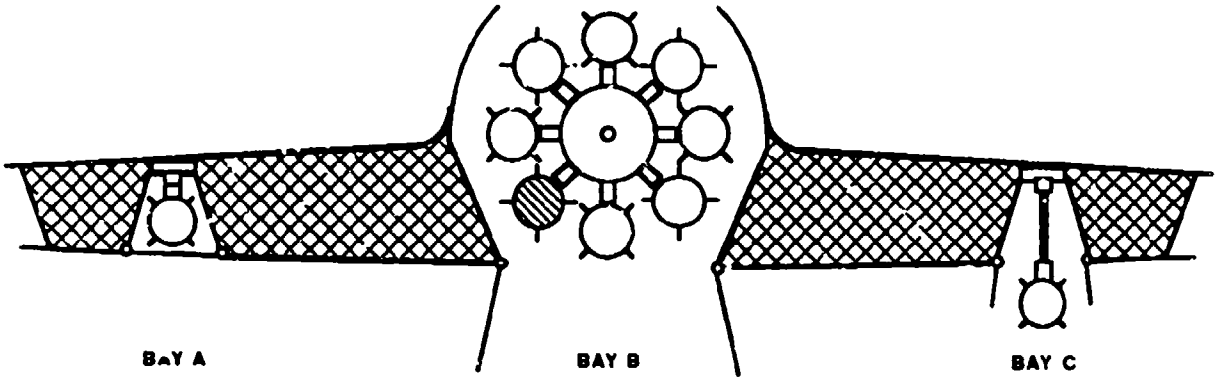

FIGURE 3.10 Stores in Weapon Bays

3.2.10 Crew Interfaces No further rationale required as these functions are not significantly affected by MIL-STD-1760. See also 2.4.10 and 3.2.2.2.

3.2.11 Nuclear Control [8.2.11] Rationale for the Appendix A guidance is provided in the type A system specification CDRL - COOK.

3.3 AIS General Performance [8.3]

3.3.1 Expansion Provision [8.3.1]

AVS Implementation: No specific expansion provision was specified for the AVS.

Other Rationale: Refer to [8.3.1.a] and [8.3.1.b] to relate this rationale:

a. The guidance in Appendix A provides for a 100% increase in software stored and processed to allow for a 40% increase in both store types and modes of usage (1.4x1.4 = 1.96).

b. A 100% spare data bus capacity is specified to match the processing power spare capacity.

c. A 25% of high bandwidth, discrete and power wiring is specified as spare to allow for a proportional increase in the number of weapon stations.

d. All other signals have only 10% spare capacity as these relate to discrete signals for critical controls and communication to aircraft systems (for example the engines). This is not likely to noticeably increase during the aircraft life.

e. A 50% of internal data bus capacity is specified unused to match the unused processing power. These usually increase proportionally with each other.

f. A 20% of central equipment module space and power consumption is specified as unused to allow for the extra interfaces to support the potential 25% increase in weapon stations (see c. above).

3.3.2 Reliability [8.3.2] These factors are not significantly affected by MIL-STD-1760. Rationale is therefore generally brief.

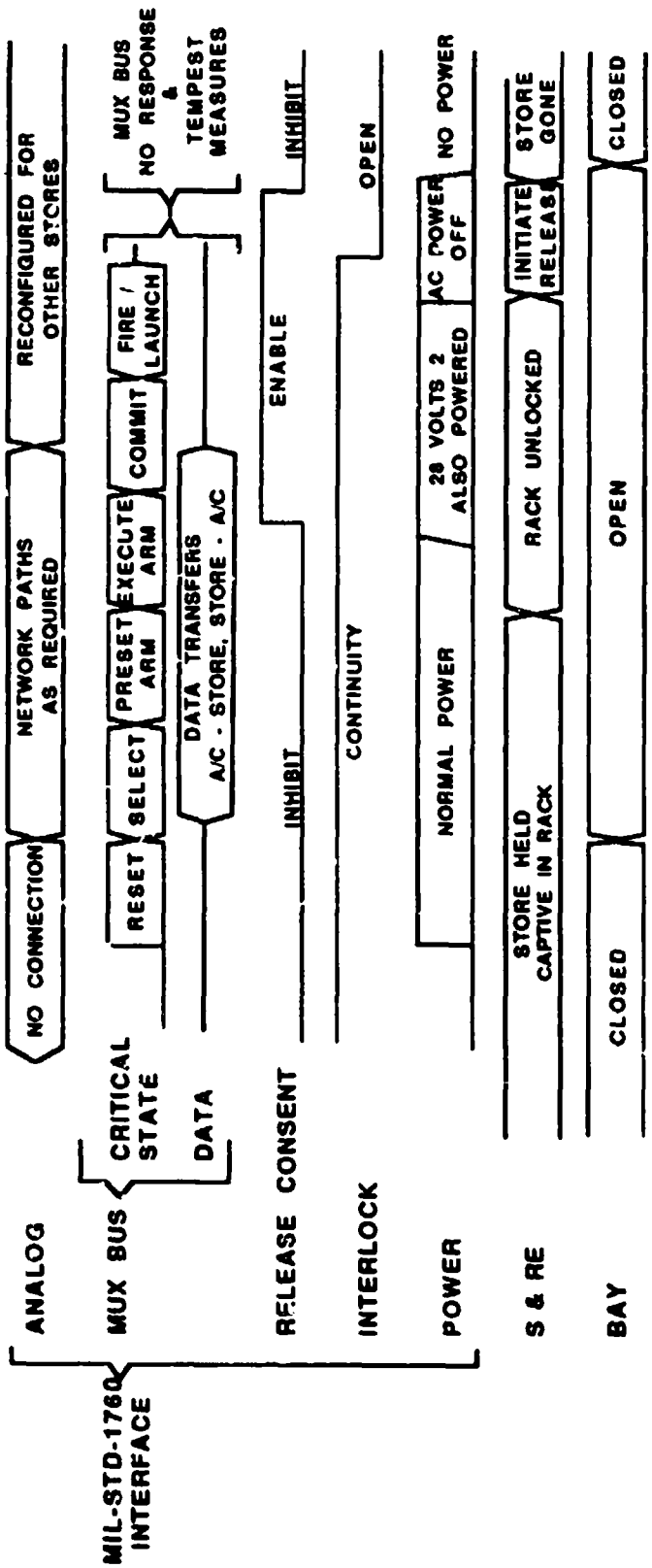

FIGURE 3.11 Typical Separation Event Sequence

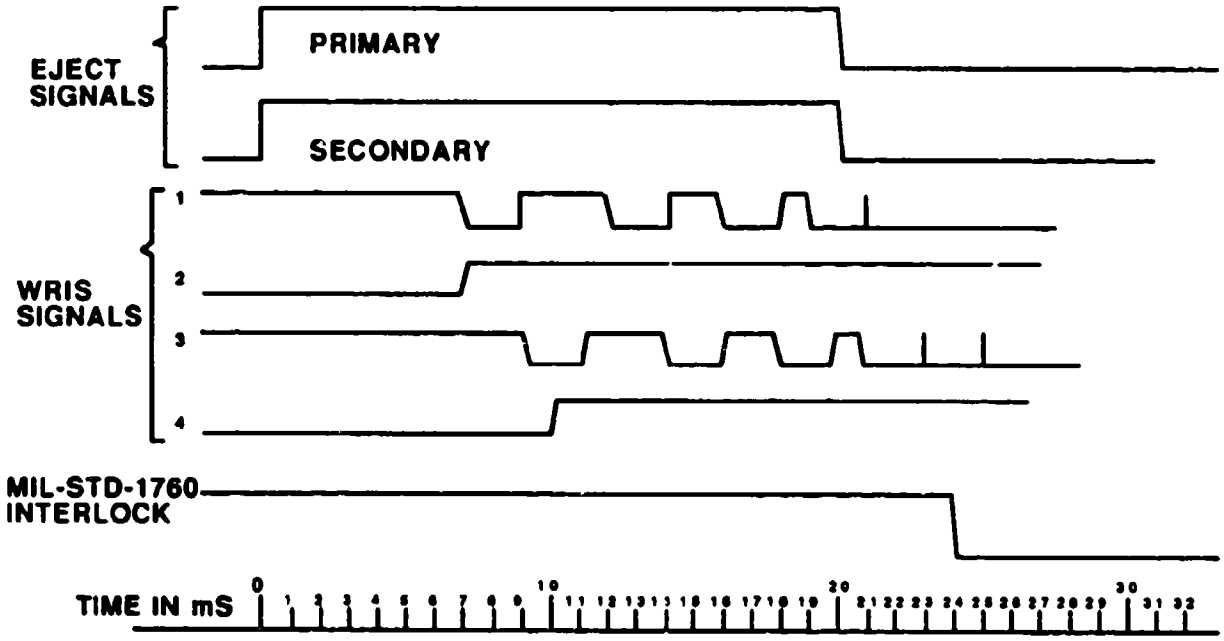

FIGURE 3.12 Hang Up Detection

3.3.2.1 Mean Time Between Failure (MTBF) [8.3.2.2]

RATIONALE: An MTBF of 1000 hours is specified, as this effectively sets AIS failures as a very minor cause of projected mission failures, while not imposing too stressing a requirement on AIS design. It is necessary to consider specifying a mission point because otherwise it is possible to produce a system that appears to just satisfy the requirements while in fact offering either excessive over design or unacceptably poor performance except in unrealistic circumstances. To explain this point further consider figures 3.13, 3.14 and 3.15. Figure 3.13 shows an AIS partitioned in an abstract sense into four areas:

- Fully redundant and full Built in Test
- No redundancy and full Built in Test
- Fully redundant and no Built in Test
- No redundancy and no Built in Test

If the system has 90% circuitry redundant (weighted by defect probability) and 98.5% BIT coverage then parts b. and d. contribute little to the overall defect rate because they comprise less than 2% of the circuitry that can fail. The effect of c. and d. on the success performance is dramatic. Although c. is fully tested OK by BIT at mission start, should a defect occur in c. the system will fail. Since d. is untested by BIT a defect will not only cause system failure but may have occurred before in any of the hours of use before the mission started. If the AIS is 100% ground tested every 200 hours then there will be an average of 100 hours of probably defects in d. at a mission start. These effects are shown in figure 3.14 where d. is 200 times more likely to lead to mission failure than a even though a. contributes 600 times more defects. The AIS should therefore have both a high degree of redundancy and BIT to avoid a high failure to defect ratio. This is difficult to specify directly and as shown in figure 3.15 cannot be specified without consideration of hours since last 100% test. In figure 3.15 an example system with no BIT has appalling success performance after 100 hours use, but appears better immediately after a 100% test.

3.3.2.2 Mean Time Between Critical Failure (MTBCF) [8.3.2.3]

RATIONALE: A 1 in 10^7 hours MTBCF is approximately equal to one critical accident per aircraft type in 20 years (assuming 1000 aircraft @ 500 hours/year). This is not usually achieved in practice. A typically specified figure for the airframe itself is 1 in 10^5 years (5 accidents per year).

3.3.2.3 Damage Tolerance [8.3.2.4] The rationale was provided in the Appendix A guidance and no further rationale is necessary.

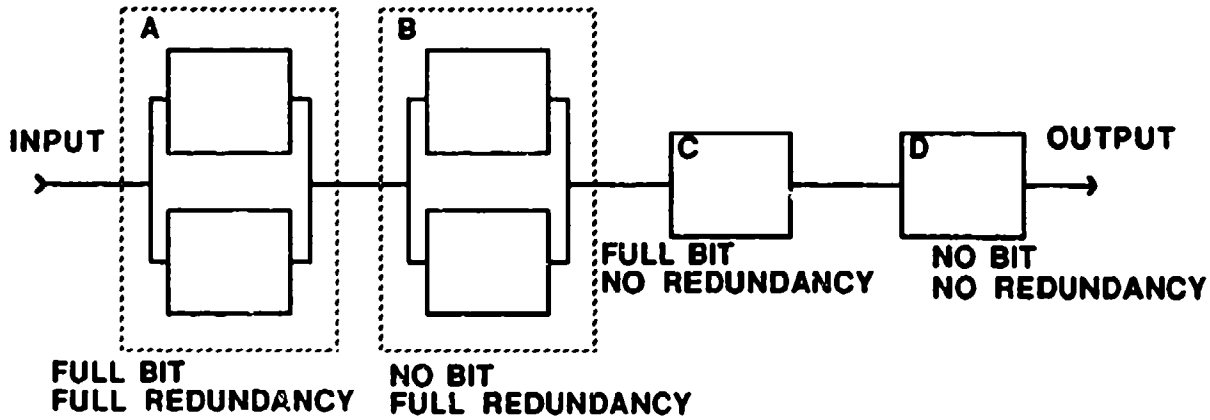

FIGURE 3.13 Mission Success Analysis

3.3.3 Maintainability [8.3.3] These factors are not significantly affected by MIL-STD-1760 and no further rationale is required beyond that provided in the type A system specification CDRL-COOK.

3.3.4 Volume/Mass [8.3.4] Same discussion as above in paragraph 3.3.3.

3.3.5 Environmental Requirements [8.3.5] These factors are not significantly affected by MIL-STD-1760 and no further rationale is required beyond that provided in the type A system specification CDRL-COOK.

3.3.6 Miscellaneous [8.3.6] The rationale was provided in the Appendix A guidance and no further rationale is necessary.

3.4 Interfaces [8.4]

3.4.1 Power Supplies [8.4.1]

ISSUE: What performance for aircraft supplies?

RATIONALE: A strict limit on allowed voltage drop from aircraft power supplies is specified because otherwise there will be no allowance for voltage drops across the AIS connectors, wiring and switching elements. The specified voltages allow for 1.5 volts DC and 2.5 volts AC drop across the AIS. The currents and overcurrents specified are a mapping of the MIL-STD-1760 ASI in current performance for four ASI (see [8.2.1.1.3.c]) allowing for 20% of current to be consumed by the AIS with a safety factor.

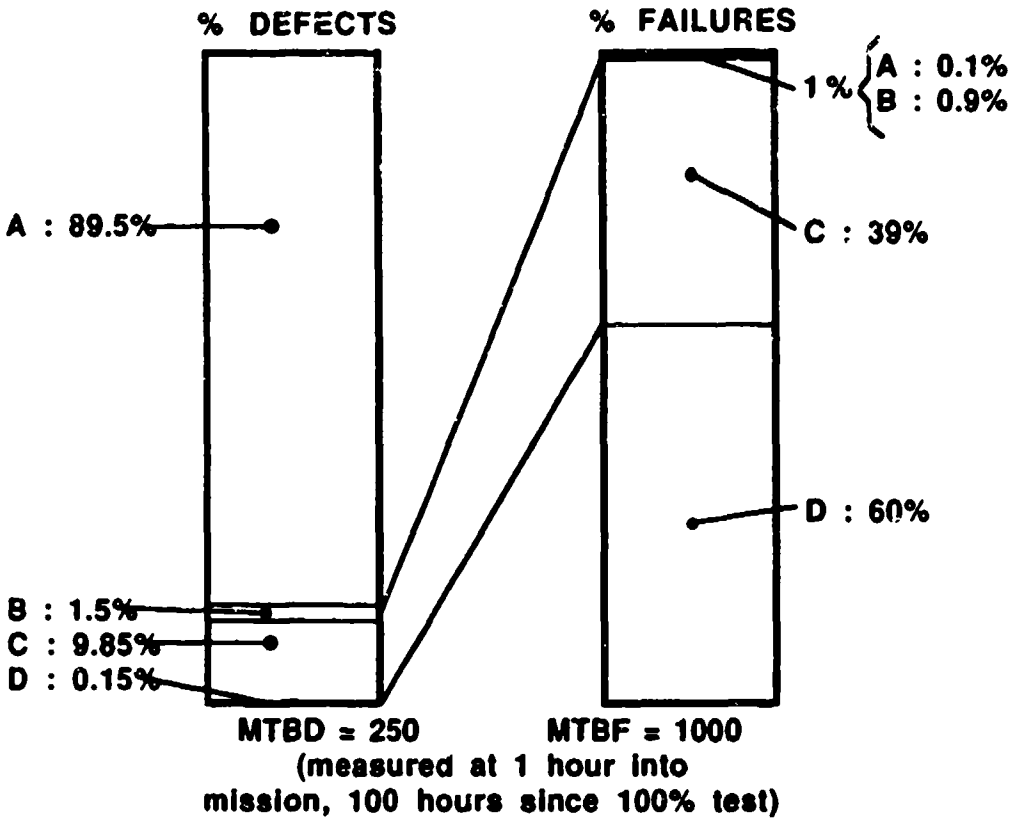

FIGURE 3.14 Relative Contribution to Mission Failure

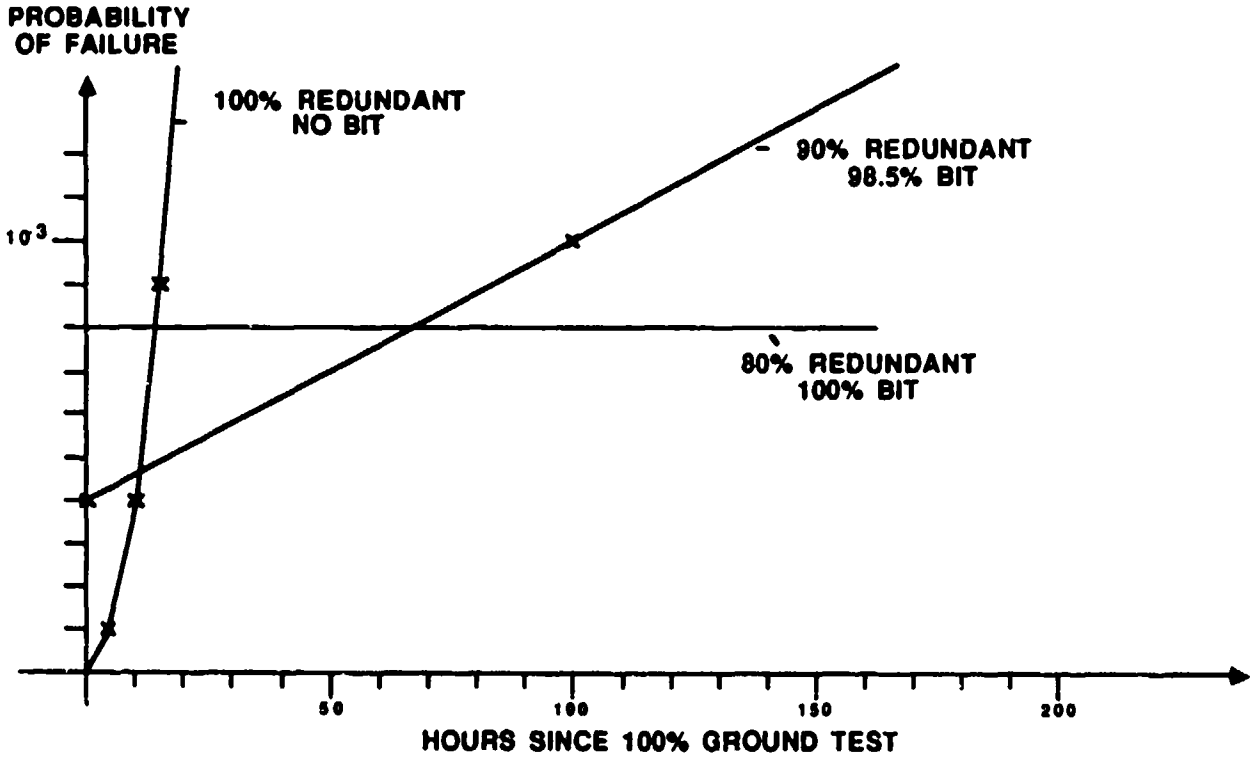

FIGURE 3.15 Probability of Mission Failure (after 1 hour)

3.4.2 Digital Interfaces [8.4.2]

ISSUE: What performance for aircraft digital interfaces.?

AVS Implementation: The AVS implemented a MIL-STD-1553 data interface from the AIS to the avionics. This used approximately 25% of available data bus loading.

Other Rationale: Given the predicted data bus rates and addressing required, a MIL-STD-1553 data interface is unlikely to be adequate for future AIS - aircraft interfaces. The predicted data rates and addressing rates were calculated as shown below. Two High Speed Data Bus (HSDB) terminals are specified to provide for redundant AIS processing centers.

Data Rate Items	Words/Second
Target data for 4 active targets -16 words/target @ 20 Hz bidirectional	2560
Aircraft data - 30 words (21 INS and 9 air data) @ 15 Hz	450
Radar data - 16 words @ 20 Hz	320
Store Status for 64 stations - 64 words @ 4 Hz	256
Control Prompts - 16 words @ 20 Hz	256
Miscellaneous Data - 256 words @ 1 Hz (average)	256
Subtotal	4162
50% Expansion	2081
Total	6243

Addressing Item	Words/Second
Data for 16 targets - 16 words/target and bidirectional	512
Aircraft Data - 21 INS and 9 Air Data words	30
Radar Data - 16 words	16
Data Load/transfer (dedicated 'subaddress') - 32 words bidirectional	64
Aircraft/Store alignment - 64 stations @ 6 words	384
Release Data Packages (3 off) - 56 words each	424
Control Prompts	16
Store Stations (64 stations) - 1 word	64
Fire Control Aircraft Steering data - 16 words	16
Inventory (64 stations) - 8 words bidirectional	1024
Subtotal	2550
100% Expansion	2550
Total	5100

3.4.3 Discrete Interfaces [8.4.3] The rationale was provided in the Appendix A guidance and no further rationale is necessary.

3.4.4 Analog Interfaces [8.4.4]

ISSUE: What AIS - aircraft performance?

RATIONALE: The performance specified in Appendix A supports the networking of [8.2.3.5.1] while also providing for single fault immunity of each interface type. This results in dual 1.6 GHz interfaces.

3.4.5 Connectors [8.4.5] The rationale was provided in the Appendix A guidance and no further rationale is necessary.

4. RATIONALE FOR APPENDIX A SECTION 9

Paragraphs 4.1 through 4.3 of this section provide rationale derived from the AVS and other sources to support the guidance given in paragraphs 9.2 through 9.4 of Appendix A. Issue statements and subjects have been summarized. When rationale was supplied in the guidance text, further rationale is not supplied.

4.1 AIS Functional Partitioning

4.1.1 Partitioning of External Functions

4.1.1.1 High Bandwidth Signals [9.2.2.1.1]

ISSUE: How should High Bandwidth network be partitioned?

RATIONALE: This issue is considered in more detail in paragraph 10.1.1.1.1 of Appendix A and the rationale is provided in paragraph 5.1.1.1 of this document.

4.1.1.2 MUX Buses [9.2.2.1.2]

ISSUE: How should the MUX Bus and its control be partitioned?

RATIONALE: The guidance given for this issue results from addressing the more detailed issues discussed in the paragraphs of 10.1.2 in Appendix A. Rationale supporting these more detailed issues is given in the paragraphs of 5.1.2 in this document.

4.1.1.3 Low Bandwidth [9.2.2.1.3]

ISSUE: How should the Low Bandwidth network be partitioned?

RATIONALE: This issue is discussed in more detail in paragraph 10.1.3.1.1 of Appendix A and rationale supporting this is given in paragraph 5.1.3.1 of this document.

4.1.1.4 Release Consent [9.2.2.1.4]

ISSUE: How should the Release Consent function be partitioned?

RATIONALE: The guidance given for this issue results from addressing the more detailed issues discussed in the paragraphs of 10.1.4.1 of Appendix A. Rationale supporting these more detailed issues is given in the paragraphs 5.1.4.1 through 5.1.4.3 of this document.

4.1.1.5 Interlock [9.2.2.1.5]

ISSUE: How should the interlock function be partitioned?

RATIONALE: This issue is discussed in more detail in paragraph 10.1.4.2.1 of Appendix A and rationale supporting this is given in paragraph 5.1.4.4 of this document.

4.1.1.6 Structure Ground [9.2.2.1.6]

ISSUE: How should the Structure Ground function be partitioned?

RATIONALE: This issue is discussed in more detail in paragraph 10.1.4.4 of Appendix A and rationale supporting this is given in paragraph 5.1.4.8 of this document.

4.1.1.7 Address Discretes [9.2.2.1.7]

ISSUE: How should the address determination function be partitioned?

RATIONALE: The guidance given for this issue results from addressing the more detailed issues discussed in paragraph 10.1.4.3.1 and 10.1.4.3.2 of Appendix A. Rationale supporting these issues is given in paragraphs 5.1.4.6 and 5.1.4.7 of this document.

4.1.1.8 Power [9.2.2.1.8]

ISSUE: How should the power control function be partitioned?

RATIONALE: The guidance given for this issue results from addressing the more detailed issues discussed in the paragraphs of 10.1.5 in Appendix A. Rationale supporting these more detailed issues is given in paragraphs 5.1.5.1 through 5.1.5.9 of this document.

4.1.1.9 Store Critical State [9.2.2.2]

ISSUE: Partitioning of store critical state function.

RATIONALE: The following paragraphs address each of the three AIS subfunctions of the store critical state function in turn:

a. State Command This is associated with transmitting data to the store using the MIL-STD-1553 stores bus and controlling the Release Consent signal to the store. The control of the stores bus should be central as discussed in paragraph 9.2.2.1.2 of Appendix A and the state command subfunction would best be performed locally to the MUX bus control function therefore this should also be performed centrally. The control of Release Consent is also best performed centrally although the physical switching of this signal is best distributed as discussed in paragraph 9.2.2.1.4 of Appendix A.

b. State Monitor This is associated with receiving data from the store using the MIL-STD-1553 stores bus. The control of this bus should be central as discussed in paragraph 9.2.2.1.2 of Appendix A and the state monitor subfunction would best be performed locally to the MUX bus, therefore this subfunction should also be performed centrally.

c. Power Supply management The power required by a store is dependent on the store type and the store state which is required. This is therefore directly related to the state command and state monitor subfunctions discussed above and so the control of the power to a store would best be performed with these subfunctions, that is centrally. The actual physical switching of the power may be distributed, as discussed in paragraph 9.2.2.1.8 of Appendix A.

AVS Implementation: All AIS aspects of store state control are performed within the SMS processor in the central Process Control Equipment apart from, the physical switching of the power and Release Consent which was distributed in the Store Station Equipments. This was considered the most logical position for this function as the SMS processor has access to information of all inputs that affect this function.

4.1.1.10 Data to Store [9.2.2.3]

ISSUE: Partitioning of Data to Store function.

RATIONALE: The following paragraphs address each of the three AIS subfunctions of the Data to Store function in turn:

a. Unique to Store formatting This is concerned with ensuring the data transmitted to the store, on the MIL-STD-1553 stores bus, is in the correct format. This subfunction is therefore closely related to the store bus control function and would best be performed locally to this bus control function. As discussed in paragraph 9.2.2.1.2 of Appendix A, the bus control function should be performed centrally, therefore the unique to store formatting subfunction would also best be controlled centrally.

b. Recomputation to store axes This subfunction is also concerned with ensuring the data transmitted to the store is in the correct format, in this case referenced to the correct axes system as required by the store. This should therefore be treated in the same way as the unique to store formatting and should be provided centrally and locally to the stores bus control function.

c. Interface with Store Management of the store interface signals should be positioned such that this subfunction has access to all the information which could affect this store interface, such as inputs from other avionics equipment, and safety critical switches such as master arm and the trigger. This requirement is best met by a central processor. The partitioning of the actual control circuitry for the individual signals of the store interface is discussed in the paragraph 9.2.2.1 in Appendix A.

AVS Implementation: The AIS aspects of the data to store function within the AVS is performed in the central Process Control Equipment (PCE). The Avionics Processor performs much of the Unique to store formatting with the SMS Processor performing the management of the store interface. No recomputation to store axes was performed as none of the stores in the AVS inventory required this. This arrangement worked well as the PCE has access to all the input information which could affect or change the data to the stores.

4.1.1.11 Data from Store [9.2.2.4]

ISSUE: Partitioning of Data from Store function.

RATIONALE: The following paragraph address each of the three AIS subfunctions of the Data from Store function in turn:

a. Unique to User formatting This is concerned with ensuring that the data received from the store is in the correct format before it is transferred to other avionics equipment. This subfunction is therefore closely related to the stores bus controller function and would best be performed locally to this. As discussed in paragraph 9.2.2.1.2 of Appendix A, the bus control function should be performed centrally therefore the Unique to User formatting subfunction should also be performed centrally.

b. Recomputation to User axes This subfunction is also concerned with ensuring the data received from the store is in the correct format to be transferred to other avionic equipments. In this case the particular area of concern is to ensure the data is referenced to the correct axes system. This subfunction is therefore similar to the Unique to User formatting and should be performed in the same place, that is centrally.

c. Interface with Avionics Most of the actions resulting from data being received from the store are concerned with passing this information on, in whatever form, to other avionics equipment. The primary method of transferring this information to other avionics equipment is by using a digital data bus. The AIS will contain only a single interface (or possibly two interfaces) to this avionics digital data bus, as the total number of interfaces to this bus is probably limited. In which case this interface with Avionics will be provided in a central unit.

AVS Implementation: The AIS aspects of the data from store function are all performed in the central Process Control Equipment (PCE). The Avionics Processor performs most of the Unique to User formatting and controlling the interface with the MIL-STD-1553 Avionics bus. The SMS Processor controls the transfer of data from the Bus Controller processor to the Avionics Processor. No recomputation to user axes is performed as none of the stores in the AVS loadout require it. This arrangement worked well as all elements concerned in this function are performed within the same unit thus simplifying the overall control of this function.

4.1.1.12 Store Selection [9.2.2.5]

ISSUE: Partitioning of Store Selection function.

RATIONALE: The following paragraphs address each of the three AIS subfunctions of the Store Selection function in turn:

a. Station Determination The determination of which stations should have stores selected is dependent on many different factors including store types fitted to the aircraft and their locations, the actual state of the store, and aircrew selections. As all this varied information has to be available before a valid decision can be made, then this function is best performed in a central unit which has access to all the information that is required.

b. Store Initialization Management The initialization requirements are at least in part specific to store type and therefore the initialization sequence for a particular station is dependent on the store type fitted to that station. The information defining store initialization sequences would best be stored centrally rather than having to be duplicated at each store station. Similarly the management function requiring this information would best be located centrally.

c. Release Package Data Retention The information for release packages would be transferred to the AIS using a digital data link from other avionic equipment. This information would therefore best be retained locally to the interface to this avionics data link which will be in a central unit.

AVS Implementation: The AIS aspects of the store selection function are all performed in the SMS Processor within the Process Control Equipment. This arrangement works well as the SMS Processor has easy access to all the information required to perform this function.

4.1.1.13 Store Fuzing [9.2.2.6]

ISSUE: Partitioning of Store Fuzing function.

RATIONALE: The following paragraphs address each of the two AIS subfunctions of Store Fuzing.

a. Fuzing Management The decision of which stores to Fuze and how to fuze them is dependent on store type, stores selected and inputs from the aircrew. This means that the best position for this decision to be made, and the management of implementing the actions decided upon, is in a central unit that has access to all the information required. The signals which

control the arming solenoids are considered safety critical and as such the physical switching of these signals should be partitioned according to the guidance for safety critical signals given in paragraph 10.2.1 of Appendix A.

b. Fuzing Times Computation These computations are dependent on store type, aircraft data such as height, velocity and target data. The best location for performing this computation, and controlling the transfer of the result to the store, is in a central unit that has access to all the information required.

AVS Implementation: The management of the fuzing demands are performed by the SMS Processor in the Process Control Equipment, using the MIL-STD-1553 Armaments bus to transmit commands to the Store Station Equipments to control the safety critical switches for the Arm Mode outputs. This arrangement worked well as the SMS Processor had access to all the information required to decide which signals to activate and when they should be activated. None of the stores fitted to the AVS required Fuzing Times therefore the AVS did not perform any computations associated with this.

4.1.1.14 Store Release [9.2.2.7]

ISSUE: Partitioning of Store Release Function.

RATIONALE: The following address each of the seven AIS subfunctions of Store Release in turn:

a. Suspension Equipment Management The decision of which suspension Equipment signals to activate and when to activate them is dependent on many different factors including equipment type, store type, release sequence, and aircrew demands. This means that the best position for this decision making to be performed is in a central unit with access to all the relevant information. The position of the physical switches used to activate the suspension equipment signals may be distributed but these should be controlled from the central decision making unit.

b. Weapon Bay Management This is similar to suspension Equipment Management where the physical switches to activate the Weapon Bay signals may be distributed but the decision making process of when they should be activated should be performed centrally.

c. Release Management The decisions concerned with if and when a release should take place are dependent on many different factors therefore this should be located in a central unit with access to all the relevant information.

d. Release Timing The decisions concerned with controlling release timing are dependent on many factors such as store type and position and aircrew selections. These decisions are therefore best performed in a central unit with access to all the relevant information.

e. Release Sequence Determination The decisions concerned with determining the release sequence is dependent on many factors such as store type, position and status, aircrew selection and aircraft balance. These decisions are therefore best performed in a central unit with access to all the relevant information.

f. Balance Management The decisions concerned with ensuring aircraft balance is maintained during release sequences and determining how release sequences should be modified to maintain aircraft balance is dependent on many factors including store type, position and status, Release sequence and Release Timings. These decisions are therefore best performed in a central unit with access to all the relevant information.

g. Engine Control Assistance The decisions associated with engine control assistance are closely associated with release timing and so should be performed in the same place as the release timing function, that is in a central unit.

AVS Implementation: All the above functions relevant to the AVS are performed centrally within the Process Control Equipment although the physical switches for the relevant signals are distributed. All the decision making is performed in the SMS Processor which has access to all the relevant information. This simplifies the overall control of this information as it is all contained in one physical unit and primarily controlled by a single processor. The AVS is not required to perform Engine Control Assistance or Weapon Bay management.

4.1.1.15 Store Jettison [9.2.2.8]

ISSUE: Partitioning of Store Jettison function.

RATIONALE: The following paragraphs address each of the three AIS subfunctions of Store Jettison in turn:

a. Selective Jettison This is a specialized form of Store Release and therefore is best performed in the same manner as Store Release, that is all the control should be in a central unit although the signal switching may be distributed.

b. Emergency Jettison This is similar to Selective Jettison and therefore should be provided centrally although signal switching may be distributed.

c. Store Safe Verification This is closely associated with Fuzing Management discussed in 4.1.1.13.a. and should be performed in the same location, that is in a central unit although the signal switching may be distributed.

AVS Implementation: These AIS aspects of Store Jettison are all performed in the Process Control Equipment (PCE). Selective Jettison control is performed by the SMS Processor as is the Store Safe Verification. Emergency Jettison Control is also performed by the SMS Processor with a separate independent back up hardware Emergency Jettison controller also located in the PCE. This provides the higher assurance that is required for Emergency Jettison to be performed when demanded. This arrangement worked well as it minimized the additional hardware and software required to provide the Store Jettison function as maximum use could be made of hardware and software provided for normal release.

4.1.1.16 Inventory [9.2.2.9]

ISSUE: Partitioning of Inventory function.

RATIONALE: The following paragraphs address the two AIS subfunctions of Inventory in turn.

a. Inventory Confirmation This function requires access to the defined Inventory Load, Store-on-Station information, Store identification information from MIL-STD-1760 stores, and identification information, if any, from existing stores. This function is therefore best performed by a central unit with access to all this information.

b. Inventory Update This function requires secure storage of inventory data and access to information from the Store Selection, Store Release and Store Jettison functions all of which should be provided centrally. This function is therefore best performed by a central unit with

access to all the relevant information and provides a single secure data base for inventory information.

AVS Implementation: The limited loadout of the AVS and the restricted weapon types that can be fitted allows the AVS to create the inventory from store on station information and store identification information rather than having to confirm inventory data input by other means. This inventory creation and subsequent inventory update is performed by the SMS Processor in the Process Control Equipment (PCE). This arrangement worked well as this processor had easy access to all the relevant information.

4.1.1.17 Crew Interface [9.2.2.10]

ISSUE: Partitioning of Crew Interface function.

RATIONALE: The switches associated with the Critical Controls Interface, the only AIS subfunction of Crew Interfaces, need to be positioned to enable easy selection by the relevant crew member. These switches are used as inputs to many of the other centrally controlled functions, such as Store Critical State, Store Release and Store Jettison. These switches are therefore best monitored centrally in the unit performing these other functions.

AVS Implementation: The switches for the Critical Controls Interface are provided alongside the Multi-Function Display which simulates the crew interface for the AVS. The monitoring of these switches is performed in the PCE. This was considered the best location for these monitors as they form a key part of many of the functions performed by the PCE.

4.1.1.18 Nuclear Controls [9.2.2.11]

ISSUE: Partitioning of Nuclear Controls function.

RATIONALE: The following paragraphs address each of the AIS subfunctions of the Nuclear Control function in turn.

a. S&RE Management This is similar to the Suspension Equipment Management discussed in 4.1.1.14 a. with the addition of the control for the in flight reversible lock and should be treated in the same manner, that is the decision making process of nuclear S&RE management should be performed in a central unit with access to all the relevant information although the physical switches used to activate the S&RE signals may be distributed.

b. Crew Controls This is similar to the Critical Controls Interface discussed in 4.1.1.16 and should be treated in the same manner, that is the switches need to be distributed to allow easy access by the relevant crew member with the monitoring being performed in a central unit.

c. Crew Displays This is similar to the Crew Controls above with the actual display being distributed to allow monitoring by the relevant crew member but the control of the display should be from a central unit.

4.1.1.19 Memory Expansion Provision [9.2.2.12.1]

ISSUE: Where should expansion capabilities be provided within the AIS?

RATIONALE: The most likely reason for change to the AIS is to enable the AIS to control additional stores or the same stores at different or new store locations. This should only affect the software for the central system control and management processors. Additional spare memory

should be provided for these processors to enable the extra software required to control these additional stores, to be easily incorporated without having to update the hardware.

4.1.1.20 Processing Expansion Provision [9.2.2.12.2]

ISSUE: Where should spare processing capacity be provided within the AIS?

RATIONALE: The most likely reason for change to the AIS is to enable the AIS to control additional stores. These new stores may require additional data reformatting or computations performed on data to or from the store. Additional processing capacity may be required to perform this work but this should only affect the central system control and management processors. Thus, spare processing capacity should be provided for these central processors to enable additional stores to be controlled by the system without having to update the hardware.

4.1.1.21 Interfaces Expansion Provision [9.2.2.12.3]

ISSUE: Where should additional store interfaces be provided within the AIS?

RATIONALE: The rationale was provided in the Appendix A guidance.

4.1.1.22 Reliability [9.2.2.13]

ISSUE: Partitioning of Reliability.

RATIONALE: Some rationale was provided in the Appendix A guidance and more detailed rationale is given in section 3 of this document.

4.1.1.23 Maintainability [9.2.2.14]

ISSUE: Partitioning of Maintainability.

RATIONALE: More detail on Built in Test circuitry is given in paragraph 10.2.4 of Appendix A. Once a failure has been detected then the relevant unit will be identified as faulty. The faulty unit will then be exchanged at the 1st maintenance level (organizational) and sent to the 2nd maintenance level (intermediate). At the 2nd maintenance level there must be some method of determining the reason for the particular unit being identified as faulty. To allow for this each unit should as a minimum contain some form of non-volatile storage facility to record the information obtained from the system Built in Test procedures which results in a particular unit being identified as faulty.

4.1.1.24 Volume/Mass [9.2.2.15] No guidance was given.

4.1.1.25 Environment [9.2.2.16] No guidance was given.

4.1.1.26 Power Dissipation [9.2.2.17.1] No guidance was given.

4.1.1.27 Power Consumption [9.2.2.17.2]

ISSUE: Effects of Power Consumption on partitioning.

RATIONALE: The rationale was provided in the Appendix A guidance.

4.1.2 Partitioning of Internal Functions [9.2.3]

ISSUE: How should the AIS system designer implement internal functions?

RATIONALE: The rationale was provided in the Appendix A guidance.

4.2 AIS Internal Interfaces [9.3]

ISSUE: Specification of internal interfaces.

RATIONALE: This is covered in the rationale for the more detailed aspects of internal interfaces given in paragraphs 4.2.1 through 4.2.5.

4.2.1 Connectors and Cabling [9.3.1]

ISSUE: How should the AIS system designer specify cables and connectors?

RATIONALE: This issue is considered in more detail in section 10 of Appendix A and further rationale supporting the guidance given is to be found in the following paragraphs of this document: paragraphs 5.1.1.6 and 5.1.1.7 for High Bandwidth signals; paragraphs 5.1.3.6 and 5.1.3.7 for Low Bandwidth signals; and paragraphs 5.1.5.5 and 5.1.5.6 for power.

4.2.2 Power Interfaces [9.3.2]

ISSUE: How should the AIS system designer specify power interfaces?

RATIONALE: The guidance given for this issue results from addressing the more detailed issues discussed in the paragraphs of 10.1.5 of Appendix A. Rationale supporting these more detailed issues is given in the paragraphs 5.1.5 of this document.

4.2.3 Digital Interfaces [9.3.3]

ISSUE: Specify the use of digital transmission.

RATIONALE: The guidance given for this issue results partly from addressing the more detailed issues discussed in paragraph 10.1.2 of Appendix A. Rationale supporting these more detailed issues are given in paragraphs 5.1.2 of this document. Figure 4.1 shows examples of different architectures for digital transfer standards that can be used within the AIS. Example A shows the recommended architecture. Figure 4.2 illustrates the different methods of partitioning a bus, that is Horizontal partitioning and Vertical partitioning.

4.2.4 Discrete Interfaces [9.3.4]

ISSUE: Specify the use of discrete signals.

RATIONALE: The use of discrete signals associated with the Release Consent output is discussed in detail in paragraph 10.1.4.1.3 of Appendix A and in paragraph 5.1.4.3 of this document. Similar rationale applies to all other safety critical signals within the AIS. Figure 4.3 shows a typical arrangement for discrete interlocks required between a central Process Control Equipment (PCE) and a remote Store Station Equipment (SSE).

4 2.5 Analog Signals [9.3.5]

ISSUE: Specify use of internal analog signals.

RATIONALE: The guidance given for this issue results from addressing the more detailed issues discussed in paragraphs 10.1.1 and 10.1.3 of Appendix A. Rationale supporting these more detailed issues is given in paragraphs 5.1.1 and 5.1.3 of this document.

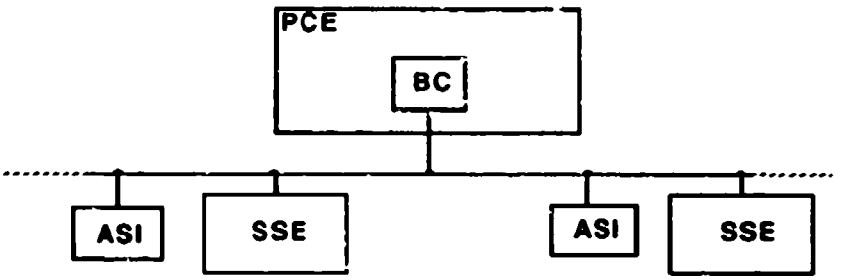

a. Common MIL-STD-1553 Bus

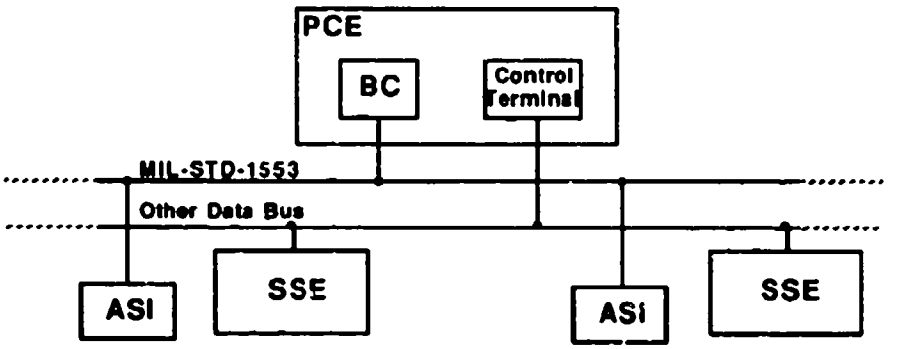

b. Use of other data bus within AIS

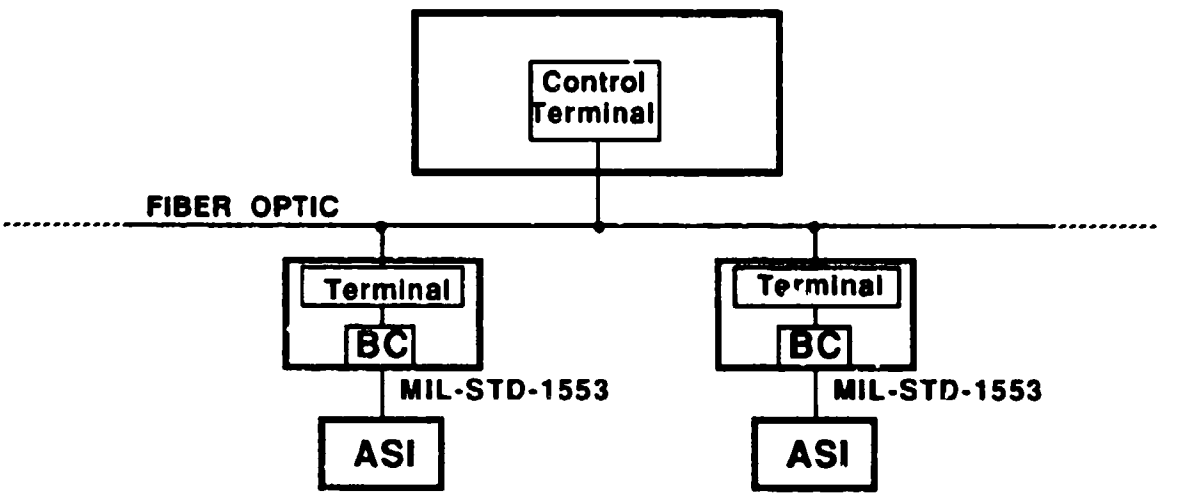

c. Use of Fiber Optic Bus within AIS with local MIL-STD-1553 Buses

FIGURE 4.1 Different Digital Transfer Standards for AIS

4.3 System Design Documentation [9.4]

ISSUE: How should MIL-STD-490 be used to record the system design?

RATIONALE: The rationale was provided in the Appendix A guidance.

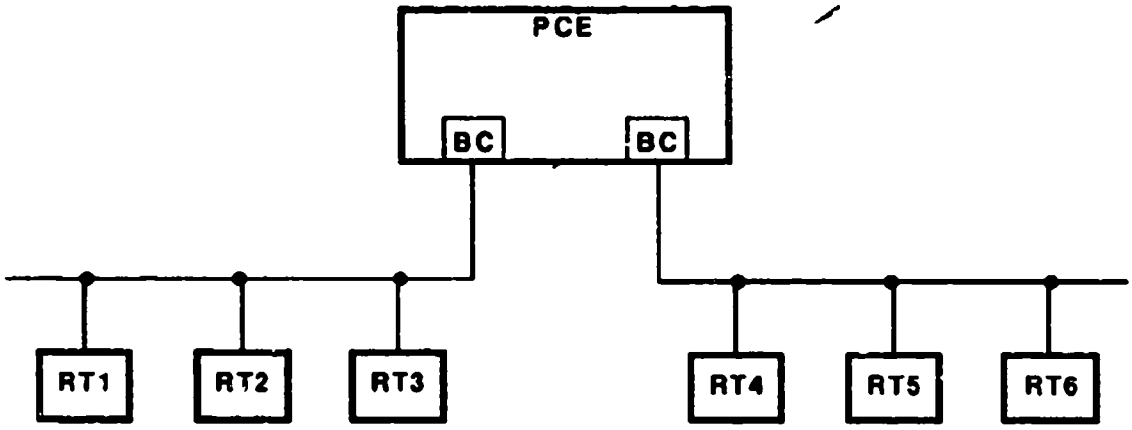

a. Horizontal partitioning

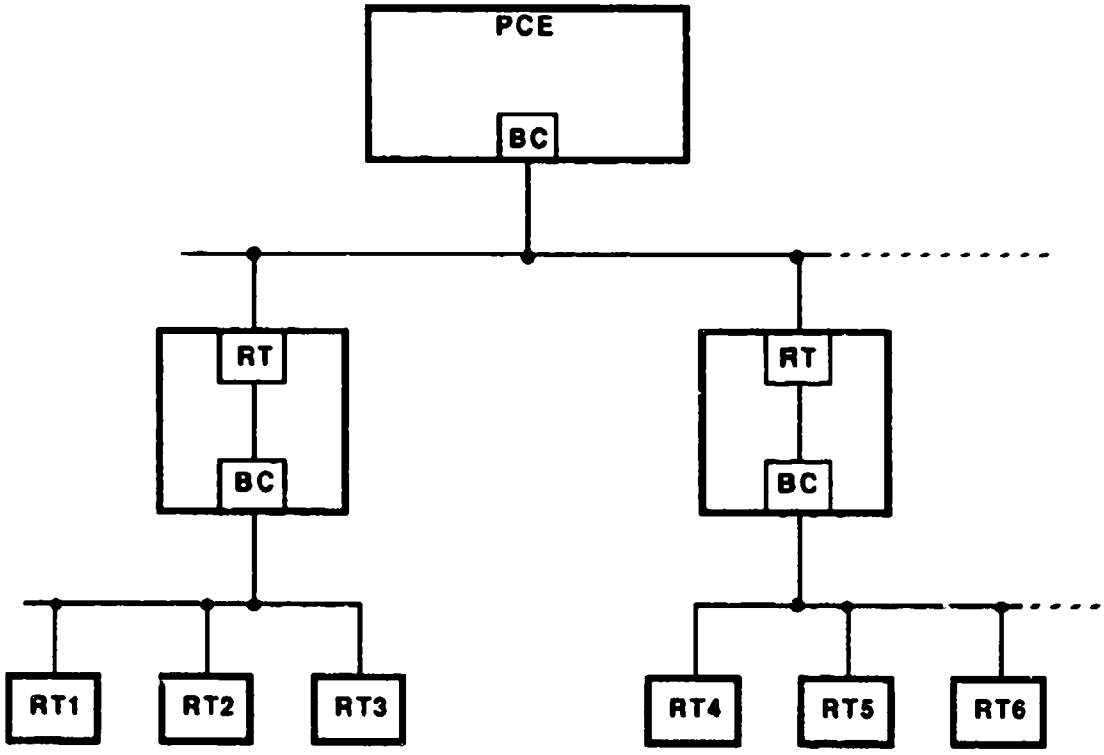

b. Vertical partitioning

FIGURE 4.2 Partitioning of Buses

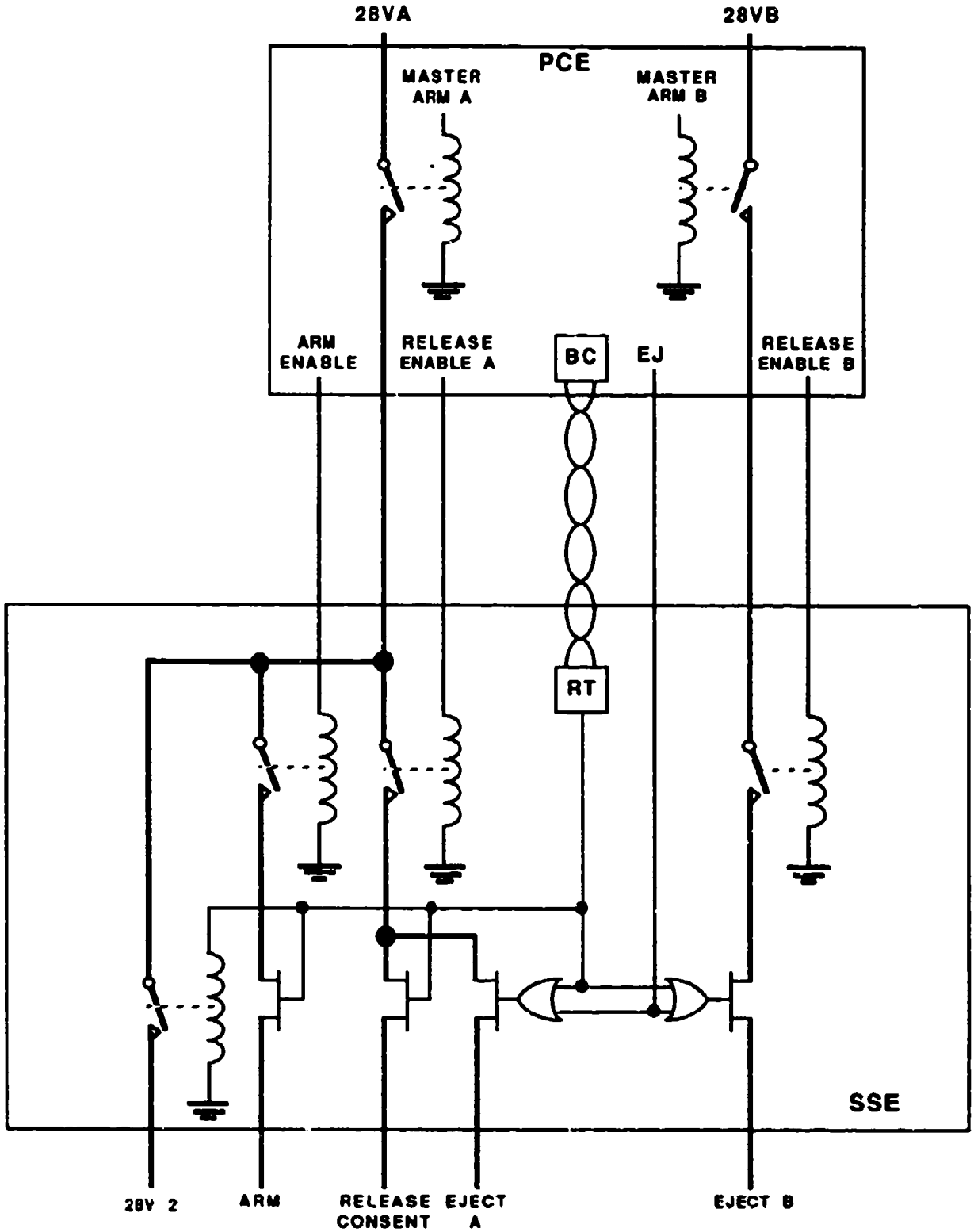

FIGURE 4.3 Direct Discrete Safety Interlocks

5. RATIONALE FOR APPENDIX A SECTION 10

Paragraphs 5.1 and 5.2 of this section provide rationale derived from the AVS and other sources to support the guidance given in paragraphs 10.1 and 10.2 of Appendix A. Issue statements and subjects have been summarized. Where rationale was supplied in the guidance text, and further provision considered superfluous, then extra rationale is not supplied.

5.1 MIL-STD-1760A Implementation Guidance

5.1.1 High Bandwidth Issues

5.1.1.1 Centralized or Distributed [10.1.1.1.1]

ISSUE: Should the High Bandwidth Network be centralized or distributed?

RATIONALE: The issue of whether the High Bandwidth Network should be centralized or distributed cannot be divorced from some of the other issues to be discussed. As stated in the guidance there are several major factors to consider before deciding on the topology to be used. These are discussed in more detail below.

a. VSWR The VSWR is affected among other things, by the technology to be used, the type of switch elements to be employed and the connectors to be used. Use of FDM technology will make it easier to meet the VSWR figures for the type A signals as the High Bandwidth lines from each ASI can be terminated locally at the associated Store Station Equipments before the signals are encoded onto the FDM network. If switch technology is used then the whole network has to be considered, as any discontinuity in the impedance of the signal path will affect the overall VSWR seen at a particular ASI. A discontinuity in the impedance of a signal path will be caused by every switch element and every connector in the signal path. This will affect the choice of which switch elements and connector types to use for these High Bandwidth signals and the total numbers of these that can be used in any signal path. This is of particular concern for the higher frequency type B signals. If a centralized network is used then specialized multi-pole RF relays can be employed which will greatly reduce the number of switch elements and connectors in a signal path making it easier to ensure the VSWR characteristics of every signal path will meet the requirements of MIL-STD-1760.

b. Amount of Aircraft Wiring The amount of aircraft wiring required for the High Bandwidth Network is dependent on the following factors:

1. Technology to be used: Using FDM technology will greatly reduce the amount of aircraft wiring required to implement the High Bandwidth Network. Figure 5.1 shows the wiring required for a typical 5 pylon aircraft using FDM technology. However the cost of using FDM technology is high compared with relays and the large size of the circuitry in a store station equipment required to implement the FDM network has to be weighed against the saving in aircraft wiring which will be achieved.

2. Number of Network paths required: The minimum number of paths required by MIL-STD-1760 is three, that is one path for type B signals, one path for 50 ohm type A signals and one path for 75 ohm type A signals. MIL-STD-1760 however recommends that the aircraft provides 7 paths (one path for type B signals, three paths for 50 ohm type signals and three paths for 75 ohm type A signals), and particular aircraft implementation may require more interconnection paths to be provided.

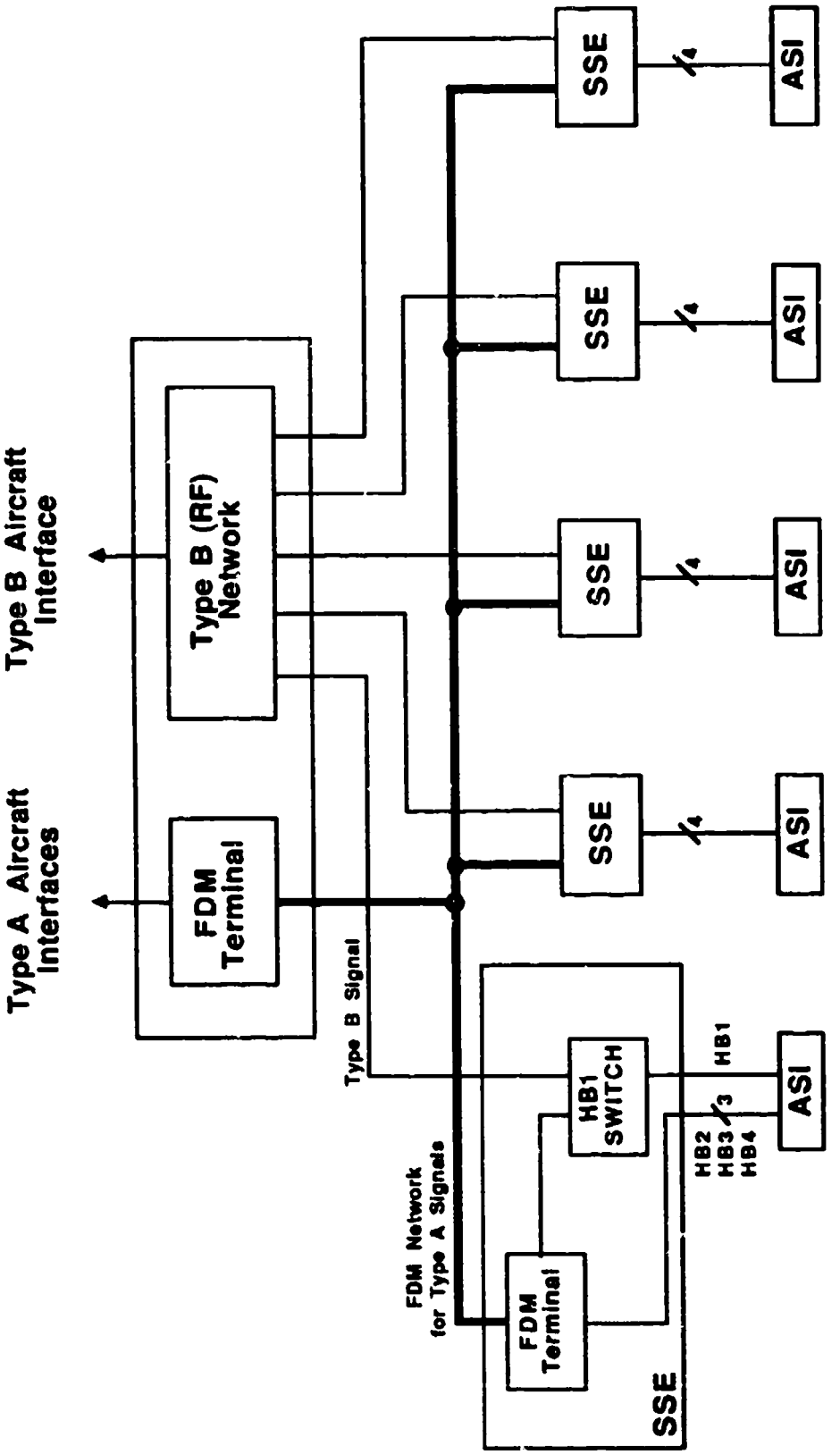

FIGURE 5.1 Typical Wiring Required for FDM Approach

3. Number and Position of ASI: This will vary greatly between aircraft. For a small fighter type aircraft there may be a total of eight ASI, three on each wing and two on the Fuselage. For a large bomber type aircraft then many more ASI will be provided many of which may be in Weapon Bays.

4. Class of Interface: A full Class I interface requires four High Bandwidth signals at an ASI whereas the class II interface has the requirement for HB2 and HB4 deleted and so only requires two High Bandwidth signals at an ASI.

c. Broken Networks The easiest way to implement a distributed system is to "daisy chain" the High Bandwidth network paths from one store station equipment (SSE) to the next along the wing or down the fuselage. If one of these SSE can be removed then the network is broken and those SSE further down the chain are also disconnected from the High Bandwidth network. This can be overcome by adding non-removable junction boxes in the aircraft wiring to "T" off the High Bandwidth signals for a removable SSE but this greatly complicates the aircraft wiring. A centralized system does not have this problem as the wiring from all ASI goes direct to a central Equipment.

AVS Implementation: The AVS implements a centralized system where the four High Bandwidth signals from each ASI are wired directly to a centrally located Signal Network Equipment (SNE). The SNE implements 10 interconnection paths, one path for type B signals, five paths for 50 ohm type A signals and four paths for 75 ohm type A signals. The AVS worked well, performing all the functions required of the High Bandwidth network simply and easily.

Test and Evaluation: The AVS Evaluation Process Report and Summary (Document Number 182/70/57), indicates that those parts of the AVS associated with High Bandwidth Networking could be used for an on-aircraft AEIS. The MIL-STD-1760 Test Process Report 2 (Document Number 182/70/24), shows that the AVS met all the requirements of MIL-STD-1760 associated with High Bandwidth Signals. However, during the testing associated with this it was found that a high level of crosstalk existed between the different High Bandwidth Signal lines. There are no requirements in MIL-STD-1760 concerning crosstalk or interference; therefore, the AVS is compliant with the standard, however the level of interference seen may cause problems in an on-aircraft AEIS. The MIL-STD-1760 Evaluation Process Report (Document Number 182/70/12), indicates that all the aspects of the High Bandwidth Requirements evaluated were acceptable for a flight standard AEIS.

5.1.1.2 Switched or FDM Technology [10.1.1.1.2]

ISSUE: Should the High Bandwidth Network use switched or FDM Technology?

RATIONALE: The rationale for this is provided in the Appendix A guidance and in paragraph 5.1.1.1 above and no further rationale is necessary.

5.1.1.3 Shared usage [10.1.1.1.3]

ISSUE: Could the High Bandwidth Network be used for other functions?

RATIONALE: Certain existing stores, such as Maverick, require the transfer of analog signals between the store and aircraft systems. As MIL-STD-1760 requires that networks be provided to transfer High Bandwidth signals from ASI to aircraft then these MIL-STD-1760 Networks may be used to transfer the analog signals from the existing non 1760 stores. Before this is done the designer must consider the following areas:

a. Network terminations The MIL-STD-1760 High Bandwidth network may provide matched impedance terminations for those signals not selected for transfer over the High Bandwidth network. If signals from existing stores are to be routed onto the High Bandwidth network they may have to drive into these matched terminations, in which case the designer must be sure that the store will not be affected or damaged if this happens.

b. VSWR If signals from existing non 1760 stores are to be routed onto the High Bandwidth network additional switching elements may have to be introduced. As discussed in paragraph 5.1.1.1 above any additional switch elements will affect the VSWR of the network and this will have to be allowed for when ensuring that the High Bandwidth network meets the VSWR requirements of MIL-STD-1760. The benefits of being able to use the High Bandwidth network for existing stores are: reduced aircraft wiring and reduced circuitry within equipments.

Test and Evaluation: The MIL-STD-1760 Evaluation Process addressed this question in Report 1, Issue 13 (Document Number 182/70/12), and concluded that the High Bandwidth network could be used for non 1760 signals.

5.1.1.4 Switching elements for Type B signals [10.1.1.2.1]

ISSUE: What type of switching elements should be used for type B signals?

RATIONALE: The rationale for this is provided in the Appendix A guidance and in paragraph 5.1.1.1 above and no further rationale is necessary.

5.1.1.5 Switching elements for Type A signals [10.1.1.2.2]

ISSUE: What type of switching elements should be used for Type A signals?

RATIONALE: As the frequency for Type A signals is limited to a maximum of 20 MHz it becomes easier to meet the VSWR and attenuation requirements of MIL-STD-1760 compared with the Type B signals. The transfer characteristics for MIL-R-39016 signal relays are acceptable to be used in the High Bandwidth network for transferring Type A signals and these relays are relatively small and inexpensive. The characteristics of semiconductor switches would not be acceptable to allow the use of these switches in a High Bandwidth network as they would introduce excessive attenuation or will be excessively large.

5.1.1.6 Connectors [10.1.1.2.3]

ISSUE: What type of connectors should be used for High Bandwidth signals?

RATIONALE: As discussed in paragraph 5.1.1.1 the connectors used in a signal path will cause a discontinuity of the impedance of the path and thus affect the overall VSWR seen at an ASI. This effect is particularly important for the Type B signals which can have frequency components as high as 1.6 GHz. For these signals, connectors or contacts should be used which have a characteristic impedance of 50 ohms and will not introduce significant discontinuity of impedance. For Type A signals the maximum frequency component is 20 MHz which means the effects of impedance discontinuities are not as great as for the Type B signals, but they can still have significant effects on the VSWR of the Type A signals. The connectors or contacts used for all the High Bandwidth signals should ensure continued overall screening of the signal lines to reduce interference on other signal lines which could be caused by the high frequency signals on the High Bandwidth lines. Figure 5.2 summarizes the recommendations for what connectors or contacts to use for the High Bandwidth signals.

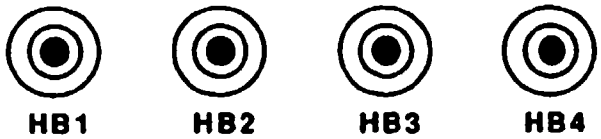

Separate MIL-C-39012 or similar Connections for each Signal

a. Preferred

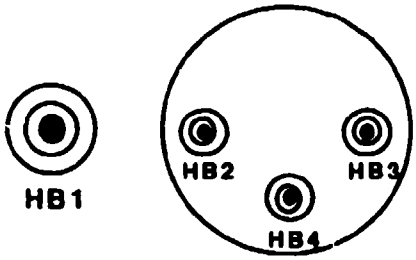

Separate MIL-C-39012 connector for HB1 Coaxial contacts in MIL-C-38999 Shell for HB2, HB3 and HB4

b. Acceptable

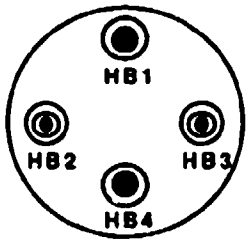

Coaxial contacts in MIL-C-38999 Shell for HB1, HB2, HB3 and HB4

c. Non-preferred

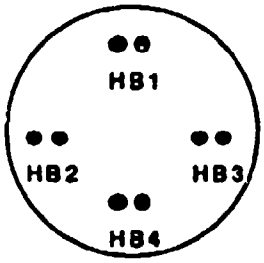

Coaxial contacts for signal and screen in MIL-C-38999 Shell for HB1, HB2, HB3 and HB4

d. Unacceptable

FIGURE 5.2 High Bandwidth Signal Connectors

5.1.1.7 Cabling [10.1.1.2.4]

ISSUE: What type of cables should be used for High Bandwidth signals?

RATIONALE: The rationale is provided in the Appendix A guidance and also in Paragraph 6 of MIL-STD-1760 and no further rationale is necessary.

5.1.2 MIL-STD-1553 Issues

5.1.2.1 Local or Aircraft Bus [10.1.2.1.1]

ISSUE: Should the ASI bus be a local bus or part of a common aircraft bus?

RATIONALE: The rationale was provided in the Appendix A guidance and no further rationale is necessary.

AVS Implementation: The AVS implements a common aircraft bus for all the ASI provided. A local bus is generated within the Carriage Store Equipment (CSE) to provide a separate MIL-STD-1553 bus to the CSSI. The use of a common bus worked well and did not cause any problems. The experience with the CSE shows that to provide separate local buses greatly adds to the complexity of the control software and also the circuitry required to implement a separate, albeit simple, bus controller in the CSE was very significant and would increase the size of electronics required in a store station equipment by 30-40%.

5.1.2.2 Single or Multiple Buses [10.1.2.1.2]

ISSUE: Should single or multiple buses be used for the stores bus?

RATIONALE: The basic level of activity on the stores bus, in terms of message transfers, is relatively low with bursts of greater activity occurring when a change of store state is being demanded or when store releases are taking place. Increasing the number of Remote Terminals on this bus will increase the basic level of activity but this will still remain relatively low. The relative size of the periods of high activity for store state changes will not increase, if additional remote terminals are added, as this will not affect the basic philosophy that only requires the release of one or possibly two stores simultaneously. All other store state changes can be time multiplexed to spread, and so restrict, the level of activity. The electrical loading on the bus will be affected by the number of remote terminals on the bus. However, there should be enough tolerance in the voltage levels specified by MIL-STD-1553 to ensure a minimum voltage of 1.4 V p-p at the ASI as specified in MIL-STD-1760 especially if low loss cable, such as Trompeter TWC-78-2, is used. The minimum output voltage for a transmitter allowed by MIL-STD-1553B is 18V p-p (when driving into a 70 ohm load). For a bus with 30 Remote Terminals presenting the maximum load impedance then a typical voltage of 3.0V p-p would be expected at the ASI. With a single shorted stub, as allowed for in MIL-STD-1553, this would reduce the voltages at the ASI to 2.4V p-p typically. This still allows a large margin for further voltage drops due to the attenuation in long lengths of cable.

AVS Implementation: The AVS implements an armaments bus which controls 5 ASIs and can have a total of 12 Remote Terminals connected. The total length of wiring between Transmitter and ASI can be 18m. The maximum bus activity was measured to be 101.5 transmissions per second which equates to less than 7% loading. The typical voltage seen at an ASI was 4.1V p-p which is well above the minimum allowed.

Test and Evaluation: The AVS Evaluation process found that all aspects of the MIL-STD-1553 bus, that were analyzed, were representative of an AEIS for a small aircraft (see Document Number 182/70/57). Report Number 22 (Document Number 182/70/45), addresses particular aspects of MIL-STD-1553 bus including issue 4 which measured the bus loading figures quoted above. The electrical loading aspects of the MIL-STD-1553 bus in the AVS was addressed in both the MIL-STD-1760 Test Process, see Report 3 (Document Number 182/70/49), and the MIL-STD-1760 Evaluation Process Report 3 (Document Number 182/70/28). The typical ASI voltage figures quoted above were derived from these documents.

5.1.2.3 Shared Use [10.1.2.1.3]

ISSUE: Should the stores bus be combined with other aircraft buses?

RATIONALE: The stores bus has a requirement to transfer safety critical data as specified in MIL-STD-1760. The remote units within the AIS, particularly Store Station Equipment, require safety critical information to be passed to them. This information could be arranged in the same form as that specified for stores in MIL-STD-1760. If this were done then it would be a simple matter to use the same MIL-STD-1553 bus to transfer safety critical and other data to both stores and remote AIS equipments. This has the advantage that only one safety critical bus controller is required within the AIS thus saving space and reducing costs. MIL-STD-1760 defines particular formats and particular subaddress and word positions for safety critical data. If non-AIS equipments were on the same bus as MIL-STD-1760 stores then these equipments may use these particular word positions and subaddresses for non-critical information. If this happens then the design of a safety critical bus controller, that meets the specified performance in MIL-STD-1760, becomes very complex if not impossible. For this reason it is undesirable to allow non-AIS equipment to use the same bus as MIL-STD-1760 stores.

AVS Implementation: The AVS uses the same bus, Armaments bus, to control both stores and equipments within the system. The data formats and positions for the AVS equipments were chosen to be similar to those specified in MIL-STD-1760. This simplified the control software as the same subroutines could be used for both stores and AVS equipments especially in the safety critical control area. Savings were also made in the hardware, as only one bus controller was required, and aircraft wiring was reduced, as only one bus was required.

5.1.2.4 Linear Bus or Other Topology [10.1.2.1.4]

ISSUE: What topology should be used for the stores bus?

RATIONALE: The purpose of having a dual redundant bus is that if one bus gets damaged then data can still be transferred on the other bus. To maximize the usefulness of this, the two buses should be physically separated to reduce the probability that a single area of damage can affect both buses. In many types of aircraft the physical construction of the wings, especially if they contain fuel tanks, means that there is only limited space for cable runs that are physically separated by more than a few inches. In these aircraft, if a linear bus is used, then the two buses would be physically close to each other for much of the wing length thus increasing the probability that a single area of battle damage could affect both buses. To overcome this a starred bus approach could be adopted such that the actual buses are restricted to the fuselage and are physically separated, such as one on the port side and one on the starboard side. Separate stubs are then taken from both these buses for each remote terminal position in the wings. This means that the wings will only contain stub wiring, albeit for both buses, so that at worst a single area of battle damage can only effect the stub wiring which would only disrupt particular terminals and not the bus as a whole.

5.1.2.5 Impact of Critical signals [10.1.2.2]

ISSUE: Impact of critical data transfer on the stores bus.

RATIONALE: The rationale for this issue is provided in the Appendix A guidance and also in paragraph 5.2.2.

5.1.2.6 Hardware/Software partitioning [10.1.2.3]

ISSUE: How should Bus Control function be partitioned?

RATIONALE: To be able to demonstrate that the critical probability associated with the mission store critical and authority words has been met there needs to be a clearly defined relationship

between these data words and the safety critical input demands (such as master arm and trigger). This relationship is best demonstrated by direct hardware interlocks similar to those suggested in paragraph 10.2.2 of Appendix A for the critical authority code generation. The intermessage gap requirements will affect the decision as to which areas of the bus controller should be implemented by dedicated hardware and which areas implemented by a processor. The shorter the intermessage gap the more attractive a dedicated hardware solution is for the areas associated with data transfer. At this level there are many alternatives and the best solution for a particular application must be determined by the designer having considered all the requirements.

5.1.2.7 Open circuit Stubs [10.1.2.4]

ISSUE: What effect does open circuit stubs have on the design of the stores bus?

RATIONALE: Once a store is released, any activity on the MIL-STD-1553 stores bus will cause radiations from the exposed umbilical connector. To prevent this from occurring, the stub to the ASI needs to be isolated following store release. Figure 10.9 in Appendix A shows three methods for achieving this. Methods A and B isolate the stub using relays within a local Store Station Equipment (SSE). The relay is controlled by commands received by the SSE over the MIL-STD-1553 bus. Method C isolates the ASI by controlling the stub with a separate Bus Controller. When the store has been released the bus controller associated with that store is disabled. The use of separate bus controllers is not recommended because of the additional circuitry required for this approach, see paragraph 5.1.2.1.

5.1.3 Low Bandwidth Issues

5.1.3.1 Centralized or distributed [10.1.3.1.1]

ISSUE: Should the Low Bandwidth network be centralized or distributed.

RATIONALE: There are three main areas to consider before deciding whether a centralized or distributed approach is most appropriate.

a. Amount of aircraft wiring This is primarily dependent on the number of network paths to be provided for Low Bandwidth signals. MIL-STD-1760 recommends a single network path although particular aircraft implementations may require more. From figure 10.10 in Appendix A it can be seen that a centralized approach requires more aircraft wiring then a distributed network for a single path. As more paths are added then a centralized network becomes more attractive in terms of amount of aircraft wiring.

b. Broken Networks This is similar to the problem described in paragraph 5.1.1.1 for High Bandwidth Networks where, if the network was implemented in a "daisy chain," then removal of an SSE will break the chain and disconnect other ASIs from the Low Bandwidth network. Adding junction boxes in the aircraft wiring, to "T" off the Low Bandwidth signal to removable SSE, is possible but this greatly complicates the aircraft wiring. A centralized network does not have this problem.

c. Similarity with High Bandwidth Network A neater design may result if all the analogue signals were switched in the same places. Provisions would already have been made for the High Bandwidth network to ensure interference to or from the High Bandwidth signals is minimized. The same type of provisions may be needed for the Low Bandwidth signals, so grouping the Low Bandwidth signal with the High Bandwidth signals would minimize the additional provisions necessary to reduce interference associated with the Low Bandwidth signal.

AVS Implementation: The Low Bandwidth network in the AVS is implemented centrally in the same place as the High Bandwidth networks, that is within the Signal Network Equipments. No particular problems were found with this implementation and the Low Bandwidth network performed as required.

Test and Evaluation: The AVS Evaluation Process, Report 26 (Document Number 182/70/48), found that the implementation of the Low Bandwidth network in the AVS could be used in an on-aircraft AEIS. The MIL-STD-1760 Test Process Report 4 (Document Number 182/70/25), found that the AVS implemented all the requirements of MIL-STD-1760 associated with Low Bandwidth signals.

5.1.3.2 Technology [10.1.3.1.2]

ISSUE: What technology should be used for the Low Bandwidth network?

RATIONALE: The use of FDM technology might be attractive if this is to be used for implementing the High Bandwidth Type A signal networking. However, MIL-STD-1760 requires that the Low Bandwidth signals are able to pass signals of +12V to -12V and frequencies between DC and 50 kHz. FDM networks are not able to transfer information about DC signals so this type of technology cannot be used for the Low Bandwidth Network.

5.1.3.3 Shared Usage [10.1.3.1.3]

ISSUE: Could the Low Bandwidth network be used for other functions?

RATIONALE: Certain existing stores, such as Sidewinder, require the transfer of audio signals between the store and aircraft systems. As MIL-STD-1760 requires that a network be provided to transfer Low Bandwidth signals from ASI to aircraft then this network may be used to transfer the audio signals from existing non-1760 stores. This could be easily accommodated by providing additional switching elements onto the Low Bandwidth network.

AVS Implementation: The AVS uses the Low Bandwidth network to transfer the audio signals from Sidewinder missiles to other aircraft systems. No problems were encountered with the Low Bandwidth network meeting the requirements of MIL-STD-1760 or with the control of Sidewinder missiles including the routing of the audio signals to other aircraft systems.

Test and Evaluation: The MIL-STD-1760 Evaluation Process addressed this question in issue 6 of Report 2 (Document Number 182/70/14), and concluded that the Low Bandwidth network may be used for non-1760 signals.

5.1.3.4 Impact of potential use as Low Speed Data Bus [10.1.3.1.4]

ISSUE: Affects on Low Bandwidth network from potential use as Low Speed Data Bus.

RATIONALE: A data bus system would normally use "square wave" type signals. To obtain reasonably good transitions on the waveform then the network must be capable of passing frequencies at least 9 times the bit rate of the data bus. This means that if the bandwidth of the network is limited to 50 kHz then a low speed data bus using this network would be limited to a maximum rate of 5000 bits per second. Increasing the bandwidth of the network to 1 MHz would allow a data bus with bit rates up to 100,000 bits per second to be used.

AVS Implementation: The Low Bandwidth network in the AVS was designed to allow signals between DC and 1 MHz to be transferred. This was achieved by choosing switch elements capable of transferring signals within this extended frequency range and had no other effect on the AVS design. The AVS still met all the requirements of MIL-STD-1760 associated with Low Bandwidth signals and was shown to be capable of transferring signals of up to 1 MHz.

Test and Evaluation: The AVS Evaluation Process demonstrated that the AVS was capable of transferring signals of at least 300 kHz with attenuations below 0.1 dB, see issue 3 of Report 26 (Document Number 182/70/48).

5.1.3.5 Switching Elements [10.1.3.2]

ISSUE: What type of switching elements should be used for Low Bandwidth signals?

RATIONALE: Semiconductor switches of comparable size to MIL-R-39016 relays would introduce significant series impedance into the Low Bandwidth signals lines which could cause severe degradation or attenuation of the signals dependent on the driving and receiving circuits. MIL-R-39016 relays would have little effect on the signal quality over the frequency range of the Low Bandwidth network.

AVS Implementation: The AVS uses MIL-R-39016 relays as the switch elements in the Low Bandwidth network. These have no detectable effect on the quality of signals being transferred over the Low Bandwidth network.

Test and Evaluation: The AVS Evaluation Process concluded that the implementation of the Low Bandwidth network was acceptable for an on-aircraft AEIS, see Report 26 (Document Number 182/70/48). The MIL-STD-1760 Test Process found that the AVS complied with all the Low Bandwidth requirements of MIL-STD-1760, see Report 4 (Document Number 182/70/25).

5.1.3.6 Connectors [10.1.3.3.1]

ISSUE: What type of connectors should be used for Low Bandwidth signals?

RATIONALE: The connectors or contacts used for all the Low Bandwidth signals should ensure continued overall screening of the signal lines to reduce interference both to other signal lines which could be caused by the analogue signals on the Low Bandwidth network and to the Low Bandwidth line due to noise generated by other signal or power lines. Figure 5.3 summarizes the recommendations for what connectors or contacts should be used for the Low Bandwidth network.

5.1.3.7 Cabling [10.1.3.3.2]

ISSUE: What type of cable should be used for Low Bandwidth signals?

RATIONALE: The cabling used for Low Bandwidth signals should ensure continual overall screening for the signal lines to reduce the interference both to other signal lines which could be caused by the analog signals on the Low Bandwidth network and to the Low Bandwidth signal itself due to noise generated by other signal or power lines. Use of Twinaxial or Triaxial cable will ensure the continuity of the signal screening whereas use of coaxial cables will introduce some break in the overall screening of the signals.

a. Preferred

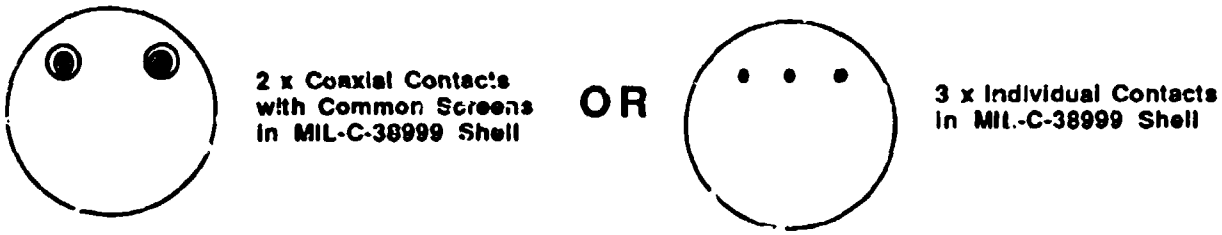

b. Non-preferred

FIGURE 5.3 Low Bandwidth Signal Connectors

5.1.4 Discrete signal issues

5.1.4.1 Release Consent switching Location [10.1.4.1.1]

ISSUE: Where should the switching elements for Release Consent be located.

RATIONALE: As Release Consent can be used to enable safety critical functions then great care must be taken to reduce the possibility that this signal could be unintentionally activated. One possible cause for this signal to be inadvertently activated is by electromagnetic pick up in the aircraft wiring. To reduce the susceptibility of this signal to electromagnetic pick up, the length of wiring between the ASI and the final switching element of the Release Consent signal should be minimized. This can be achieved by ensuring this final switching element is located in an equipment local to the ASI.

AVS Implementation: The final switching elements for the Release Consent Signal is located in the Store Station Equipment associated with the particular ASI being controlled. No problems have been found with this signal being unintentionally activated due to pick up in the wiring.

5.1.4.2 Release Consent Switching Circuit Design [10.1.4.1.2]

ISSUE: Guidance for design of Release Consent switching circuits.

RATIONALE: As Release Consent can be used to enable safety critical functions within a store then it is considered as a safety critical signal and all the guidance on safety critical switching given in paragraph 10.2.1 of Appendix A applies to this signal. Some Built-in-Test and monitoring circuits for safety critical signals require a pull down resistor on the output concerned. The value of this resistor may be as low as 1K ohm. MIL-STD-1760 now states that the isolation between Release Consent signals at different ASIs must be greater then 100k ohm. This means that if pull down resistors are to be used on the Release Consent output then each must be greater than 50K ohm to comply with this isolation requirement.

AVS Implementation: The AVS provided five switch elements in the Release consent output path. This is considered excessive as this large number of switch elements increases the probability of this signal failing with no significant increase in the safety of the circuit. The monitoring circuit of Release Consent used 5K ohm pull down resistors on the output which means that the AVS does not comply with the isolation requirements in MIL-STD-1760A.

5.1.4.3 Internal Information Transfer for Release Consent [10.1.4.1.3]

ISSUE: How does Release Consent affect internal AIS information transfer?

RATIONALE: As Release Consent is considered as a safety critical signal there is a need to be able to demonstrate the safety of the Release Consent switching circuits. This is best done if a clearly defined relationship exists between the Release Consent output and a release demand from the crew selectable switches, such as the Weapon Release, Trigger, Selective Jettison and Emergency Jettison switches. This can be achieved by providing discrete signals to each Store Station Equipment to directly control one of the switch elements in the Release Consent output line. These discrete signals are only activated on selection of one of the above switches.

5.1.4.4 Monitoring Location for Interlock [10.1.4.2.1]

ISSUE: Where should the Interlock monitoring circuitry be located?

RATIONALE: If the interlock signal is monitored locally to the ASI in the associated Store Station Equipment then the result can be transferred to other units using the internal AIS data bus. This will minimize the aircraft wiring associated with the Interlock signal, as dedicated wires are only required between the ASI and associated SSE, the data bus already being provided for other uses. However, the Interlock signal may be used as a store present indicator and could be used to disable the power outputs to the ASI to "deadface" the connector. If this is the case then locating the Interlock monitoring circuits close to the switch elements controlling the power to the ASI means that the power outputs can be disabled immediately the Interlock signal indicates store absent, otherwise delays will be introduced as the state of the Interlock signal will have to transferred over the data bus.

AVS Implementation: The Interlock monitoring circuits in the AVS are located in the same units as the power switching elements associated with the particular ASI connector, that is the primary Interlock monitors are located in the Store Station Equipment associated with the particular ASI, the Auxiliary Interlock monitors are in the Auxiliary Power Switch which contains all the relays controlling the Auxiliary Power outputs.

5.1.4.5 Circuitry for Interlock [10.1.4.2.2]

ISSUE: What guidance can be given for the designs of the Interlock circuitry?

RATIONALE: There is no requirement in MIL-STD-1760 for the aircraft to use the Interlock signal, however it is a convenient signal to assist in determining store presence. The aircraft must provide other means of determining store presence as MIL-STD-1760 states that the Interlock interface shall not be used as the sole criteria for functions which could result in an unsafe condition if Interlock circuit fails open. If the aircraft does use the Interlock interface for any time critical functions, such as to help determine time of store release during a firing sequence, then the designer must ensure that the Interlock monitoring circuit does not introduce excessive time delays.

5.1.4.6 Fixed or variable Address discretes [10.1.4.3.1]

ISSUE: Should the Address discretes have fixed or variable value?

RATIONALE: If a store was allocated an incorrect Remote Terminal address then that store could receive safety critical information transmitted to a different store, or similar store at a different location. This could result in the incorrectly addressed store achieving an unsafe state or even being unintentionally released. If the state of the address discretes can be varied it would be difficult to show that a store cannot be allocated an incorrect address, especially under fault conditions. Fixed addresses determined by hardwire links have a very low probability of failure and are therefore considered far safer for determining addresses of Remote Terminals capable of receiving safety critical information over the bus.

AVS Implementation: The AVS uses fixed addresses determined by hardwire links for all Remote Terminal address discretes. Faults in the address discrete lines were immediately detected before any safety hazards could occur.

5.1.4.7 Address determined at ASI or Equipment [10.1.4.3.2]

ISSUE: Where should the RT Address of an ASI be determined?

RATIONALE: If the RT address is determined within a removable, interchangeable structure, such as a pylon, then there is a possibility that the pylon could be installed at the wrong location. This could result in the address of two stores on the aircraft being swapped or both stores having the same address. If this happened then there is the possibility that stores are released in a wrong, unsafe, sequence or that two stores are released simultaneously. Therefore the address determination circuitry should always be fitted in the main aircraft structure that is not removable.

5.1.4.8 Structure Ground [10.1.4.4]

ISSUE: What guidance can be given for the Structure Ground signals?

RATIONALE: MIL-STD-1760A states that "Structure Ground shall provide an electrical connection between aircraft and store structures to minimize shock hazards to personnel as required by MIL-B-5087. This circuit shall not be used as a signal or power return path." The current carrying capability of the Structure Ground lines specified in MIL-STD-1760 is not large enough to be capable of carrying the high currents than can be generated by lightning strikes. This capability must be provided by other means like an overall screen on the umbilical cable.

AVS Implementation: The Structure ground signal for each ASI is bonded directly to a ground bonding point located close to the appropriate ASI. This provides the low impedance path as required by MIL-B-5087.

Test and Evaluation: MIL-STD-1760 Test Process Report 6 (Document Number 182/70/20), shows that the AVS complies with the structure ground requirements of MIL-STD-1760A. The MIL-STD-1760 Evaluation Process Report 4 (Document Number 182/70/29), shows that these requirements of MIL-STD-1760A are reasonable for an on-aircraft AEIS.

5.1.5 Power Issues [10.1.5]

5.1.5.1 Centralized or distributed switching [10.1.5.1.1]

ISSUE: Should the power switching circuitry be centralized or distributed?

RATIONALE: MIL-STD-1760 states that the application of 28V DC Power 2 may cause the safety of the store to be degraded so this signal should be treated as a safety critical supply. Therefore as many of the recommendations for safety critical signals should be applied to this line as are practically possible. This includes providing the final switching element as close to the ASI as possible. Thus a distributed system is preferred for 28V DC power 2 switching. To minimize aircraft wiring associated with 28V DC the switching of 28V DC Power 1 should also be distributed. This enables single 28V DC power cables to be routed to a store station Equipment (SSE) where this power could then be switched locally to provide the 28V DC Power 1 and 28V DC Power 2 lines to the ASI as well as being used for internal SSE power. Otherwise at least three separate sets of 28V DC Power wiring are required to each store station. Similarly reductions in aircraft wiring may be achieved if 115V AC power switching were distributed especially to store stations where two or more ASI are provided. There may be problems in the Store Station Equipment if there is limited space available, as the size of the switching elements required for these power lines is relatively large. If there is a problem with space in the area of the ASI then some or all of the switch elements associated with 115V AC power could be located centrally. If there are still space problems then some or all of the 28V DC Power 1 switch elements could be located centrally.

AVS Implementation: The switching elements for 28V DC Power 1, 28V DC Power 2, and 115V AC are all distributed, being located in the store station equipment. This reduced the wiring required in the AVS.

5.1.5.2 Centralized or distributed fault isolation elements [10.1.5.1.2]

ISSUE: Where should fault isolation elements be located?

RATIONALE: The rationale was provided in the Appendix A guidance and no further rationale is necessary.

AVS Implementation: The fault isolation elements, circuit breakers, were located in the Store Station Equipment but positioned after the switch elements. This meant that circuit breakers that had "tripped" were not detected until the outputs were activated.

5.1.5.3 Power switching elements [10.1.5.2.1]

ISSUE: What type of power switching elements should be used?

RATIONALE: MIL-STD-1760 states that the voltage level at the ASI shall comply with the normal and abnormal operation characteristics for utilization equipment defined in MIL-STD-704. The power supply provided to the AIS from the aircraft power systems would have to be well within the limits specified by MIL-STD-704 to allow for voltage drops within the AIS. To allow a reasonable specification for the aircraft power system the voltage drops within the AIS need to be minimized. The use of semiconductor switching elements for the power lines would introduce relatively large voltage drops whereas MIL-R-6106 or similar relays introduce very small voltage drops.

AVS Implementation: The AVS uses MIL-R-6106 type relays for the switching of all 28V DC power 1, 28V DC Power 2 and 115V AC power lines. The voltages on these lines presented at all the ASI met the requirements of MIL-STD-1760 under all valid load conditions although good quality laboratory supplies were used to supply the power

Test and Evaluation: The MIL-STD-1760 Test Process, Report 6 (Document Number 182/70/20), concluded that the AVS complied with all the requirements of MIL-STD-1760 concerning power lines. The MIL-STD-1760 Evaluation Process, Report 5 (Document Number 182/70/26), identified that the voltage drops within the AVS were an area of concern and every effort should be made to minimize the voltage drops on the power lines for an on-aircraft AEIS.

5.1.5.4 Isolation Elements [10.1.5.2.2]

ISSUE: What type of fault isolation elements should be used?

RATIONALE: MIL-STD-1760 gives curves defining the maximum overcurrent and maximum load current against duration relationships. These curves are derived from figures defined in MIL-STD-1498 for circuit protection devices. Many circuit breakers are available which conform to this specification however the characteristics of most fuses do not conform to these curves. Therefore great care must be taken, if fuses are to be used as the Fault isolation elements in the power lines, to ensure that the characteristics of the fuse conform with those specified in MIL-STD-1760.

5.1.5.5 Connectors [10.1.5.3.1]

ISSUE: Guidance for the connectors for Power signals.

RATIONALE: As discussed in paragraph 5.1.5.3, every effort must be made to reduce voltage drops within the AIS. Every contact in the power lines will introduce a series impedance in the line. The larger the contact the smaller this impedance is. Therefore to minimize the voltage drop due to contact impedance the largest contact practicable should be used.

AVS Implementation: All the contacts used for Primary power signals in the AVS were size 16 contacts. The AVS met all the voltage requirements of MIL-STD-1760 associated with the power signals, however, the AVS was powered using good quality laboratory supplies.

Test and Evaluation: The MIL-STD-1760 Test Process, Report 6 (Document Number 182/70/20), concluded that the AVS complied with all the requirements of MIL-STD 1760 concerning power lines. The MIL-STD-1760 Evaluation Process, Report 5 (Document Number 182/70/26), identified that the voltage drops within the AVS were an area of concern and every effort should be made to minimize the voltage drops on the power lines for an on-aircraft AEIS.

5.1.5.6 Cabling [10.1.5.3.2]

ISSUE: Guidance for cabling for Power Signals.

RATIONALE: As discussed in paragraph 5.1.5.3, every effort must be made to reduce voltage drops within the AIS. The cable used for the power lines will introduce a series impedance. The larger the cable the smaller is the impedance introduced. Therefore to minimize the voltage drop due to the cabling then the largest size cable that is practical should be used.

AVS Implementation: All the cabling associated with the primary power lines was implemented using 19/0.3 wire. The wiring between the Store Station Equipment and the Auxiliary Power Switch (APS) used to distribute the power throughout the AVS, used four 19/0.3 cables connected in parallel. The AVS met all the requirements of MIL-STD-1760 associated with the power signals however, the AVS was powered using good quality laboratory supplies.

Test and Evaluation: The MIL-STD-1760 Test Process, Report 6 (Document Number 182/70/20), concluded that the AVS complied with all the requirements of MIL-STD-1760 concerning power lines. The MIL-STD-1760 Evaluation Process, Report 5 (Document Number 182/70/26), identified that the voltage drops within the AVS were an area of concern and every effort should be made to minimize the voltage drops on the power lines for an on-aircraft AEIS.

5.1.5.7 Specific 28V DC Power 1 guidance [10.1.5.4.1]

ISSUE: What specific guidance can be given for 28V DC Power 1?

RATIONALE: MIL-STD-1760 states that "The aircraft may energize 28V DC Power 1 at any time under the assumption that all store functions so powered are either not safety critical or that multiple safety interlocks exist within the store such that store safety is not significantly degraded by activation of 28V DC Power 1."

5.1.5.8 Specific 28V DC Power 2 guidance [10.1.5..4.2]

ISSUE: What specific guidance can be given for 28V DC Power 2?

RATIONALE: MIL-STD-1760 states that "The aircraft operation shall consider that some stores may utilize 28V DC Power 2 for powering safety critical functions such that store safety may be degraded with activation of this power interface." This signal should therefore be treated as a safety critical power supply and as such, as many of the recommendations as are practical for switching of safety critical signals should be applied to this line. This includes directly interlocking this line with an aircrew selectable safety critical switch such as master arm. MIL-STD-1760 also states that "The 28V DC Power 2 Return connection shall be the ground reference for release consent." To reduce the effects that may occur due to differences in ground potential across the aircraft the circuits for generating Release Consent and 28V DC Power 2 should be physically close together and derive their power from the same source.

5.1.5.9 Specific 115V AC guidance [10.1.5.4.3]

ISSUE: What specific guidance can be given for 115V AC?

RATIONALE: MIL-STD-1760 states that: "The aircraft may energize the 115V AC power interface at any time under the assumption that all store functions so powered are either not safety critical or that multiple safety interlocks exist within the store such that store safety is not significantly degraded by activation of 115V/200V AC power." Figure 5.4 shows three options for implementing the switching of 115V AC power. Option A uses a single three pole relay to switch all phases simultaneously. This approach uses a single relay but if this interface is used to power existing stores that only require a single phase, such as AIM-9L, then the remaining two phases may be active but left unconnected. Option B shows separate relays being used to switch each phase independently. This could cause problems to stores which require all three phases to be applied simultaneously. As the switching times of the three relays will vary there could be a delay of up to 10 ms between one phase becoming active and another phase becoming active. Option C overcomes both of the above problems but at the expense of adding extra relays. This will increase the size and the cost of the circuitry required to implement the switching of 115V AC power.

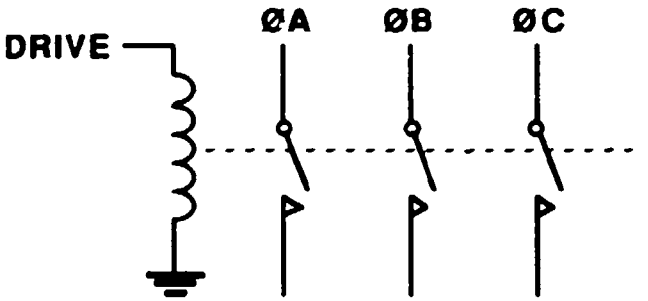

a. Common relay

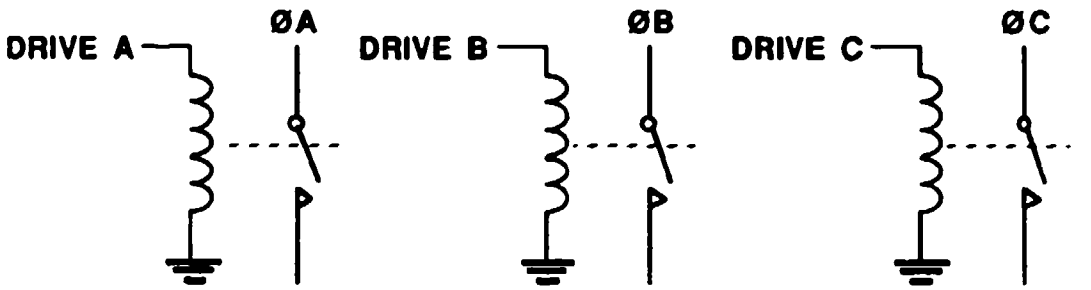

b. Separate relays

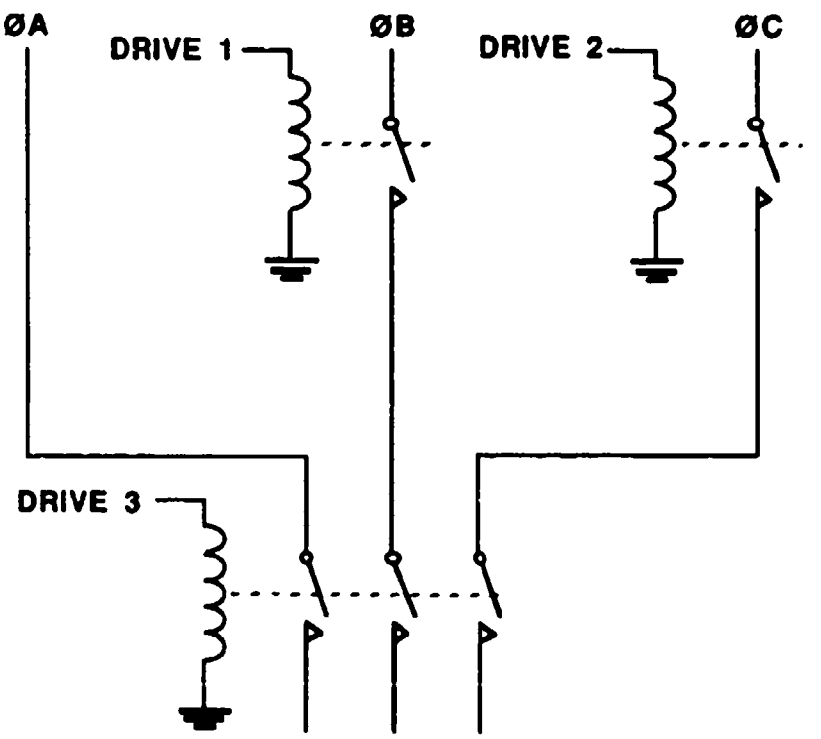

c. Use of additional switching elements

FIGURE 5.4 115V AC Switching

5.1.6 Auxiliary signal set issues

5.1.6.1 28 Volts Power [10.1.6.1.1]

ISSUE: What guidance can be given for Auxiliary 28V DC?

RATIONALE: The same rationale applies to Auxiliary 28V DC power as given for 28V DC Power 2 in paragraph 5.1.5. The physical size of the switching elements required to switch the 30 Amps for Auxiliary 28V DC is far larger than those required for 28V DC power 2 and so the problems with limited space in the store station equipment becomes far more significant.

AVS Implementation: The AVS implements the Auxiliary power switching in a central unit, the Auxiliary Power Switch (APS). This significantly reduced the amount of circuitry required in the store station equipments and hence significantly reduced their size. Positioning all the auxiliary power switches together made it far easier to isolate these switches so that interference caused by switching the high currents did not interfere with other circuitry.

5.1.6.2 115 Volts [10.1.6.1.2]

ISSUE: What guidance can be given for Auxiliary 115V AC?

RATIONALE: The same rationale applies to auxiliary 115V AC power as given for pri[illegible] 115V AC in paragraph 5.1.5.

AVS Implementation: See paragraph 5.1.6.1

5.1.6.3 Auxiliary Interlock Monitoring [10.1.6.2]

ISSUE: What guidance can be given for Auxiliary Interlock monitoring?

RATIONALE: The rationale for this issue is the same as given for the primary interlock signal in paragraphs 5.1.4.4 and 5.1.4.5.

5.1.6.4 Auxiliary Structure Ground [10.1.6.3]

ISSUE: What guidance can be given for auxiliary structure ground?

RATIONALE: The rationale for this issue is the same as given for the primary structure ground line in paragraph 5.1.4.8.

5.1.7 Connector Issues

5.1.7.1 High Bandwidth contacts [10.1.7.1.1]

ISSUE: What contacts should be used for High Bandwidth signals?

RATIONALE: The specifications for contacts in slash sheets /28 and /75 to MIL-C-39029 are too generalized for use with Type B signals as specified in MIL-STD-1760. Contacts conforming to these slash sheets cannot be guaranteed to meet the VSWR requirements for the type B signals. New slash sheets have been released which specify contacts specifically intended to be used for the Type B signals defined in MIL-STD-1760 such that contacts conforming to these new slash sheets (/102 and /103) are guaranteed to meet the VSWR requirements of MIL-STD-1760. These contacts should now be used for the Type B signals carried on High Bandwidth 1. In

addition, as contacts conforming to slash sheets /102 and /103 have a characteristic impedance of 50 ohm, then these contacts would also be suitable for High Bandwidth 2 signals which are specified in MIL-STD-1760 as also having a characteristic impedance of 50 ohms. High Bandwidth 3 and 4 are specified as having a characteristic impedance of 75 ohms, so contacts conforming to /28 and /75 would be more suitable for these signals.

5.1.7.2 Other Guidance [10.1.7.1.2]

ISSUE: What other Guidance can be given for the primary connector?

RATIONALE: The rationale was provided in the Appendix A guidance and no further rationale is necessary.

5.1.8 Reserved Provisions Issues

5.1.8.1 Fiber Optic connector contacts [10.1.8.1.1]

ISSUE: What connector contact provision should be made for Fiber Optic signals.

RATIONALE: The contacts for Fiber Optic signals have not been specified therefore cannot be fitted.

5.1.8.2 Hardware Provision for Fiber Optic [10.1.8.1.2]

ISSUE: What hardware provisions should be made for Fiber Optic signals?

RATIONALE: Specifications for Fiber Optic cables or terminals to be used for MIL-STD-1760 do not exist therefore no provisions can be made.

5.1.8.3 Hardware Provision for 270V DC [10.1.8.2.1]

ISSUE: What hardware provisions should be made for the 270V DC signals?

RATIONALE: It is good practice to provide expansion capabilities in all units.

5.1.8.4 Connector Provisions for 270V DC [10.1.8.2.2]

ISSUE: What connector provisions should be made for the 270V DC signals?

RATIONALE: The size 16 contacts are already specified therefore these can be fitted where appropriate.

5.1.8.5 Cabling Provision for 270V DC [10.1.8.2.3]

ISSUE: What cabling provisions should be made for the 270V DC signals?

RATIONALE: It is good practice to provide spare wires in cable runs, where appropriate, to minimize the effects of modifications.

5.2 Detailed Guidance on Specific Issues

5.2.1 Safety Critical Switching

5.2.1.1 Number of Switch elements [10.2.1.1]

ISSUE: How many switch elements should be provided in safety critical signal paths?

RATIONALE: To meet the usual safety critical requirement that no single fault shall cause the inadvertent activation of a safety critical output, then at least two switch elements need to be provided in the signal path. To be able to fully test the safety critical output circuits then each of the switch elements should be activated during a built in test sequence. To ensure that the no single fault requirement stated above is still met during this test sequence, a third switch element is required to ensure that the circuit can be safely exercised even under fault conditions. Adding more switch elements would not greatly improve the overall safety of the circuit and would significantly affect the reliability of the circuit.

5.2.1.2 Position of Switch elements [10.2.1.2]

ISSUE: Where should the safety critical switch elements be located.?

RATIONALE: The rationale for this issue is the same as given for the release consent signal in paragraph 5.1.4.1.

5.2.1.3 Type of switch elements [10.2.1.3]

ISSUE: What type of switch elements should be used for safety critical signals?

RATIONALE: The rationale was provided in the Appendix A guidance and no further rationale is necessary.

AVS Implementation: Most of the safety critical outputs from the AVS have both a mechanical switch and a semiconductor switch in the signal path. This combination was found to work well within the AVS producing switch response times in the order of 0.3 ms for semiconductor switches compared with 10 ms for mechanical switches enabling very accurate control of pulse widths on these signal lines.

Test and Evaluation: The AVS Evaluation Process, Report 8, Issue 2, Document Number 182/70/35, measures the response time of the safety critical outputs from the elements on the armaments bus. This shows response times in the order of 0.3 ms for the EJECT A and FIRE A outputs which have semiconductor switching elements, and response times of 10.9 ms for Release consent which is controlled by mechanical switches.

5.2.2 Safety Critical data transfer [10.2.2]

ISSUE: Guidance for safety critical data transfer on MIL-STD-1553 bus.

RATIONALE: The rationale was provided in the Appendix A guidance and no further rationale is necessary.

AVS Implementation: The AVS implements a system similar to that given as an example in Appendix A. The selection of a safety critical switch (such as MAS, Trigger, etc.), generates an interrupt to the SMS processor. This processor then generates the relevant critical command words within the appropriate messages and passes these to the Bus Controller processor for transmission on the MIL-STD-1553 Armaments Bus. The Bus Controller processor identifies that a critical command word is to be transmitted and that an associated critical authority word is required. This processor then generates the critical authority word by obtaining the relevant

information from an authority code table. However, access to this code table is limited by separate discrete monitors of the critical switch inputs such that access can only be obtained to those codes relevant to the critical state presently demanded by the critical switches. The Bus Controller processor then inserts the critical authority word in the appropriate message and transmits the completed message on the MIL-STD-1553 armaments bus.

5.2.3 Use of Standard Modules

5.2.3.1 Process Control Equipment (PCE) [10.2.3.1]

ISSUE: Can standard modules be used in the PCE?

RATIONALE: The use of common modules would reduce development time and cost, probably reduce production costs and will reduce the spares stock required to support the equipments.

5.2.3.2 Store Station Equipments (SSE)

ISSUE: Can standard modules be used in SSE?

RATIONALE: The use of common modules is desirable to reduce development time and cost, to probably reduce production costs and to reduce the spares stock required to support the equipments.

5.2.4 Built in test circuitry [10.2.4]

ISSUE: What guidance can be given for BIT circuitry in the AIS?

RATIONALE: The rationale was provided in the Appendix A guidance and no further rationale is necessary.

5.2.5 Connectors [10.2.5]

ISSUE: What guidance can be given for connectors to be used within the AIS.

RATIONALE: The rationale was provided in paragraphs 10.2.5 and 9.3.1.3 of the Appendix A guidance and no further rationale is necessary.

5.2.6 Connector pin allocations [10.2.6]

ISSUE: Guidance for signal allocation in non-ASI connectors.

RATIONALE: Using guard contacts at ground potential will ensure that any adjacent pin shorts to the safety critical signal being protected will be detected, as this short will blow a fuse or trip a circuit breaker as soon as the safety critical signal is activated. However, such a short could cause an "earth loop" which in some situations could itself be a safety hazard. If this is the case then open circuit guard pins could be used but then an adjacent pin short would not be detected. High current or high voltage signals can generate a lot of electromagnetic interference when voltages or currents on these lines are changed. To prevent this from disrupting other signals then these high current and high voltages signals should be separated from other types of signal.

5.2.7 Physical Design of Equipment [10.2.7]

ISSUE: Guidance on physical design of equipment.

RATIONALE: Circuitry associated with high currents or high voltages can generate considerable electromagnetic interference. To prevent this disrupting other circuits these high current or high voltage circuits should be kept physically separate from other circuitry.

5.2.8 Electromagnetic Considerations (EMC, EMP, TEMPEST) [10.2.8]

ISSUE: Effects on AIS design due to EMC, EMP and TEMPEST.

RATIONALE: The rationale was provided in the Appendix A guidance and no further rationale is necessary.

6. RATIONALE FOR APPENDIX A SECTION 11

Paragraphs 6.1.1 through 6.2.22 of this section provide rationale derived from the AVS and other sources to support the guidance given in paragraphs 11.1.1 through 11.2.9 of Appendix A. Issue statements and subjects have been summarized in some paragraphs. Where rationale was supplied in the guidance text, and further provision considered superfluous, then extra rationale is not provided.

6.1 MIL-STD-1760 LDD Implementation This section provides, when applicable, additional rationale and details of the AVS implementation for the issues raised in section 11.1 of Appendix A.

6.1.1 Overall LDD Impacts [11.1.1]

ISSUE: Generic software versus store specific software.

RATIONALE: The rationale was provided in the Appendix A guidance and no further rationale is necessary.

AVS Implementation: The LDD requirements allowed the developments of truly generic software packages capable of selecting, controlling and realizing mission stores compliant with the standard. The main AVS PCE SMS processor packages responsible for the LDD generic software were:

a.	PCE SMS Level 5 package:	M1760_STORE_CONTROL
b.	PCE SMS Level 4 package:	STORE_DESCRIPTIONS
c.	PCE SMS Level 4 package:	STATE (Safety critical)
d.	PCE RTS Level package:	DATA_ENTITIES
e.	PCE SMS Level 3 package:	MESSAGE_FAILURE
f.	PCE BC module:	SRPROC (Service Request Extraction)
g.	PCE BC module:	SFPROC (Bitlog processing)

Multiple mission types (AGM, SRAAM, and BOMB) were controlled using these generic modules.

6.1.2 Store Power-Up Timing [11.1.2.1]

ISSUE: When should mission stores be first powered up?

RATIONALE: The rationale was provided in the Appendix A guidance and no further rationale is necessary.

AVS Implementation: The AVS always powers mission stores at PCE power application to identify the mission store type such that the inventory could be established. Power was then left on from this time until the store was released. Keeping power on throughout the mission would not be adopted for a flight implementation.

6.1.3 Reduction of Power Up Time [11.1.2.2]

ISSUE: Software design to minimize system configuration time from power up.

RATIONALE: The rationale was provided in the Appendix A guidance and no further rationale is necessary.

AVS Implementation: The AVS PCE did not implement a concurrent type of scheme. It sequenced around each pylon and therefore each mission store. During inventory upload this included initiating Interruptive BIT to each pylon's controlling SSE. Consequently the time taken to establish inventory at power up was very long indeed (up to 15 seconds). The main reason for this implementation was to allow the automatic detection of existing stores. The AVS solution was not optimized and is not being offered for guidance. Figure 11.3 of Appendix A is not relevant to the AVS.

6.1.4 Error Checking [11.1.2.3]

ISSUE: What error checking should be made by an AIS during mission store power up?

RATIONALE: The rationale was provided in the Appendix A guidance and no further rationale is necessary.

AVS Implementation: The AVS did not include any specific power up checking software but simply used the normal error management software. Because the AVS just waited 500 ms after applying mission store power it was not necessary to impose the checks provided in figure 11.4 of Appendix A. The AVS solution was tailored to AVS requirements and would not be suitable as a generic solution.

6.1.5 Subaddress Allocation [11.1.3]

ISSUE: Allocation of subaddress to stores and remote interface units.

RATIONALE: The rationale was provided in the Appendix A guidance and no further rationale is necessary.

AVS Implementation: The AVS did not apply additional subaddress checking. It did, however, ensure that safety critical subaddresses were only generated at one point within the application code.

6.1.6 Checksum Generation Point [11.1.4.1]

ISSUE: Should the checksum generation be implemented in software.

RATIONALE: The rationale was provided in the Appendix A guidance and no further rationale is necessary.

AVS Implementation: The AVS PCE implementation is to generate checksums in software. It was performed by the Bus Controller (BC) firmware. The reason it was located here was that messages requiring system time were processed by the BC. It was therefore necessary to calculate the checksum after the system time was latched in. The AVS solution worked well and time available allowed the necessary Motorola 68000 microprocessor instructions required to implement the checksum.

6.1.7 LDD Checksum Computation [11.1.4.2]

ISSUE: What are the effects of computing the LDD checksum?

RATIONALE: The rationale was provided in the Appendix A guidance and no further rationale is necessary.

AVS Implementation: The checksum is implemented in the BC firmware in the manner discussed in the guidance. This proved to be a very successful implementation.

6.1.8 Use of Store Description Protocol [11.1.5.1]

ISSUE: What effects upon software design are imposed by the store description protocol?

RATIONALE: The rationale was provided in the Appendix A guidance and no further rationale is necessary.

AVS Implementation: The AVS implements the full protocol specified in the LDD entirely within the PCE SMS processor. Within the software titled PCE SMS processor Level 4 package: STORE_DESCRIPTIONS, a flexible data structure of the type recommended in figure 11.6 of Appendix A is used. The structure met the goals of reducing the size to match the inventory requirements but an overhead is incurred.

6.1.9 Inventory Data Base Structure [11.1.5.2]

ISSUE: How should the AIS inventory data base be structured to best use the store description data?

RATIONALE: The rationale was provided in the Appendix A guidance and no further rationale is necessary.

AVS Implementation: Within the PCE Inventory data structure, provision is made for the store identity and the ASCII string. The string is used by the upload package Store_Descriptions to determine what type of emulated MIL-STD-1760 store is being used. The inventory is then configured from this information and passed to the display system.

6.1.10 Usage of Standard Software [11.1.6.1]

ISSUE: Can standard safety critical software for control of mission stores be used?

RATIONALE: The rationale was provided in the Appendix A guidance and no further rationale is necessary.

AVS Implementation: The AVS PCE software solution is to contain all safety critical state control in one Ada package, PCE SMS Level 4 package STATE. This package combined with the data package indicating current state (PCE SMS Level 4 package CRITICAL-CONTROL-MESSAGE) generates all critical control words and the safety critical subaddress to change the state to a new requested store. The package also performs the safety critical monitor, checking both demanded and acquired monitor fields. The AVS PCE software solution also included the generation of the safety critical messages for SSEs in the same Ada package. This solution worked very well and the software required to effect safety critical state changes are contained in two Ada packages.

6.1.11 Software Structure [11.1.6.2]

ISSUE: What software structure should be used for safety critical processing?

RATIONALE: The rationale was provided in the Appendix A guidance and no further rationale is necessary.

AVS Implementation: As described in the AVS implementation for [11.1.6.1] all safety critical software was separated from remaining mission critical software via an Ada package in the SMS processor. The generation of the authority codes was performed by the PCE BC firmware whenever it detected a receive subaddress 11 message and was therefore separated from the critical control word building software. The AVS solution did not include a separate safety critical acyclic queue in the BC. Safety critical message shared an acyclic queue with Mission Critical messages. This implementation was successful, but would result in more complicated software validation activities for safety critical systems.

6.1.12 Usage of Monitor Message [11.1.6.3]

ISSUE: How should the AIS use safety critical monitor message?

RATIONALE: The rationale was provided in the Appendix A guidance and no further rationale is necessary.

AVS Implementation: Within the PCE SMS processor Level 4 Ada package STATE, a monitor message was always sequenced after a control message. Checks are made after 20 ms for the acknowledgment of the demand by checking the demand field. One re-check is scheduled if this first check fails. Then every 20 ms for up to 500 ms a check is made on the acquired field. If after 500 ms the requested state is not attained by the mission store, then the request is indicated as failed. This mechanism works very well. What was not implemented in the PCE was the re-sequencing through the safety critical states upon state change error. The PCE response was to "hang" the mission store. This approach is not sufficient for a flight system, whereas the approach offered in the guidance is.

6.1.13 Software Design for State Control [11.1.6.4]

ISSUE: What software design is required to support safety critical state control?

RATIONALE: The rationale was provided in the Appendix A guidance and no further rationale is necessary.

AVS Implementation: The implementation suggested in the Appendix A guidance is based upon the AVS implementation which used a generic store controller built around the safety critical states to control mission stores. The AVS did not implement a true finite state implementation, but if it had, then the integrity of software would have been increased.

6.1.14 Status Word Bit Effects [11.1.7.1]

ISSUE: What is the effect on software design of each status word bit either having a specified use or not being allowed to be used?

RATIONALE: The rationale was provided in the Appendix A guidance and no further rationale is necessary.

AVS Implementation: Within the PCE BC firmware, a common status word handling routine was used. It was responsible for decoding the bit(s) and, if needed, assigning priorities to them. Each bit set had an associated handling module and these were applicable to all RT types (including non mission store units, such as SSEs and SNEs) employing the same LDD protocol. With this scheme the software was reduced and it freed the main SMS processor from error bit handling.

6.1.15 Mode Code Effects [11.1.7.2]

ISSUE: What are the effects on software design of restricting the number and use of mode codes?

RATIONALE: The rationale was provided in the Appendix A guidance and no further rationale is necessary.

AVS Implementation: Only a certain number of Mode Codes are used in the AVS Implementation:

a. Transmit Vector Word
b. Synchronize with Data
c. Reset Remote Terminal

It was not possible to develop a full error management procedure embodying all available mode codes. The used set were considered to be sufficient.

6.1.16 Vector Word Effects [11.1.8.1]

ISSUE: What are the effects upon AIS software design caused by the extraction of vector words?

RATIONALE: The rationale was provided in the Appendix A guidance and no further rationale is necessary.

AVS Implementation: In response to service request, the PCE BC firmware initiates the specified protocol to extract all available data words. It then presents these data words to the SMS processor for decoding and action. This scheme worked well as it freed the SMS processor from the vector word extraction protocol. The SMS processor is the best place to decode the vector words because this type of intelligence should not be built into BC firmware.

6.1.17 Checksum Failure Recovery [11.1.8.2]

ISSUE: What are the effects upon AIS software design in holding the last two transmit messages for a mission store to ensure recovery from a checksum failure?

RATIONALE: The rationale was provided in the Appendix A guidance and no further rationale is necessary.

AVS Implementation: The AVS implements the scheme offered in the guidance. Holding Buffers are available for each RT for the last receive (RX) message. This scheme complicated message transmission software with a resultant effect on intermessage gaps. As a scheme it worked well but by its very nature it was an 'untidy' software solution.

6.1.18 Error Management [11.1.8.3]

ISSUE: Effects of a suitable error management procedure.

RATIONALE: The rationale was provided in the Appendix A guidance and no further rationale is necessary.

AVS Implementation: The AVS did not action all of the flags embedded within the extracted word, it only took action on checksum failures (by instructing the PCE BC firmware to retransmit the last 2 receive (RX) messages) and the code indicating no 3 phase power. In all other cases the mission store was shut down. This solution would be unacceptable in an aircraft implementation.

It had to be this way in the AVS to tailor the software task to the available funds. In dealing with a standard vector word, care has to be taken in the field processing software.

6.1.19 Asynchronous Message Scheduling [11.1.8.4]

ISSUE: How should the AIS software implement scheduling of asynchronous message transactions requested from a mission store?

RATIONALE: The rationale was provided in the Appendix A guidance and no further rationale is necessary.

AVS Implementation: The AVS PCE did not implement the scheduling of asynchronous message transactions. This was related to the complexity of the task and the available funding for the software development.

6.1.20 Subsystem Flag Response [11.1.8.5]

ISSUE: How should the AIS software respond to the Subsystem Flag (bit time 17)?

RATIONALE: The rationale was provided in the Appendix A guidance and no further rationale is necessary.

AVS Implementation: The AVS, in response to subsystem flag, would first schedule a Reset Terminal Mode Code such that the flag can be rechecked. Upon valid subsystem flag the PCE BC firmware would determine, from dual ported RAM set up during store descriptions upload, whether the RT implemented a BIT LOG word. If it did, then it would be extracted by scheduling a transmit (TX) message transaction for the associated subaddress. The BIT LOG word would then be presented to the SMS processor for decoding. Decoding in the AVS solution is to simply store the data word for future interrogation.

6.1.21 Built in Test Log (BIT LOG) Extraction [11.1.8.6]

ISSUE: How should the AIS software implement BIT LOG word extraction?

RATIONALE: The rationale was provided in the Appendix A guidance and no further rationale is necessary.

AVS Implementation: The BIT LOG word position is saved on dual ported BC RAM during store description processing. If implemented by the mission store, it is the PCE BC firmware's responsibility to extract the BIT LOG word from the mission store. The decision to make the BC firmware responsible for the BIT LOG word extraction was based on removal of this function from the SMS processor because it was not easily dealt with in the fully synchronous nature of the SMS BC acyclic communication. Such a synchronous scheme would not be adopted for a flight solution and the SMS processor could have the responsibility of BIT LOG word extraction. However the BC firmware should still have the responsibility of validating the subsystem flag by automatically scheduling a Reset Terminal mode code.

6.1.22 Busy Bit Management [11.1.8.7]

ISSUE: How should the AIS implement busy bit management?

RATIONALE: The rationale was provided in the Appendix A guidance and no further rationale is necessary.

AVS Implementation: All busy bit management is handled by the PCE BC firmware. The design of this firmware is such that it can handle multiple RTs being busy simultaneously. The BC firmware will schedule an 'initiate self test' mode code to the busy RT. This mode code has the advantage that it always returns the current status word allowing the clearing of the busy bit to be determined by the BC. The BC will keep scheduling (interleaved with other acyclics, cyclics and even other RT busy clearing activity) this mode code until it is cleared or 4000 attempts have been made. If the RT is excessively busy then it is indicated as a failed RT to the SMS processor. This implementation takes no account of LDD busy times. However it is successful and as long as the mission store is compliant with the busy times, then throughput is maximized without the need for timers and special busy software.

6.1.23 Data Bus Error Handling [11.1.8.8]

ISSUE: How should the AIS manage data bus errors in general?

RATIONALE: The rationale was provided in the Appendix A guidance and no further rationale is necessary.

AVS Implementation: The PCE BC firmware is responsible for all data bus errors (protocol or status word errors). The design in the main follows the guidance offered. It did result in a relatively complex scheme but provided real benefits in:

a. The SMS processor was relieved of this responsibility.
b. Only hard errors on both buses resulted in mission stores being shut down.

6.1.24 Retry Strategy [11.1.8.9]

ISSUE: What is a general error retry scheme for data bus failures using primary and secondary buses.

RATIONALE: The rationale was provided in the Appendix A guidance and no further rationale is necessary.

AVS Implementation: See 6.1.22. The flowchart offered in the guidance is very similar to the BC firmware implementation. This scheme works very well within the AVS.

6.1.25 Checksum Failure Recovery [11.1.8.10]

ISSUE: How should the AIS implement recovering from checksum failure under Notice 2/3.

RATIONALE: The rationale was provided in the Appendix A guidance and no further rationale is necessary.

AVS Implementation: Notice 2/3 requirements are not implemented.

6.1.26 Size and Performance Improvements [11.1.9.1]

ISSUE: How can software size and performance requirements be improved if all measurement data is with respect to standard coordinate systems?

RATIONALE: The rationale was provided in the Appendix A guidance and no further rationale is necessary.

AVS Implementation: Within the AVS, the avionics data bus simulation of other avionics subsystem (such as INS, FCC, etc.) data entities were to LDD scaling. This meant that no conversion software was required by the Avionics processor in the PCE. This may not be typical of a flight system where avionic data may either not be available as a single data entity (converted from other entities), or the scalings of such data may be inconsistent with LDD scalings.

6.1.27 Benefits of Common Data Entities [11.1.10.1]

ISSUE: How should the AIS software be structured to maximize the benefits of common data entity definitions?

RATIONALE: A real reduction in processing power requirements within the AIS is achieved by the fact that no data conversion is required for different store types. Data conversion should be performed as fast as possible to reduce any data latency effects.

AVS Implementation: All data relevant to the current selected package is held in a shared memory - entity data base. It is placed into this data base as soon as the data has been processed (by the avionics processor for incoming data and the SMS processor for store sourced data).

6.1.28 Discrete Control Management [11.1.10.2]

ISSUE: How should the AIS manage the Discrete Control Word 1?

RATIONALE: The rationale was provided in the Appendix A guidance and no further rationale is necessary.

AVS Implementation: The discrete control word is used to control all modes for the AVS 1760 missile evaluation; the implementation mapping is as provided in Table 6.1.

TABLE 6.1 Store Targeting Modes via discrete control word 1

Targeting Mode	Boresight	Commence Targeting	Accept Targeting	Autolock	Widen	Narrow
Deselect Targeting	1	0	0	0	X	X
Caged	1	1	0	0	X	X
Boresight	1	1	0	1	X	X
Scan	0	1	1	0	X	X
Lock	0	1	1	1	X	X
Unlock	0	1	1	0	X	X
Magnify	X	X	X	X	0	1
Unmagnify	X	X	X	X	1	0

Key: 0=Bit Reset 1=Bit Set X=Don't care

6.1.29 System Time Management [11.1.10.3]

ISSUE: How should the AIS software manage system time to ensure synchronism on the stores data bus?

RATIONALE: The rationale was provided in the Appendix A guidance and no further rationale is necessary.

AVS Implementation: All system time required to be transmitted in messages to mission stores has the system time latched in by the BC firmware after the message transaction request has been de-queued. This ensures the most recent system time is sent. Additionally, at the moment that any synchronize with data mode codes are de-queued and sent then the system time is saved. This time can then be used for accuracy checking. The AVS scheme worked very well.

6.1.30 Usage of Store IBIT Time [11.1.10.4]

ISSUE: How should the AIS software use the uploaded Mission Store Interruptive BIT duration.

RATIONALE: The rationale was provided in the Appendix A guidance and no further rationale is necessary.

AVS Implementation: The AVS PCE software design solution does not use uploaded IBIT duration times during mission store IBIT processing. Its IBIT scheduling is very simplistic, sequencing IBITS for each pylon and waiting 500 ms after the initiation of IBIT of a mission store.

6.1.31 Fuzing Control [11.1.10.5]

ISSUE: Control of fuzing using the Fuzing Control word.

RATIONALE: The rationale was provided in the Appendix A guidance and no further rationale is necessary.

AVS Implementation: The AVS only uses the fuze setting "Function at impact." A representation of the complete fuzing word is available in the PCE SMS level 4 package CRITICAL_CONTROL_MESSAGE. A dedicated procedure is used to fuze the mission store (a PCE SMS level 4 package procedure named M1760_MESSAGES. FUZE_STORE). This is called whenever the associated mission store is taken to the execute arming state.

6.1.32 Validity Word Management [11.1.10.6]

ISSUE: How should the AIS software manage Validity Words?

RATIONALE: The rationale was provided in the Appendix A guidance and no further rationale is necessary.

AVS Implementation: Refer to [11.1.10.6] and the following:

a. Validity words were used as change markers. This only worked because the mission store emulation software made the same assumption.

b. The safety critical control word in the safety critical subaddress was sometimes marked as invalid even if it was valid (see a). This solution would not be satisfactory where real mission stores are interfaced with.

c. All validity word marking was achieved by preset values in message building software. No intelligence, for targeting data, was built into validity word processing.

6.1.33 Header Code Management [11.1.10.7]

ISSUE: What AIS design should be employed in software management of Header Codes?

RATIONALE: The rationale was provided in the Appendix A guidance and no further rationale is necessary.

AVS Implementation: The main header code used in the AVS was the safety critical control message header code. Safety critical control messages were assembled in different parts of the software (for example in the case of critical control words, the PCE SMS Level 4 package STATE assembled the message; for system time updates, the PCE SMS Level 4 package SYSTEM_TIME_MANAGEMENT assembled the message). In these cases the header code was placed into the first word of the message by accessing a common constant integer equal to the header code value. This was held as the constant integer PCE SMS Level 4 package "CRITICAL_CONTROL_MESSAGE. HEADER_WORD." This has the advantage of containing the header code to one point in the application code.

6.1.34 Standard Data Word Benefits [11.1.11.1]

ISSUE: Can the benefits of standard data formats be realized in a AIS software implementation?

RATIONALE: The rationale was provided in the Appendix A guidance and no further rationale is necessary.

AVS Implementation: The AVS PCE included an entity data base design to hold all available data entity codes. It was refreshed by the avionics data for aircraft system data entities and by the SMS processor store sourced data entities. Its access mechanism was "fast as possible" which resulted in its data structure design being simplistic. The combining of the entity data base with the standard message processing, using the uploaded store description, proved to be a powerful software design solution.

6.1.35 Base Message Usage [11.1.12.1]

ISSUE: How should the AIS software use base message formats?

RATIONALE: The rationale was provided in the Appendix A guidance and no further rationale is necessary.

AVS Implementation: The base message format was embodied into each message building routine. The header codes were available from a common point (see 11.1.10 of Appendix A), and validity words were packed as constants for each message transaction.

6.1.36 Generic Software Development [11.1.13.1]

ISSUE: Should a generic mass data transfer set of software be developed in the AIS or should implementation be specific to each mission store?

RATIONALE: The rationale was provided in the Appendix A guidance and no further rationale is necessary.

AVS Implementation: Mass data transfer protocols were not included in the NOTICE 1 LDD and therefore not implemented by the AVS.

6.2 General Software Issues This section provides, where applicable, additional rationale and details of the AVS implementation for the issues raised in section 11.2 of Appendix A.

6.2.1 Language Selection [11.2.1]

ISSUE: Which software language(s) should be used in the AIS?

RATIONALE: The rationale was provided in the Appendix A guidance.

AVS Implementation: Whenever possible the AVS PCE and SNE software were written in Ada. All other processor (SSE 8751, PCE BC 68000, CSE 68000) firmware was written in Assembler. The elements of the PCE that could not be written in Ada were:

a. Interfacing with hardware which had strict short timing constraints (such as PCE RT hardware)

b. Bit Manipulation
c. Semaphore Access

These software elements formed less than 3 percent of the overall PCE software size (some 17,000 lines of source code). The AVS firmware met the requirements defining firmware as specified in MIL-STD-2167.

6.2.2 Effects of Package Structure [11.2.2.1.1]

ISSUE: The effect of the Ada package structure upon the design of AIS software.

RATIONALE: The rationale was provided in the Appendix A guidance.

AVS Implementation: Throughout the PCE avionic processor and SMS processor software design, the Ada package has been exploited to bring logically related functions together and to provide structure and readability. Within the SMS processor, the design solution has resulted in a 'level' approach to packages. This method provided an excellent structural split and allowed control over the design package dependencies crucial for a good Ada design solution. The following list of package names, extracted from the PCE SMS processor Ada design solution, convey the importance of the package to the AIS design:

a. INITIAL_SEQUENCE	)	
b. STORE_CONTROL	)	
c. M1760_STORE_CONTROL	)	from Level 5
d. AMRAAM_CONTROL	)	
e. AIM9L_CONTROL	)	
f. POWER	)	
g. STATE	)	
h. DISCRETE	)	from Level 4
i. AUTHORITY	)	
j. SNE_CONTROL	)	
k. ACYCLIC	)	
l. CYCLIC_MANAGER	)	
m. MODE_CODE	)	from Level 3
n. MESSAGE_FAILURE	)	

As can be seen just by package name, logical groupings of system software requirements have occurred. Each of the above packages contains procedures and functions in their package specifications. An example is shown in figure 6.1, which is an extract from the package STORE_CONTROL

```
Package Store_Control is

Store_hung                                  :exception   ;

type Poss_Jet_Types is (Eject, PS, Jet);

subtype Fuzing_modes is AV_to_SMS_Comms.Mode_option_types
                                            range Nose_fuze . . Nose_and_tail_Fuze;

subtype SRAAM_modes is AV_to_SMS_Comms.Mode_option_types range boresight . . Slave:

Last_fuzing                                 :Fuzing_Modes;

LAst_SRAAM_Selected_Mode                    :SRAAM_Modes;

AMRAAM_Selected_Missile                     :AMRAAM_Control.Mode_Types;

Selected_Missile                            :Store_Numbers;

Procedure Hang_store      (Number           :in store_numbers;
                          Reason            :in Store.Possible_hang_Reasons);

Procedure Change_Bomb_Fuzing(new_Fuzing     :Fuzing_modes;
                          Achieved          :out Boolean);

Procedure Change_State    (Number           :in Store_Numbers;
                          New_state         :in MIL_STD_1760.Demanded_States);

Procedure  Trigger_Store  (Num              :in  Store_Numbers);

Procedure  Jettison_Store (Num              :in Store_Numbers;
                          Jet_Type          :in Poss_Jet_Types);

Procedure  Select_store_for_release
                          (Class                        :in Store.Classes;
            Selected_Quantity               :in AV_to_SMS_Comms.Weapons_packet;
                          Page_Changed                  :in Boolean;
                          No_Stores_of_requested_type   :out Boolean);

Procedure  Deselect_Last_Store;

Procedure  Reject_Selected_Stores;

end Store_Control;
```

FIGURE 6.1 Store Control Package Specification

6.2.3 Package Development for Data Only [11.2.2.1.3]

ISSUE: Development of packages containing only data.

RATIONALE: The rationale was provided in the Appendix A guidance.

AVS Implementation: The AVS did use data only packages all below the size criteria offered in the guidance. These packages were for inter processor communication for requests, controls, data entities and inventory. As long as the size of these packages are controlled and the specification contents are consistent with the logical grouping goals of packages, the technique works well for inter 'activity' communication.

6.2.4 Ada Tasking [11.2.2.2]

ISSUE: Should tasking be used in the AIS software Design?

RATIONALE: The rationale was provided in the Appendix A guidance.

AVS Implementation: Ada Tasking was not used in the PCE or SNE Ada design solutions. This was because the task switching times were unacceptable for the low level use of tasks. It was also felt that the use of tasks, even for high level state control, was too risky for the program. This was because of the immaturity of the compiler and its underlying multitasking executive.

6.2.5 Dynamic Data Structures [11.2.2.3]

ISSUE: Should dynamic data structures be used within an AIS design?

RATIONALE: The rationale was provided in the Appendix A guidance.

AVS Implementation: Early experience of using such constructs as variant records, showed that the first generation Telesoft Ada compiler did not manage the heap very well. It was a risk reduction decision not to use any dynamic data structures within the AVS Ada, even though some requirements (such as dynamic configuration and extracted store descriptions) lend themselves well to these Ada constructs (Access types, etc.).

6.2.6 Exceptions [11.2.2.4]

ISSUE: How should exceptions be used in an AIS software design?

RATIONALE: The rationale was provided in the Appendix A guidance.

AVS Implementation: The AVS PCE SMS processor Ada design solution makes use of Ada exceptions within the layered approach to software design. Real exceptional events, such as a RT on the MIL-STD-1760 data bus has failed, are communicated via package specification declared exceptions. These exceptions travel upwards and are translated at each level into more system failures. For example the failure of an RT could be:

a. Level 3 RT_Dead
b. Level 4 Mission_store_dead
c. Level 5 Hung_Store

The AVS experience shows that limiting exceptions to package specifications, promotes good use of exceptions resulting in a better software standard.

6.2.7 Genetic Units [11.2.2.5]

ISSUE: When should genetic units be established?

RATIONALE: The rationale was provided in the Appendix A guidance.

AVS Implementation: The PCE Ada software did not have any generic packages. This was because the compiler did not implement this construct and that even if it did, it was outside the scope of the contract to design truly generic packages.

6.2.8 Data Hiding [11.2.2.6]

ISSUE: How should date hiding be used in AIS software design?

RATIONALE: The rationale was provided in the Appendix A guidance.

AVS Implementation: The AVS PCE software design as discussed in paragraph 11.2.2.1.3 of Appendix A, uses the package program unit to provide the logical structure. Wherever possible, data structures have been hidden within the body of package. The PCE SMS processor level 4 package STORE_DESCRIPTIONS is a good example. The data structure holding the upload subaddress implementation is hidden from the calling software and can only be accessed by dedicated procedures available in the package specification. The AVS PCE software design did not make much use of the "Private type" construct. This was mainly due to the inexperience of the software design team in using Ada.

6.2.9 Separate Compilation [11.2.2.7]

ISSUE: Use of the separate compilation Ada feature to assist in program modulization.

RATIONALE: The rationale was provided in the Appendix A guidance.

AVS Implementation: This Ada feature was not available in the first generation Telesoft Ada compiler.

6.2.10 Constraint Checking [11.2.2.8]

ISSUE: When should full constraint checking be applied to object code?

RATIONALE: The rationale was provided in the Appendix A guidance.

AVS Implementation: During the development of the AVS Ada software, all constraint checking was switched on. Additionally, the design of the software ensured that all variables were constrained to the relevant range. Subtypes of integer, for example, were used. During testing this feature proved invaluable. This was mainly due to the co-resident RTS software trapping a run time constraint error and then printing a diagnostic message providing the line number of the package, thus indicating where the run time assignment was out of range. The final delivery had construct checking switched off, using a language pragmatism, which reduced the final object size by about 30 percent.

6.2.11 Attributes [11.2.2.9]

ISSUE: Should attributes be used in AIS software?

RATIONALE: The rationale was provided in the Appendix A guidance.

AVS Implementation: Wherever possible a data attribute was used. This meant that type and subtypes could be changed without the need to change the application code. The AVS therefore proved that this was a very cost effective construct.

6.2.12 Data Abstraction [11.2.2.10]

ISSUE: How should data abstraction techniques be applied to AIS software design

RATIONALE: The rationale was provided in the Appendix A guidance.

AVS Implementation: The development of data structures to provide the main control routes within the Ada code was important to the AVS software design selection. A good example of the abstraction of the requirement into suitable data structures is the PCE SMS processor Level 4 package CRITICAL_CONTROL_MESSAGE where enumeration types, records and arrays are all used together to describe all subaddress 11 interface states for a particular pylon station. The AVS experience shows that careful design of data structures can result in more readable and understandable code.

6.2.13 Portability [11.2.2.11]

ISSUE: How can AIS software be ported to different targets?

RATIONALE: The rationale was provided in the Appendix A guidance.

AVS Implementation: The AVS Ada processor reduced assembler inserts to a minimum. They were used for:

a. Fast hardware access (see Avionics RT access)
b. Bit manipulation (package BIT_FUNCTIONS)
c. Semaphore (package SEMAPHORE)
d. Some interrupt handling (see Avionics Processor)

In terms of overall percentage of target object code, these inserts were reduced to some three percent. The AVS implementation is therefore very portable.

6.2.14 Instruction Set Architectures [11.2.3]

ISSUE: Which computer Instruction Set Architectures (ISA) should be used in the AIS.

RATIONALE: The rationale was provided in the Appendix A guidance.

AVS Implementation: The AVS used the Motorola 68000 ISA for the main controlling units. This ISA proved to be well suited to the requirements of a modern avionics system using Ada.

6.2.15 Processing Power [11.2.4.1]

ISSUE: What typical processing power trends occur from implanting the LDD following the guidance in Section 11.1?

RATIONALE: The rationale was provided in the Appendix A guidance.

6.2.16 Code Memory [11.2.4.2.1]

ISSUE: How much extra code memory is required in the AIS?

RATIONALE: The benefits in terms of software size reduction, and therefore code memory reduction, resulting from the implementation of generic software will only be realized in systems using more than one MIL-STD-1760 store type. This is because generic software has an overhead and by its very nature it cannot be optimized to specific stores. The more store types used, the more software size benefits occur through the use of generic software.

AVS Implementation: All MIL-STD-1760 emulated mission stores (SRAAM, AGM, and BOMB) are controlled by one common control package (PCE SMS processor Level 4 package M1760_Store_Control) which calls generic software for message processing and safety critical store control. An overhead would be incurred if this scheme was used for a single store type, but combining all control for multiple store types in one package, yields software size, and therefore code memory size reductions.

6.2.17 Data Memory [11.2.4.2.2]

ISSUE: How much data memory is required for an AIS software design?

RATIONALE: It is not possible to provide absolute figures for the extra data memory requirements as it is very application dependent. However, the figure provided is likely based upon the size of data allocated in AVS.

AVS Implementation: AVS allocated one data word for every declared data entity code. It optimized the store description data structure to the information upload and held bitlog information for each RT and therefore each mission store.

6.2.18 Software Architectures [11.2.5]

ISSUE: What is the best overall software structure for an AIS implementation?

RATIONALE: The rationale was provided in the Appendix A guidance.

AVS Implementation: The AVS software responsible for system control in the PCE SMS is structured on a highly layered approach which is consistent with the guidance offered. Figure 6.2 shows the AVS PCE SMS package structure. This approach proved a very successful way of developing AIS software offering advantages in all phases of the software life cycle.

6.2.19 Reusable Software [11.2.6]

ISSUE: How can reuseable software be developed?

RATIONALE: Reuseability in software is only realized when generic software is developed. This is because only general purpose software built upon a standard protocol (such as the MIL-STD-1760 LDD) can be taken from one application to another. Store specific software is just that. It tends to intermate with application specific software and therefore cannot cost effectively be re-used.

AVS Implementation: Although the Ada generic package construct was not available, the software was designed to be general purpose and this proved that reusable software could be developed for many elements of the LDD.

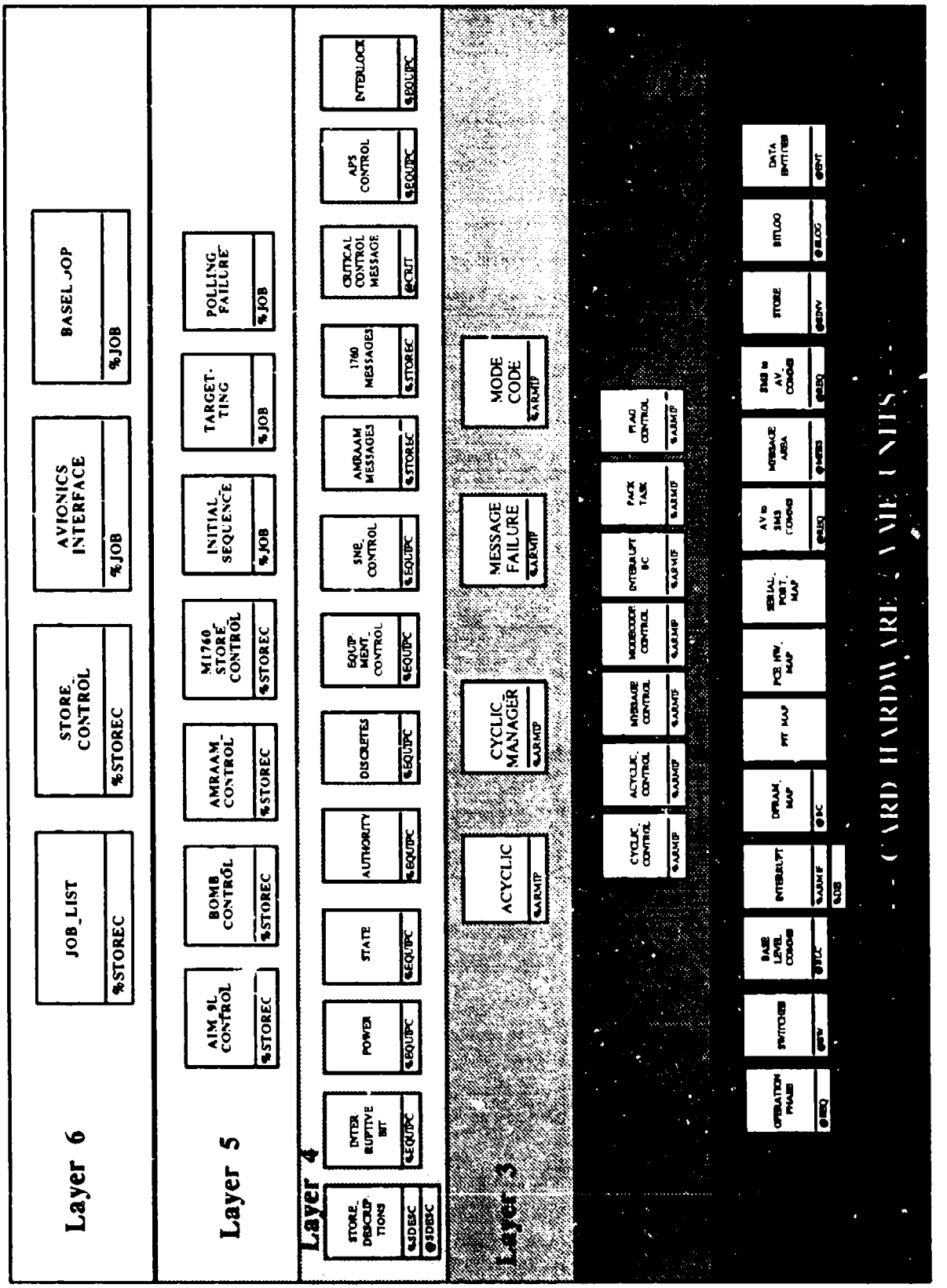

Figure 6.2 AVS Layered Implementation

6.2.20 Software Interfaces [11.2.7]

ISSUE: How many meaningful software interfaces can be developed?

RATIONALE: The rationale was provided in the Appendix A guidance.

AVS Implementation: Close inspection of the final PCE Ada code shows good use of data abstraction techniques and extensive case of meaningful names. This combination results in both readability and understandability that is built into the source code.

6.2.21 Program Support Environment [11.2.8]

ISSUE: Should a software support environment be used?

RATIONALE: The rationale was provided in the Appendix A guidance.

AVS Implementation: The AVS compiler, chosen since it was the only available VAX hosted and Motorola 68000 targeted cross compiler, was supplied with a very poor toolset and support environment. The software testing and integration suffered from this lack of available tools. The missing tools which had the most impact were: the Library Manager, Symbolic Debugger, and Good Quality Linker.

6.2.21.1 Library Manager It is the responsibility of a Library Manager to determine all compilation dependencies and initiate automatic recompilations if a source unit is changed which effects other units. This was not available during AVS Ada development and meant that it had to be done manually. This was both time consuming and resulted in errors. The overall effect was a reduction in productivity and an increase in maintenance costs.

6.2.21.2 Symbolic Debugger This facility allows tracing of Ada constructs which is achieved by the debugger having knowledge of the relationship between target code and the source code. It speeds up testing and debugging.

6.2.21.3 Good Quality Linker Such a Linker would supply address map information locating Ada constructs to physical addresses. This information is paramount if such debugging tools as Logic State Analyzers are to be used. The lack of this information during AVS software development significantly extended debugging times.

6.2.22 Software Configuration Control [11.2.9]

ISSUE: What type of Configuration Control environment should be used for control of AIS software?

RATIONALE: The rationale was provided in the Appendix A guidance.

AVS Implementation: No automated configuration control tools were used during AVS software development. A manual system was developed which was just about sufficient. However, for it to be successful it relies on the professionalism of the software engineer to follow the procedures.

7. RATIONALE FOR APPENDIX A SECTION 12

Paragraphs 7.1 through 7.6 of this section provide rationale to support the guidance given in paragraphs 12.1 through 12.3 of Appendix A.

7.1 Connectors [12.1]

ISSUE: What specific requirements of MIL-C-38999 should be reflected into other parts of the AIS not controlled by MIL-STD-1760?

RATIONALE: It is most likely that aircraft manufacturers will use the solution that, in the short term, may be lowest in cost. There is little doubt that using size 8 twinax contacts (MIL-C-39029 slash 90 and 91) will be more expensive than using, say, three size 22 power contacts in its place. Also, the increased weight penalty incurred by utilizing the extra screening potential of MIL-C-38999 Series III connectors will be viewed with some alarm. Nevertheless it is considered imperative that:

a. The same type of contacts called out in MIL-STD-1760 for the ASI are used throughout the rest of the AIS. This will afford the required impedance matching (vital for HB1 VSWR); screening (against susceptibility and radiation of noise); and also automatically control the cable which will be used, because the contact slash sheets detail the "acceptable" cable.

b. MIL-C-38999 connectors are used either throughout the AIS installation or, as a minimum, wherever the 360 degree screening afforded by these connectors is considered to be beneficial. This capability is obviously going to have significant advantages when dealing with composite structures.

7.2 Multiplex Data Bus Cable [12.2]

ISSUE: Should specific cable be used in the AIS installation?

RATIONALE: Should the advice given in paragraph 7.1 above be ignored and MIL-C-39029 slash sheets 90 and 91 contacts not be used, then cable "control" will be lost. There are other costly types of cable available which would give reasonable electrical compatibility, but are usually not approved and are of doubtful mechanical structure.

7.3 High Bandwidth Cable [12.3]

ISSUE: Should specific cable be used in the AIS installation?

RATIONALE: The rationale was provided in the Appendix A guidance and no further rationale is necessary.

7.4 Release Consent and Interlock Cables [12.4]

ISSUE: No applicability.

7.5 Address Line Cable [12.5]

ISSUE: No applicability.

7.6 Power Cable [12.6]

ISSUE: No applicability.

8. RATIONALE FOR APPENDIX A SECTION 13

Paragraphs 8.1 through 8.19 of this section provide rationale to support the guidance given in paragraphs 13.1.1 through 13.3 of Appendix A. Issue statements may be summarized. Where rationale was supplied in the guidance text and further provision considered superfluous, then extra rationale is not supplied.

8.1 Connectors [13.1.1]

ISSUE: Should the MIL-STD-1760 connectors be fitted on the first available opportunity?

RATIONALE: Delaying the fitting of the ASI connectors will be of little or no benefit and in fact could cause an unnecessary delay in any future modification program. It is very obvious that a major milestone in any modification program is that area connected with the initial fit, or change, of any hardware. If the aircraft, or its pylons, is "opened up" for modification, then that opportunity should be utilized to complete the installation of MIL-STD-1760 ASI connectors and any associated wiring, the latter may have to be "tied back" at any appropriate LRU interfaces.

ISSUE: Could some, or all, of the existing connectors be superseded by the MIL-STD-1760 connector?

RATIONALE: There are two major reasons for considering this topic:

a. Removing the current connectors from the aircraft/pylon structure, will yield real estate which could be vital in the fitting of MIL-STD-1760 ASIs.

b. A "standard" umbilical could be realized in a much shorter timescale.

There are two major problems which may legislate against such an installation:

a. The logistics of having post mod aircraft without post-mod stores or post-mod only stores against pre-mod aircraft. It should be noted that although special to type umbilicals, that is MIL-STD-1760 ASI compatible at one end and store specific at the other, may go some way in alleviating this problem, it would be a very expensive solution unless easily modifiable umbilicals were constructed.

b. Real estate would need to be found, either in the pylon or the aircraft, for the LRU which is to control the switching and or rerouting of these existing signals.

In spite of the disadvantages discussed above it is still recommended that each store/aircraft interface be studied in its own right and accepted or rejected on its own merits. A specific policy can then be established for each aircraft which can be defended, rather than have a blanket decision which, almost certainly, could not.

ISSUE: Where should the ASI be fitted.

RATIONALE: The rationale was provided in the Appendix A guidance and no further rationale is necessary.

8.2 Power Installation [13.1.2.1]

ISSUE: What 28V DC wire will already be fitted and useable?

RATIONALE: The rationale was provided in the Appendix A guidance and no further rationale is necessary.

ISSUE: What 115V AC wire will already be fitted and useable?

RATIONALE: The rationale was provided in the Appendix A guidance and no further rationale is necessary.

ISSUE: What initial Auxiliary power capability will there be?

RATIONALE: All of the information currently available indicates that the auxiliary power capability is unlikely to be required. Before any commitment is made to even start design, never mind installation, of the auxiliary power signal set, that is a Class IA or IIA ASI, the justification for the requirement must be fully examined. This is because such an installation will require a second ASI connector and associated cable. The real estate required for such an installation will be a heavy burden to bear, as will the consequent aircraft weight increase, unless adequate justification is provided.

ISSUE: Will Auxiliary Interlock be required and available?

RATIONALE: The rationale was provided in the Appendix A guidance and no further rationale is necessary.

8.3 Multiplex Data Bus Installation [13.1.2.2]

ISSUE: What aircraft are likely to have this installation already in place?

RATIONALE: The rationale was provided in the Appendix A guidance and no further rationale is necessary.

ISSUE: Should this be a classic bus layout?

RATIONALE: Refer to section 5 of this document for further detailed rationale on this subject.

8.4 Multiplex Data Bus Address Installation [13.1.2.3]

ISSUE: What aircraft are likely to have this installation already in place?

RATIONALE: The rationale was provided in the Appendix A guidance and no further rationale is necessary.

ISSUE: What part of the aircraft is affected?

RATIONALE: The rationale was provided in the Appendix A guidance and no further rationale is necessary.

8.5 Low Bandwidth Installation [13.1.2.4]

ISSUE: What aircraft are likely to have this installation already in place?

RATIONALE: The contact and therefore cable, provided in MIL-STD-1760 for this signal, is a pin surrounded (360') by two rings. It is intended that the active signal (HI) be carried on the pin, with the return (LO) being carried on the first ring. This leaves the second outer ring for a

screen and altogether this provides for a twisted pair with overall screen cable, that is the same contact as required for the Multiplex Data Bus. Currently such a facility is typically used for the rather raw target acquired audio signal from the AIM-9 missile, but fed to the aircraft via a single wire with an overall grounded screen, that is HI via the wire and LO via the screen. While little change of usage is envisaged in the short term, there are long term considerations for using this interface for Low Speed Digital Signals (LSDS) with low cost (electronics) stores. The current installations discussed above would be totally inadequate for use with the LSDS, whereas the installation required by MIL-STD-1760 would be more than adequate for both the LSDS and AIM-9 audio. Note that the AIM-9 audio installation is a point to point requirement and this is also the type of installation envisaged for the LSDS, thereby avoiding the requirement for bus network address lines.

8.6 High Bandwidth Installation [13.1.2.5]

ISSUE: Will existing cable be suitable?

RATIONALE: The rationale was provided in the Appendix A guidance and no further rationale is necessary.

8.7 Interlock Line Installation [13.1.2.6]

ISSUE: Is Interlock a positive requirement?

RATIONALE: The rationale was provided in the Appendix A guidance and no further rationale is necessary.

ISSUE: Must the Interlock Return be isolated.

RATIONALE: The rationale was provided in the Appendix A guidance and no further rationale is necessary.

8.8 Release Consent Installation [13.1.2.7]

ISSUE: Are straight installation rules specified for this signal?

RATIONALE: Unfortunately many people distrust the use of digital data for the transmission of safety critical commands and this actually includes the generation of such commands by the processor. Furthermore, although it can be shown that the risk of the false generation of a safety critical message (which will pass all checking and therefore be acted upon) is very low, such figures as these seem to be beyond comprehension and are consequently also completely mistrusted. In order that the flexibility of digital data can be retained, but that it becomes "safety related" not "safety critical," the use of a discrete (which must accompany such data) has been mandated. That discrete, now a nominal 28V DC line capable of a current drain up to 100 milliamperes, is called Release Consent and is mandated for use whenever bits D8 and/or D10 of the Critical Control 1 word (MIL-STD-1760A Table B.XXXII) are set to Logic 1. Use at other times is at the discretion of the store, but the aircraft must be capable of complying with such a demand. It is this rationale which has led to the guidance that Release Consent should not to be software generated (where this includes the use of a data highway for transmission of any generation), but may be software steered (where this includes the use of a data highway for transmission of steering instructions), such as in a multi (rail launch) store carriage store.

8.9 Bus Controller [13.1.3.1]

ISSUE: Should a separate MIL-STD-1760 bus be installed?

RATIONALE: The rationale was provided in the Appendix A guidance and no further rationale is necessary.

8.10 Avionic to SMS Digital Interface [13.1.3.2]

ISSUE: How should "Avionics Data" be transferred into stores?

RATIONALE: The rationale was provided in the Appendix A guidance and no further rationale is necessary.

8.11 Digital Control [13.1.3.3]

ISSUES: What sort of aircraft modifications are required on partially digital AIS or SMS and aircraft which have as yet, no digital AIS or SMS?

RATIONALE: It is most unlikely that a single processor will be able to cope with the duties of a Bus Controller, Stores Management System Manger and be responsible for the processing requirements of assembling the data entity words into the correct order (this assumes that the data entity arrived from the Avionics Bus using MIL-HDBK-1553 message and data word formats) for the various weapon on any one mission. It is, however, expected that two processors could cope quite adequately and this then leaves the question of partitioning the "duties" described above. Obviously software partitioning of safety critical and non-safety critical functions form a basic requirement on any decision, which means that the partitioning falls into:

a. Processor 1 - SMS Management
b. Processor 2 - Bus Controller and message construction

8.12 Bandwidth Switching [13.1.3.4]

ISSUE: What bandwidth switching is likely to be available on current aircraft?

RATIONALE: The rationale was provided in the Appendix A guidance and no further rationale is necessary.

8.13 Power Control [13.1.3.5]

ISSUE: Do 28V DC Power 1 and 28V DC Power 2 channels require separate control?

RATIONALE: Because 28V DC 2 is the supply determined, by MIL-STD-1760, for use on DC controlled safety critical store functions, then the time for which it will be available to any store(s) is likely to be very small and rightly so. This is not the case for 28V DC 1, which is a general purpose supply and this factor alone dictates a separated switching policy.

ISSUE: Why and when does the 115V AC channel require deadfacing?

RATIONALE: The rationale was provided in the Appendix A guidance and no further rationale is necessary.

ISSUE: Is power capacity likely to be adequate?

RATIONALE: MIL-STD-1760 only demands a specific capacity at any one ASI, which is:

a. 28V DC - 20 amperes to be available for Class I and II; and 30 amperes to be available for Class IA and IIA.

b. 115V AC - 10 amperes per phase to be available for Class I and II; and 30 amperes per phase to be available for Class IA and IIA.

Note: The 30 ampere figure is the maximum consumable across both primary and auxiliary signal sets together.

The capacity requirements for how many ASIs should be energized at any one time, is not controlled by MIL-STD-1760, because this is obviously aircraft type dependent and also probably varies across build block of any one type. The capacity requirement for switching is likely to need expansion in order to cope with the 28V DC 1 and 28V DC 2 separation rules and also the "deadfacing" requirements levied against the 115V AC.

8.14 Interlock/Release Consent Circuitry [13.1.3.6]

ISSUE: Should Interlock interrogation be implemented?

RATIONALE: The rationale was provided in the Appendix A guidance and no further rationale is necessary.

ISSUE: Should Interlock be used for deadfacing power to the connector?

RATIONALE: For the 115V AC power supply, the current practice of deadfacing via the interlock must cease in order to be compliant with MIL-STD-1760. The same technical reasoning cannot be applied to the DC power lines, although it most certainly will, if the 270V DC power line is ever implemented, but it is considered to be bad engineering practice to disconnect "hot" connectors and even worse practice to connect "hot" connectors. In the latter case, unless the mating is 100% clean, current spiking will occur on both the interlock line (this will almost certainly be highly inductive) and the 28V DC 1 line.

ISSUE: What circuitry is required for Interlock?

RATIONALE: The rationale was provided in the Appendix A guidance and no further rationale is necessary.

ISSUE: What circuitry is required for Release Consent?

RATIONALE: See paragraph 8.8 of this document, in association with the rationale in 13.1.2.7.

8.15 Avionic Interface [13.1.4]

ISSUE: What avionic data does MIL-STD-1760 demand from the aircraft?

RATIONALE: The rationale was provided in the Appendix A guidance and no further rationale is necessary.

8.16 Positive Testing [13.2.1.]

ISSUE: What part(s) of the MIL-STD-1760 installation should be candidates for positive testing?

RATIONALE: Basically one needs to look at those parts of the system which will require system integration, that is where different equipment have to live mutually with and without each other. This is obviously a main criteria for bus networking and that is why the three that appear in Appendix A were chosen. The power lines were included as a possible extra only for consideration against potential voltage drop on larger aircraft, that is testing to ensure that the correct wire gauge was chosen by the designer.

8.17 Verification by Inspection [13.2.1.2]

ISSUE: What part(s) of the MIL-STD-1760 installation could be considered for design verification?

RATIONALE: See paragraph 8.16 of this document, in association with the rationale in 13.2.1.1.

8.18 EMC [13.2.1.3]

ISSUE: What EMC testing, if any, should be considered?

RATIONALE: See paragraph 7.1 of this document, especially that part on cost cutting, in association with the rationale in [13.2.1.3], that is the less active screening fitted in the installation the more important becomes the depth of EMC testing.

8.19 Phased MIL-STD-1760 Implementation [13.1]

ISSUE: What part of the installation should be implemented first?

RATIONALE: The rationale was provided in the Appendix A guidance and no further rationale is necessary.

U.S. Government Printing Office 1991—648-126/60051