Type

EXERCISE: 1

SELECT THE CORRECT VIEWS

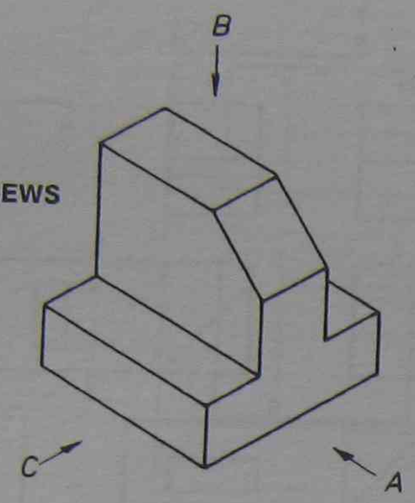

Which drawing shows the view from direction A?	A
Which drawing shows the view from direction B?	B
Which drawing shows the view from direction C?	C

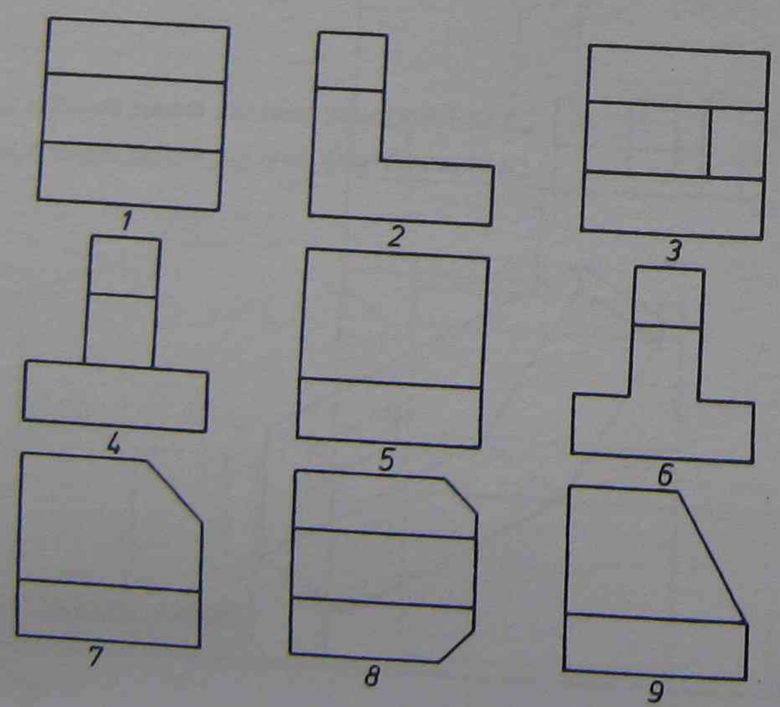

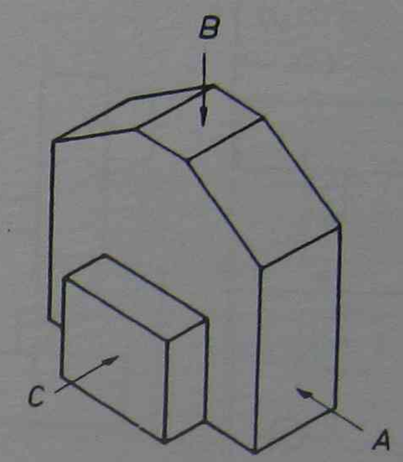

Which drawing shows the view from direction A?	A
Which drawing shows the view from direction B?	B
Which drawing shows the view from direction C?	C

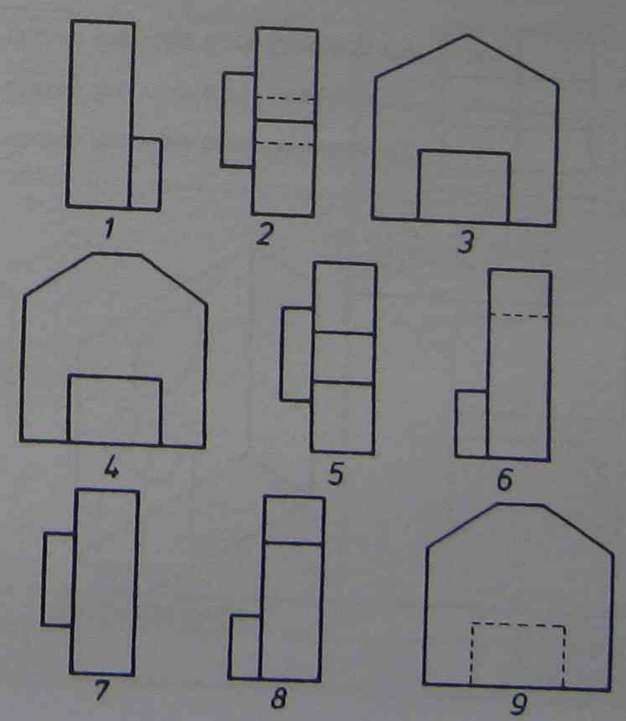

they
ther

DRAWINGS AND DIAGRAMS FOR ELECTRICAL WORK

STUDENT WORKBOOK

MA NUE 062

First published by
Manufacturing and Engineering Educational Services
NSW TAFE Commission
PO Box 218 Bankstown NSW 2200

This work is copyright. Any inquiries about the use of this material should be directed to the publisher.

© New South Wales Technical and Further Education Commission

2001

DRAWINGS AND DIAGRAMS FOR ELECTRICAL WORK
NUEYYY

FEEDBACK

We value your opinion and welcome suggestions on how we could improve this resource manual. Keep in mind that the manual is intended to help students learn and is not a text book.

Send your comments and suggestions to:
Garry Durrant
Program Manager
Electrical/Electronics Control and Communications
Manufacturing and Engineering Educational Services
PO Box 218
Bankstown NSW 2200
Fax: 02 9790 7003
Email: garry.durrant@tafensw.edu.au

INTRODUCTION 1

1. MECHANICAL DRAWING INTERPRETATION 2

REVIEW QUESTIONS 2

2. ORTHOGONAL AND PICTORAL DRAWING 2

REVIEW QUESTIONS 2

3. BUILDING STRUCTURES, MATERIALS AND SEQUENCING 2

REVIEW QUESTIONS 2

4. ARCHITECTURAL DRAWINGS 2

REVIEW QUESTIONS 2

5. ELECTRICAL DRAWINGS 2

REVIEW QUESTIONS 2

6. CIRCUIT DIAGRAMS 2

PRACTICAL EXERCISE: SWITCHING CHARTS 2

REVIEW QUESTIONS 3

7. LIGHTING CIRCUITS 1 2

PRACTICAL EXERCISE: THE LOOP AT THE LIGHT METHOD OF WIRING 2

REVIEW QUESTIONS 3

8. LIGHT CIRCUITS 2 2

PRACTICAL EXERCIXE: THE LOOP AT THE SWITCH METHOD OF WIRING 2

REVIEW QUESTIONS 3

SAMPLE THEORY TESTS 7

SAMPLE THEORY TEST 1 7

SAMPLE THEORY TEST 2 7

SAMPLE PRACTICAL TEST 1 7

SAMPLE PRACTICAL TEST 2 7

ANSWERS 11

REVIEW QUESTIONS 11

SAMPLE PRACTICAL TEST 1

SAMPLE PRACTICAL TEST 2 7

Resources and references

Engineering Drawing Handbook SAA HB7 – (latest edition)
Electrical and Electronic Drawing Practice for Students HB 3:1996
A W Boundy. *Engineering Drawing 5th Edition*, McGraw Hill, 1996
J.F. Lowe, *Drawing for Electrical Trades 2nd Edition*, McGraw Hill, 1988
Basic Training Manual 16-11 *Electrical Trades Building Structures*, 1982
NBB12 Engineering Drawing Interpretation, Manufacturing & Engineering Division
EA061 Engineering Graphics, Manufacturing & Engineering Division
EA701 Engineering Drawing (Detail) Manufacturing & Engineering Division
Australian Standard 1100 – Technical Drawing series
Australian Standard 1101 – Graphical Symbols series
Australian Standard 1102 – Graphical Symbols for Electrotechnical Documentation series

Introduction

This resource manual contains learning exercises, review questions and sample assessment instruments. It is designed to assist students achieve the outcomes and purpose described in the national module descriptor ***NUE062*** and is an example of the depth and breadth of learning expected.

The topics listed in the content are arranged in the preferred learning sequence. It is recognised that this is not the only sequence in which the material could be learnt. Assessment arrangements and sample assessment instruments are based on the sequence of topics listed above. A teacher may decide that for a particular student or group of students it is more effective to present the topics in a different sequence. In this case the students must be informed in writing of the resulting changes in the assessment events before starting the module.

Learning plan

The following topic weighting will help you plan and allocate the effort needed to achieve the purpose and outcomes of the module.

Topic		*Weighting %*
1.	Mechanical drawing interpretation	10
2.	Orthogonal and pictorial presentation	15
3.	Building structures, materials and sequencing	15
4.	Architectural drawing	10
5.	Electrical drawings	10
6.	Circuit diagrams	15
7.	Lighting circuits 1	15
8.	Lighting circuits 2	10

1. Mechanical Drawing Interpretation

Purpose

In this topic you will learn how to use engineering drawings and the importance of standards and conventions used to allow the interpretation of the information they contain

Objectives

At the end of this topic you should be able to:

- State the reasons for technical drawing standards
- Apply conventions and specifications to AS 1100
- List the types and functions of engineering drawings
- List drawing sheet types and sizes
- State the information contained in a typical title block
- Identify and produce line types used on engineering drawings
- Dimension a drawing using common dimensioning features
- Determine the correct scale to use for drawing objects of various sizes.
- Identify welding symbols used on engineering drawings

Purpose of Drawings in Industry

There are three main reasons for drawing in industry:

- **Communication**

  Engineering drawing is the main method of communication between all people concerned with the design and manufacture of components, building and constructions, and engineering projects

- **Discussion**

  Developing ideas and theories and discussing them with colleagues. For instance a manufacturer might discuss the problems of a manufacturing process with an engineer

- **Records**

  Drawings are kept for:
  a) extra orders of components
  b) recording previous specifications
  c) records of current job specifications in case of faulty manufacture or design

Types and functions of engineering drawings

The basic engineering drawings are:

- assembly
- sub-assembly
- detail assembly
- detail
- Pictorial

Assembly drawings

Assembly drawings show a general overview of the complete job, with arrangements of parts and a list of parts. They are sometimes called general assemblies. They only show overall dimensions.

Sub-assembly drawings

Sub-assembly drawings only show the arrangement of a particular part, or a few parts, of the general assembly. They do not show any fabrication details. Sub-assembly drawings show how a part of the job is assembled, not fabricated

Detail assembly drawings

Detail assembly drawings show how the job is assembled, together with all the details you need to manufacture it.

Detail drawings

Detail drawings show all the details you need to do the job. They generally only show a part of the job, and do not show the complete assembly of the finished product.

Pictorial drawings

These can take the form of either isometric, oblique, perspective or exploded and can be assembly, sub-assembly or detail. They are not recommended for manufacturing purposes, but provide a picture.

DO NOT SCALE
ALL DIMENSIONS IN MILLIMETRES

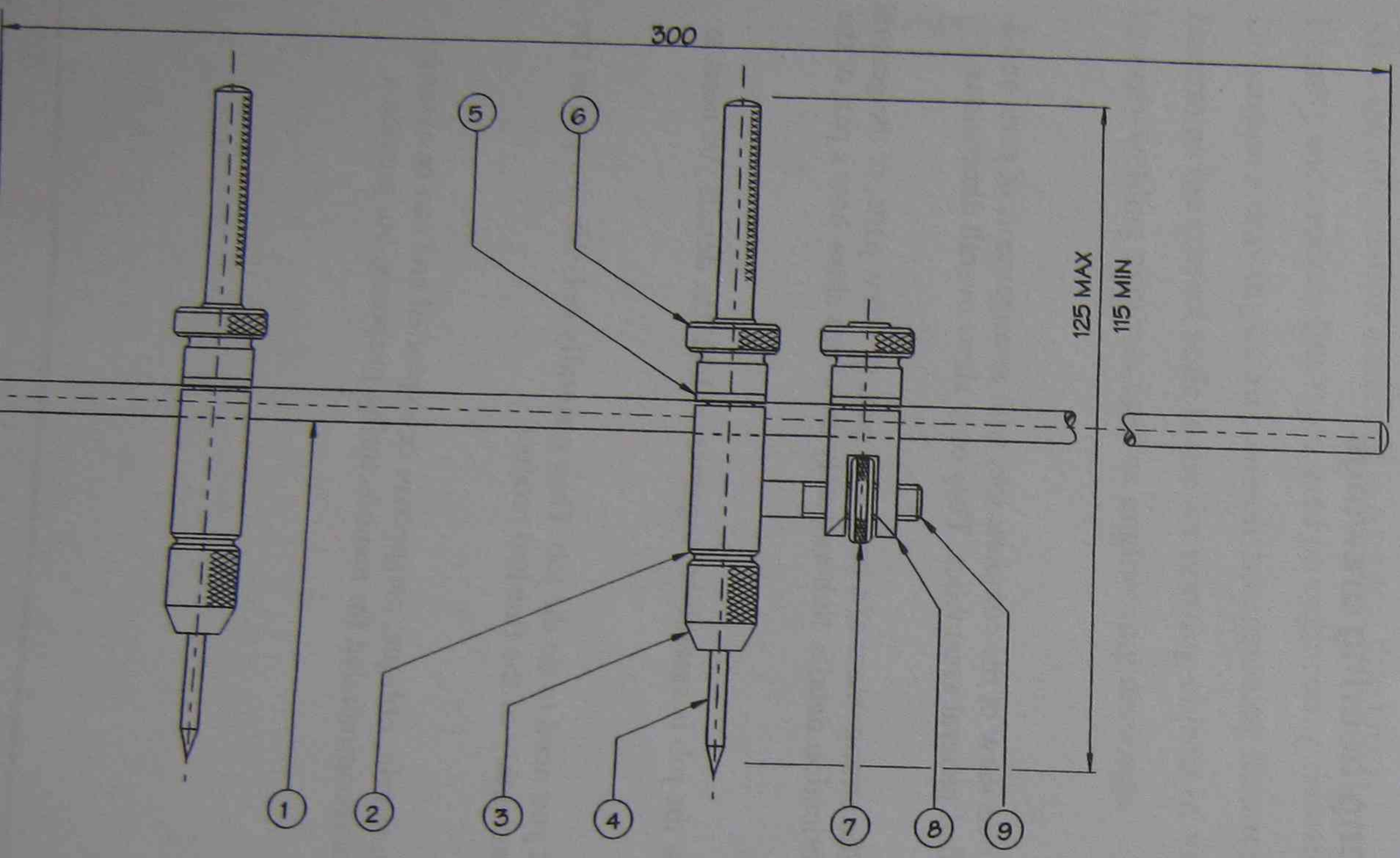

ASSEMBLY

AN ASSEMBLY DRAWING

IT SHOWS THE TRAMMEL ASSEMBLED. THERE ARE NO DIMENSIONS OR DETAILS THAT ALLOW EACH COMPONENT TO BE MADE. OVERALL SIZES HAVE BEEN SHOWN.

THE SHEET CONTAINS A PARTS/MATERIAL LIST. IT IS SHEET 1 OF 2, INDICATING THAT THERE IS A SECOND SHEET THAT CONTAINS THE DETAIL DRAWINGS.

ITEM	DESCRIPTION	No OFF	REF DRWG No	MATERIAL
9	ADJUSTING SCREW	1	124 SHT 2 ITEM 9	
8	" BLOCK	1	124 SHT 2 ITEM 8	
7	" NUT	1	124 SHT 2 ITEM 7	
6	NUT - TRAVERSE LOCKING	3	124 SHT 2 ITEM 6	
5	WASHER	3	124 SHT 2 ITEM 5	
4	SCRIBER	2	124 SHT 2 ITEM 4	
3	NUT	2	124 SHT 2 ITEM 3	
2	LEG	2	124 SHT 2 ITEM 2	
1	BEAM	1	124 SHT 2 ITEM 1	

2 - 98		ISSUED FOR PRODUCTION			
TE	ZONE	CHANGES	ECN	BY	CKD
		AMENDMENTS		JD	WL

UNLESS NOTED OTHERWISE TOLERANCES ARE:
LINEAR N/A
ANGULAR N/A
DRAWN TO AS1100

MATERIAL N/A
FINISH N/A

DRAWN WL
TRACED ——
CHECKED JD
APPROVED AS
ISSUED 22-12-98
RECORD OF ISSUE
A

MANUFACTURING & ENGINEERING ESD
TITLE: TRAMMEL

SCALE	SIZE	DRAWING No.	SHT
NTS	A3	124	1 OF 2

DO NOT SCALE
ALL DIMENSIONS IN MILLIMETRES

THIS IS AN EXAMPLE OF A GENERAL ASSEMBLY DRAWING SHOWING A DUCT SYSTEM.

ISSUE	DATE	ZONE	CHANGES	ECN	BY	CKD

AMENDMENTS

DRAWN TO AS1100

FINISH N/A

NTS | A3 | 124 | SHT 1 OF 2

DO NOT SCALE
ALL DIMENSIONS IN MILLIMETRES

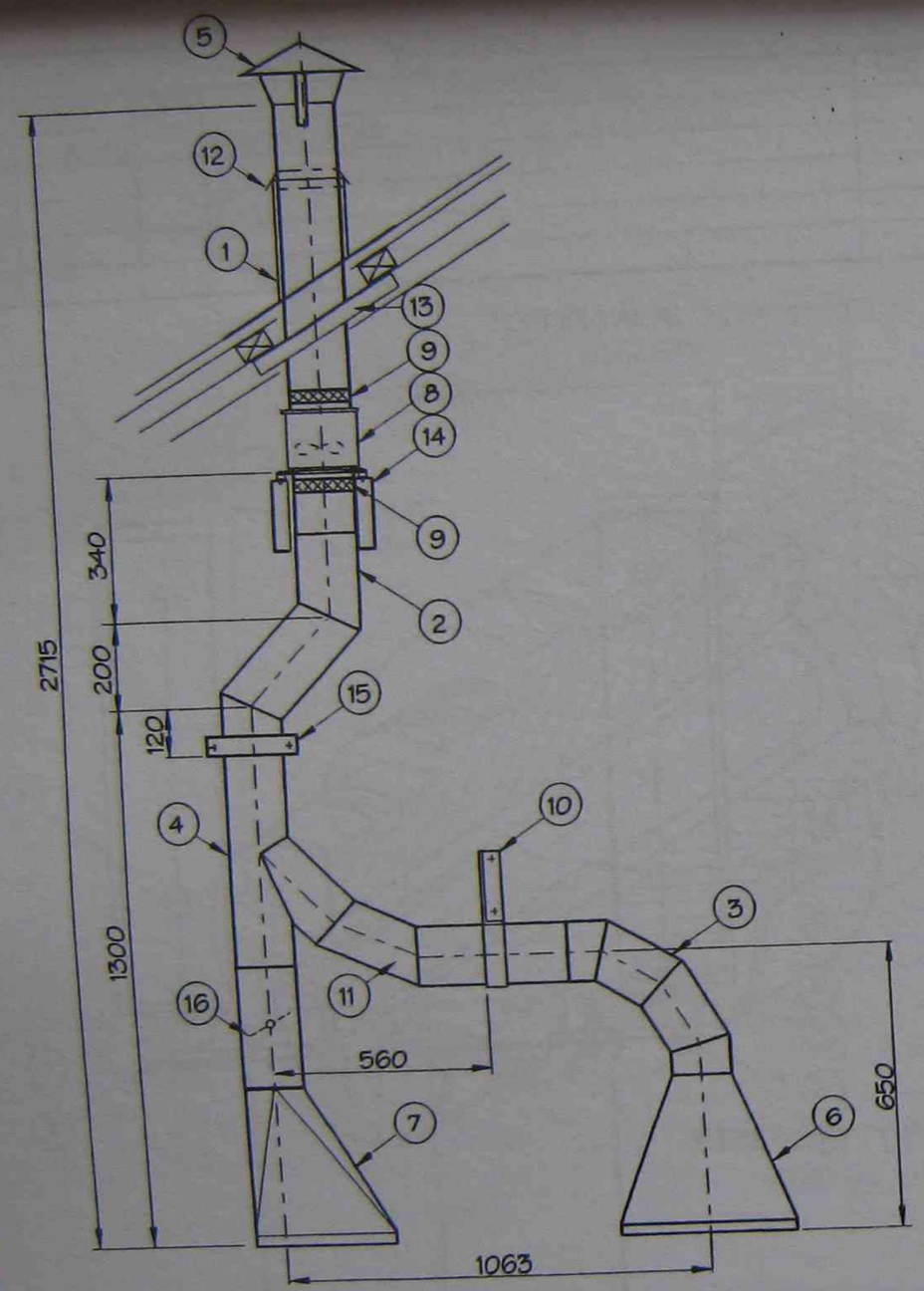

THIS IS AN EXAMPLE OF A GENERAL ASSEMBLY DRAWING SHOWING A DUCT SYSTEM.

IT GIVES A LIST OF THE PARTS AND THE OVERALL DIMENSIONS NECESSARY TO INSTALL THE DUCT FULLY.

NOTE: DIMENSIONS GIVEN DO NOT ENABLE YOU TO MANUFACTURE THE PARTS.

NOTE: AXIAL FAN WESTINGHOUSE 9497-1 AVAILABLE FROM CREST ENGINEERING, STANDARD HOT DIP GAL FINISH

PART No	DESCRIPTION	QTY	REMARKS	PART No	DESCRIPTION	QTY	REMARKS
9	FLEXIBLW JOINT	1	DRG 382 ITEM 1				
8	AXIAL FAN	1	PURCHASE SEE NOTE				
7	RECTANGULAR ROUND HOOD	1	DRG 380 ITEM 1	16	DAMPER	1	DRG 330 ITEM 2
6	CONICAL HOOD	1	DRG 330 ITEM 3	15	DUCT SUPPORT	1	DRG 332 ITEM 3
5	COWL	1	DRG 381 ITEM 1	14	FAN SUPPORT SUB-ASSY	1	DRG 325
4	ANGULAR BRANCH	1	DRG 329 ITEM 1	13	DUCT SUPPORT	1	DRG 333
3	4-PIECE, 90° ROUND ELBOW	1	DRG 326 ITEM 3	12	APRON	1	DRG 332 ITEM 4
2	ROUND OFFSET	1	DRG 326 ITEM 2	11	DUCT	1	DRG 329 ITEM 2
1	CYLINDRICAL FLASHING	1	DRG 326 ITEM 1	10	DUCT SUPPORT	1	DRG 332 ITEM 2

PARTS LIST

ISSUE	DATE	ZONE	CHANGES	ECN	BY	CKD
1	05 - 01 - 97		FIRST ISSUED		BS	WW

AMENDMENTS

UNLESS NOTED OTHERWISE TOLERANCES ARE:
LINEAR N/A
ANGULAR N/A

DRAWN TO AS1100

MATERIAL N/A

FINISH N/A

DRAWN BS
TRACED
CHECKED WW
APPROVED IB
ISSUED

RECORD OF ISSUE
A

MANUFACTURING & ENGINEERING ESD

TITLE: EXHAUST DUCTING ASSEMBLY

SCALE	SIZE	DRAWING No.	SHT
NTS	A3	324	1

TAFE

DO NOT SCALE
ALL DIMENSIONS IN MILLIMETRES

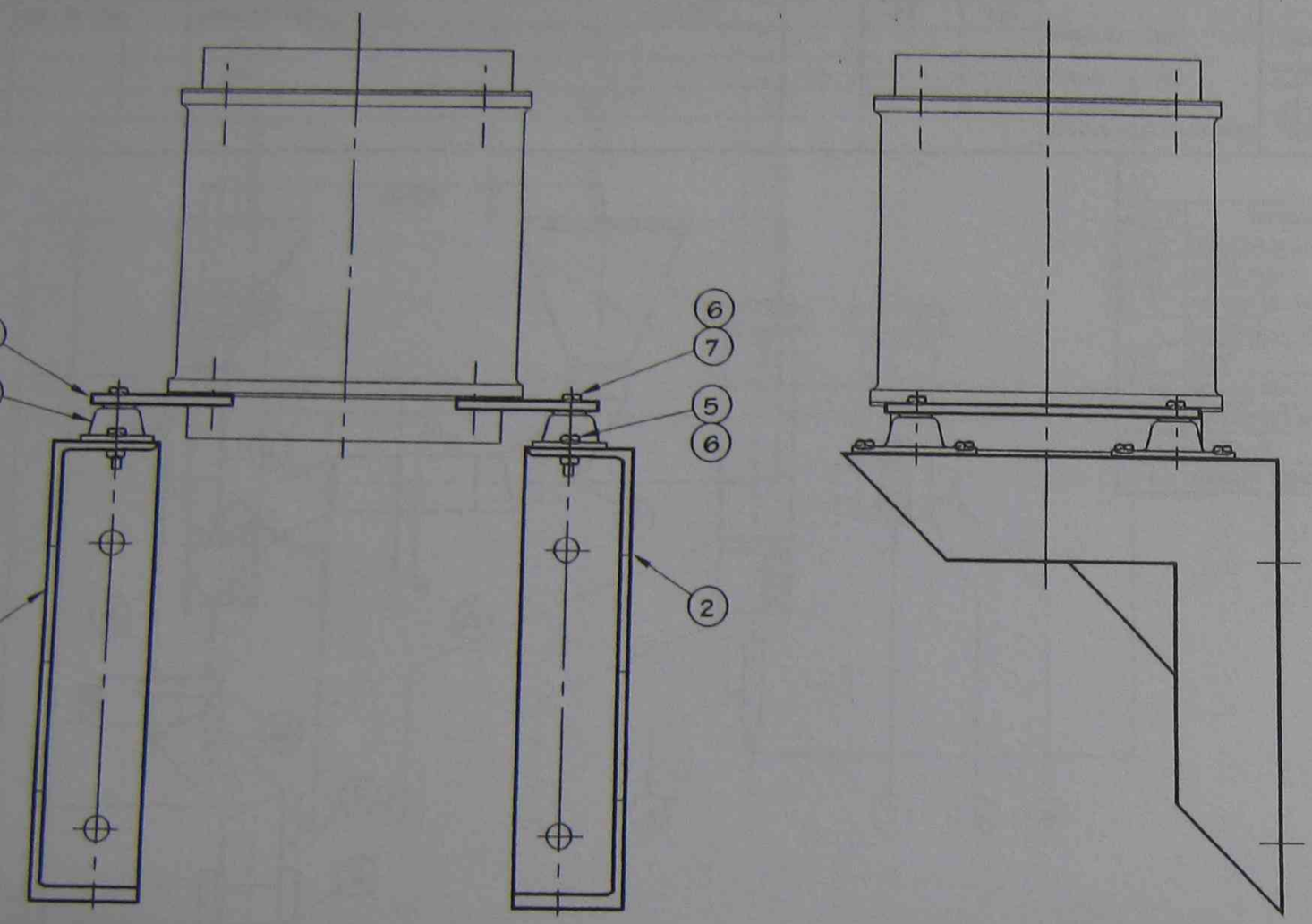

THIS IS AN EXAMPLE OF A

SUB ASSEMBLY DRAWING

IT GIVES SUB ASSEMBLY INFORMATION FOR THE FAN SUPPORT, ITEM NUMBER 14 SHOWN ON DRAWING NUMBER 324. IT LISTS THE PARTS NEEDED AND ILLUSTRATES THE METHOD FOR CONNECTING THE FAN TO ITS SUPPORT BRACKETS.

NOTE: NO DIMENSIONS ARE NECESSARY

ITEM No	DESCRIPTION	QTY	MATL	SIZE
7	BOLT	4	MS	MS. HEX HD x 20 LG
6	NUT	12	MS	MS. HEX
5	SCREW	8	MS	MS. HEX HD x 15 LG
4	ANTI-VIBRATION MOUNTING	4	—	TYPE 6/47 SCRUTTONS
3	MOUNTING PLATE	2	MS	SEE DRAWING 328
2	BRACKET R.H.	1	MS	SEE DRAWING 327/2
1	BRACKET L.H.	1	MS	SEE DRAWING 327/1

MATERIAL LIST

DATE	ZONE	CHANGES	ECN	BY	CKD
5 - 10 - 97		ORIGINAL ISSUED		JD	WL

AMENDMENTS

UNLESS NOTED OTHERWISE TOLERANCES ARE:
LINEAR N/A
ANGULAR N/A

DRAWN TO AS1100

MATERIAL N/A

FINISH N/A

DRAWN JB
TRACED
CHECKED WW
APPROVED IB
ISSUED 25-10-97

RECORD OF ISSUE

A				

MANUFACTURING & ENGINEERING ESD

TITLE: EXHAUST DUCT FAN SUPPORT ASSEMBLY

SCALE	SIZE	DRAWING No.	SHT
NTS	A3	325	1 OF 1

DO NOT SCALE
ALL DIMENSIONS IN MILLIMETRES

FLAT VALVE

DO NOT SCALE
ALL DIMENSIONS IN MILLIMETRES

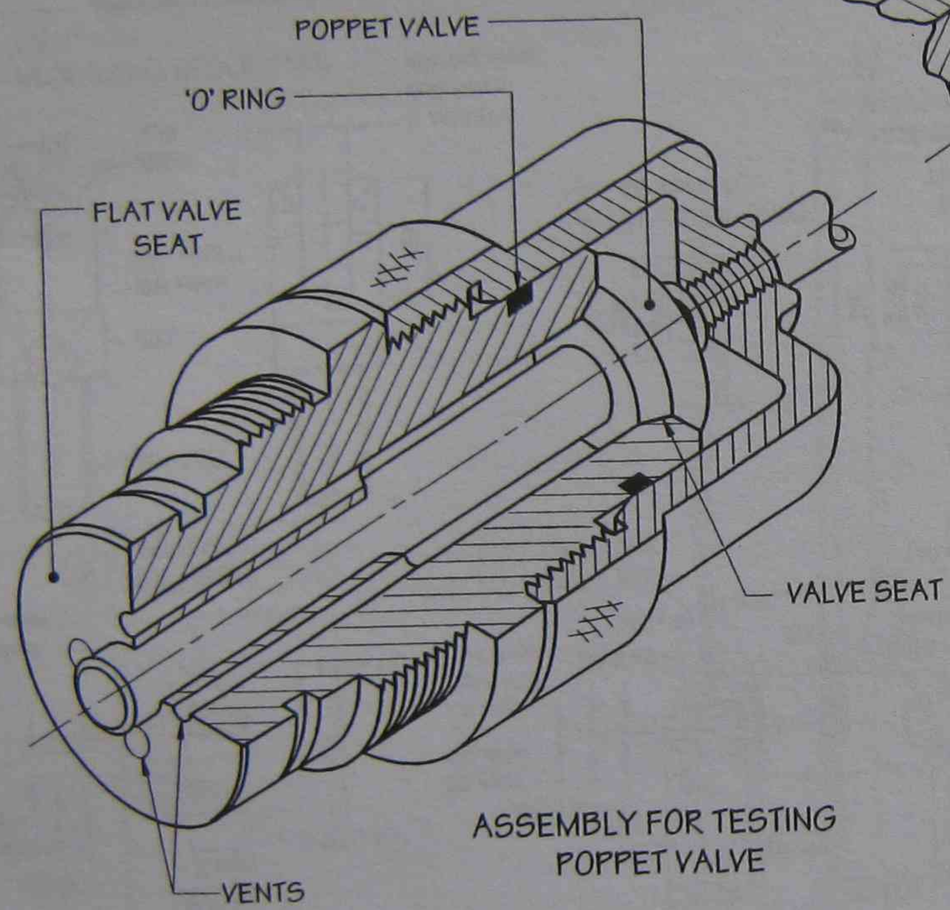

ASSEMBLY FOR TESTING POPPET VALVE

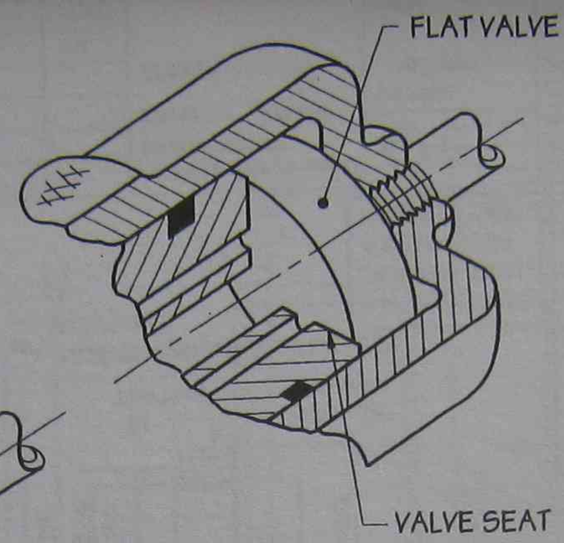

DETAIL OF FLAT VALVE TEST

This is an example of a pictorial drawing.

Note: Some parts are shown 'cut away' or 'in section'. Ask your teacher to identify the cross hatching and its purpose.

ISSUE	DATE	ZONE	CHANGES	ECN	BY	CKD
A	25 - 01 - 98		FIRST ISSUED		JB	LR

AMENDMENTS

UNLESS NOTED OTHERWISE TOLERANCES ARE:
LINEAR N/A
ANGULAR N/A

DRAWN TO AS1100

MATERIAL N/A

FINISH N/A

DRAWN JB
TRACED
CHECKED LR
APPROVED PW
ISSUED 12- 01 - 98
RECORD OF ISSUE
A

MANUFACTURING & ENGINEERING ESD

TITLE: POPPET VALVE

SCALE	SIZE	DRAWING No.	SHT
NTS	A3	99 - 641	1 OF 1

TAFE

DO NOT SCALE

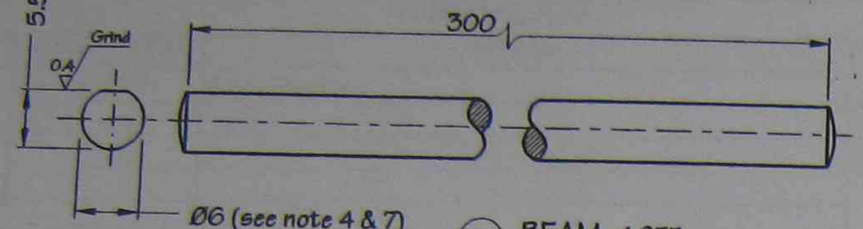

1 BEAM - 1 OFF
MAT'L: SILVER STEEL

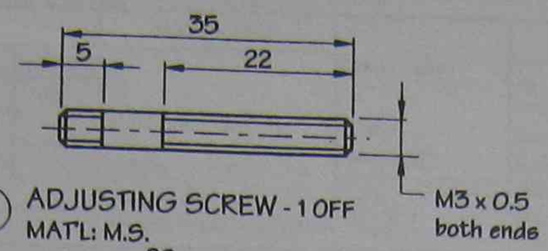

9 ADJUSTING SCREW - 1 OFF
MAT'L: M.S.

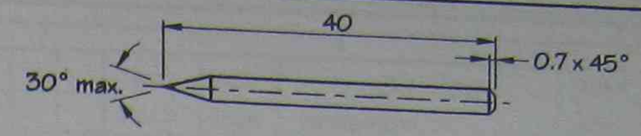

4 SCRIBER - 2 OFF
MAT'L: Ø3 H.S.S. OR SILVER STEEL
HARDEN AND TEMPER

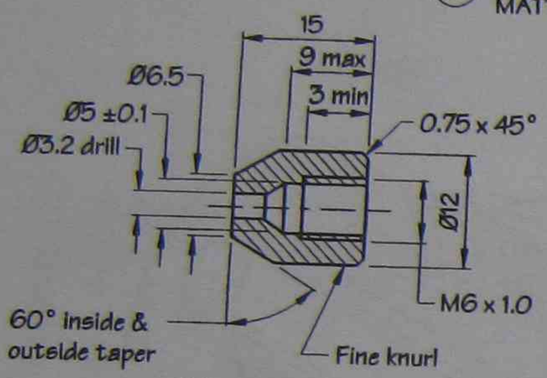

3 NUT - 2 OFF
MAT'L: M.S.

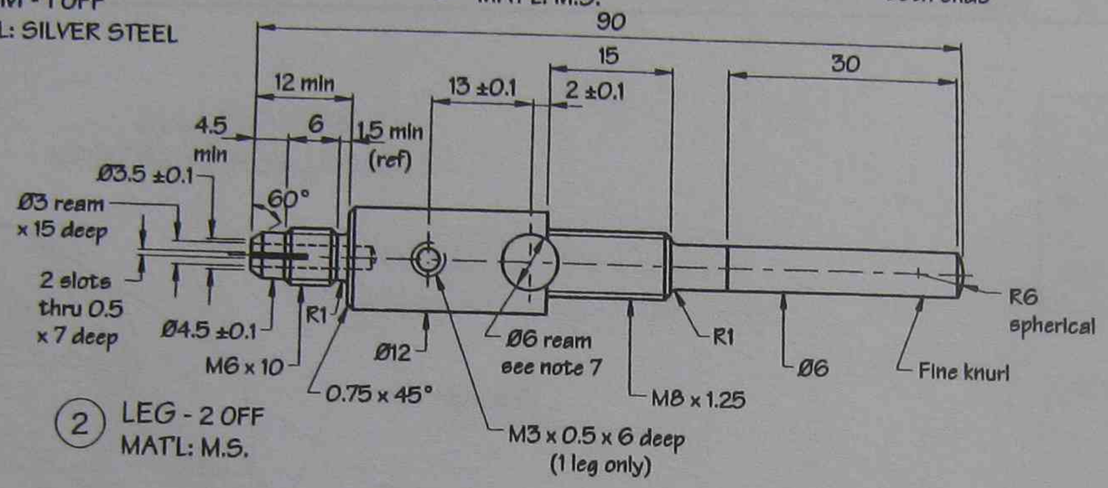

2 LEG - 2 OFF
MAT'L: M.S.

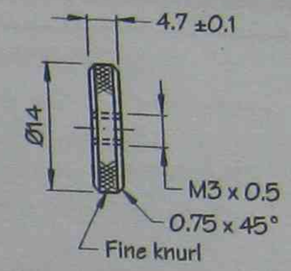

7 ADJUSTING NUT - 1 OFF
MAT'L: M.S.

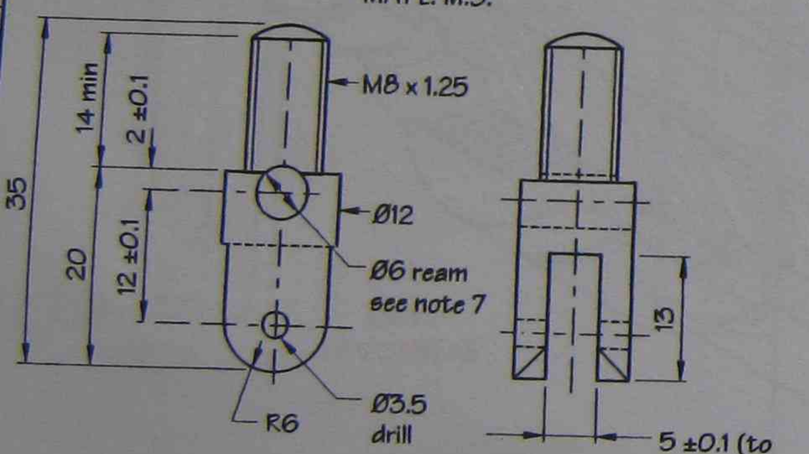

8 ADJUSTING BLOCK - 1 OFF
MAT'L: M.S.

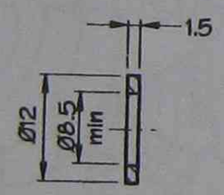

5 WASHER - 3 OFF
MAT'L: M.S.

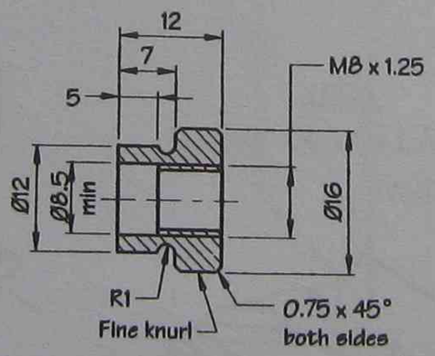

6 NUT TRAVERSE LOCKING - 3 OFF
MAT'L: M.S.

SAMPLE DETAIL DRAWING WITH A NUMBER OF PARTS SHOWN

NOTES

1. UNLESS SHOWN OTHERWISE DIMENSIONS IN MILLIMETRES.
2. ALL M.S. TO BE PER A.S. 1442-1973/S1020.
3. TOLERANCES TO BE WITHIN ±0.5 UNLESS SHOWN OTHERWISE.
4. SURFACE FINISH GENERAL TO BE 1.6/ BEARING SURFACES (ITEM 1) TO BE 0.4/
5. REMOVE ALL SHARP CORNERS WITH A SMOOTH FILE.
6. DO NOT SCALE OFF DRAWING - WORK TO DIMENSIONS.
7. ITEM 1 TO BE A "SLIDE FIT" IN ITEMS 5 & 8. THIS CAN BE PRODUCED BY REAMING TO SUIT THE Ø6 BEAM, OR BY BUFFING THE BEAM WITH FINE EMERY TO SUIT A Ø6 REAMED HOLE.

ITEM	DESCRIPTION	QTY	MATERIAL
9	ADJUSTING SCREW	1	35 x Ø3.5 M.S. BAR
8	" BLOCK	1	35 x Ø12 M.S. BAR
7	" NUT	1	4 x Ø14 M.S.
6	NUT - TRAVERSE LOCKING	3	12 x Ø16 M.S.
5	WASHER	3	12 O.D. x 8.5 I.D. x 1.5 M.S.
4	SCRIBER	2	Ø3 H.S.S. OR SILVER STEEL
3	NUT	2	15 x Ø12 M.S.
2	LEG	2	90 x Ø12 M.S.
1	BEAM	1	300 x Ø6 SILVER STEEL BAR

ISSUE	DATE	ZONE	CHANGES	ECN	BY	CKD
A	15 - 05 - 97		ISSUED FOR PRODUCTION		JD	WL

AMENDMENTS

UNLESS NOTED OTHERWISE TOLERANCES ARE:
LINEAR ± 0.5 UNO
ANGULAR ± 0° 15'

DRAWN TO AS1100

MATERIAL AS LISTED

FINISH SEE NOTES

DRAWN	JD
TRACED	WP
CHECKED	WL
APPROVED	JRP
ISSUED	15- 05 - 97

RECORD OF ISSUE: A

MANUFACTURING & ENGINEERING ESD

TITLE: TRAMMEL DETAILS

SCALE	SIZE	DRAWING No.	SHT
1:2	A3	124	2 OF 2

Producin
Drawings a
storage bu
one square
various oth

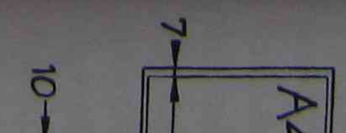

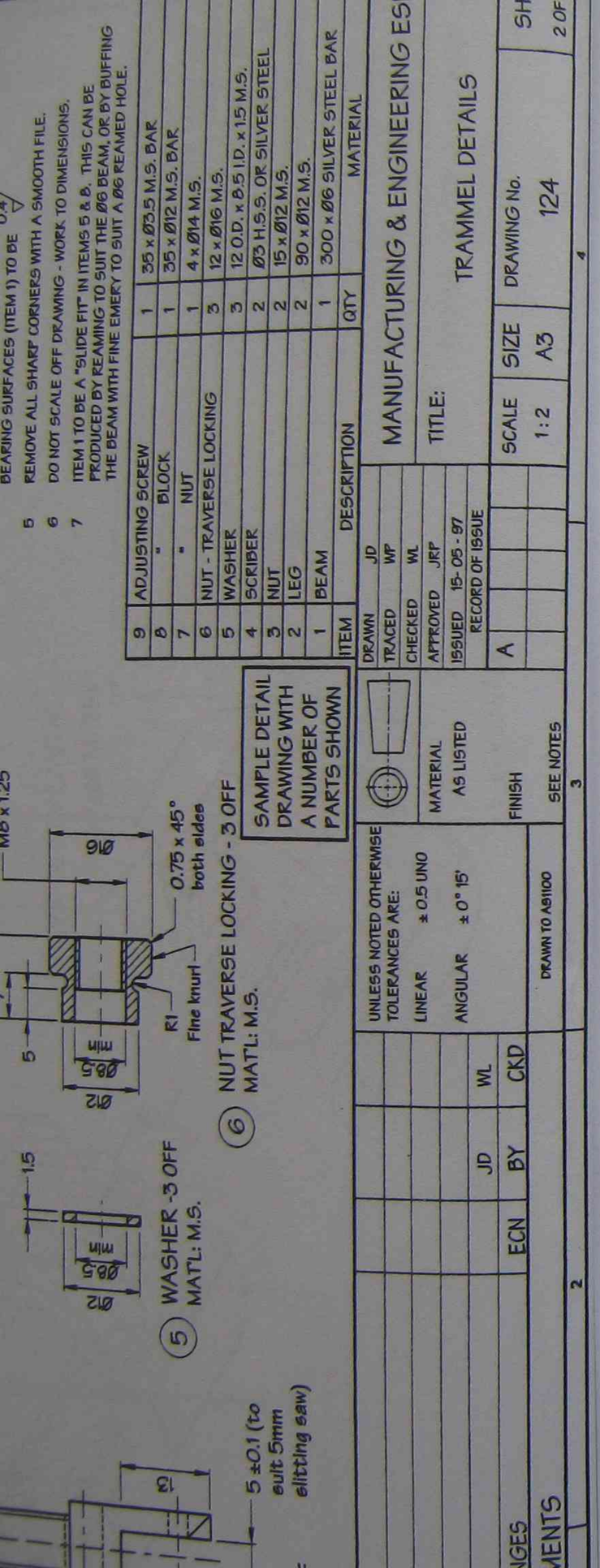

Producing drawings

Drawings are done on standard size sheets, ranging from A0 to A4. This not only aids storage but also is important in the photocopying of drawings. The area of the basic sheet is one square metre and is designated A0. An A0 sheet can be divided up evenly into the various other sizes simply by halving the sheet along the long side in each case.

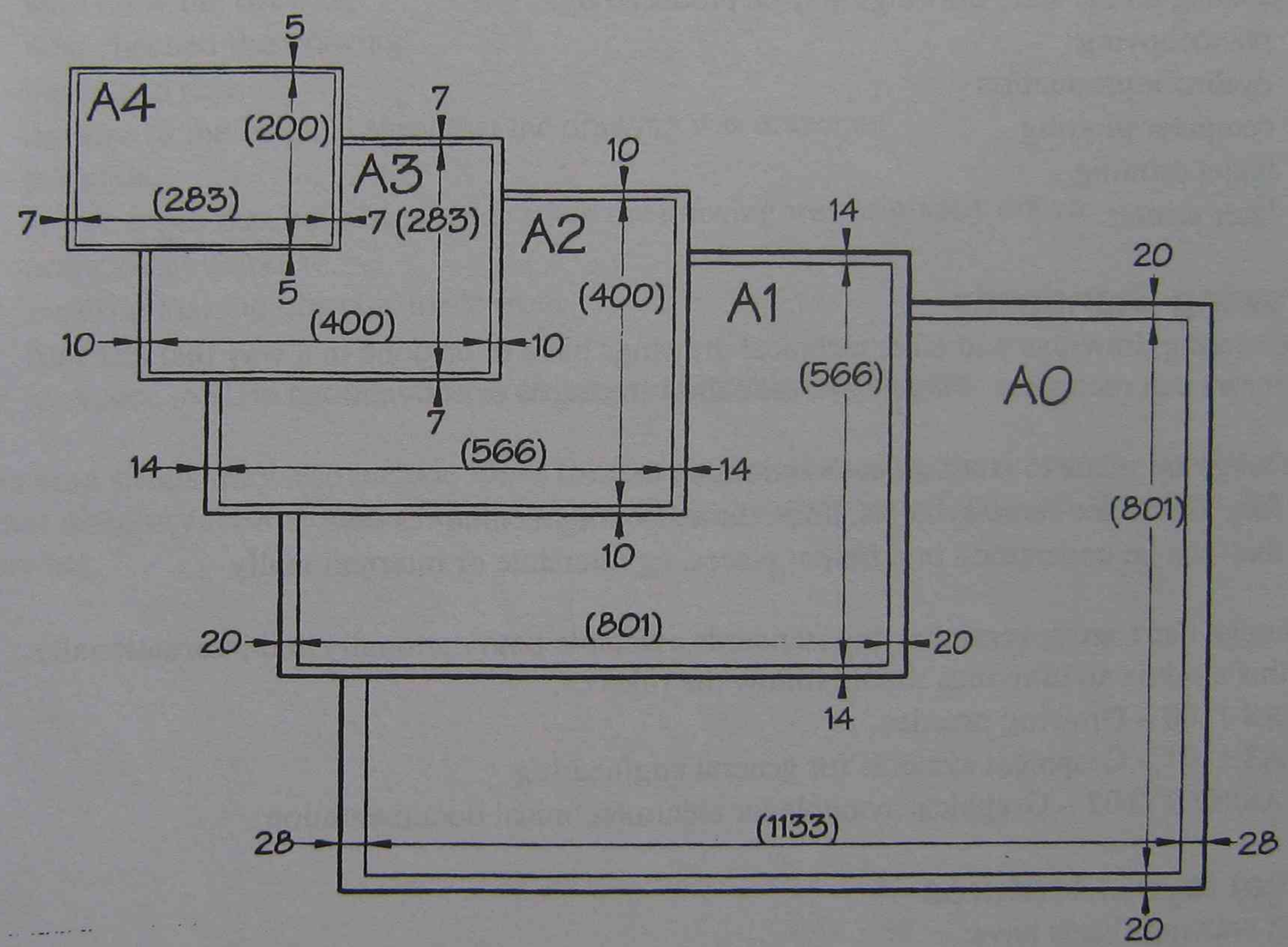

Figure 5- Preferred series sheets

Drawings may be made in three ways:

- freehand sketching
- by hand using drafting equipment
- computer assisted (computer aided design – CAD)

Copying or reproducing drawings

Depending on the size, drawings may be produced by:

- photocopying
- dyeline reproduction
- computer plotting
- inkjet printing
- laser printer

Drawing Standards

Engineering drawings and other technical drawings have to be done in a way that all engineers can recognise. These ways are called standards or conventions.

Drawings are made to standard conventions so that:

- they all use the same symbols, lines, dimensioning techniques etc.
- they can be understood in different places, eg interstate or internationally

Although there are several drawing standards available both nationally and internationally, for this module all drawings should follow the rules of:

- AS 1100 – Drawing practice
- AS 1101 – Graphical symbols for general engineering
- AS/NZS 1102 – Graphical symbols for electrotechnical documentation

Sheet layout features

Most drawing sheets have:

- a margin or boarder
- a title block
- a list of materials and parts
- a format that can be revised when necessary

Drawings by themselves are not enough to tell the reader everything they need to know. Each drawing needs information about materials, joining methods, tolerances and instructions for the manufacturer.

Lines in drawings are different in thickness and different in the way they there are drawn, depending on the size of the paper and the job to be done. However, each kind of line and each thickness must conform to national and international standards.

Written information on a drawing is always in standard lettering. The standard regulates the shape and size of letters and numerals. Symbols are used for items such as dimensions, radius, diameter, tolerancing, surface textures, weld details, and methods of projection.

Title block information

The title block identifies a range of data relating to the drawing. It may include:

- the name of the company
- the name of what is drawn
- the drawing number for storage and reference purposes
- the sheet number in a set of drawings
- who drew the drawing
- who checked the drawing
- the issued date
- the size of the original sheet that the drawing was drawn on
- the scale
- any changes that have been made since the drawing was originally drawn
- projection symbols
- material that the object is made from
- finish
- tolerance to state the allowable size range acceptable for the parts

Drawing sheets may also include zones for finding the location on the drawing – similar to a street directory – for example D1 and a parts list and description of the parts shown on the drawing.

Exercise
Refering

1. How
2. Wha
3. To
4. Wh
5. Wh
6. W
7. In m
8. T th
9. V
10.
11.

ALL DIMENSIONS ARE IN MILLIMETRES
DONOT SCALE

MAIN FEATURES OF A DRAWING SHEET (1)

1.	Border	to highlight the drawing area.
2.	Zones	for finding a location on the drawing - similar to a street directory - for example D1.
3.	Amendments Chart	this shows any changes made to a drawing. It is important for a tradesperson to have the latest drawing to work from.
4.	Title Block	for identifying the drawing and filing it. It also contains other useful information.
5.	Projection Symbol	to show the method of orthographic projection used.
6.	Material	to specify the type of material used, eg. aluminium.
7.	Finish	the quality or type of finish required.
8.	Drawing Standards Number	the particular standard the drawing conforms to.
9.	Tolerances	the allowable size range acceptable for the parts.
10.	Parts List	list and description of the parts shown on the drawing.

(10)

PARTS LIST

ITEM No	DESCRIPTION	MATERIAL	No. REQUIRED

(2) (3) (5)

ISSUE | DATE | ZONE | CHANGE | BY | CKD
AMENDMENTS

UNLESS NOTED OTHERWISE TOLERANCES ARE:
LINEAR (9)
ANGULAR

MATERIAL (6)

DRAWING PRACTICE AS 1100 (8)

FINISH (7)

DRAWN
TRACED
CHECKED
APPROVED
ISSUED
RECORD OF ISSUE

TITLE (4)

SCALE | SIZE | DRG N° | SHT

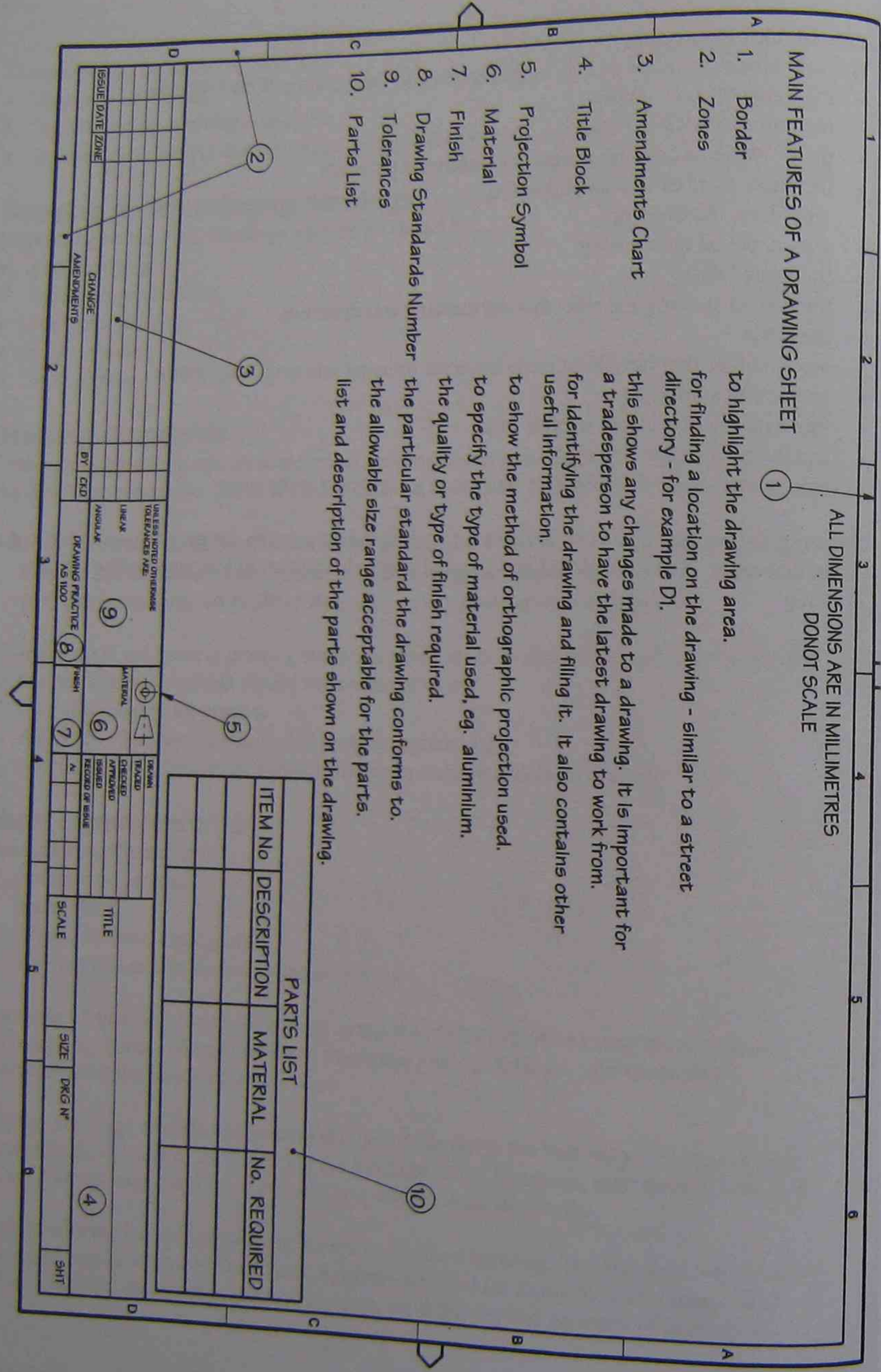

Exercise 1

Referring to the drawing 5210 1A sheet 2 of 4 answer the following questions.

1. How many drawing sheets make up the full set for the hydraulic punch?

   _____

2. What company owns this set of drawings

   _____

3. To what scale is each component drawn?

   _____

4. What size sheet was the original drawing drawn on?

   _____

5. When were the drawings first issued?

   _____

6. Where do you find out what material each component is made from?

   _____

7. In the finish box are the letters UNO. What do the letters stand for and what do they mean?

   _____

8. The punch diameter 'C' of the punch can be made to different diameters. Referring to the chart, how many different diameters can be ordered?

   _____

9. What is the tolerance on all linear dimensions?

   _____

10. What material is the cup seal made from?

    _____

11. What is the date of the last issue of the drawing?

    _____

12. The material for the cup seal has been changed since the original issue of the drawing. What material was it originally made from?

_____

13. What component is named at zone B5?

_____

14. What Australian Standard has the drawing been drawn to?

_____

15. Can you tell if the drawing is first or third angle projection from the information in the title block?

_____

16. How many of each of these components is required when assembling the finished hydraulic punch?

_____

17. What angular tolerance applies to angles on the components?

_____

18. What are the initials of the person who approves the original drawing?

_____

19. How are the ends of the sleeve spring and punch spring to be finished off in manufacture?

_____

20. What units are all the dimensions in?

_____

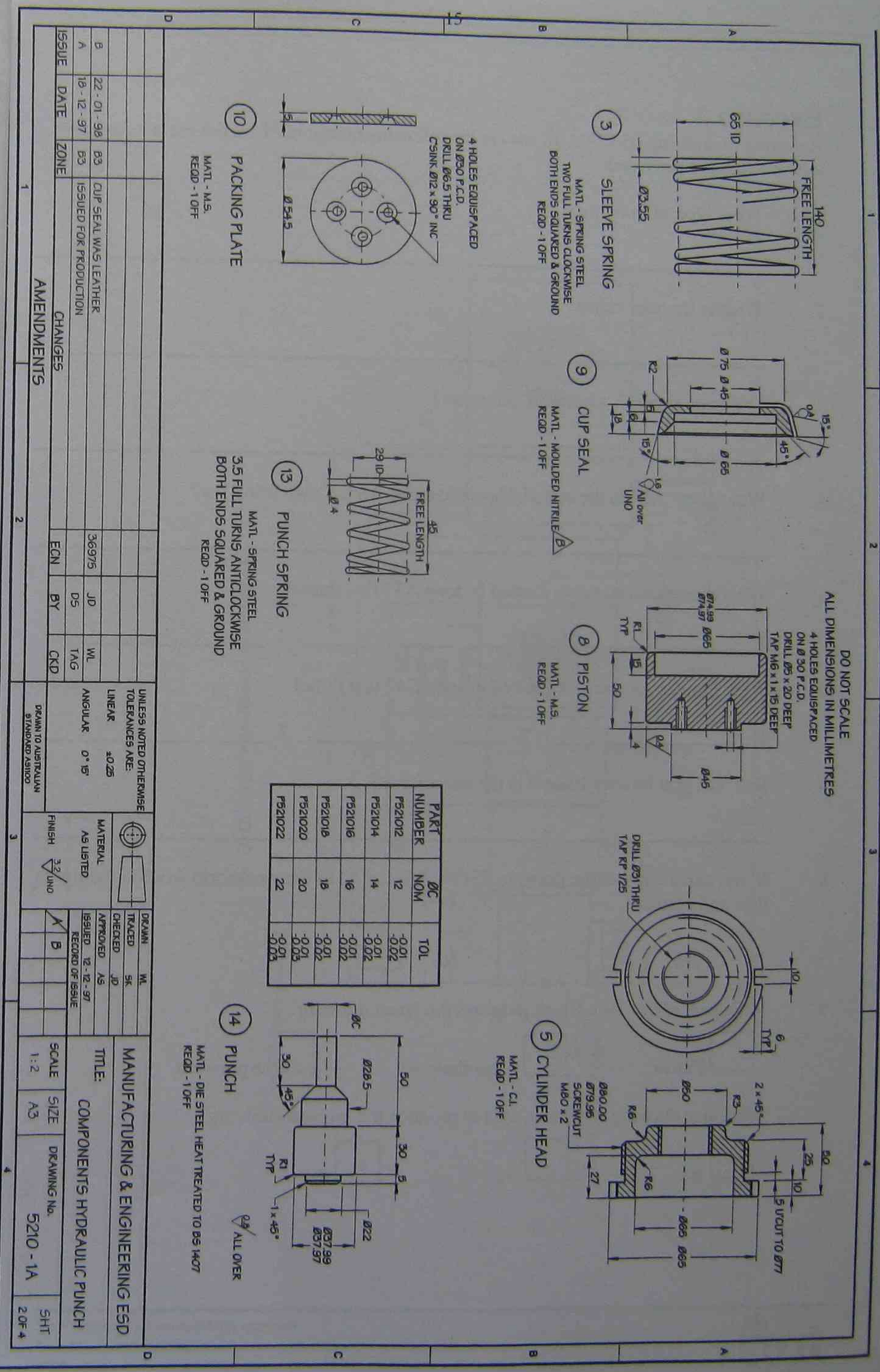

DO NOT SCALE
ALL DIMENSIONS IN MILLIMETRES

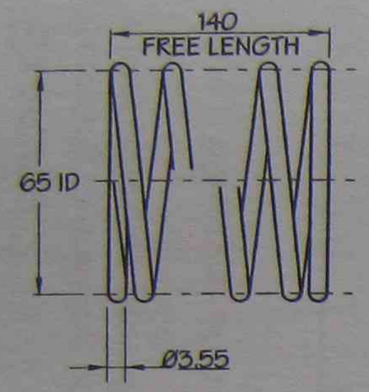

(3) SLEEVE SPRING

MATL - SPRING STEEL
TWO FULL TURNS CLOCKWISE
BOTH ENDS SQUARED & GROUND
REQD - 1 OFF

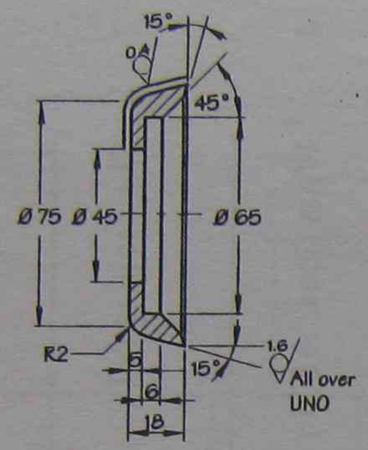

(9) CUP SEAL

MATL - MOULDED NITRILE (B)
REQD - 1 OFF

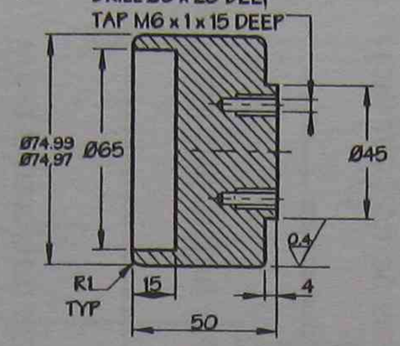

(8) PISTON

MATL - M.S.
REQD - 1 OFF

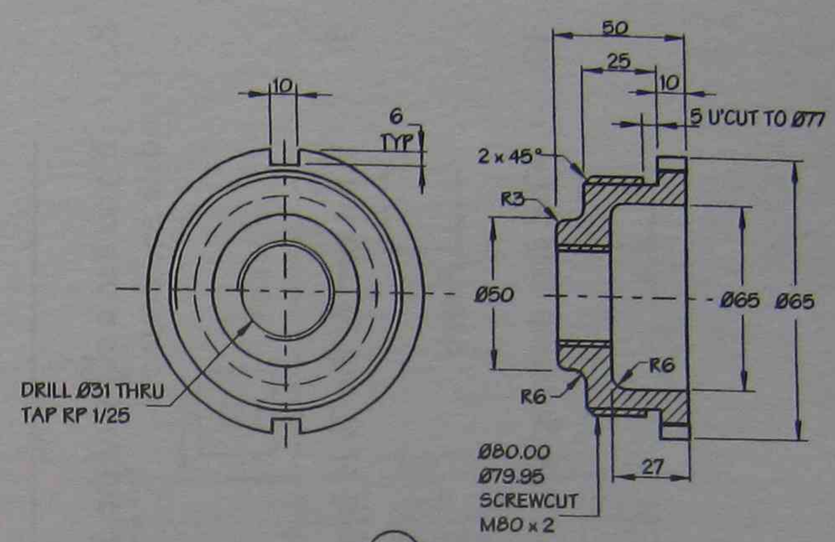

(5) CYLINDER HEAD

MATL - C.I.
REQD - 1 OFF

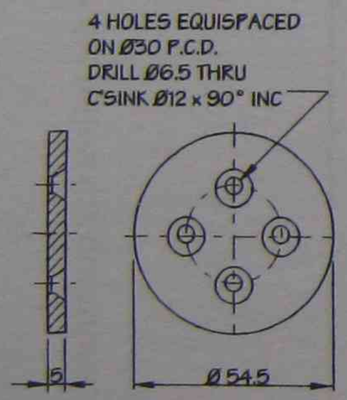

(10) PACKING PLATE

MATL - M.S.
REQD - 1 OFF

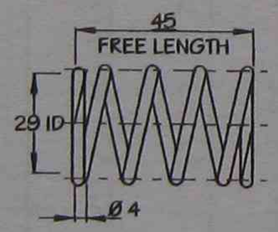

(13) PUNCH SPRING

MATL - SPRING STEEL
3.5 FULL TURNS ANTICLOCKWISE
BOTH ENDS SQUARED & GROUND
REQD - 1 OFF

PART NUMBER	ØC NOM	TOL
P521012	12	-0.01 -0.02
P521014	14	-0.01 -0.02
P521016	16	-0.01 -0.02
P521018	18	-0.01 -0.02
P521020	20	-0.01 -0.03
P521022	22	-0.01 -0.03

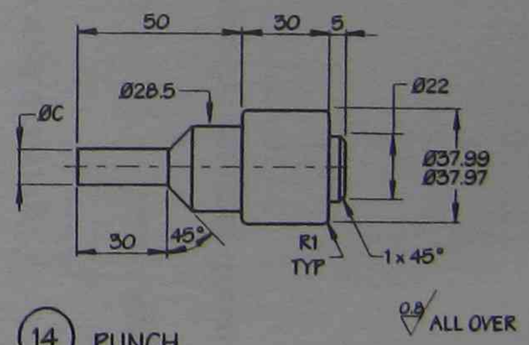

(14) PUNCH

MATL - DIE STEEL HEAT TREATED TO BS 1407
REQD - 1 OFF

ISSUE	DATE	ZONE	CHANGES	ECN	BY	CKD
B	22 - 01 - 98	B3	CUP SEAL WAS LEATHER	36975	JD	WL
A	18 - 12 - 97	B3	ISSUED FOR PRODUCTION		DS	TAG

AMENDMENTS

UNLESS NOTED OTHERWISE TOLERANCES ARE:
LINEAR ±0.25
ANGULAR 0° 15'

DRAWN TO AUSTRALIAN STANDARD AS1100

MATERIAL
AS LISTED

FINISH 3.2 UNO

DRAWN	WL
TRACED	SK
CHECKED	JD
APPROVED	AS
ISSUED	12 - 12 - 97

RECORD OF ISSUE: A B

MANUFACTURING & ENGINEERING ESD

TITLE: COMPONENTS HYDRAULIC PUNCH

SCALE	SIZE	DRAWING No.	SHT
1:2	A3	5210 - 1A	2 OF 4

Exercise 2

Referring to drawing 6547-1-1/B, answer the following questions. Tick the correct response where boxes are provided.

1. What type of drawing is it?

   _____

2. What is the part called?

   _____

3. The scale is NTC, what does that mean?

   _____

4. What does 'AS' in the material specifications AS CS1040 stand for?

   _____

5. What dimension sizes are located in zone A3? (list three)

   1._____ 2._____ 3._____

6. What dimension sizes are located in zone C4? (list three)

   1._____ 2._____ 3._____

7. How can you be sure Issue B is the latest issue?

   _____

8. If you had a copy of the drawing 6547-1-1(issue A) in the workshop would it be up to date and correct?

   Yes ☐ No ☐

9. What part of the Title Block indicates the latest drawing?

   ☐ Finish ☐ Amendments ☐ Approved

10. What size drawing sheet was used to produce the original drawing?

    ☐ A2 ☐ A3 ☐ A4

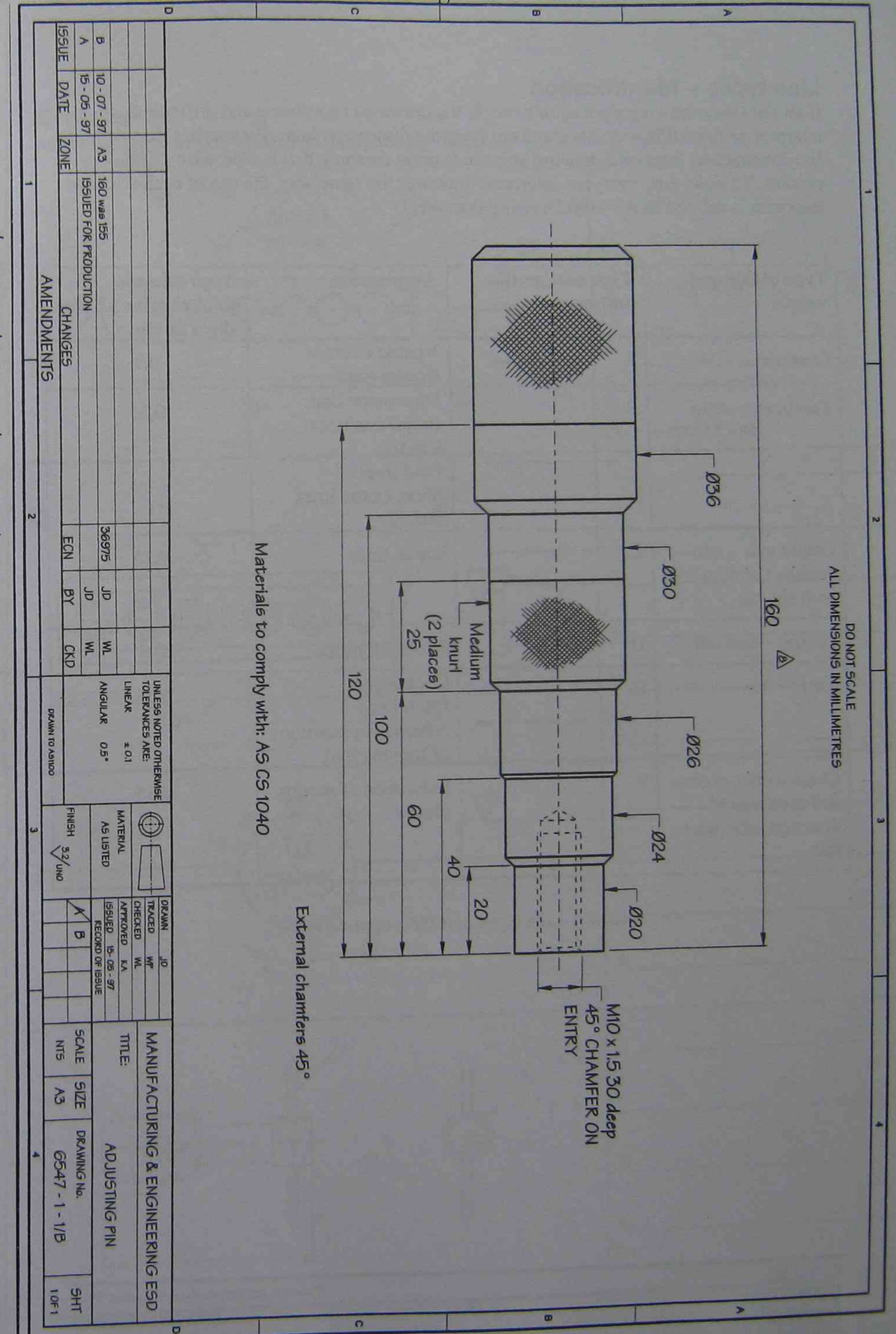

DO NOT SCALE
ALL DIMENSIONS IN MILLIMETRES

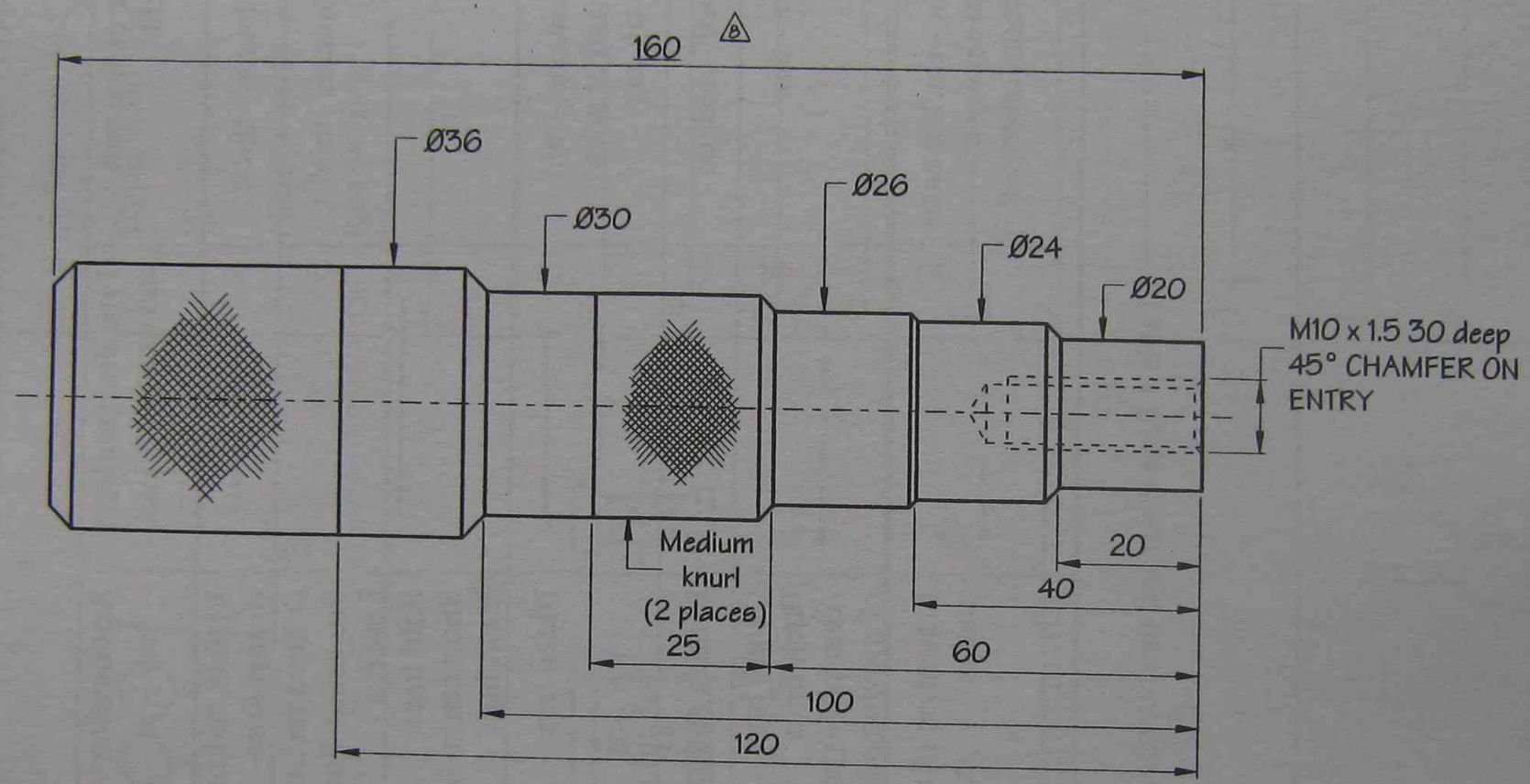

External chamfers 45°

Materials to comply with: AS CS 1040

ISSUE	DATE	ZONE	CHANGES	ECN	BY	CKD
B	10 - 07 - 97	A3	160 was 155		JD	WL
A	15 - 05 - 97		ISSUED FOR PRODUCTION	36975	JD	WL

AMENDMENTS

UNLESS NOTED OTHERWISE TOLERANCES ARE:
LINEAR ± 0.1
ANGULAR 0.5°

DRAWN TO AS1100

MATERIAL
AS LISTED

FINISH 3.2 UNO

DRAWN	JD
TRACED	WP
CHECKED	WL
APPROVED	KA
ISSUED	15- 05 - 97

RECORD OF ISSUE: A B

MANUFACTURING & ENGINEERING ESD

TITLE: ADJUSTING PIN

SCALE	SIZE	DRAWING No.	SHT
NTS	A3	6547 - 1 - 1/B	1 OF 1

response

up to

Line types – Identification

If all lines on a drawing were equally thick, the drawing is confusing and difficult to interpret, as the outlines do not stand out from the dimension lines. By varying the thickness and construction lines on a drawing you can express meaning that is otherwise difficult to express. To make sure everyone interprets drawings the same way, the use of each type and thickness is defined in AS 1100 Drawing Practice.

Type of line and weight	Type designation and example	Application	Approximate thickness on A3 size sheet in mm
Continuous - thick	A	Visible outlines Border lines	0.7
Continuous - thin	B	Dimension line Projection lines Leaders Fold lines Short centre lines Hatching	0.35
Continuous – thin freehand or rules with zig-zag	C	Break lines	0.35
Dashed - medium	D	Hidden outlines	0.5
Chain - thin	E	Centre lines Pitch lines Alternative position of moving part	0.35
Chain – thick at ends and at change of direction, otherwise thin	F	Indication of section planes	0.35

Table 1 Line types and their applications

Exercise 3

Name the types of line indicate in the space provided.

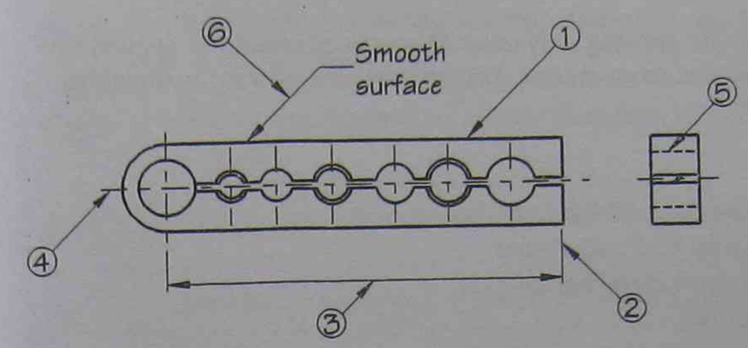

1. Outline
2. Extension line
3. Dimension line
4. Centre line
5. Hidden outline
6. Leader line

Type

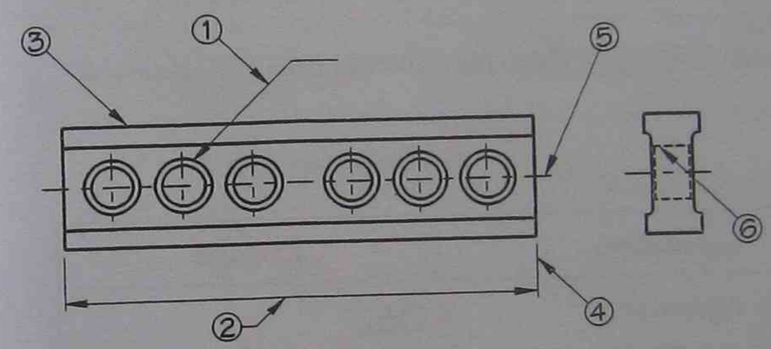

1. _____
2. _____
3. _____
4. _____
5. _____
6. _____

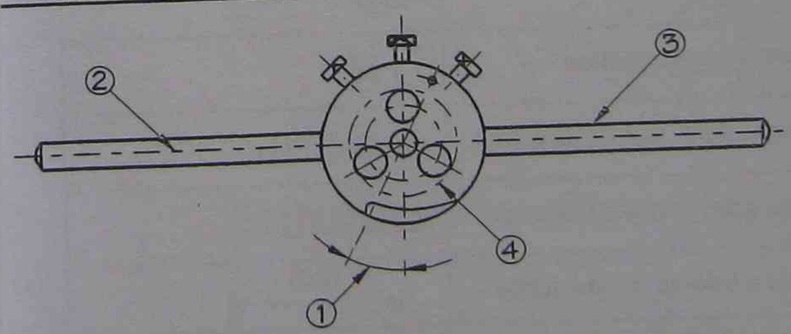

1. _____
2. _____
3. _____
4. _____

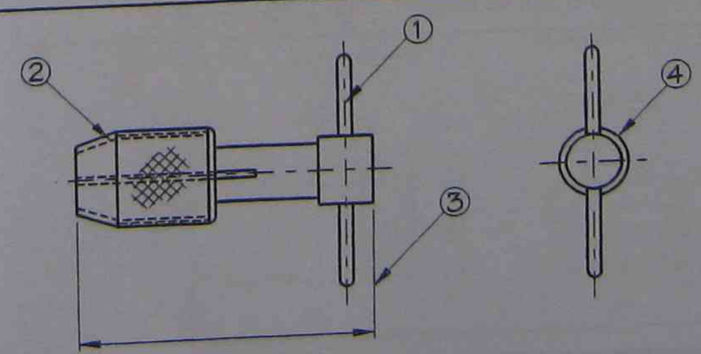

1. _____
2. _____
3. _____
4. _____

Dimensions

The outline of the object indicates the shape of the object, the dimensions indicate the size of the object. Only those dimensions necessary for the manufacture of the object should be shown on the drawing.

All dimensions should be shown on the drawing only once. Dimensions should be applied to the view where the detail is seen clearest as an outline. Dimensions on engineering drawings are usually expressed in millimetres.

Points to consider:

- place dimensions well clear of drawings and one another
- place dimensions where they will be best understood
- use a dark pencil for the numbers and arrow heads
- generally show dimensions only once
- keep dimensions off the actual view
- dimension all circles and arcs radially
- avoid crossing dimension lines
- avoid dimensioning hidden details
- dimension along the dimension lines placing sizes so they will read from the bottom and right hand side of the sheet.

Symbol	Description	Example
Ø	To indicate a diameter	Ø50
R	To indicate radius	R30
□	To indicate a square section	□75
→	To indicate a taper and its direction	→ 3:100
◺	To indicate a slope and its direction	◺ 1:10
( )	To indicate a reference dimension	(60)
—	To indicate a dimension not to scale	(60)

Application of dimensioning symbols

℄	Indicates the centre-line of a part, feature, or group of features. It shall be located to or on the centre-line
SØ	Indicates the diameter of spherical surface, it shall be placed in front of the dimension
SR	Indicates the radius of spherical surface, it shall be placed in front of the dimension
∨	Indicates a countersink, it shall be placed in front of the dimension
⌴	Indicates counterbore or spotface, must be placed in front of the dimension
↧	Indicates depth of the feature, this must be situated in front of the dimension
◡	Indicates that the dimension refers to an arc length, this must be placed above the dimension

(Countersinks) Type

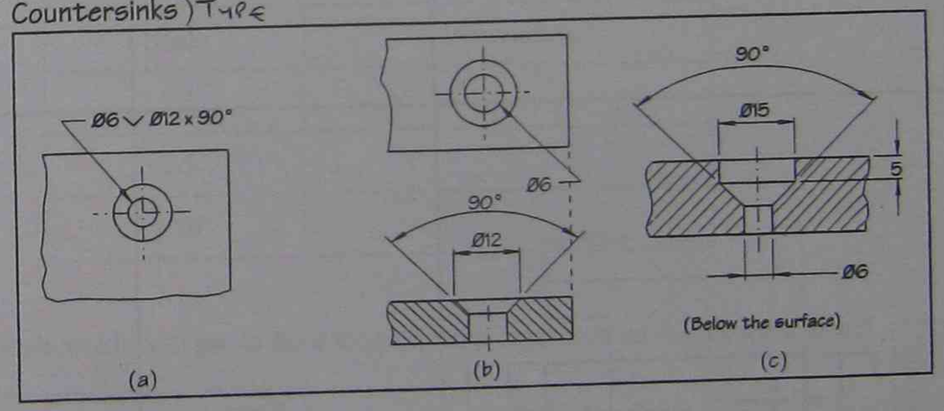

(Counterbores) Type

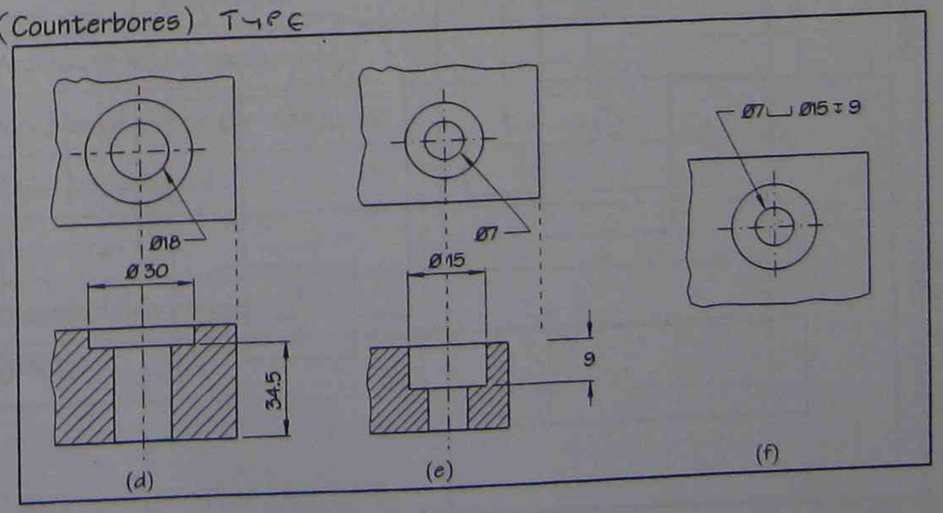

Scaled dra
The true size
drawn at thei
will fit on th

Large details
small things

Enla

Example
(a) If ar
scale

(b) Wh

imensioned. Correctly dimension the corresponding drawings on
e right side of the sheet.

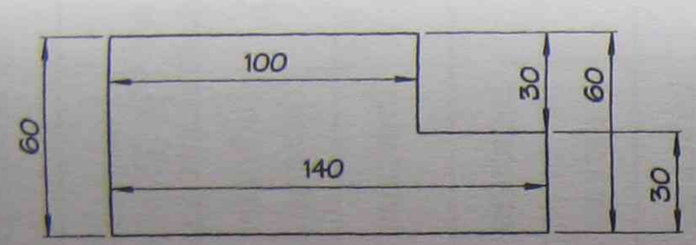

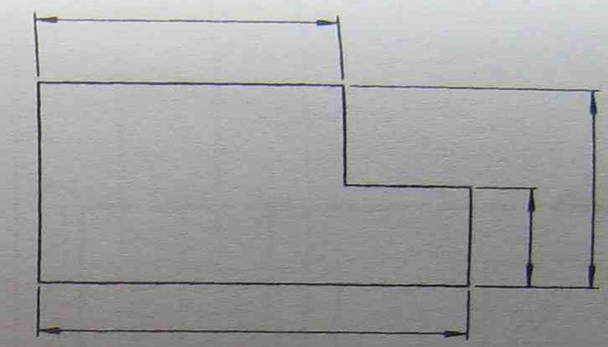

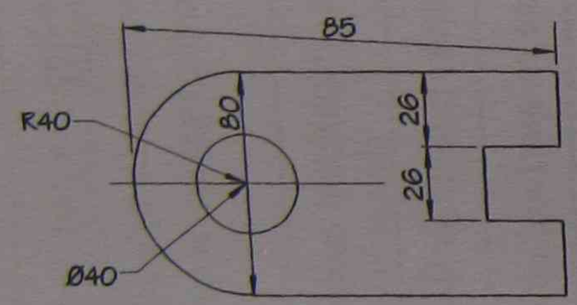

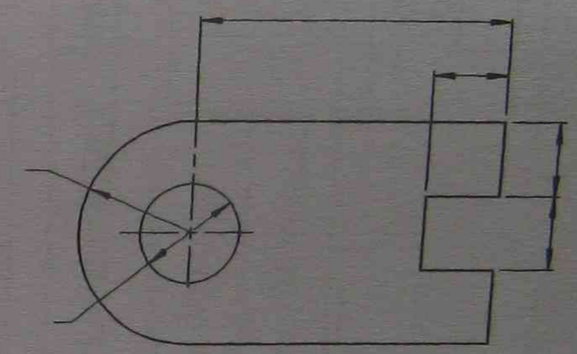

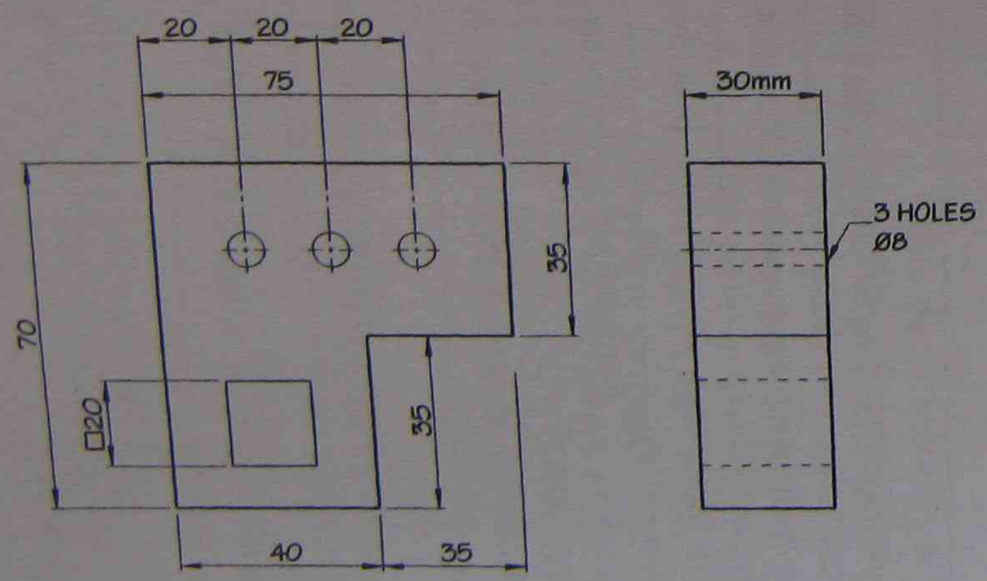

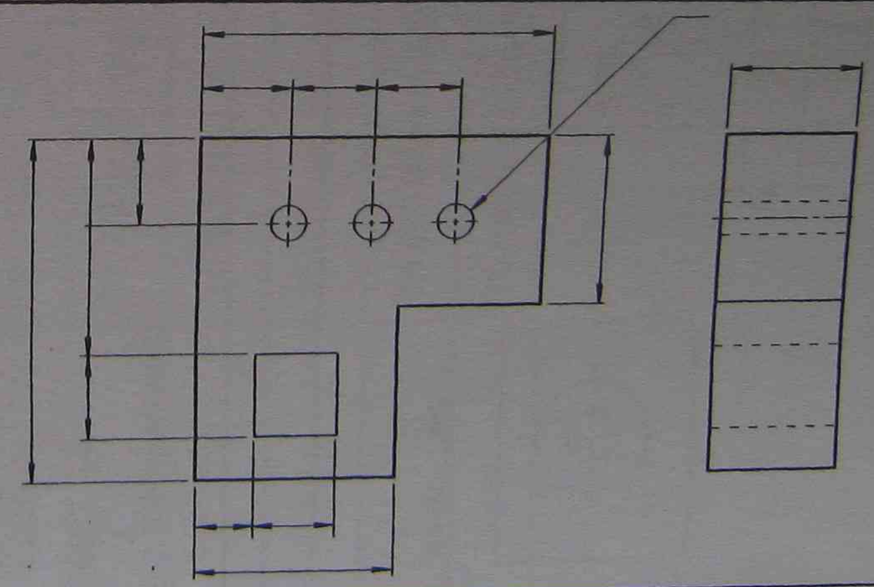

STUDENTS NAME	MANUFACTURING & ENGINEERING EDUCATIONAL SERVICES DIVISION

TAFE

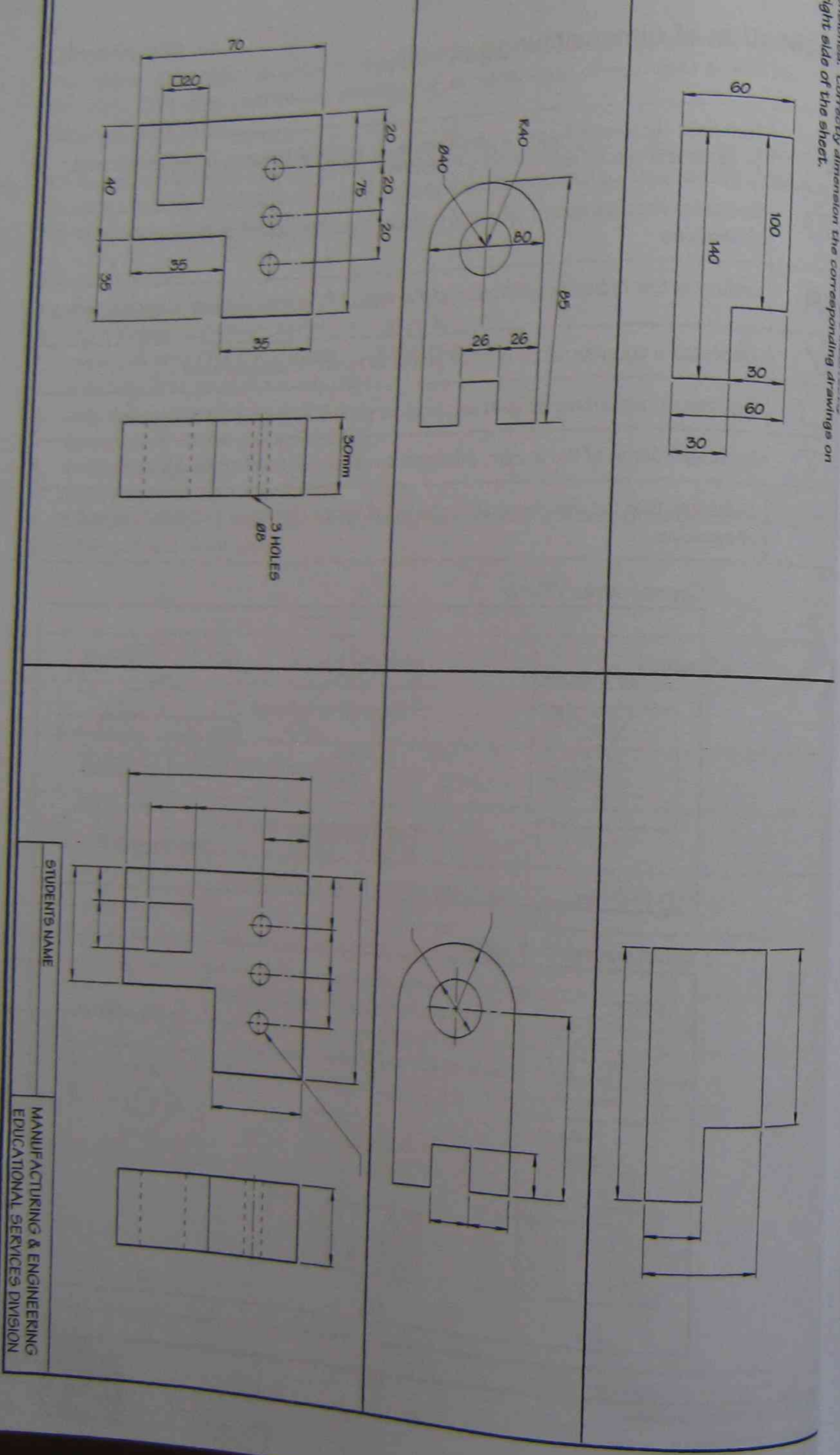

Dimensioned. Correctly dimension the corresponding drawings on right side of the sheet.

Scaled drawings

The true size of an object may vary from 1 mm to thousands of mm. Small things should be drawn at their natural size. Larger ones should be drawn to a recognised scale so that they will fit on the drawing sheet.

Large details, structures and machine parts are drawn smaller than actual size, while very small things such as instruments parts are drawn larger than their true size.

Recommended Scales Australian Standard 1100				
Enlargement	**Full size**	**Reduction**		
10:1	1:1	1:2	1:5	1:10
5:1		1:20	1:50	1:100
2:1		1:200	1:500	1:1000
		1:2000	1:5000	1:10 000

Example 5

(a) If an object has a dimension of 525 mm, what would it be drawn if the following scales were used?

Scale	Drawn size
1:2	
1:5	
1:10	

(b) What scale would you use to draw the following objects on an A3 drawing sheet?

Object	Drawing Scale
Architrave switch mechanism	
Site plan of a domestic installation	
6 mm screw thread	
House plan	
Domestic switchboard	
10 A socket outlet	

Fabrication symbols

Surface texture

Surface texture refers to the roughness of a surface. It can vary from very rough to very smooth, for example an aluminium casting may have the following textures:

- rough cast
- fine cast
- die cast
- rough machined
- medium machined
- fine machined

Standard symbols

Basic symbol: used when surface finish can be produced by an convenient technique

Modified symbol: finish done by a machining process

Modified symbol: indicating a surface finish without removal of material (for example, quality of an initial casting

Welding symbols and their application

The standard welding symbol used to represent welds on drawings and some simple examples are shown in the following diagrams.

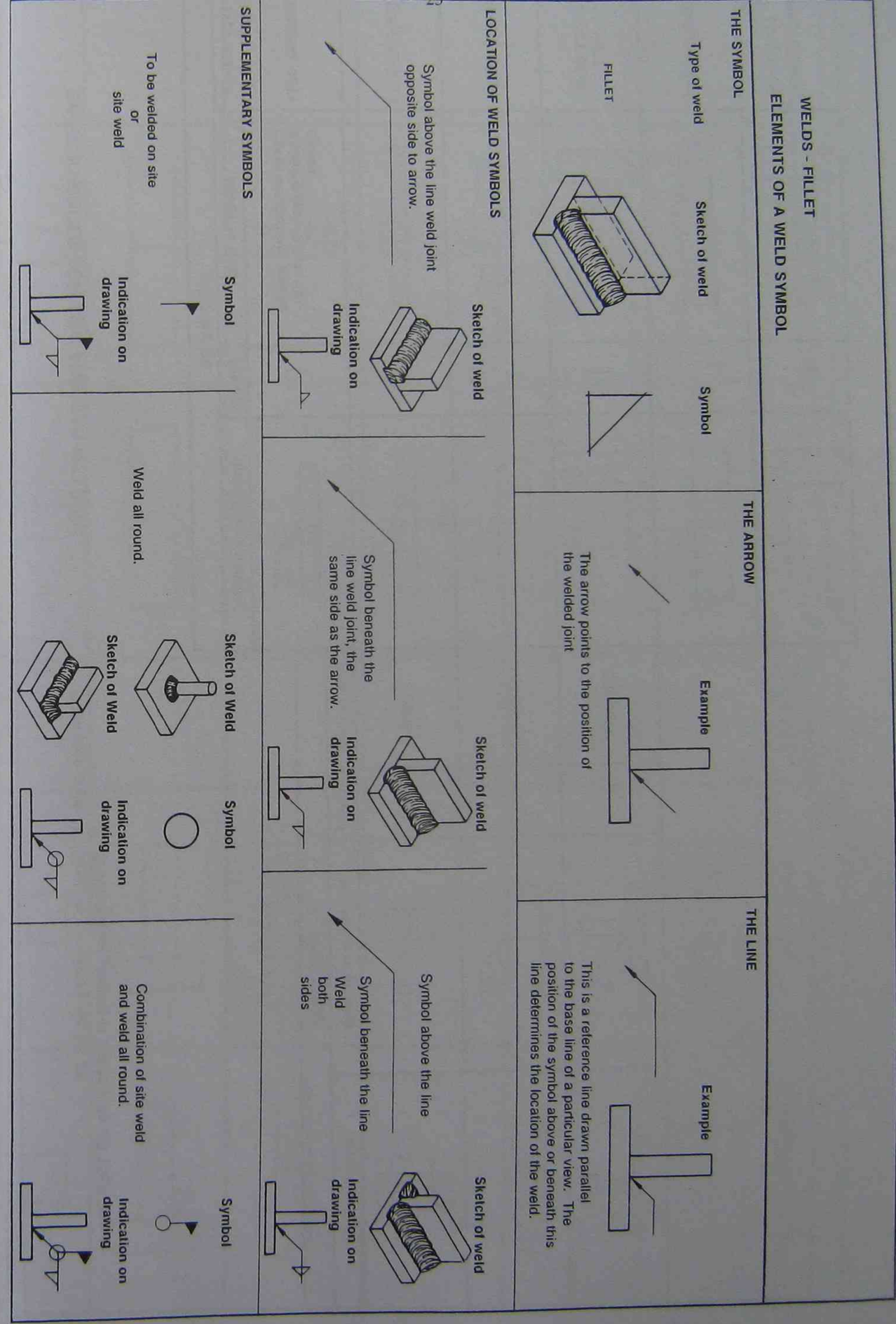

WELDS - FILLET

ELEMENTS OF A WELD SYMBOL

THE SYMBOL

Type of weld | Sketch of weld | Symbol

FILLET

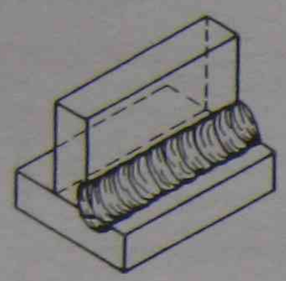

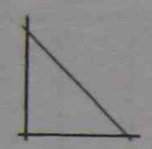

THE ARROW

Example

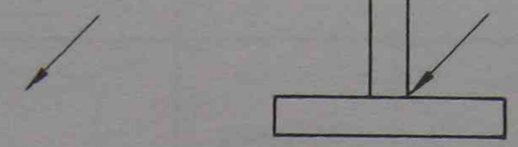

The arrow points to the position of the welded joint

THE LINE

Example

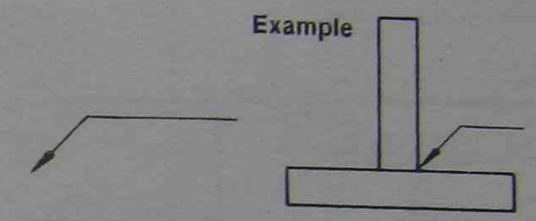

This is a reference line drawn parallel to the base line of a particular view. The position of the symbol above or beneath this line determines the location of the weld.

LOCATION OF WELD SYMBOLS

Symbol above the line weld joint opposite side to arrow.

Sketch of weld

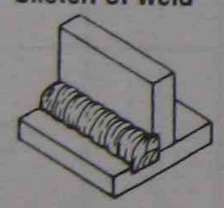

Indication on drawing

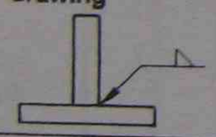

Symbol beneath the line weld joint, the same side as the arrow.

Sketch of weld

Indication on drawing

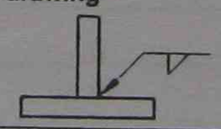

Symbol above the line

Symbol beneath the line

Weld both sides

Sketch of weld

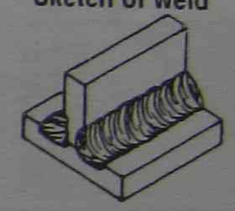

Indication on drawing

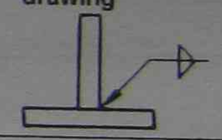

SUPPLEMENTARY SYMBOLS

To be welded on site or site weld

Symbol

Indication on drawing

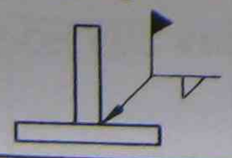

Weld all round.

Sketch of Weld

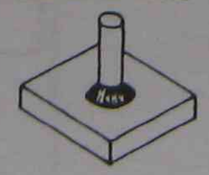

Sketch of Weld

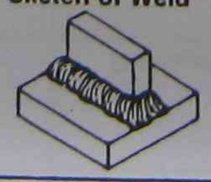

Symbol

Indication on drawing

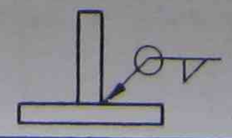

Combination of site weld and weld all round.

Symbol

Indication on drawing

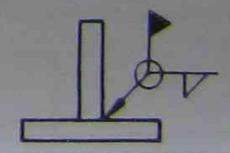

BASIC SYMBOLS FOR ARC AND GAS WELDING

Reference code: 1. Symbols for welding No AS Z6
2. SAA code for welding in building No AS 1554 Part 1

BUTT WELDS

Type of weld	Sketch of weld	Symbol	Indication on drawing
GENERAL BUTT	Full penetration butt weld by a welding procedure to be agreed.	Z	
SQUARE BUTT		||	
SINGLE V BUTT		V	
SINGLE BEVEL BUTT		V	
SINGLE U BUTT		Y	
SINGLE J BUTT		Y	

WELD FINISH

Type of finish	Symbol	Indication of drawing	Sketch of weld
FLUSH	—		
CONVEX	⌒		
CONCAVE	⌣		

EXERCISE 6

WELD SYMBOLS - COMPLETE THE FOLLOWING BY DRAWING THE WELD OR SYMBOL

pe of weld	Sketch of weld	Indication on drawing	Type of weld	Sketch of weld	Indication on drawing
FILLET					
GLE V BUTT				GROUND FLUSH	

Review questions

These questions will help you revise what you have learnt in this topic.

1. Referring to Drwg 97-416 answer the following questions.

(a) What type of drawing is it?

_____

(b) What is the device called?

_____

(c) How many items are listed?

_____

(d) How many parts are required for one complete assembly?

_____

(e) What angle is the drawing produced in?

☐ First angle ☐ Third angle

(f) How did you decide?

_____

(g) What detail drawing number needs to be found to produce Item 2, the side plate?

_____

(h) When was this drawing first issued?

_____

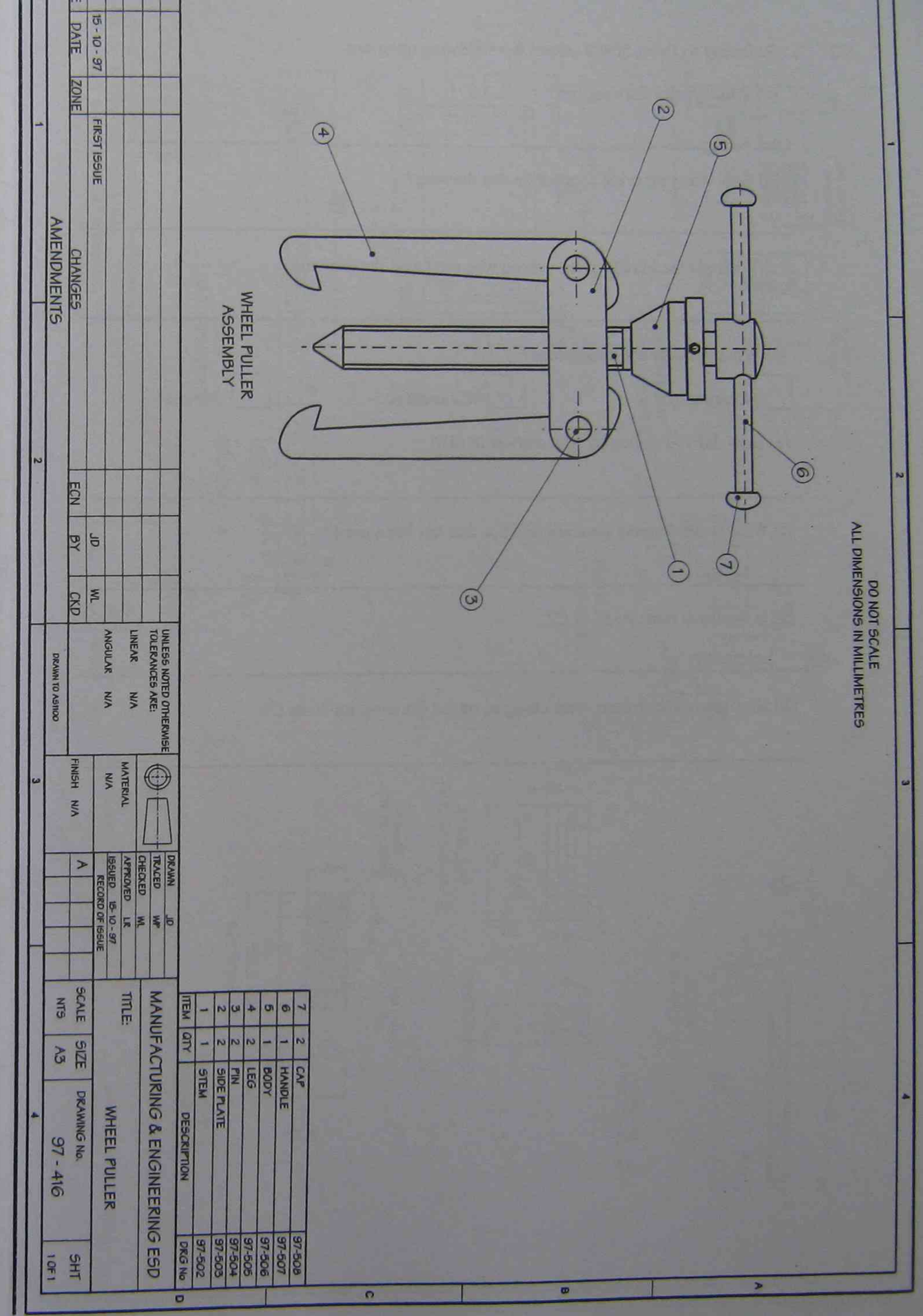

DO NOT SCALE
ALL DIMENSIONS IN MILLIMETRES

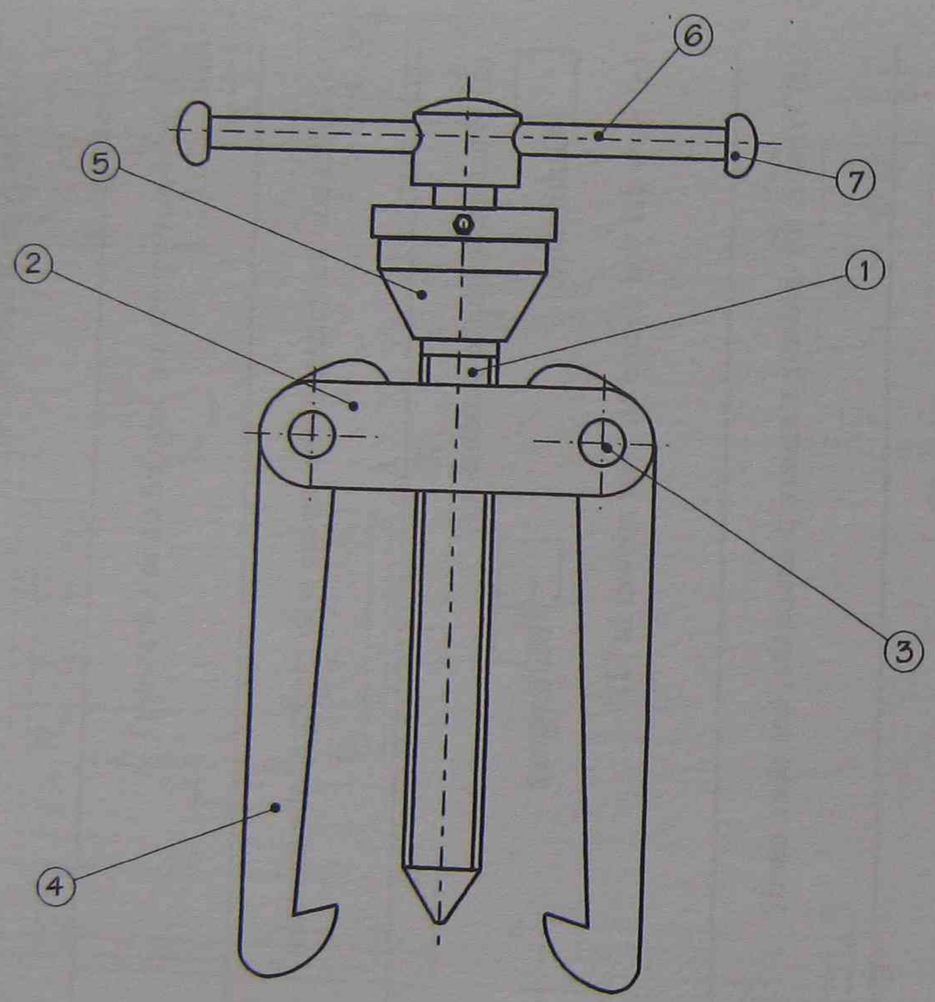

WHEEL PULLER
ASSEMBLY

ITEM	QTY	DESCRIPTION	DRG No
7	2	CAP	97-508
6	1	HANDLE	97-507
5	1	BODY	97-506
4	2	LEG	97-505
3	2	PIN	97-504
2	2	SIDE PLATE	97-503
1	1	STEM	97-502

ISSUE	DATE	ZONE	CHANGES	ECN	BY	CKD
A	15 - 10 - 97		FIRST ISSUE		JD	WL

AMENDMENTS

UNLESS NOTED OTHERWISE TOLERANCES ARE:
LINEAR N/A
ANGULAR N/A

DRAWN TO AS1100

MATERIAL N/A

FINISH N/A

DRAWN JD
TRACED WP
CHECKED WL
APPROVED LR
ISSUED 15-10-97

RECORD OF ISSUE
A

MANUFACTURING & ENGINEERING ESD

TITLE: WHEEL PULLER

SCALE	SIZE	DRAWING No.	SHT
NTS	A3	97 - 416	1 OF 1

29

2. Referring to Drwg 50882 answer the following questions.

(a) What type of drawing is it?

_____

(b) How many parts are detailed on this drawing?

_____

(c) What are the initials of the person who produced the drawing?

_____

(d) What units are the dimensions?

☐ Centimetres ☐ Millimetres ☐ Metres

(e) How did you decide on your answer in (d)?

_____

(f) What is the drawing standard practice that has been used?

_____

(g) Is the latest issue A, B, or C?

_____

(h) How many dimensions were changed on the drawing for issue C?

_____

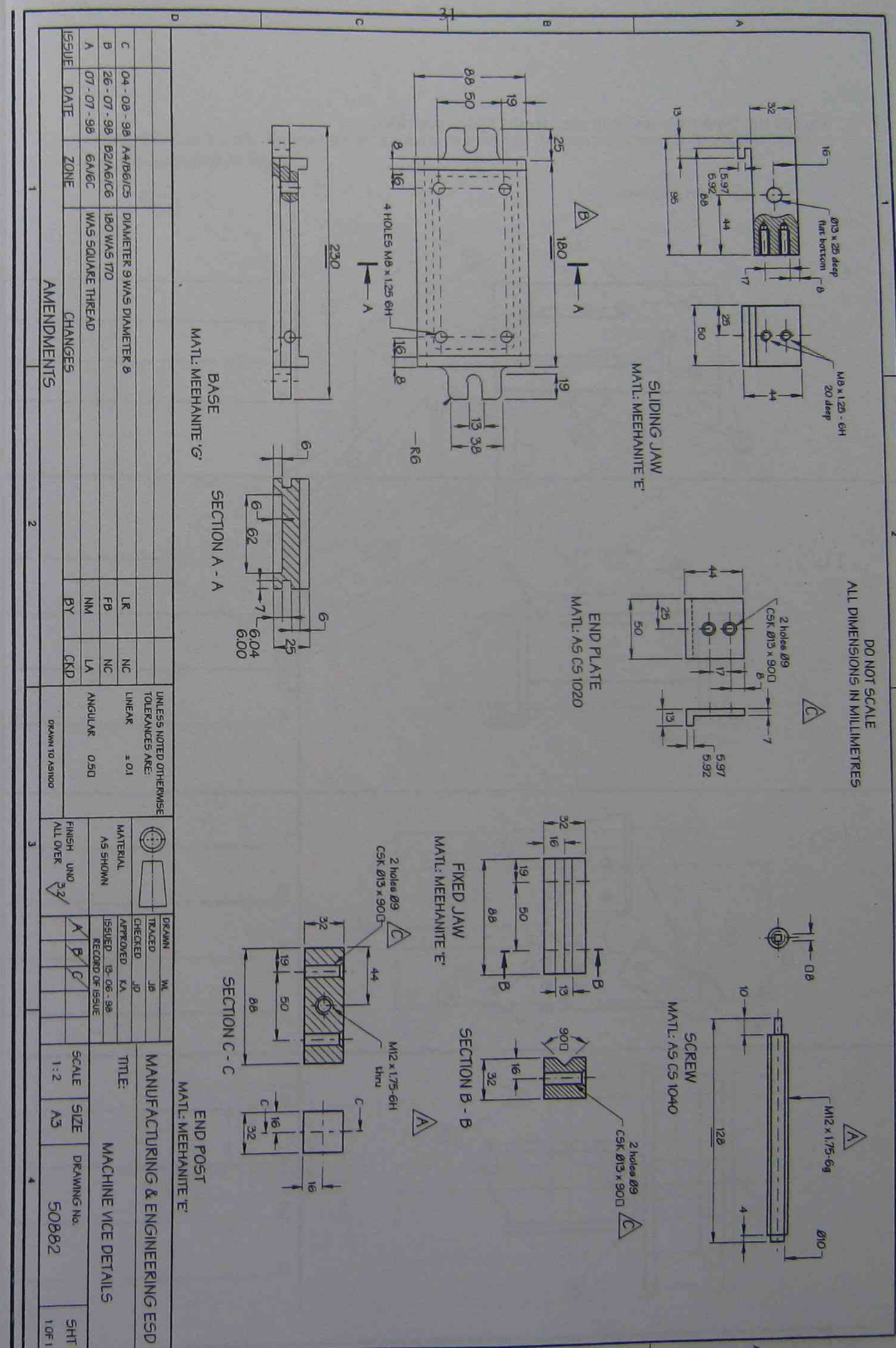

DO NOT SCALE
ALL DIMENSIONS IN MILLIMETRES

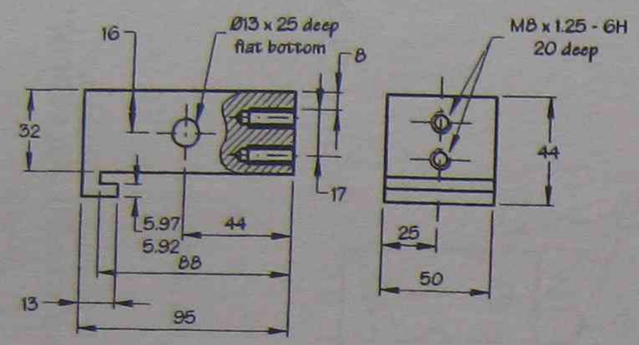

SLIDING JAW
MATL: MEEHANITE 'E'

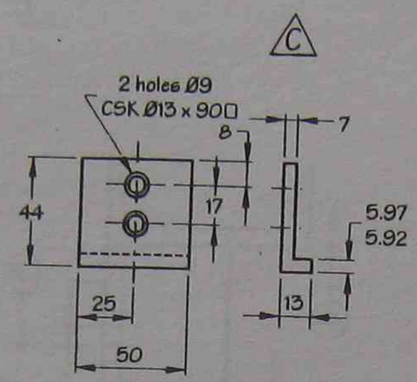

END PLATE
MATL: AS CS 1020

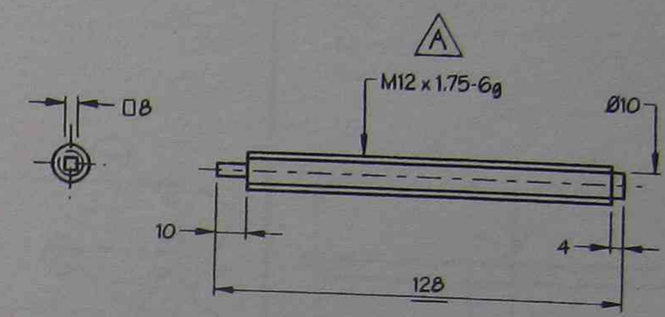

SCREW
MATL: AS CS 1040

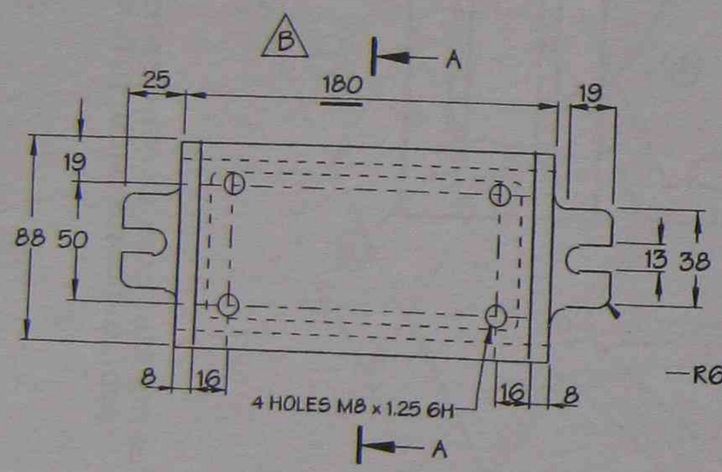

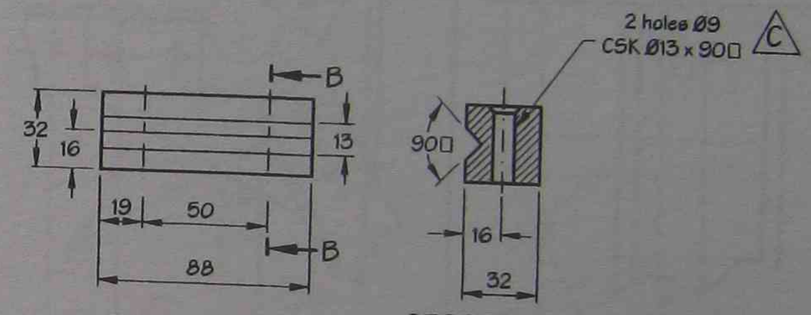

FIXED JAW
MATL: MEEHANITE 'E'

SECTION B - B

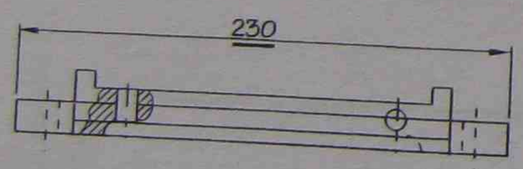

BASE
MATL: MEEHANITE 'G'

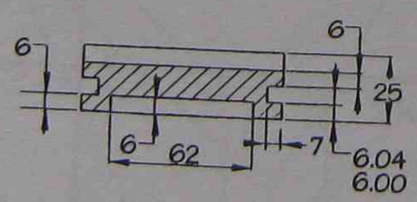

SECTION A - A

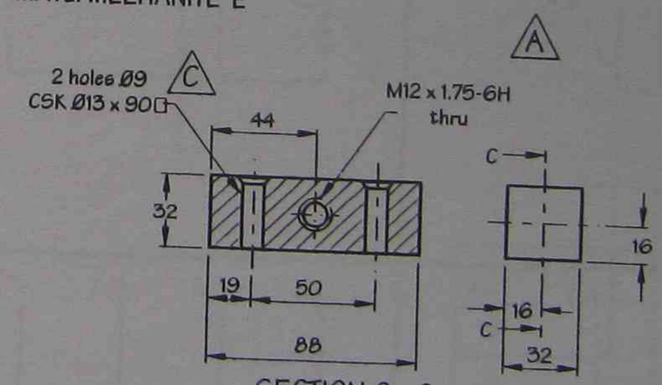

SECTION C - C

END POST
MATL: MEEHANITE 'E'

ISSUE	DATE	ZONE	CHANGES	LR	NC
C	04 - 08 - 98	A4/B6/C5	DIAMETER 9 WAS DIAMETER 8	FB	NC
B	26 - 07 - 98	B2/A6/C6	180 WAS 170	NM	LA
A	07 - 07 - 98	6A/6C	WAS SQUARE THREAD	BY	CKD

AMENDMENTS

UNLESS NOTED OTHERWISE TOLERANCES ARE:
LINEAR ± 0.1
ANGULAR 0.5□

DRAWN TO AS1100

MATERIAL
AS SHOWN

FINISH UNO
ALL OVER 3.2

DRAWN	WL
TRACED	JB
CHECKED	JD
APPROVED	KA
ISSUED	13- 06 - 98

RECORD OF ISSUE
A B C

MANUFACTURING & ENGINEERING ESD

TITLE:
MACHINE VICE DETAILS

SCALE	SIZE	DRAWING No.	SHT
1 : 2	A3	50882	1 OF 1

3. Names the type of lines indicated in the space provided.

(a)

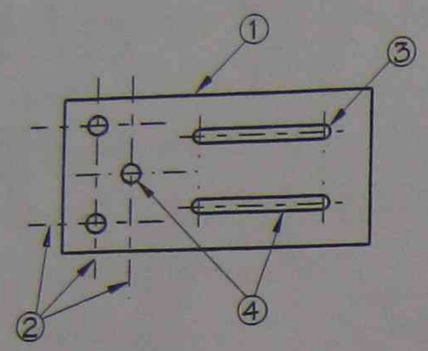

1. _____
2. _____
3. _____
4. _____

(b)

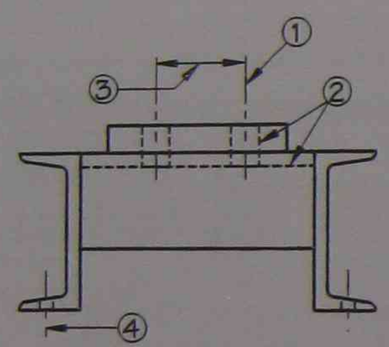

1. _____
2. _____
3. _____
4. _____

(c)

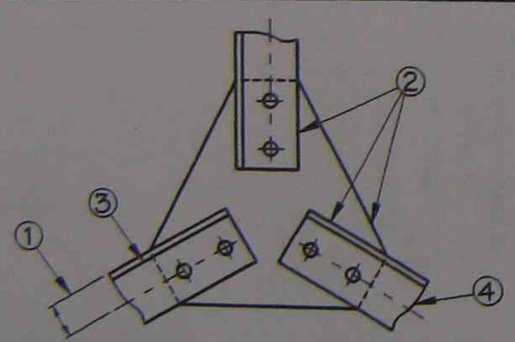

1. _____
2. _____
3. _____
4. _____

(d)

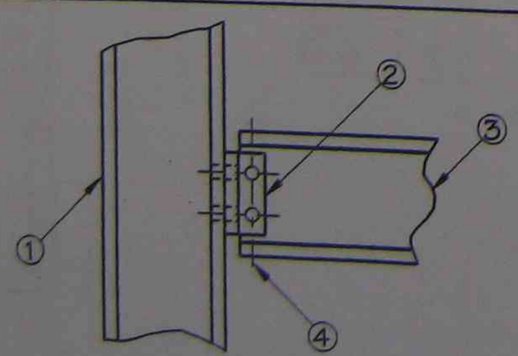

1. _____
2. _____
3. _____
4. _____

4. Using the dimensions shown on the isometric drawing of the casting shown below, dimension the orthogonal drawing.

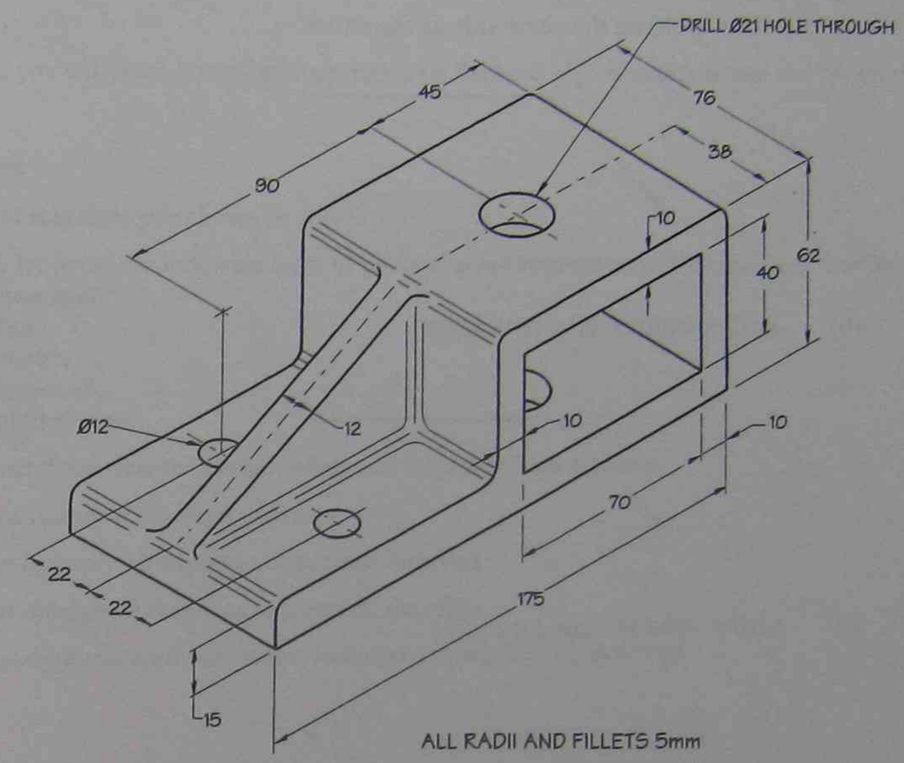

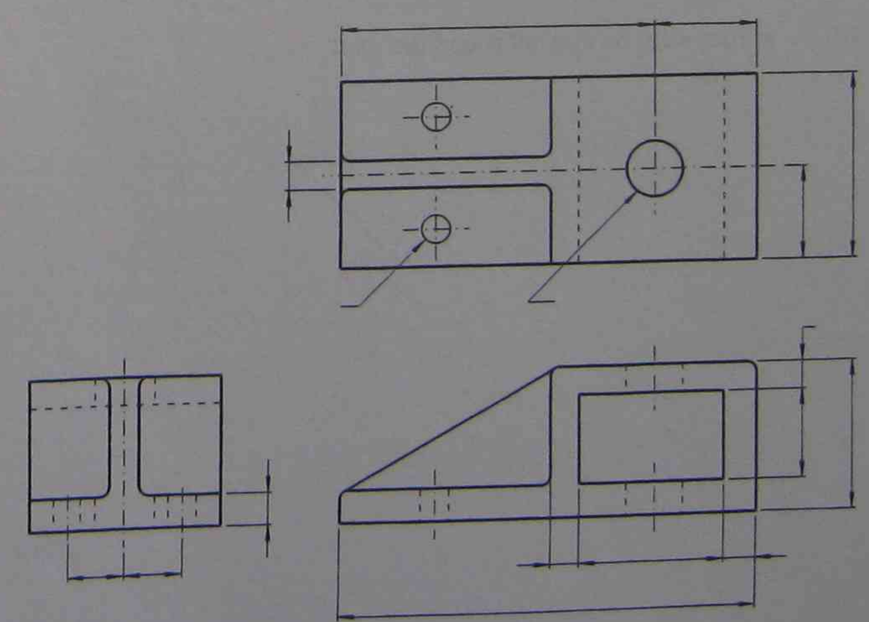

5. Draw the symbols for the following welded joints in the correct position on the reference line.

(a) fillet weld on the same side as the arrow.

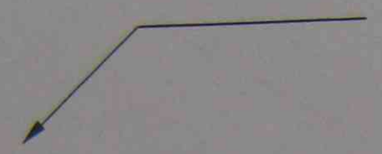

(b) a fillet weld on site, both sides

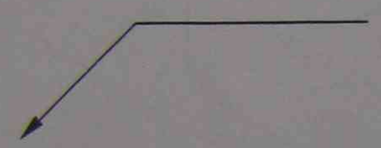

(c) a fillet weld all round the joint

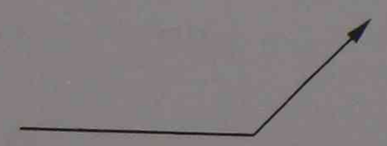

(d) a fillet weld on site, all round the joint

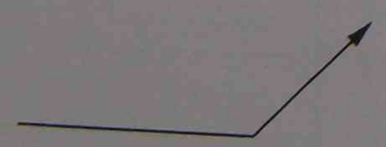

2. Orthogonal and Pictorial Drawings

Purpose

In this topic you will learn how to interpret and draw freehand objects in orthogonal and pictorial view.

Objectives

At the end of this topic you should be able to:

- Identify by name the following types of pictorial representation used in engineering drawings:
  - orthographic
  - oblique
  - isometric
  - perspective
  - exploded view
- construct three view third angle orthogonal scale free hand drawings
- produce isometric freehand drawings
- convert isometric drawings to orthogonal drawings
- convert orthogonal drawings to isometric drawings
- read, analyse and apply sectioning techniques to engineering drawings

Projection – Methods of drawing

An engineering drawing must ideally show the true shape of an object as well as all necessary sizes to allow it to be made and interpreted correctly.

A pictorial drawing (axonometric, oblique or perspective) may give an instant impression of an object and its use, but be ineffective in showing correct proportions and dimensions as an orthogonal drawing would.

Distinctive features	Projection method		Application
	Generic	Particular	
Parallel lines of sight (Orthographic)	Orthogonal	Third angle (preferred) First angle	Generally a multiview drawing
	Axonometric	Isometric Dimetric Trimetric	Single view "Pictorial' drawings
	Oblique	Cavalier Cabinet General	
Converging Lines of sight	Perspective	One-point (parallel) Two-point (angular) Three-point (oblique)	

Orthogonal Projection

Multi-view orthogonal projection is used to describe the shape of an object. The resulting drawing consists of a number of systematically arranged views of the faces of the object. The views you get from the five different positions indicated on figure 1, are shown on figure 2.

The Australian Standard for drawing practice (AS1100) recommends third angle projection. This is the name given to the arrangement of the views relative to the **Front View**. The rule for third angle projection:

1. A view from the **Left** of the **Front View** is drawn on the left side **(Left Side View B)**
2. A view from the **Right** of the **Front View** is drawn on the right **(Right Side View E)**
3. A view from the **Top** of the **Front View** is drawn on the top **(Top View C)**
4. A view from the **Underside** of the **Front View** is drawn on the Underside **(Bottom View D)**

Advantages of orthogonal projection are:

- all sides are visible independently
- dimensioning is made easier
- all features are drawn in proportion

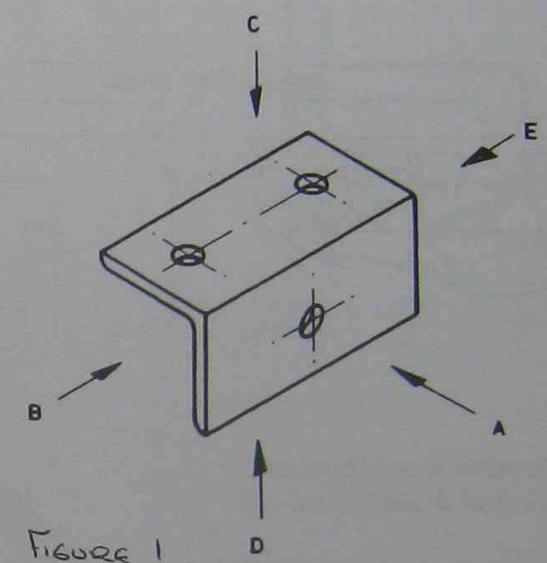

Figure 1

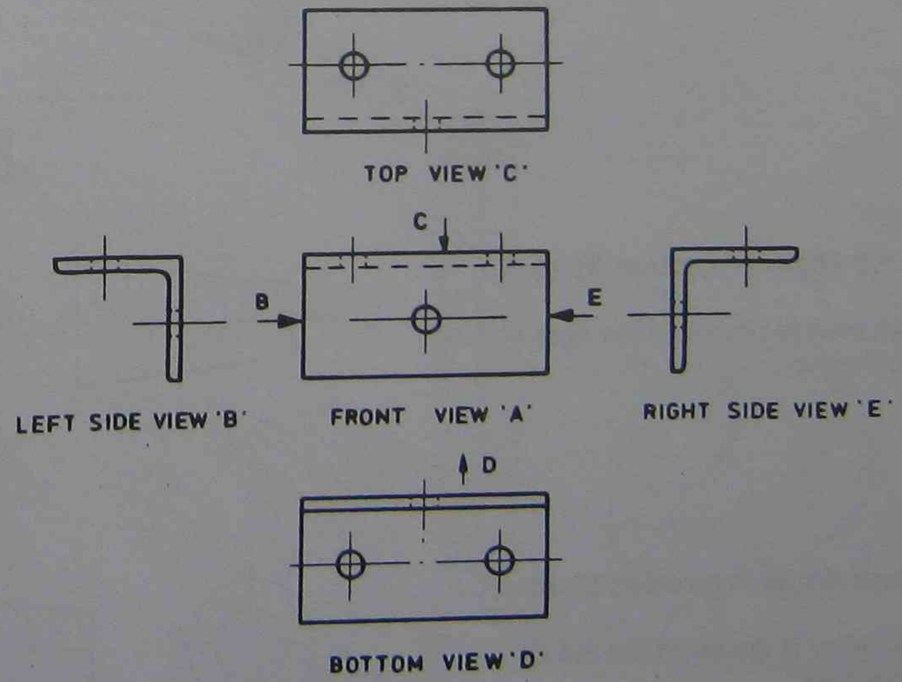

Figure 2

Projection symbol

All drawings that follow the AS 1100 standards must show which projection system they use. The symbol goes either in the title block at the top or bottom of the sheet with other details, or inside the grid lines, wherever it can be easily seen.

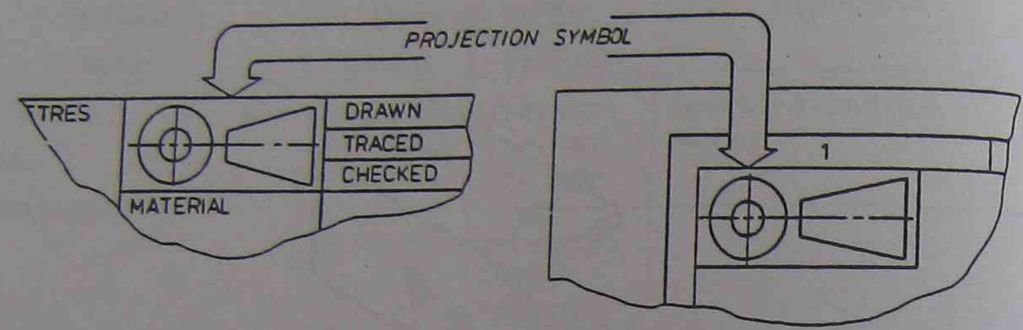

Type

The projection symbol is a third view orthogonal drawing of a solid cone with the point cut off.

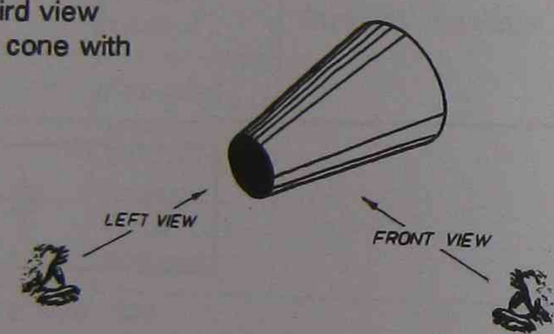

Type

First Angle Projection Symbol

Left view is drawn to the right of the front view

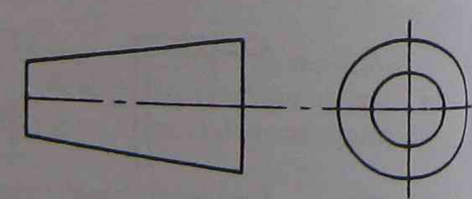

Type

Third Angle Projection Symbol

Left view is drawn to the left of the front view

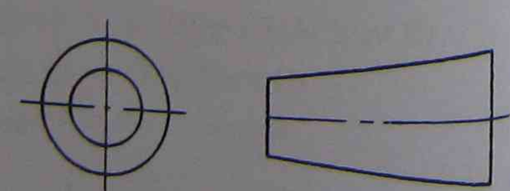

Type

EXERCISE: 1

SELECT THE CORRECT VIEWS

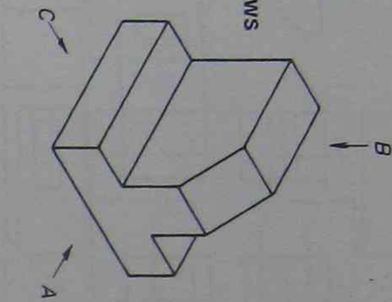

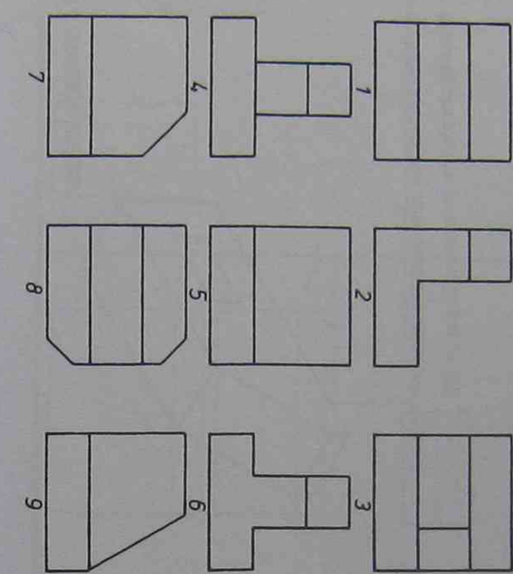

Which drawing shows the view from direction A?
Which drawing shows the view from direction B?
Which drawing shows the view from direction C?

A	
B	
C	

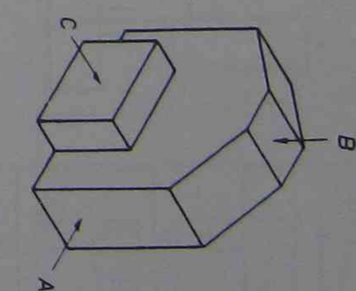

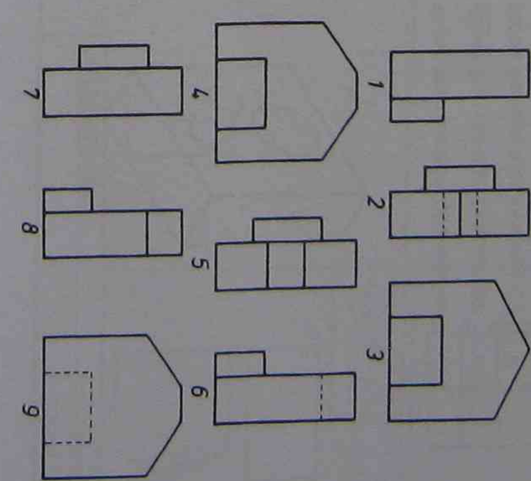

Which drawing shows the view from direction A?
Which drawing shows the view from direction B?
Which drawing shows the view from direction C?

A	
B	
C	