Lifts, Elevators, Escalators and Moving Walkways/Travelators

M.Y.H. Bangash and T. Bangash

LIFTS, ELEVATORS, ESCALATORS AND MOVING WALKWAYS/TRAVELATORS

A.A. BALKEMA PUBLISHERS LEIDEN / LONDON / NEW YORK / PHILADELPHIA / SINGAPORE

Lifts, Elevators, Escalators and Moving Walkways/Travelators

M.Y.H. Bangash

and

T. Bangash

Taylor & Francis
Taylor & Francis Group
LONDON / LEIDEN / NEW YORK / PHILADELPHIA / SINGAPORE

Library of Congress Cataloging-in-Publication Data

Bangash, M.Y.H.
Lifts, elevators, escalators and moving walkways/travelators / by M.Y.H. Bangash and T. Bangash.
p. cm.
Includes bibliographical references and index.
ISBN 0-415-36437-X (hardcover : alk. paper)
1. Elevators. 2. Escalators. I. Bangash, T. II. Title.

TJ1370.B36 2006
621.8’77--dc22

2005033632

This edition published in the Taylor & Francis e-Library, 2007.

“To purchase your own copy of this or any of Taylor & Francis or Routledge’s collection of thousands of eBooks please go to www.eBookstore.tandf.co.uk.”

Published by: Taylor & Francis/Balkema
P.O. Box 447, 2300 AK Leiden, The Netherlands
e-mail: Pub.NL@tandf.co.uk
www.balkema.nl, www.taylorandfrancis.com, www.crcpress.com

ISBN 0-203-02076-6 Master e-book ISBN

ISBN 10: 0-415-36437-X (Print Edition) ISBN 13: 978-0-415-36437-9

Contents

Preface

This book covers specifications, analyses and designs of various types of lifts (elevators), escalators and travelators (moving walkways). It comprises of three sections. Section I has three subsections. Chapter 1 gives a general introduction to types of lifts, escalators and travelators. The reader is also made aware of definitions and symbols used in the analysis and design of each one of these structures. Both classical and modern nomenclatures have been introduced which are currently used by the manufacturers. This subsection is supported by relevant references. Chapter 2 deals with specifications and design practices adopted by various manufacturers for lifts or elevators. Data, figures, graphs, tables and plates are provided and they are fully explained. The reader is advised living or practicing in a specific country to bring about changes and modifications in design practices, if required.

In this subsection, a number of techniques could be seen in the design of guided shoes, guide rails and buffers. A start is made with the electric lifts. Lift, wells, car frames and counterweights are discussed in great detail. Tables are included for buckling factors and buckling stresses which are needed to solve design problems of respective elements. Design expressions for forces during safety gear operation have been first stated and then derived. A due explanation is given regarding various assumptions considered in the evaluation of some of these essential equations. They are followed by a crystal cut methodology, supported by tabulated data, on the design of headroom, pit, landing depth, machine and pulley rooms. Next landing doors are introduced. Structural and mechanical strengths for compensating ropes, suspensions, safety gears and overspeed governors have been dealt with in greater detail. Various design equations adopted by the Euro-Code EN115 and ASME.AI7.I (1998) are included in the relevant tabulated data.

Hydraulic lifts are introduced on the lines suggested for electric lifts. A similar approach was adopted except new details on plungers together with variations driving machines are introduced initially. Design data and formulae for rated loads, elevator platform, safety factor, gravity stopping distances, power elevators and buffer stresses related to hydraulic lifts are dealt with explicitly.

Chapter 3 deals predominantly with the design specifications for escalators and moving walks or travelators. An introduction to these structures is first given. Various figures, tables, graphs and plates given herein adequately support their design specifications. Additional lists of symbols, apart from these given in Chapter 1, have been provided which are in line with Euro-Code EN 115. The reader is now empowered to assess the design formulae and compare them with those given in other codes. Definitions and general specifications based on EN115 are now provided. They cover specific components and their materials. Machines ancillary brakes, construction equipment, rated loads and escalators and other areas have been greatly dealt with. Brake calculations, design of steps, structural body analysis of escalators/travelators, speed, acceleration, treadways, emergency stopping and balustrade design have been adequately covered. Here various manufacturers have provided their own structural planning, detailing and data and practical drawings. They are included with due credit to individual companies. In addition, Acceptance Inspection methodology has been given a great coverage. Clauses are included for altered installations and their inspection and test requirements. Engineers while following this section, should pay special attention to individual country's specifications and practices.

The reader is now fully equipped with the detailed knowledge of specifications and design for all kinds of lifts, escalators and travelators or moving walkways. The comparative study has now paved the way for the analysis and design of elements making up these structures.

Section II now deals with the planning, analysis and design of components or elements of lifts/elevators. Chapter 4 covers belt and rope drives in much greater detail. The general introduction gives explanatory notes on lift tools, belt driven pulleys as means of changing or transmitting motion and power from an engine to a lift tool. Flate belts are introduced with driver and follower pulleys. A vast section is given on velocity ratio involving a number of properties including rope riding on grooved pulleys. Calculations for slip are given a prominent place in the section, compound belt drive together with an example on driving and follower pulleys have been given to clarify the basic principles. At this stage it was necessary for the reader to seek support for the analysis of evaluating length of belt in an open case drive and crossed drive. A typical example is given on cone diameter and a belt length.

Transmission of Power is next considered and a bast formulation exists to explain the concept and applications. An example on Horse Power/kilowatt is included. Centrifugal tension, commonly comes across, is considered. A numerical/design example of the subject is given to centrifugal tension. In order to transmit a considerable power, it is essential to produce a comprehensive analysis of rope drive. A single example explains the basic concept. Elevator rope data with examples on safety, rope elongation, traction forces on sheaves are now given. They are fully explained in Chapter 5. Tables, graphs and plates are given on drive and traction. Selected examples are given on their main design principles. Lifting/elevating machines are introduced with some analytical work and area relating to the capacity, choice of worm diameter and thermal performance.

A vast section is given on brake and braking systems, counterweight, car guide and car frame. Examples and relevant data are given. Next guide rails are examined in the light of the current codes. Tables and data include deflection and stresses in the guides during operations. Where impact analysis is required on those elements, the reader is advised to look out for the author's following text: 'Impact and Explosion-Analysis and Design (Blackwell Oxford 1993)'.

Next, types of guide shoes are given. It now becomes essential to look into the performance of buffers in detail. Analysis and examples are given on the buffer design.

After concluding the essential analysis of elements, car frame design becomes a necessity. A comprehensive analysis on car frame involving several boundary conditions is given under static and dynamic loading conditions. Relevant examples are given. A reference is made to the relevant finite element analysis.

Chapter 6 covers the travel analysis of lifts/elevators. Maximum/minimum stopping distances are explained and evaluated in Chapter 7. At the end of section II, references/bibliography are given for those who wish to carry out additional study in this area.

Section III covers the analysis of structural elements of moving walks or travelators. Having given description in Section I, it was felt to give again a general introduction together with data on moving walks.

A start is made on the rubber belt passenger conveyor type 55 of Schindler 9500. Various structural details are included for the reader to understand the working of these structures. Tables and plates give a complete list of the components forming the travelators. Next Fujitec GS8000 series of auto walk (travelators) are introduced with a number of functional details. A vast section is given on the elements of superstructures. Belt calculations, belt capacity and gears are included. Elements for supporting structures such as trusses, beams, girders etc., are next considered. Analytical methods are included for these elements. A special section is included on finite element analysis with particular reference to platforms and gears, step covers, contact analysis of involute teeth, tracks surfaces and waviness produced by random vibrations. Various results are obtained. Appendices I & III each give computerised analysis based on finite elements. Relevant references are given at the end of each section.

Design analysis of the elements of escalators is introduced in this section and is fully explained with design examples. The finite element technique forms a prominent part in this section.

As stated earlier in Section I, already, the description of these elements have been avoided. General information is given first. To begin with the reader after having a good idea about bearing in Section I, a comprehensive analysis is given for toothed gearing. Friction and toothed gearing and their analysis have been thoroughly examined. This is discussed by developing a comprehensive step-by-step analysis. A clear analysis is given for motion transmitted by toothed gearing. Next forms of wheel teeth and trains of wheel have been discussed. A substantial section exists on seals. They are all supported by numerical-cum-design examples. Higher pairing belt, rope and chain drives are discussed in greater detail. Various expressions have been developed on belt drives, belt tensions, crowned pulleys, coil friction to a surfaces of a cylinder, grooved pulleys and transmission of steel ropes and chains. Next roller chain selection methodology is given and threaded fastness. They are supported by design examples, tables and graphs.

Finite Element Analysis of Bolt-nut connection has been carried out which includes thread part of the bolt and the nut. A precision element mash is included for the thread owing to its intrinsic complicated geometry. A step-by-step procedure for the initial coarse model coupled with submodeling for this complicated analysis has been fully dealt with. Analysis and design for gears are next considered. Spur gears with specific geometrical characteristics with an involute system have been examined.

Gear tooth generation, tooth thickness and stress, calculations with detailed analyses have been given. Bending stresses and contact stresses for various cut teeth have been explicitly derived. They are followed by a comprehensive finite element analysis of gears. Examples are given to explain the philosophy of the analytical methods given therein.

Glass pans and escalator/travelator post have been analyzed. Codified methods exist on the evaluation of design stresses and deflection's limits. Sloping glazed panels are considered. Examples exist on glass columns/posts, glass balustrades and in-filled panels.

The book has the flexibility to include additional analytical and design topics and case studies. This book can be used by engineers, technologists, specialists in lifts, escalators or moving walkways. The book is readily available for bureaus who are involved in computer aided works and finite element modeling of steel structures under static and dynamic loads. Civil/structural and mechanical engineers can take advantage of this text and can redesign out their own installations and other structures.[1]

This book is also useful for post graduate mechanical and industrial engineering courses.

M.Y.H. BANGASH
T. BANGASH

[1] The architects can easily use the data for planning their own drawings and detailings.

Acknowledgements

The authors are indebted to many individuals, institutions, organizations and research establishments, mentioned in the book, for helpful discussions and for providing useful practical data and research materials.

The authors owe a special debt of gratitude to their family who provided unwavering support, especially Dr. F.N. Bangash for checking some of the hand calculations and for checking the final layout.

We also wish to acknowledge the help given by the following:

Mr. Mike Chrimes and his staff, the Institution of Civil Engineers Library, London.
The Institution of Structural Engineers Library, London.
The American Society of Mechanical Engineers, New York.
The Institution of Mechanical Engineers, London, particularly Mr. Mike Claxton in the Library of I.Mech.E. who went out of the way to provide extensive materials.
The Royal Institute of British Architects, London.
The staff of the British Library, Kings Cross, London.
The British Standard Institution, London.
The Building Research Establishment (BRE) U.K.
The European Union Standards (ENS), Brussels, Belgium.
The European Union Library, Brussels, Belgium.
Transport and Road Research Laboratory, Crowthorne, Berkshire, U.K.
U.S. Agency for International Development, Washington D.C.
The London Underground Co., London.
The Institute of Steel Construction, U.K.

The authors wish to express their appreciation and gratitude to the following companies and manufacturers who allowed the authors to use their drawings, data, and specifications and some of which are reproduced in the text.

- Otis Lifts And Escalators, Bermondsey Trading Estate, Rotherhithe New Road, London SE16 (Representative Mr. Gosh).
- Fujitech (Elevators. Escalators), Japan, U.K. Ltd.
- Schindler (Lifts, Escalators and Moving walk), Zurich, Switzerland.
- Kone Escalators, Keighley, West Yorkshire, U.K. for data/drawings on Escalators (Brian White).

Dr. Ing Fritz Notzold, Consulting Engineers, Langern, Germany
Michael Joseph Ltd, USA

This acknowledgement would be incomplete without praising the enormous help given by the then computer bureau STRUCOM Ltd, London, and the FEA, Kingston, Surrey, U.K. Furthermore the following bureaus have been extending extraordinary help for the text.

- DIANA ANALYSIS, Delft, The Netherlands
- ABACUS, Manchester, U.K.
- ANSYS Ltd, U.K.
- Lift Manufacturing Association of New York
- Elevator World, U.S.A.

- UMIST Computer Centre and High Energy Section of the Mechanical Engineering Department, UMIST.
- Faber Maunsell Consultants, U.K.
- Corus U.K.

The authors are deeply indebted to Dr. L. Janovsky of the Technical University of Prague for his extraordinary help extended to the authors.

Again the acknowledgement would be incomplete without praising the extra ordinary skill displayed by MISS MATINA THEODOROPOULOS, of Naflion Greece, for typing the text and organizing art work for the text.

The authors acknowledge that owing to unified approach, many symbols given in original had to be replaced by new ones.

Conversion table

CONVERSION FACTORS

Imperial units	SI units	Additional
1 in	= 25.4 mm	
1 in^3	= 0.003785 (m^3)	
1 ft	= 40.48 cm	
1 ft^2	= 0.09290(m^2)	1 ft^3 = 0.02832 (m^3)
10 ga	= 3.57 mm	1 cu yard = 0.765 (m^3)
18 ga	= 1.27 mm	
1 lb	= 0.454 kg	
1 ton	= 9.964 kN	
1 sq ft	= 0.929 m^2	
1 cubic ft	= 16.4 $(cm)^3$	
1 psi	= 6.89 kPa	= 6895 Pascal (Pa)
20 T/ft^2	= 1915.2 kN/m^2	
1 lb/sq ft	= 992.16 kPa	= 47.88 Pascal (Pa)
1 lb/ft^3	= 16.02 kg/m^3	
1 ft/lb	= 1.356 Nm	
1 ft/sec	= 0.3048M/s	
1 slug	= 14.59 kg	
1 in lb	= 0.1129848 Nm	
1 kip/in	= 175.1268 kN/m	
1 bar	= 100 kN/m^2	
1 kip	= 1000 lb	= 4.448 kN
1 short ton (2000 lb)	= 0.9072 Megagram (Mg)	
MKS units	**SI units**	
1 Pascal (Pa)	= 1 N/m^3	
1 kgm	= 9.807 Nm	
1 kgf	= 9.807 N	
	Temperature in °C (Celsius)	
1°F (Fahrenheit) = $t_f = \frac{5}{9}$ K;		$t_c = (t_f - 32)/118$
1°C		$t_f = 1.8t_c + 32$
1 BTU = 1055J		
1 m^2/g	= 1000 m^2/kg	
1 mm/mg	= 1m^2/kg	
1 radian	= 57.296 deg	
1 ft/sec	= 0.3048 m/sec	

Section I

Lifts, Elevators, Escalators and Moving Walkways/Travelators

1

Definitions of systems and notations for lifts/elevators/escalators and moving walkways

1.1 INTRODUCTION

Lifts are sometimes called Elevators which lift people and/or equipment to certain landing levels. They are classified on the basis of driving methods, thereby, using different design principles and different methods of construction of components. The following are the three major classifications, generally, recognized by the designers and manufacturers:

(a) Electric lifts
(b) Hydraulic lifts
(c) Pneumatic lifts.

A typical panoramic view of the lift in operation is given in Fig. (1.1).

Escalators are also used in modes of vertical transportation and are placed in inclined positions steps rising and flattering. Fig. (1.2) shows a typical layout of an escalator. A description of escalator components is also given.

The *Travelators* or *moving walkways* are identical to Escalators, except their surface along the travel are smooth from end to end. They can be inclined and horizontal during the travel. Fig. (1.3) shows a typical layout of a travelator or moving walkway. They are sometime called *Passenger conveyors.*

They are installed in major commercial buildings such as airports, department stores and underground metro stations etc. Their functions are to transport majority passengers and their escorted or unescorted luggage.

Safety, reliability and efficiency shall be all hallmarks of lifts, escalators, and travelators. The technical data for each one together with specifications and methods of analysis are fully dealt with under each caption later on in the text.

1.2 DEFINITIONS FOR LIFTS

Authorised and instructed user: Person authorised by the person responsible for the installation to use lift and who has been instructed in its use.

Available car area: Area of the car measured at a height of 1.0 m above floor level, disregarding handrails, which is available for passengers or goods during operation of the lift. In the case of a car without doors, a strip 0.1 m deep in front of each car sill is omitted from the calculation of the available area.

Buffer: A resilient stop at the end of travel, and comprising a means of braking using fluids or springs (or other similar means).

Goods passenger lift: A lift mainly intended for the transport of goods, which are generally accompanied by persons.

Guides: The components which provide guiding for the car sling or the counterweight, if there is one.

Instantaneous safety gear: A safety gear in which the full gripping action on the guides is almost immediate.

Figure 1.1. Panoramic view of lift (with compliments from OTIS company, U.K.).

Instantaneous safety gear with buffed effect: A safety gear in which the full gripping action on the guides is almost immediate, but the reaction on the car or counterweight is limited by presence of an intermediate buffering system.

Jack (Heber): A combination of a cylinder and Ram forming a hydraulic actuating unit.

Levelling: An operation which improves the accuracy of stopping at landings.

Lift: A permanent lifting equipment serving defined landing levels, comprising a car, whose dimensions and means of construction clearly permit the access of persons; running at least partially between rigid vertical guides or guides whose inclination to the vertical is less than 15°.

Lift car: A part of the lift which carries the passengers and/or other loads.

Lift machine: The unit including the motor which drives and stops the lift.

Machine room: A room in which machine or machines and/or the associated equipment are placed.

Minimum breaking load of a lifting rope: This load is the product of the square of the nominal diameter of the rope (in square millimetres) and the nominal tensile strength of the wires (in

Figure 1.2a.

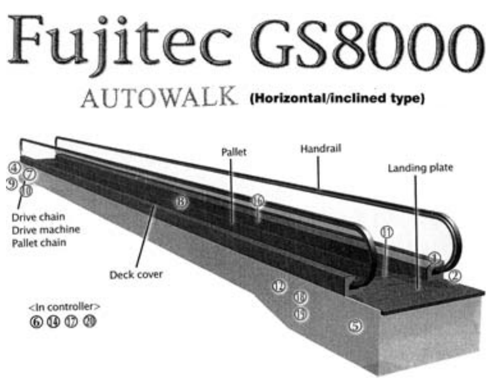

Figure 1.2b.

newtons per square millimetres) and a coefficient appropriate to the type of rope construction. (ISO 2532).

The effective breaking load obtained in a rupture test on a sample of rope following a defined method, shall be at least equal to the minimum breaking load.

Non commercial vehicle lift: A lift whose car is suitably dimensioned for carrying private motor cars.

Non-return valve: A valve which allows flow in one direction.

One-way restrictor: A valve which allows free flow in one direction and restricted flow in the other direction.

Over-speed governors: A device which, when the lift attains a pre-determined speed, causes the lift to stop, and if necessary causes the safety gear to be applied.

Passenger: Any person transported by a lift.

Pit (cuvette): The part of the well situated below the lowest landing level served by the car.

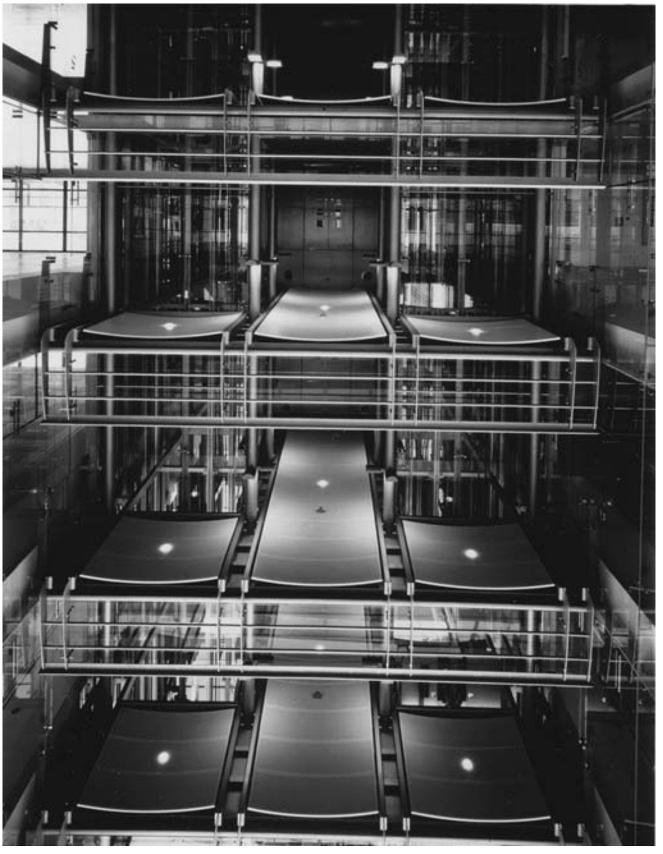

Figure 1.3. Typical layout of travelators (with compliments from Mr. Ghosh, OTIS company, U.K.).

Positive drive lift (includes drum drive): A lift suspended by chains or lifting ropes driven by means other than friction.

Positive drive service lift (includes drum drive): A service lift suspended by chains, or ropes driven by means other than friction.

Progressive safety gear: A safety gear in which deceleration is effected by a braking action on the guides and for which special provisions are made so as to limit the forces on the car or counterweight to a permissible value.

Pulley room: A room not containing the machine, and in which pulleys are located and in which the over-speed governors and the electrical equipment may also be housed.

Pawl device: a mechanical device for stopping involuntary descent of the car, and maintaining it stationary on fixed supports.

Pressure relief valve: A valve which limits the pressure to a pre-determined value by exhausting fluid.

Restrictor: A valve in which the inlet and outlet are connected through a restricted passage way.

Rated load: The load for which the equipment has been built and for which normal operation is guaranteed by the vendor.

Rated speed: The speed of the car for which the equipment has been built and for which normal operation is guaranteed by the vendor.

Re-levelling: An operation, after the lift has stopped, to permit the stopping position to be corrected during loading or unloading, if necessary by successive movements (automatic or inching).

Safety gear: A mechanical drive for stopping, and maintaining stationary on the guides, the lift car or counterweight in case of overspeeding in the downward direction or breaking of the suspension.

Safety rope: An auxiliary rope attached to the car and the counterweight for the purpose of tripping a safety gear in case of suspension failure.

Service lift: A permanent lifting equipment serving defined landing levels, comprising a car, the interior of which is inaccessible to persons on account of its dimensions and means of construction, running at least partially between rigid vertical guides or guides whose inclination to the vertical is less than 15°.

To satisfy the condition of inaccessibility, the car dimensions do not exceed:

(a) floor area $1.00\,m^2$
(b) depth 1.00 m
(c) height 1.20 m

A height greater than 1.20 m is permissible, however, if the car comprises several permanent compartments, each of which satisfies the above requirements.

'Shut-off' valve: A manually operated two-way valve which can permit or prevent flow in either direction.

Single acting jack (Heber): Jack in which displacement in one direction fluid action and in the other by another force.

Sling: The metal framework carrying the car or counterweight, connected to the means of suspension. This sling may be integral with the car enclosure.

Toe guard: An apron having a smooth vertical part extending downwards from the sill of the landing or the car entrance.

Traction drive lift: A lift whose lifting ropes are driven by traction in the grooves of the drive lift.

Traction drive service lift: A service lift whose lifting ropes are driven by friction in the grooves of the driving sheave of the machine.

Unlocking zone: A zone, extending above and below the stopping level, in which the car floor must be to enable the corresponding landing door to be unlocked.

User: Person making use of the services of a lift installation.

Well: The space in which the car and the counterweight, if there is one, travels. This space is bounded by the bottom of the pit, the walls and the roof of the well.

Toe guard: An apron having a smooth vertical part extending downwards from the sill of the landing or car entrance.

Unlocking zone: A zone, extending above and below the stopping level, in which the car floor must be to enable the corresponding landing door to be unlocked.

User: Person making use of the services of a lift installation.

Well: The space in which the car and the counterweight, if there is one, travels. This space is bounded by the bottom of the pit, the walls and the roof of the well.

1.3 MAJOR INTERNATIONAL SYMBOLS RELATED TO LIFTS/ ELEVATORS AND ESCALATORS

A = cross-sectional area of the guide (mm^2);
A_n = cross-sectional area of the material of ram to be calculated ($n = 1, 2, 3$) (mm^2);
a = absorption coefficient of the radiation measuring apparatus (%);
= standard acceleration of free fall (m/s^2);
= amplitude of vibration (mm);
c_m = reeving ratio;
C_r = mass necessary to compress the spring of the buffer completely (kg);

C_o = additional wall thickness (m);
C_1 = coefficient taking account of the acceleration, deceleration and specific conditions of the installation;
C_d = car depth between inner surfaces of the car walls measured at right angles (m);
C_h = car height between the entrance threshold and the constructional roof of the car (m);
C_w = car width between the inner surfaces of the car walls measured parallel to the front entrance (m);
C_2 = coefficient taking account of the variation in profile of the traction sheave groove due to wear;
D = diameter of traction sheave (mm);
d = diameter of traction ropes (mm);
d_m = outside diameter of biggest ram of a telescopic jack (mm);
d_{mi} = inner diameter of biggest ram of a telescopic jack (mm);
E = modulus of elasticity (N/mm^2);
= width of the free passage of the door being tested (m);
E_w, E_h = width and height of the entrance measured when the landing and the car doors are fully open (m);
e = base of natural logarithms;
F = conversion factor for radiation measurements or Load/Force (kN) or (N);
F_1 = vertical force on each guide or other part imposed during operation of safety gear or clamping device (N);
F_{10} = total vertical force on guides or other part imposed during operation of safety gear or clamping device (N);
F_2 = vertical force on each fixed stop imposed during operation of pawl device (N);
F_{20} = total vertical force on fixed stops imposed during operation of pawl device (N);
F_3 = reaction below each guide rail (N);
F_4 = reaction below car buffer supports (N);
F_5 = actual buckling force applied (N);
F_L = total compression of the spring (m);
F_7 = the higher value of both forces F_1 and F_2 (N);
f = coefficient of friction of ropes in traction sheaves grooves;
f_y = yield stress (MN/m^2);
G = rigidity modulus (MN/m^2);
g_n = braking deceleration of the car (m/s^2);
H = height of a certain dimension (m);
h = height of a specific dimension of free falling height-or thickness (m);
I = second moment of inertia (m^4);
i = radius of gyration (mm);
i_e = equivalent radius of gyration of a telescopic jack (mm);
i_n = radius of gyration of the ram to be calculated (n = 1, 2, 3) (mm);
J = polar moment of inertia (m^4);
= Jacobian matrix;
J_n = second moment of area of the ram to be calculated (n = 1, 2, 3) (mm^4);
K, K_1, K_2 = energy which can be absorbed by one safety gear block;
L = length or vertical dimension or span (m);
l = width of the 'door assembly' being tested;
= maximum length of rams subject to buckling (m);
l_k = maximum distance between guide brackets (mm);
M = Moment or Bending moment (kNm);
n = number of ropes or chains; Limit state parameter for Buckling Analysis;
n_v = number of panels of the door being tested;
O = parameter for Buckling Analysis;

P = rated loads (kg);
= load intensity (kN);
= Pressure (kN/m^2);
P_h = pit depth (m);
P_1 = sum of the mass of the empty car, the mass of the ram (in case of direct acting lifts only) and the mass of the portion of the travelling cables suspended from the car (kg);
P_2 = sum of the mass of the empty car and of the mass of the ram (in case of direct acting lifts only) (kg);
P = sum of the mass of the empty car and the masses of the portion of the travelling cables and any compensation devices, suspended from the car (kg);
P_3 = sum of the mass of the empty car and the mass of the portion of the travelling cables, suspended from the car (kg);
P_r = mass of the ram to be calculated (kg);
P_{rh} = mass of the ram-head equipment, if any (kg);
P_{rt} = mass of the rams acting on the ram to be calculated (in the case of telescopic jacks) (kg);
p = full load pressure (MN/m^2);
Q = rated load (mass) displayed in the car (kg);
$(P + Q)_1$ = total permissible mass (kg);
R_m = tensile strength of material (N/mm^2);
= equivalent coefficient of slenderness of a telescopic jack;
$R_{p0.2}$ = proof stress (N/mm^2);
R_a = area of machine room floor (m^2);
R_d = machine room depth (m);
R_w = machine room width (m);
S = plastic section modulus (cm^3);
= parameter in the analysis;
T = static force in the Ropes to the car at the level of the traction sheave when the car is stationary at the lowest level with its rated load (N, kN, MN);
$\frac{T1}{T2}$ = ratio between the greater and the smaller static force in the parts of the rope located on either side of the traction sheave;
u, υ, U_h = overall head room between roof and the machine room ceiling (m);
v_c = speed of the ropes or any other component (m/s);
v_s, v_m, v_d = rated speed upward and downward (m/s);
v_1 = stripling speed (m/s);
W_1 = radiation intensity at a distance of 1 m (W/cm^2);
W_Z = radiation intensity measured at a distance equal half to the diagonal of the door entrance being tested (W/cm^2);
W_d, W_w = well depth and width (m);
X, x, Y, y = parameters;
Y = Yield stress (N/mm^2);
ν (nu) = factors used to represent approximate values given by experimentally
ϕ (phi) determined diagrams;
μ = coefficient of friction between steel wire ropes sheaves;
α = angle of wrap of the ropes on the traction sheave (rad);
β = angle of the undercut grooves or semicircular grooves in the traction sheave (rad);
γ = angle of the vee grooves in the traction sheave (rad);
p = specific pressure of the ropes in the traction sheave grooves (N/mm^2);
ρ = ratio;
σ = stress (N/mm^2);
σ_K = buckling stress in the guides during safety gear operation (N/mm^2);

ω = circular frequency (C/S);
= uniform load per length;
= buckling factor (kN/m);
λ = buckling factor;
= coefficient of slenderness;
λ_e, λ_n = coefficient of slenderness of the ram to be calculated (n = 1, 2, 3).

1.4 SYMBOLS (BASED ON CLASSICAL METHODS OF ANALYSIS/DESIGN)

A = heat generated by friction on a brake drum;
= cross-sectional area of the guide;
C = gear centre distance (mm);
C_1 = coefficient taking account of acceleration, deceleration and specific conditions of the installation;
C_2 = coefficient taking account of the variation in profile of the sheave groove due to wear;
D = pitch diameter of the sheave (mm or m);
D_1 = worm reference diameter (mm);
D_s = central diameter of the spring (mm);
E = Young's modulus of elasticity (N/mm^2);
E_k = kinetic energy of door system (J);
F = maximum static load imposed on elevator ropes (N);
= operating force to engage the jaws of a safety gear retarding force of a buffer (N);
F_a = axial thrust (N);
F_b = braking force (N);
F_o = initial retarding force of an oil buffer (N);
F_r = radial force (N);
F_t = tangential force (N);
F_x, F_y = forces imposed on guide rails at right angles (N);
G = modulus of elasticity in torsion (shear) (N/mm^2);
H = height of travel (m);
I = moment of inertia of all moving part of the system ($kg\,m^2$);
I_1 = moment of inertia of the rotor, brake Drum and worm ($kg\,m^2$);
I_2 = moment of inertia of the worm wheel and sheave ($kg\,m^2$);
I_3 = moment of inertia of all parts of the system in linear motion ($kg\,m^2$);
J = moment of inertia of the cross-sectional area of the guide rail (mm^4);
J_p = polar moment of inertia (related to the perpendicular axis at the centre of gravity of the sectional area) (mm^4);
K = mass of the car (kg);
L = sound pressure level (dB);
M = torque (generally) (N m);
= sum of the mass of the empty car and the masses appropriate portion of the travelling cable and any compensating device, suspended from the car (kg);
= total load on buffer (kg);
M_1 = torque on the worm (N m);
M_2 = torque on the worm wheel (N m);
M_b = braking torque (N m);
M_d = driving torque on the low-speed shaft (N m);
M_{oz} = bending moment (N m);
M_p = torque necessary to cover frictional resistances (N m);
M_i = dynamic torque (N m);
M_s = torque on the traction sheave (N m);

M_{st} = static torque (N m);
M_t = torsional moment (N mm);
N = minimum breaking load of one suspension rope (N);
= normal reaction force (N);
= number of teeth of the worm wheel;
P = output of the driving motor (kW);
ΔP, P_v = power loss (kW);
P_e = equivalent output (kW);
P_p = motor input (kW);
Q = rated load (kg);
= heat dissipated from a worm gearbox (kJ/s);
R = resultant reaction force (N);
R_a = surface roughness (μm);
S = generally cross-sectional area (m^2);
= outer surface of a gearbox (m^2);
S_p = piston area (m^2);
T = generally tensile force in suspension ropes (N);
= tangential reaction force (frictional resistance) (N);
T_1 = greater static tensile force in suspension ropes on either side of the sheave (N);
T_2 = smaller static tensile force in suspension ropes on either side of the sheave (N);
Z = mass of the counterweight (kg);
= number of teeth (generally);
α = generally acceleration (m/s);
α_o = braking deceleration of the car (m/s^2);
b = initial retardation (m/s^2);
= width of the undercutting of a sheave groove (mm);
c = width of the car (mm);
= depth of the car (mm);
= stiffness of the spring (N/m);
d = thermal capacity ($J\,kg^{-1}\,{}^\circ C^{-1}$);
= nominal rope diameter (mm);
= diameter of the wire of a helical spring (mm);
e = distance between guide rails (mm);
= base of natural logarithms;
e_x, e_y = eccentricity of the braking force (mm);
f = eccentricities of the centre of gravity the load in the car (mm);
= factor of safety of suspension ropes;
f_r = coefficient of friction in a sheave groove;
g_n = resonance frequency (1/s);
h = standard acceleration of free fall (m/s^2);
= vertical distance between guide shoes (mm);
i = total buffer stroke (mm);
= roping factor;
i_G, I_p = radius of gyration (mm);
k = gear ratio;
l = heat transfer coefficient ($kJ\,m^{-2}\,K^{-1}\,s^{-1}$);
= length of the threaded portion of a drum (mm);
= length of a helical spring exposed to torsion (mm);
= span of the guide rail brackets (mm);
= generally span of a beam (mm);
= free length of the uprights (mm);
l_k = maximum distance between guide rail brackets (mm);
m = generally mass (kg);

m_L = mass of one fall of suspension ropes (kg);
m_b = mass of supporting beams under the elevator machine (kg);
m_m = mass of elevator machine including the frame (kg);
m_s = mass of the source of vibration (kg);
n = r.p.m.;
= number of suspension ropes;
= number of starts of the worm;
= number of active threads of a spring;
n_1 = r.p.m. of the worm;
n_2 = r.p.m. of the motor at the beginning of braking;
n_m = r.p.m. of the motor;
p = specific pressure (N/mm^2);
q = unit load (kg/m);
q_e = unit weight of travelling cables (kg/m);
q_k = unit weight of compensating cables (kg/m);
$*q_o$ = total area of all escape holes of an oil buffer (m^2);
$*q_y$ = total area of escape holes below the piston (m^2);
s = stiffness of resilient mounting of an elevator machine (N/m);
t = lead of thread of a drum (mm);
= axial pitch of the worm (mm);
= generally time (s);
t_b = braking time (s);
v = rated speed (m/s);
= velocity of the piston of an oil buffer (m/s);
v_a = average door velocity (m/s);
v_C = rope speed (m/s);
v_{max} = maximum door velocity (m/s);
v_p = circumferential velocity at worm reference diameter (m/s);
w = discharge velocity (m/s);
x = compression of the buffer (mm);
y = variable length of the travelling cable under the car (m);
= deflection of guide rail (mm);
= radial deflection of the worm at the pitch point (mm);
z = number of operations (starts) per hour (1/h);
= variable distance from the car to its lowest level (m);
α = angle of wrap of the traction sheave;
= angle of the wedge (instantaneous safety gear);
= coefficient of heat transfer ($J\,m^{-2}\,°C^{-2}\,s^{-1}$);
α_n = normal pressure angle (worm gearing);
β = angle of the undercutting of a sheave groove;
γ = angle of vee groove;
= oil density (kg/m^3);
δ = angle of outer normal lines of the contact area in a round seated or undercut groove;
φ = angle of distortion (rad);
ϕ = angle of contact in a radial plane of a round seated or undercut groove;
= angle of friction of worm gearing;
= angle of torsion (rad);
ϕ_1 = angle of friction between the jaw and the supporting block of an instantaneous safety gear;
ϕ_2 = angle of friction between the jaw and the guide rail;
λ = lead angle of the worm thread;
= coefficient of slenderness or slenderness ratio;

μ = actual coefficient of friction between the rope and a shear groove;
= coefficient of friction of worm gearing;
= discharge coefficient;
ν = viscosity of oil (mm^2/s);
η_c = mechanical efficiency of chain drive;
η_G = tooth efficiency of worm gearing for worm driving;
$\eta_{G'}$ = tooth efficiency of worm gearing for worm wheel driving;
η_L = efficiency of a bearing;
η_m = motor efficiency;
η_o = overall efficiency of worm gearing for worm driving;
$\eta_{o'}$ = overall efficiency of worm gearing for worm wheel driving;
η_{RS} = efficiency of the roping system;
η_S = efficiency of the sheave;
η_2 = mechanical efficiency of the system related to the conditions of braking;
ψ = coefficient taking account of the percentage of the rated load balanced by the counterweight;
= Walh's coefficient;
σ_k = stress in guide rails due to the safety gear operation (N/mm^2);
θ = temperature (°C);
τ = time heating constant (s);
θ = coefficient relating M and (Q + K);
$\Delta\theta$ = temperature increment (K);
θ_α = temperature of ambient air (°C);
θ_L = maximum permissible temperature of oil in the gearbox (°C);
ω = angular velocity (1/s);
= buckling factor;
ε = angular retardation ($1/s^2$);
= load factor (%);

1.5 SYMBOLS (BASED ON MODERN METHODS OF ANALYSIS)

Unless otherwise stated, the following symbols are adopted:

A = cross-sectional area;
I = second moment of area;
I_p = polar moment of area;
J = torsional constant;
l = length;
t = thickness or time;
T = torque;
M = bending moment;
n = frequency (Hz);
r = radius;
R_1, R_2 = radii at nodes 1 and 2 respectively;
$\bar{c}$ = speed of sound
= $\sqrt{K/\rho}$
K = bulk modulus;
E = elastic modulus;
G = rigidity modulus;
x, y, z = coordinates (local axes);
X, Y, Z = coordinates (global axes);
F_x, F_y, F_z = forces in x, y and z respectively;

u, v, w = displacements in x, y and z directions respectively;
u_x, v_y, w_z = displacements in x, y and z directions respectively;
a = angle;
λ = eigenvalue;
ω = radian frequency;
ρ = density;
ρ_F = density of the fluid;
σ = stress;
ε = strain;
τ_{xy} = shear stress in the $x-y$ plane;
γ_{xy} = shear strain in the $x-y$ plane;
υ = Poisson's ratio;
μ = $v/(1-v)$;
ξ = x/l;
$[k]_e$ = elemental stiffness matrix in local coordinates;
$[k_G]$ = elemental stiffness matrix in global coordinates;
$[k]_C$ = geometrical stiffness matrix in local coordinates;
$[k_G]_G$ = geometrical stiffness matrix in global coordinates;
$[m]$ = elemental mass matrix in local coordinates;
$[m_G]$ = elemental mass matrix in global coordinates;
$[K^0]_G$ = system stiffness matrix in global coordinates;
$[K_G^0]$ = geometrical system stiffness matrix in global coordinates;
$[M_G]$ = system mass matrix in global coordinates;
$\{P_i\}$ = a vector of internal nodal forces;
$\{q^0\}$ = a vector of external nodal forces in global coordinates;
$\{u_i\}$ = a vector of nodal displacements in local coordinates;
$\{u_i\}_G$ = a vector of nodal displacements in global coordinates;
$[K_{11}]$ = that part of the system stiffness matrix that corresponds to the 'free' displacements;
$[K_{G11}]$ = that part of the geometrical system stiffness matrix that corresponds to the 'free' displacements;
$[M_{11}]$ = that part of the system mass matrix that corresponds to the 'free' displacements;
$[C_v]$ = a matrix containing viscous damping terms;
$[\Xi]$ = a matrix of directional cosines;
$[I]$ = identity matrix;
[] = a square or rectangular matrix;
{ } = a column vector;
[0] = a null matrix;

1.6 SYMBOLS (USED IN PART 1.1 OF EUROCODE 3)

A = accidental;
= Area;
a = average (yield strength);
a, b … = First, second … alternative;
b = Basic (yield strength);
= Bearing, buckling;
= bolt, beam, batten;
C = capacity, consequences;
c = cross-section;
= concrete, column;
com = compression;

cr = critical;
d = design, diagonal;
dst = destabilizing;
E = Effect of actions (with d or k);
= euler;
eff = effective;
e = effective (with further subscript);
eℓ = elastic;
ext = external;
f = flange, fastener;
g = gross;
G = permanent action;
h = height, higher;
= horizontal;
i = inner;
inf = inferior, lower;
i, j, k = indices (replace by numeral);
j = joint;
k = characteristic;
ℓ = lower;
L = long;
LT = lateral-torsional;
M = material;
= (allowing for) bending moment;
m = bending;
= mean;
max = maximum;
min = minimum;
N = (allowing for) axial force;
n = normal;
net = net;
nom = nominal;
o = hole;
= initial;
= outer;
= local buckling;
= point of zero moment;
ov = overlap;
p = plate;
= pin;
= packing;
= preloading (force);
= partial;
= punching shear;
pℓ = plastic;
Q = variable action;
R = resistance;
r = rivet;
= restraint;
S = internal force;
= internal moment;
s = tensile stress (area);
= slip;

	= storey;
	= stiff; stiffener;
ser	= serviceability;
stb	= stabilizing;
sup	= superior;upper;
t (or ten)	= tension;tensile;
	= torsion;
u	= major axis of cross-section;
	= ultimate (tensile strength);
ult	= ultimate (limit state);
V	= (allowing for) shear force;
v	= shear;
	= vertical;
	= minor axis of cross-section;
vec	= vectorial effects;
w	= web; weld;
	= warping;
x	= axis along member; extension;
y	= Yield;
	= axis of cross-section;
z	= axis of cross-section;
σ	= normal stress;
τ	= shear stress;
$\perp$	= perpendicular;
//	= parallel;

1.6.1 *Latin upper case letters*

A	= accidental action;
	= area;
B	= bolt force;
C	= capacity;
	= fixed value;
	= factor;
D	= damage (fatigue assessment);
E	= modulus of elasticity;
	= effect of actions;
F	= action;
	= force;
G	= permanent action;
	= shear modulus;
H	= Total horizontal load or reaction;
I	= second moment of area;
K	= stiffness factor (I/L);
L	= length; span; system length;
M	= moment in general;
	= bending moment;
N	= axial force;
Q	= variable action;
R	= resistance; reaction;
S	= internal forces and moments (with subscripts d or k);
	= stiffness (shear, rotational … stiffness with subscripts v, j …);

T = torsional moment;
= temperature;
V = shear force;
W = section modulus;
= total vertical load or reaction;
X = value of a property of a material;

1.6.2 *Greek upper case letters*

Δ = difference in … (precedes main symbol);

1.6.3 *Latin lower case letters*

a	= distance; geometrical data;
	= throat thickness of a weld;
	= area ratio;
b	= width; breath;
c	= distance; outstand;
d	= diameter;
	= depth;
	= length of diagonal;
e	= eccentricity;
	= shift of centroidal axis;
	= edge distance; end distance;
f	= strength (of a material);
g	= gap;
	= width of a tension field;
h	= height;
i	= radius of gyration; integer;
k	= coefficient; factor;
l (or ℓ or L)	= length; span; buckling length *);
n	= ratio of normal forces or normal stresses;
	= number of …;
p	= pitch; spacing;
q	= uniformly distributed force;
r	= radius; root radius;
s	= staggered pitch; distance;
t	= thickness;
uu	= major axis;
vv	= minor axis;
xx, yy, zz	= rectangular axis;

1.6.4 *Greek lower case letters*

α (alpha)	= angle; ratio; factor;
	= coefficient of linear thermal expansion;
β (beta)	= angle; ratio; factor;
γ (gamma)	= partial safety factor; ratio;
δ (delta)	= deflection; deformation;
ε (epsilon)	= strain;
	= coefficient = $[253/f_y]^{0.5}$ (f_y in N/mm^2);
η (eta)	= coefficient (in Annex E);
θ (theta)	= angle; slope;
λ (lambda)	= slenderness ratio; ratio;

μ (mu) = slip factor; factor;
ν (nu) = Poisson's ratio;
ρ (rho) = reduction factor;
= unit mass;
σ (sigma) = normal stress;
τ (tau) = shear stress;
Φ (phi) = rotation; slope;
= ratio;
X (chi) = reduction factor (for buckling);
Ψ (psi) = stress ratio;
= reduction factor;
= factors defining representative values of variable actions.

NOTE: Individual manufacturers have, for known reasons of commercial safety, adopted their own symbols. The reader must, if necessary, change the symbols to the above international symbols common to all.

1.7 REFERENCES, CODIFIED METHODS AND STANDARDS

Aberkrom, P.: *Results of Experimental Work on Traction Drives.* Elevator Technology 4 (Proceedings of ELEVCON 92, Amsterdam, 1992).

Cholewa, W. and Hansel, J.: *Problem of Plastic Lining Application in Friction Drives*. Elevator Technology (Proceedings of ELEVCON 86, Nice, 1986).

de Crouy-Chanel, F.: *International Standardization in the Lift Industry*. Elevator Technology (Proceedings of ELEVCON 86, Nice, 1986).

Deimann, R.: *Experience with Rope Brakes*. Elevator Technology 4 (Proceedings of ELEVCON 92, Amsterdam, 1992).

Distaso, C.: *Polyurethane Buffers*. Elevator Technology 3 (Proceedings of ELEVCON 90, Rome, 1990).

Feyrer, K.: *Discard Criteria for Wire Ropes*. Elevator Technology II (Proceedings of ELEVCON 88, Karlsruhe, 1988).

Franzen, C.F. and Englert, Th.: *Der Aufzugbau*. F. Vieweg & Sohn, Braunschweig, 1972.

Gibson, G.W.: *New Concepts in Traction Drives*. (Proceedings of the International Lift Symposium, Amsterdam, 1984).

Gibson, G.W.: *Kinetic Energy of Passenger Elevator Door Systems*. ELEVATOR WORLD 12/1989 and 1/1990, Mobile, USA.

Hymans, F. and Hellborn, A.V.: *Der neuzeitliche Aufzug mit Treibscheibenantrieb*. Julius Springer, Berlin, 1927.

Janovský, L.: *Elevator Mechanical Design*. Ellis Horwood Ltd., Chichester, 1987.

Janovský, L.: *Stress Analysis in Guide Rails of Electric Elevators.* Technical University of Prague, dissertation, 1981.

Janovský, L.: *The Distribution of Tensile Forces in Elevator Ropes with Traction Drives and the Resultant Effect upon Wear of Sheave Grooves*. Proceedings of the International Lift Symposium, Amsterdam, 1984.

Janovský, L.: *Testing of Elevator Machines*. Elevator Technology II (Proceedings of ELEVCON 88, Karlsruhe, 1988).

Janovský, L.: *Analysis of Stress in Guide Rails*. Elevator Technology 3, Rome, 1990.

Janovský, L.: *Worldwide Standards for Guide Rail Calculations*. Elevator Technology 4 (Proceedings of ELEVCON 92, Amsterdam, 1992).

Janovský, L. and Doležal. J.: *Výtahy a eskalátory*. SNTL, Prague, 1980.

Kamaike H., Ishii, T., Watanabe, E., Matsukura, Y.: *A Ropeless Linear Drive Elevator*. ELEVATOR WORLD 3/1991, Mobile, USA.

Kampers, P.: *The Best Elevator Rope*. Elevator Technology 4 (Proceedings of ELEVCON 92, Amsterdam, 1992).

Laney, R. and McCallum, W.: *Whisperflex Compensating Cable*. Elevator Technology (Proceedings of ELEVCON 86, Nice, 1986).
Measuring Sound. Brochure of Bruel & Kjaer, Denmark, 1984.
Nederbragt, L.A.: *Rope Brake as Precaution against Overspeed*. ELEVATOR WORLD 7/1989, Mobile, USA.
Niemann, G. and Winter, H.: *Maschinenelemente III*. Springer Verlag, Berlin, 1983.
Phillips, R.S.: *Electric Lifts*. Pitman Publishing, London, 1973.
Strakosch, G.: *Vertical Transportation: Elevators and Escalators*. 2nd Edition. John Wiley & Sons, New York, 1983.
Sturgeon, W.C.: *The LIM Elevator Drive*. ELEVATOR WORLD 3/1991, Mobile, 1991.
Terminology for Lifts, Escalators and Passenger Conveyors. Federation Europeenne de la Manutention, Section VII, 1981.
The Selection and Inspection of Elevator Ropes. ELEVATOR WORLD Educational Package, Mobile, USA.
Walker, H.: *The Thermal Rating of Worm Gearboxes*. Private Communication, 1993.
Gosh, K.: OTIS Catalogue and Private Communication, London, UK, 2000/2005.
White, B.: Kone Catalogue, Private Communications Package, UK, 2002.

CODES AND STANDARDS

ANSI/AGMA 6034-A 87 Practice for Enclosed Cylindrical Wormgear, Speed Reducers and Gearmotors, March, 1988.
ANSI/ASME A 17.1-1990 Safety Code for Elevators and Escalators.
Australian Standard AS 2759-1985 Steel Wire Rope – Application Guide, 1985.
Australian Standard AS 3569-1989 Steel Wire Ropes.
BS 302:Part 1 Stranded Steel Wire Ropes. Specification for General Requirements, 1987.
BS 302:Part 4 (7) Stranded Steel Wire Ropes. Specification for Ropes and Lifts, 1987.
BS 5655:Part 1 /EN 81:Part 1 Lifts and Service Lifts. Safety Rules for the Construction and Installation of Electric Lifts,1979.
BS 5655:Part 5 Lifts and Service Lifts. Specification for Dimensions of Standard Electric Lifts Arrangements, 1981.
BS 5655:Part 9 Lifts and Service Lifts. Specification for Guide Rails, 1985.
ISO 4344. Steel Wire Ropes for Lifts. 1985.
ISO 834 Fire Resistance Tests. Elements of Building Construction, 1975.
ISO 2532 Steel Wire Ropes. Vocabulary, 1974.
IEC Publication: Clearances and Creepage Distances for Low-Voltage Conductors (within SC 28A of the IEC, at Present Appendix B of IEC Publication 158/1), 1989.

CENELEC HARMONIZATION DOCUMENTS

HD 21 S2: Polyvinyl chloride insulated cables of rated voltages up to and including 450/750 V, 1981.
HD 22 S2: Rubber insulated cables of rated voltages up to and including 450/750 V, 1981.
HD 214 S2: Recommended method for determining the comparative tracking index of solid insulating materials under moist conditions, 1980.
HD 359: Flat polyvinylchloride sheathed flexible cables, 1976.
HD 360: Rubber-insulated lift cables for normal use, 1976.
HD 384-4-41: Electrical installations of buildings.
Part 4: Protection for safety.
Chapter 41: Protection against electric shock, 1980.
HD 419: Low-voltage switchgear and control-gear contactors, 1982.
HD 420: Control switches (low-voltage switching devices for control and auxiliary circuits, including contactor relays), 1982.

2

Specifications for the design of lifts or elevators

2.1 INTRODUCTION

This chapter deals with the specifications necessary for the design of lifts or elevators. Although variations do occur from codes to codes, the specifications included here, are pretty much universal. The reader is still advised to compare the details with the specific ones adopted by a country and adjust them accordingly.

2.2 INITIAL DESIGN ESTIMATE

In offices, maximum traffic usually occurs as a morning up peak just before the start of working hours. Offices with a single tenant tend to give a higher peak than those with multi-tenants. There may be other peaks at lunch times and at the end of the day, or to the basements, garages, restaurants, conference rooms and other mass-use facilities. A simple rule of thumb for office lift service adopted by OTIS (London) is:

- 1 lift per 3 floors – good
- 1 lift per 4 floors – fair
- 1 lift per 5 floors or more – poor.

In hotels standard empirical figures can be used to calculate peaks that usually occur early in the morning and in the evening as guests arrive or use the hotel's facilities. However, patterns may differ from the figures suggested, depending on how the hotel is used. For example, for large scale events, traffic may exceed normal planning criteria and must be taken into account. Often this leads to large suites being located on lower floors. Most hotels will require separate lifts for staff, catering supplies and other goods.

The requirements for *residential houses and apartments* are very similar to those of hotels except that the acceptable service can be a highly variable quantity, which directly depends on the principal, the housing association or the local government.

Careful research is needed to plan lifts in *hospitals*, where the needs of patients, staff and visitors, catering personnel and others are to be considered.

Calculation for retail complexes does not lend itself readily to a standard approach and such projects should be analysed on their individual merits. OTIS hold substantial data for such calculations to help arrive at optimal solutions.

Tables (2.1) and (2.2) prepared by the OTIS Company show the step-by-step initial estimate for the lift design requirements. The results may not be treated as final since the data is based on rudimentary traffic analysis, in steps. A full traffic analysis should be undertaken to update the results given in these tables.

Figures (2.1)–(2.3) give the elevator/lift layout for 21W1600 kg at 1.6 m/s indicating respectively the machine room cop location, elevation and machine room reactions and pit reactions. Plates (2.1) and (2.2) give a panoramic view of OTIS lifts in operation.

In the case of lifts without car doors, the wall facing the car entrances shall possess mechanical strength such that when a force of 300 N is applied at right angles to the wall at any point

Table 2.1. Buildings and recommended lift speeds.

Step 1

Determine the basic building characteristics as shown here.

Building Characteristics

Type of building: Standard office

Tenancy: Multiple

Floors above main entrance: 8

Floor-to-floor pitch: 3.5 metres

Population above main entrance: 1120

Step 2

Select the related handling capacity factor and recommended interval value.

Type of Building	Handling capacity design factor as % above main entrance population in 5 minutes	Recommended interval in seconds
Prestige office - single tenency	17	25
Prestige office - multiple tenency	12	25
Standard office - single tenency	17	30
Standard office - multiple tenancy	**12**	**30**
Residential - public	6	50
Residential - private	5	40
Hotel ☆☆☆☆☆	12 total	30
Hotel ☆☆☆	12 total	35
Hotel ☆☆	12 total	40

Step 3

Calculate the handling capacity and limit of lift travel values.

Handling capacity

= Population above main entrance × Handling capacity design factor/100

= 1120 × 12/100 = 134.4 (135) people/5 minutes

Limit of lift travel

= Floor-to-floor pitch × Floors above main entrance = 3.5 × 8 = 28.0 metres

Step 4

Select the recommended lift speed.

Speed	Recommended limit of travel metres	
	Hydraulic Drive	Traction Drive
0.4	3.3	-
0.63	15.0	15
1.0	20.0	20
1.6	**-**	**35**
2.0	-	40
2.5	-	50
4.0	-	70+
6.0	-	100+

on either face, being evenly distributed over an area of 5 cm^2 in round or square section, they shall:

(a) resist without permanent deformation
(b) resist without elastic deformation greater than 10 mm.

Table 2.2. Lifts/elevators handling facilities.

Step 5 Select 'floors above main entrance' and the Step 4 speed to look for a solution that meets handling capacity and is less than or equal to the target interval.

Floors Above Main Entrance	Speed 1.0 m/s			Speed 1.6 m/s		
	H	I	S	H	I	S
4	54	33	1	61	29	1
	69	35	2	75	32	2
	77	39	3	83	36	3
	81	22	5	91	20	4
	103	23	6	108	36	5
	116	26	7	112	21	6
	142	27	8	125	24	7
	176	29	9	162	24	8
				197	26	9
5	50	38	1	61	32	1
	75	25	5	69	36	2
				79	39	3
				91	21	5
				103	24	6
				120	25	7
				139	28	8
				170	30	9
6				55	35	1
				73	24	5
				90	26	6
				107	28	7
				124	31	8
				137	22	12
				150	34	9
				165	24	13
				201	26	14
7				51	37	1
				71	26	5
				87	28	6
				97	31	7
				112	35	8
				126	24	12
				150	26	13
				181	28	14
8				65	27	5
				80	30	6
				93	33	7
				106	23	11
				115	26	12
				138	**28**	**13**
				166	30	14

Floors Above Main Entrance	Speed 1.6 m/s			Speed 2.0 m/s			Speed 2.5 m/s			Speed 4.0 m/s		
	H	I	S	H	I	S	H	I	S	H	I	S
9	63	29	5									
	76	32	6									
	84	22	10									
	86	35	7									
	101	24	11									
	109	28	12									
	128	30	13									
	154	33	14									
11				57	32	5	120	25	12			
				67	36	6	139	28	13			
				76	24	10	156	33	14			
				89	27	11						
				102	29	12						
				102	33	13						
				141	36	14						
14							111	27	12	116	26	12
							128	31	13	133	30	13
							142	36	14	145	21	15
										147	35	14
										166	24	16
										174	18	18
										184	28	17
										199	20	19
										220	24	20
17										105	28	12
										119	32	13
										129	22	15
										145	26	16
										160	31	17
										173	21	19
										190	25	20
19										133	23	15
										149	27	16
										164	32	17
										178	22	19
										195	27	20

H = Handling Capacity (people per 5 minutes)
I = Interval (seconds)
S = Solution No. (in Step 6)

Step 6

From the solution number determine the minimum configuration possible.

Solution No.	Cars in group	Load kg	No. of people
1	2	630	8
2	2	800	10
3	2	1000	13
4	2	1250	16
5	3	630	8
6	3	800	10
7	3	1000	13
8	3	1250	16
9	3	1600	21
10	4	630	8

Solution No.	Cars in group	Load kg	No. of people
11	4	800	10
12	4	1000	13
13	**4**	**1250**	**16**
14	4	1600	21
15	5	1000	13
16	5	1250	16
17	5	1600	21
18	6	1000	18
19	6	1250	16
20	6	1600	21

Step 7 Refer to data for lift dimensional options

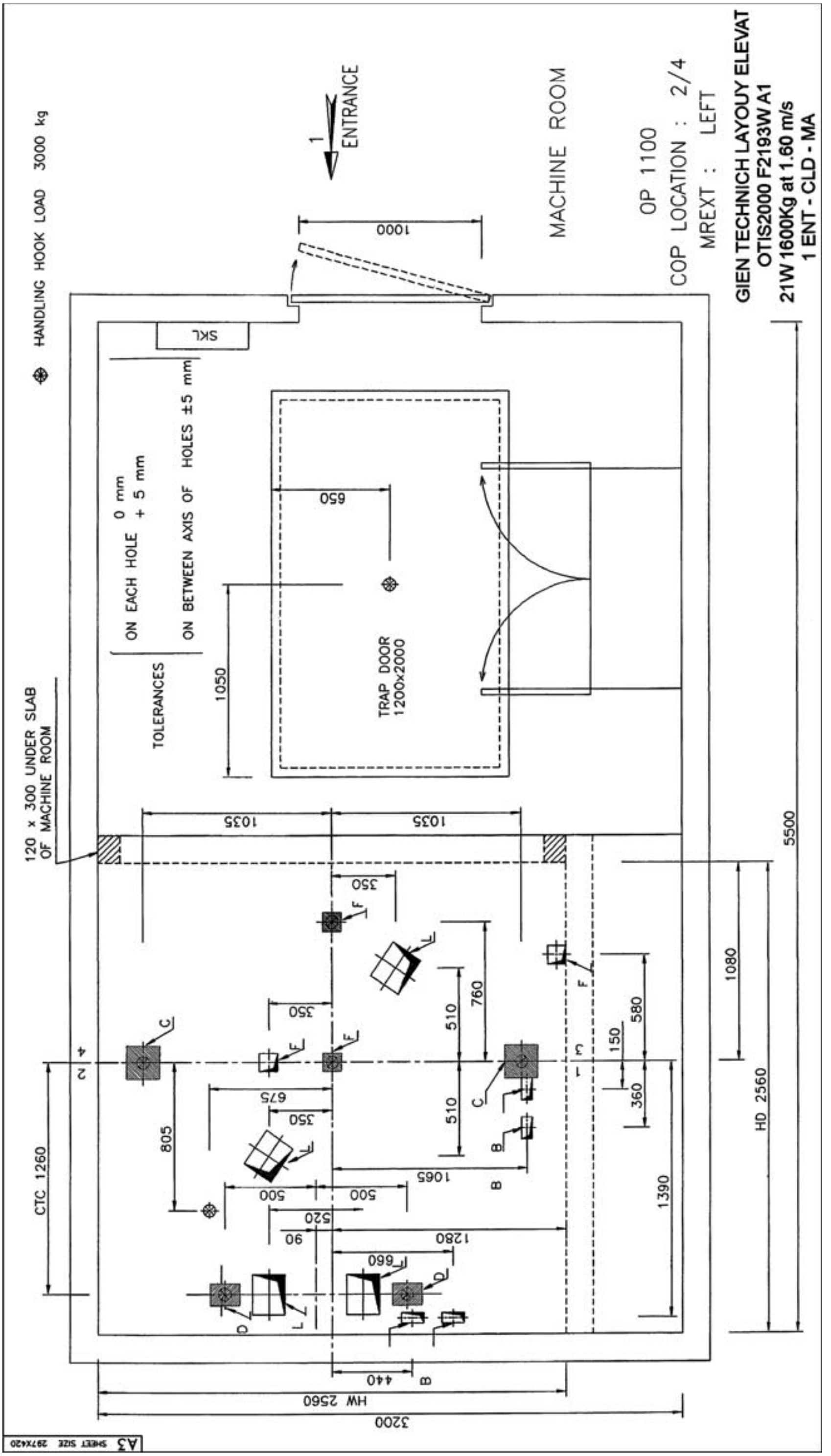

Figure 2.1. General technical layout of the Elevators-I.

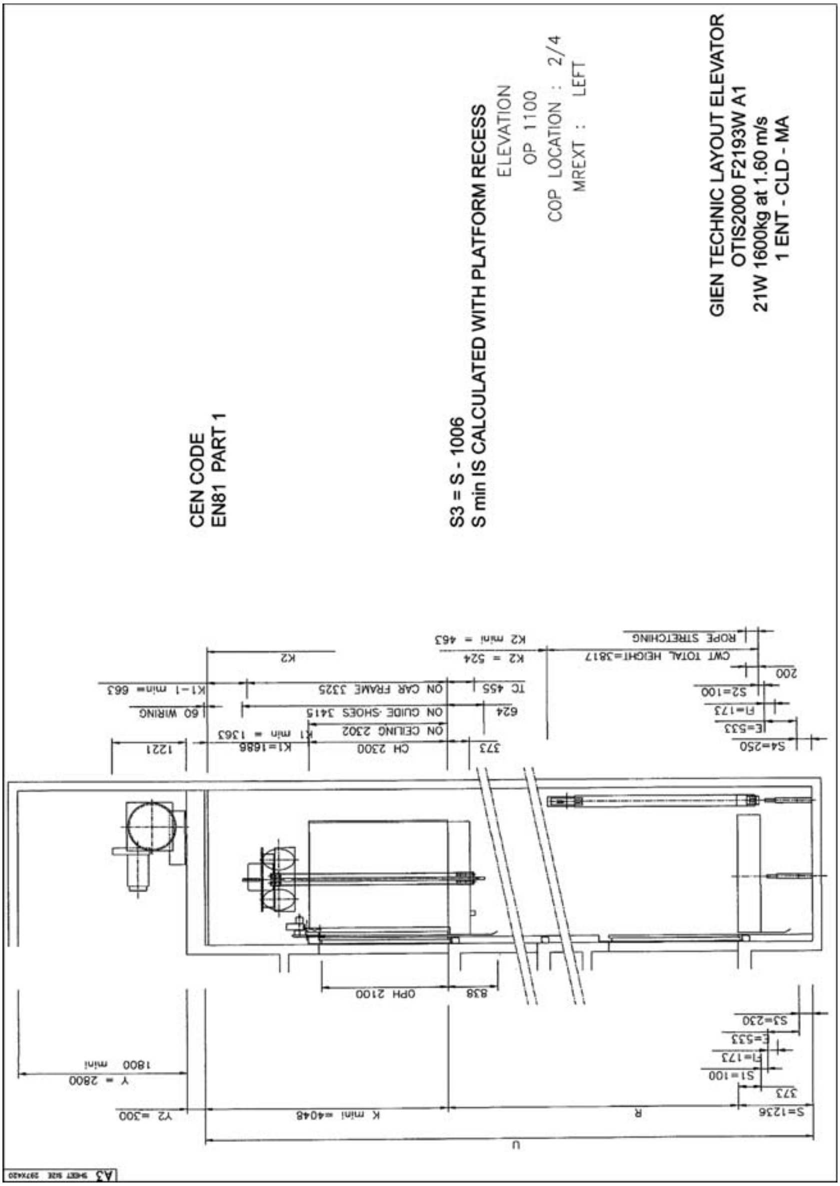

Figure 2.2. General technical layout of the Elevators-II.

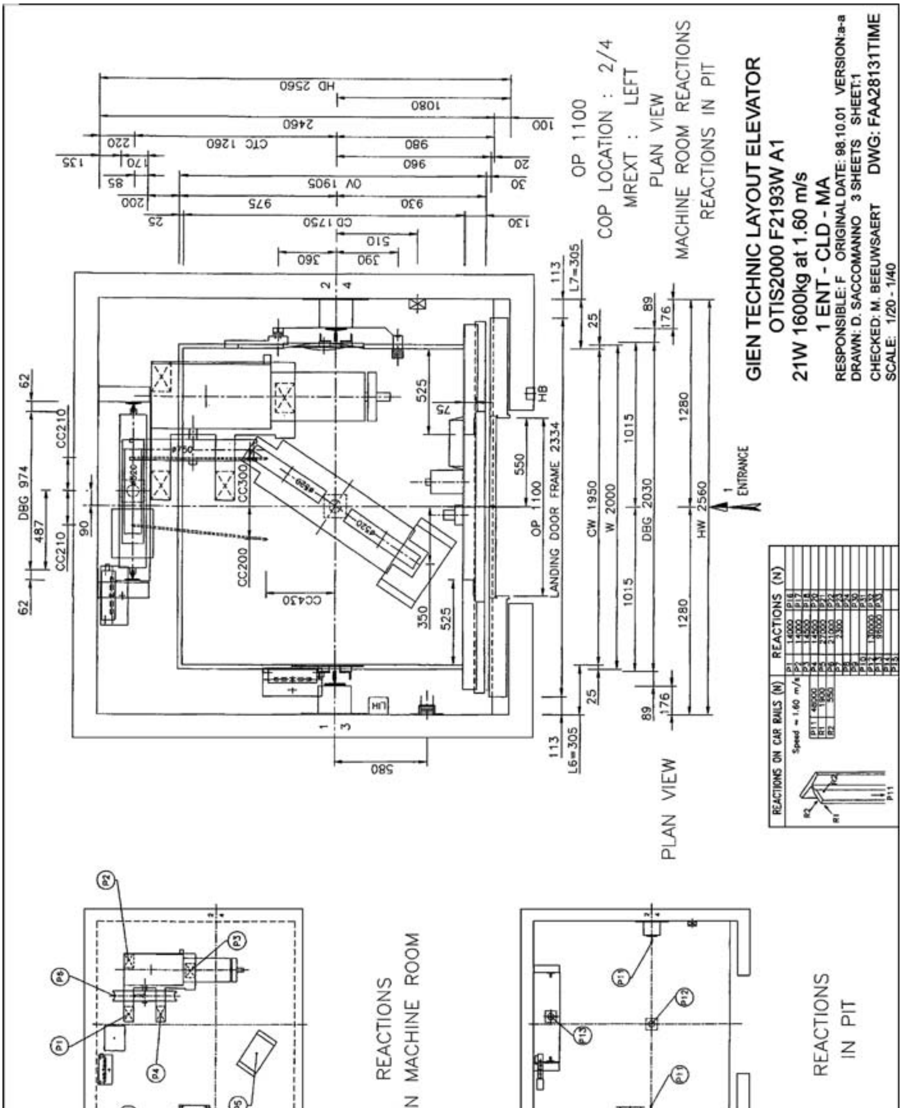

Figure 2.3. General technical layout of the Elevators-III.

Plate 2.1. Lifts/Elevators, grovenor place london (with compliments from OTIS LTD).

The assembly comprising the landing doors and any wall or part of a wall facing the car entrance, shall form an imperforate surface over the full entrance width of the car, excluding the operational clearances of doors.

Below each landing sill over a vertical distance of not less than half the unlocking zone plus 50 mm, the wall of the lift well shall comply with the requirements of any known code.

In addition, it shall be:

(a) either connected to the lintel of the next door, or
(b) extended downwards using a hard smooth chamfer whose angle to the horizontal plane shall be at least 60°. The projection of this chamfer on the horizontal plane shall be not less than 20 mm. The horizontal distance between the wall of the well and the sill or entrance frame of the car or door (or extreme edge of the doors in the case of sliding doors) shall not exceed 0.15 m.

Plate 2.2. Lifts panoramic view-1 (with compliments from OTIS company, U.K.).

The object is to prevent:

(1) a person falling down the well;

(2) a person getting into the gap between the car door and well during normal operation of the lift (it is with this in mind that the measurement of 0.15 m shall be checked, particularly in the case of interlinked telescopic doors).

A horizontal distance of 0.20 m may be permitted, over a vertical distance of 0.50 m (maximum).

(c) for lifts without a car door, the assembly shall form a continuous vertical surface composed of smooth and hard elements, such as metal sheets, hard facings or materials equivalent with regard to friction. Plaster faced and glass walls are forbidden. Additionally, this assembly shall extend at least 25 mm on both sides beyond the full car entrance width.

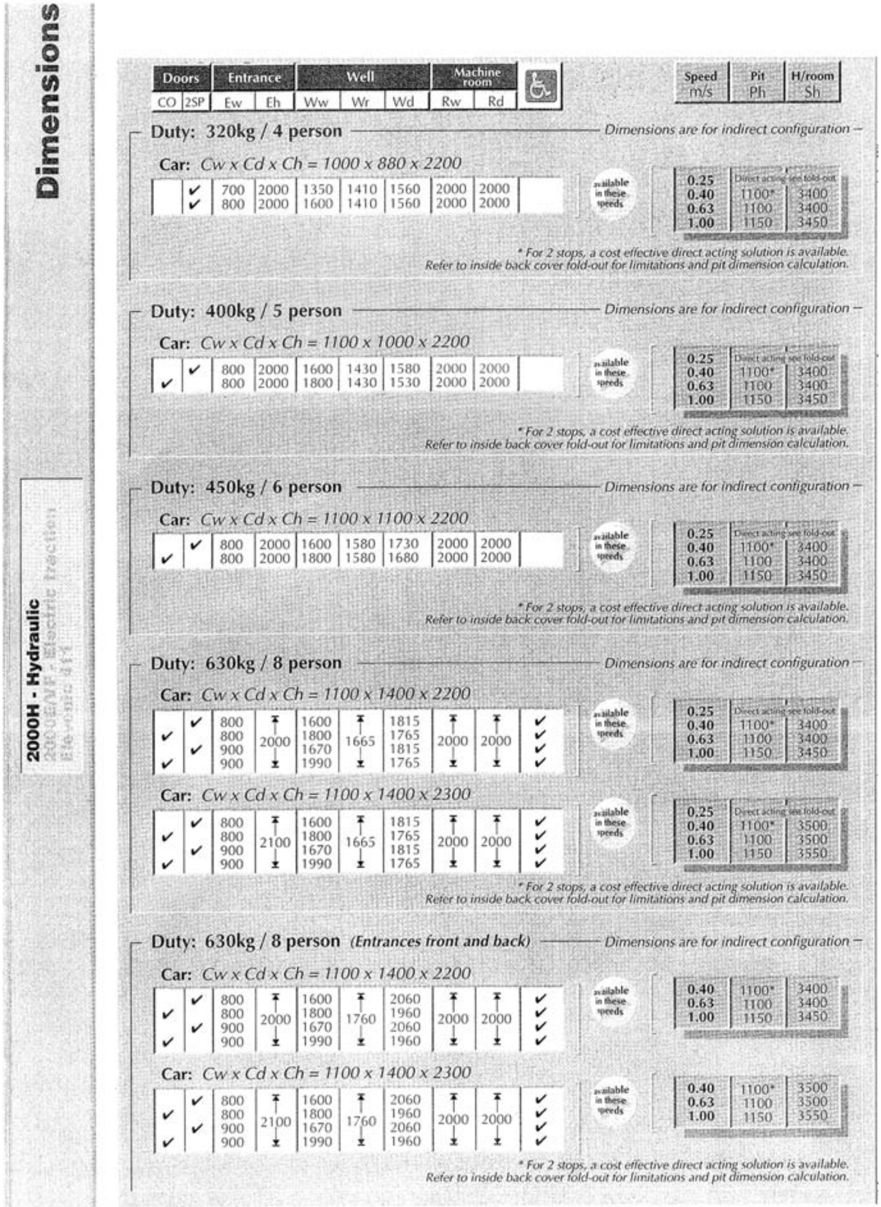
Dimensions

2000H - Hydraulic

Doors CO	Doors 2SP	Entrance Ew	Entrance Eh	Well Ww	Well Wr	Well Wd	Machine room Rw	Machine room Rd	♿

Duty: 320kg / 4 person — *Dimensions are for indirect configuration*

Car: *Cw x Cd x Ch = 1000 x 880 x 2200*

CO	2SP	Ew	Eh	Ww	Wr	Wd	Rw	Rd	♿
	✓	700	2000	1350	1410	1560	2000	2000	
	✓	800	2000	1600	1410	1560	2000	2000	

available in these speeds

Speed m/s	Pit Ph	H/room Sh
0.25	Direct acting see fold-out	
0.40	1100*	3400
0.63	1100	3400
1.00	1150	3450

** For 2 stops, a cost effective direct acting solution is available. Refer to inside back cover fold-out for limitations and pit dimension calculation.*

Duty: 400kg / 5 person — *Dimensions are for indirect configuration*

Car: *Cw x Cd x Ch = 1100 x 1000 x 2200*

CO	2SP	Ew	Eh	Ww	Wr	Wd	Rw	Rd	♿
	✓	800	2000	1600	1430	1580	2000	2000	
✓		800	2000	1800	1430	1530	2000	2000	

available in these speeds

Speed m/s	Pit Ph	H/room Sh
0.25	Direct acting see fold-out	
0.40	1100*	3400
0.63	1100	3400
1.00	1150	3450

** For 2 stops, a cost effective direct acting solution is available. Refer to inside back cover fold-out for limitations and pit dimension calculation.*

Duty: 450kg / 6 person — *Dimensions are for indirect configuration*

Car: *Cw x Cd x Ch = 1100 x 1100 x 2200*

CO	2SP	Ew	Eh	Ww	Wr	Wd	Rw	Rd	♿
	✓	800	2000	1600	1580	1730	2000	2000	
✓		800	2000	1800	1580	1680	2000	2000	

available in these speeds

Speed m/s	Pit Ph	H/room Sh
0.25	Direct acting see fold-out	
0.40	1100*	3400
0.63	1100	3400
1.00	1150	3450

** For 2 stops, a cost effective direct acting solution is available. Refer to inside back cover fold-out for limitations and pit dimension calculation.*

Duty: 630kg / 8 person — *Dimensions are for indirect configuration*

Car: *Cw x Cd x Ch = 1100 x 1400 x 2200*

CO	2SP	Ew	Eh	Ww	Wr	Wd	Rw	Rd	♿
	✓	800	2000	1600	1665	1815	2000	2000	✓
✓		800		1800		1765			✓
	✓	900		1670		1815			✓
✓		900		1990		1765			✓

available in these speeds

Speed m/s	Pit Ph	H/room Sh
0.25	Direct acting see fold-out	
0.40	1100*	3400
0.63	1100	3400
1.00	1150	3450

Car: *Cw x Cd x Ch = 1100 x 1400 x 2300*

CO	2SP	Ew	Eh	Ww	Wr	Wd	Rw	Rd	♿
	✓	800	2100	1600	1665	1815	2000	2000	✓
✓		800		1800		1765			✓
	✓	900		1670		1815			✓
✓		900		1990		1765			✓

available in these speeds

Speed m/s	Pit Ph	H/room Sh
0.25	Direct acting see fold-out	
0.40	1100*	3500
0.63	1100	3500
1.00	1150	3550

** For 2 stops, a cost effective direct acting solution is available. Refer to inside back cover fold-out for limitations and pit dimension calculation.*

Duty: 630kg / 8 person *(Entrances front and back)* — *Dimensions are for indirect configuration*

Car: *Cw x Cd x Ch = 1100 x 1400 x 2200*

CO	2SP	Ew	Eh	Ww	Wr	Wd	Rw	Rd	♿
	✓	800	2000	1600	1760	2060	2000	2000	✓
✓		800		1800		1960			✓
	✓	900		1670		2060			✓
✓		900		1990		1960			✓

available in these speeds

Speed m/s	Pit Ph	H/room Sh
0.40	1100*	3400
0.63	1100	3400
1.00	1150	3450

Car: *Cw x Cd x Ch = 1100 x 1400 x 2300*

CO	2SP	Ew	Eh	Ww	Wr	Wd	Rw	Rd	♿
	✓	800	2100	1600	1760	2060	2000	2000	✓
✓		800		1800		1960			✓
	✓	900		1670		2060			✓
✓		900		1990		1960			✓

available in these speeds

Speed m/s	Pit Ph	H/room Sh
0.40	1100*	3500
0.63	1100	3500
1.00	1150	3550

** For 2 stops, a cost effective direct acting solution is available. Refer to inside back cover fold-out for limitations and pit dimension calculation.*

Plate 2.2(a). Hydraulic lift data, OTIS 2000H-Hydraulic.

Any projections shall be less than 5 mm. Projections exceeding 2 mm shall be chamfered at least 75° to the horizontal.

When the landing doors are fitted with recessed handles, the depth of the cavity on the wall side shall not exceed 30 mm and the width 40 mm. The walls of the cavity above and below shall form an angle of at least 60°, preferably 75°, with the horizontal. The arrangement of the handles or bars shall limit the risk of catching and prevent fingers from being trapped behind them or becoming wedged.

OTIS 2000H-HYDRAULIC

Doors CO	Doors 2SP	Entrance Ew	Entrance Eh	Well Ww	Well Wr	Well Wd	Machine room Rw	Machine room Rd	♿

Speed m/s	Pit Ph	H/room Sh

Duty: 800kg / 10 person

Dimensions are for indirect configuration

Car: *Cw x Cd x Ch = 1350 x 1400 x 2200*

CO	2SP	Ew	Eh	Ww	Wr	Wd	Rw	Rd	♿
✔		800		1800		2120			✔
	✔	900	2000	1670	2020	2170	2000	2000	✔
✔		900		1990		2120			✔

available in these speeds

Speed m/s	Pit Ph	H/room Sh
0.25	Direct acting see fold-out	
0.40	1200*	3400
0.63	1200	3400
1.00	1250	3450

Car: *Cw x Cd x Ch = 1350 x 1400 x 2300*

CO	2SP	Ew	Eh	Ww	Wr	Wd	Rw	Rd	♿
✔		800		1800		2120			✔
	✔	900	2100	1670	2020	2170	2000	2000	✔
✔		900		1990		2120			✔

available in these speeds

Speed m/s	Pit Ph	H/room Sh
0.25	Direct acting see fold-out	
0.40	1200*	3500
0.63	1200	3500
1.00	1250	3550

* For 2 stops, a cost effective direct acting solution is available.
Refer to inside back cover fold-out for limitations and pit dimension calculation.

Duty: 800kg / 10 person *(Entrances front and back)*

Dimensions are for indirect configuration

Car: *Cw x Cd x Ch = 1350 x 1400 x 2200*

CO	2SP	Ew	Eh	Ww	Wr	Wd	Rw	Rd	♿
✔		800		1950		1960			✔
	✔	900	2000	1900	1760	2060	2000	2000	✔
✔		900		2045		1960			✔

available in these speeds

Speed m/s	Pit Ph	H/room Sh
0.40	1200	3400
0.63	1200	3400
1.00	1250	3450

Car: *Cw x Cd x Ch = 1350 x 1400 x 2300*

CO	2SP	Ew	Eh	Ww	Wr	Wd	Rw	Rd	♿
✔		800		1950		1960			✔
	✔	900	2100	1900	1760	2060	2000	2000	✔
✔		900		2045		1960			✔

available in these speeds

Speed m/s	Pit Ph	H/room Sh
0.40	1200	3500
0.63	1200	3500
1.00	1250	3550

Duty: 1000kg / 13 person

Dimensions are for indirect configuration

Car: *Cw x Cd x Ch = 1100 x 2100 x 2200*

CO	2SP	Ew	Eh	Ww	Wr	Wd	Rw	Rd	♿
	✔	800		1600		2515			✔
✔		800	2000	1800	2365	2465	2000	2000	✔
	✔	900		1670		2515			✔
✔		900		1990		2465			✔

available in these speeds

Speed m/s	Pit Ph	H/room Sh
0.25	Direct acting see fold-out	
0.40	1200	3400
0.63	1200	3400
1.00	1250	3450

Car: *Cw x Cd x Ch = 1100 x 2100 x 2300*

CO	2SP	Ew	Eh	Ww	Wr	Wd	Rw	Rd	♿
	✔	800	2100	1600		2515			✔
✔		800	2100	1800	2365	2465	2000	2000	✔
	✔	900	2100	1670		2515			✔
✔		900	2100	1990		2465			✔

available in these speeds

Speed m/s	Pit Ph	H/room Sh
0.25	Direct acting see fold-out	
0.40	1200	3500
0.63	1200	3500
1.00	1250	3550

Car: *Cw x Cd x Ch = 1600 x 1400 x 2300*

CO	2SP	Ew	Eh	Ww	Wr	Wd	Rw	Rd	♿
✔		900	2100	1990	2000	2100	2000	2000	✔
✔		1100	2100	2400	2000	2100	2000	2000	✔

available in these speeds

Speed m/s	Pit Ph	H/room Sh
0.25	Direct acting see fold-out	
0.40	1200*	3500
0.63	1200	3500
1.00	1250	3550

* For 2 stops, a cost effective direct acting solution is available.
Refer to inside back cover fold-out for limitations and pit dimension calculation.

Duty: 1000kg / 13 person *(Entrances front and back)*

Dimensions are for indirect configuration

Car: *Cw x Cd x Ch = 1100 x 2100 x 2200*

CO	2SP	Ew	Eh	Ww	Wr	Wd	Rw	Rd	♿
	✔	800		1600		2760			✔
✔		800	2000	1800	2460	2660	2000	2000	✔
	✔	900		1670		2760			✔
✔		900		1990		2660			✔

available in these speeds

Speed m/s	Pit Ph	H/room Sh
0.40	1200	3400
0.63	1200	3400
1.00	1250	3450

Car: *Cw x Cd x Ch = 1100 x 2100 x 2300*

CO	2SP	Ew	Eh	Ww	Wr	Wd	Rw	Rd	♿
	✔	800	2100	1600		2760			✔
✔		800	2100	1800	2460	2660	2000	2000	✔
	✔	900	2100	1670		2760			✔
✔		900	2100	1990		2660			✔

available in these speeds

Speed m/s	Pit Ph	H/room Sh
0.40	1200	3500
0.63	1200	3500
1.00	1250	3550

Plate 2.2(b). Additional hydraulic lift data.

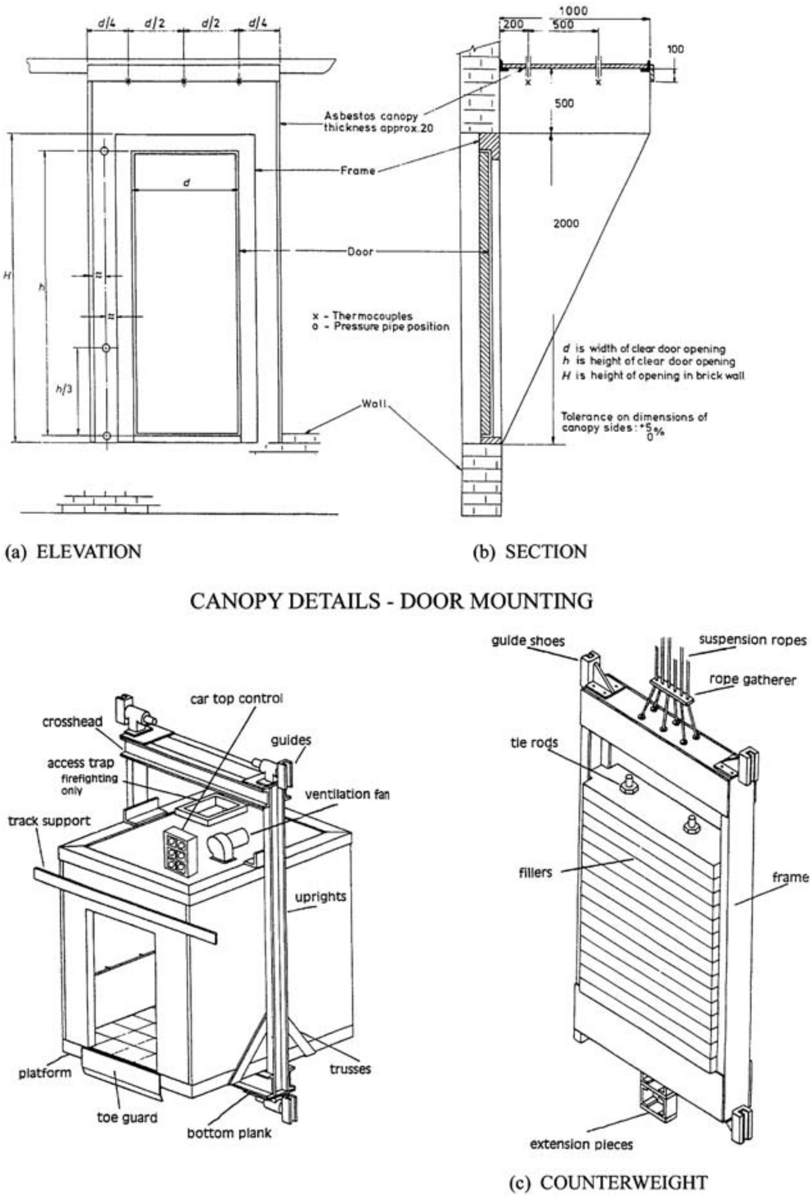

Figure 2.4. Lifts: Canopy details, car frame and counterweight details (with compliments from British Standards, London).

Case (a): Protection of any spaces located below the car or any counterweight

Lift wells should preferably not be situated above the space accessible to persons.

If accessible spaces do exist underneath the car or counterweight, the base of the pit shall be designed for an imposed load of at least 5000 N/m^2, and either there shall be installed a solid pier extending down to solid ground, below the counterweight buffer, or the counterweight shall be equipped with safety gear.

Figures (2.4) and (2.5) show the major components of the lift assembly.

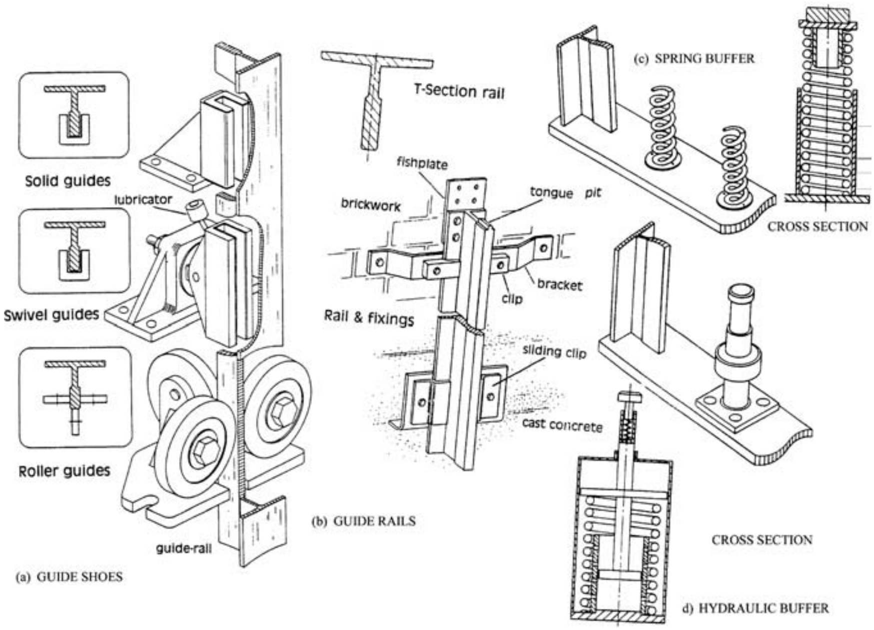

Figure 2.5. Guide shoes, guide rails, buffers for lifts (with compliments from the lift Manufacturing Association, New York.

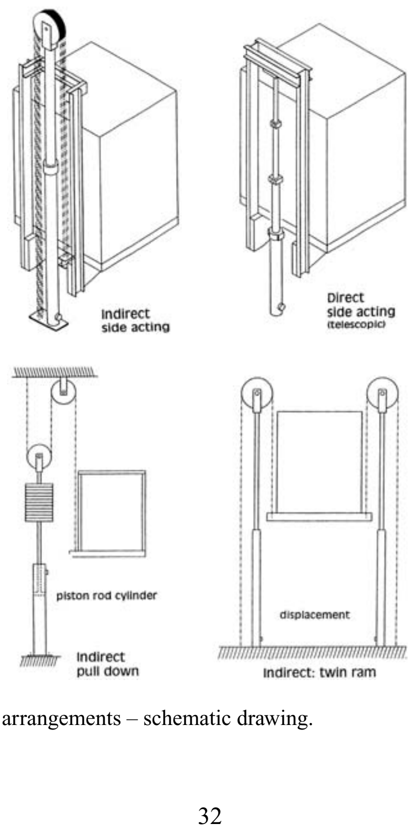

Plate 2.3. Hydraulic elevator arrangements – schematic drawing.

2.3 ELECTRIC LIFTS

2.3.1 *Introduction*

A wide range of layout configurations can be employed with panoramic and non – panoramic lifts. Safety and quality are assured by the ISO 9001 code. In case of a panoramic one, in order to afford maximum visibility and a sense of spaciousness, floor–to–floor ceiling glass panels are often favoured with a car. The glass is sealed directly into the car platform and lower ceiling and can be offset with a polished brass trim. Plate (2.3) shows the interior element skeleton of such lifts. The non – panoramic ones are enclosed, with solid doors at levels, by lift shafts which in turn are

Plate 2.3.a. Lift panoramic view.

Table 2.3. Buckling factor ω as a function of λ for steel of 370 N/mm^2 grade.

λ	0	1	2	3	4	5	6	7	8	9	λ
20	1.04	1.04	1.04	1.05	1.05	1.06	1.06	1.07	1.07	1.08	20
30	1.08	1.09	1.09	1.10	1.10	1.11	1.11	1.12	1.13	1.13	30
40	1.14	1.14	1.15	1.16	1.16	1.17	1.18	1.19	1.19	1.20	40
50	1.21	1.22	1.23	1.23	1.24	1.25	1.26	1.27	1.28	1.29	50
60	1.30	1.31	1.32	1.33	1.34	1.35	1.36	1.37	1.39	1.40	60
70	1.41	1.42	1.44	1.45	1.46	1.48	1.49	1.50	1.52	1.53	70
80	1.55	1.56	1.58	1.59	1.61	1.62	1.64	1.66	1.68	1.69	80
90	1.71	1.73	1.74	1.76	1.78	1.80	1.82	1.84	1.86	1.88	90
100	1.90	1.92	1.94	1.96	1.98	2.00	2.02	2.05	2.07	2.09	100
110	2.11	2.14	2.16	2.18	2.21	2.23	2.27	2.31	2.35	2.39	110
120	2.43	2.47	2.51	2.55	2.60	2.64	2.68	2.72	2.77	2.81	120
130	2.85	2.90	2.94	2.99	3.03	3.08	3.12	3.17	3.22	3.26	130
140	3.31	3.36	3.41	3.45	3.50	3.55	3.60	3.65	3.70	3.75	140
150	3.80	3.85	3.90	3.95	4.00	4.06	4.11	4.16	4.22	4.27	150
160	4.32	4.38	4.43	4.49	4.54	4.60	4.65	4.71	4.77	4.82	160
170	4.88	4.94	5.00	5.05	5.11	5.17	5.23	5.29	5.35	5.41	170
180	5.47	5.53	5.59	5.66	5.72	5.78	5.84	5.91	5.97	6.03	180
190	6.10	6.16	6.23	6.29	6.36	6.42	6.49	6.55	6.62	6.69	190
200	6.75	6.82	6.89	6.96	7.03	7.10	7.17	7.24	7.31	7.38	200
210	7.45	7.52	7.59	7.66	7.73	7.81	7.88	7.95	8.03	8.10	210
220	8.17	8.25	8.32	8.40	8.47	8.55	8.63	8.70	8.78	8.86	220
230	8.93	9.01	9.09	9.17	9.25	9.33	9.41	9.49	9.57	9.65	230
240	9.73	9.81	9.89	9.97	10.05	10.14	10.22	10.30	10.39	10.47	240
250	10.55										

For steel qualities with intermediary strengths, determine the value of ω by linear interpolation.

surrounded by staircases. Plate (2.3(a)) shows a typical electric traction lift installation. Tables (2.3) and (2.4) normally define various parameters for buckling. A graph is included (Fig. (2.6)) for predicting buffer strokes in 'm' against velocities of lift 'm/s'.

This section deals with permanently installed new electric lifts serving defined landing levels, having a car designed for the transportation of persons and/or goods, suspended by rope(s) or chain(s) or supported by one or more rams and moving at least partially between vertical guides or guides slightly inclined to the vertical. (For appliances where the inclination of the guides to the vertical exceeds 15°, this may usefully be taken as a basis).

They should be correctly designed, be of sound mechanical and electrical construction, be made of materials with adequate strength and of suitable quality and be free of defects.

They should be kept in good repair and working order. It will in particular be ensured that the dimensional requirements remain fulfilled despite wear.

A study should be made of the various accidents possible with lifts in the following areas:

(1) Types of possible accidents
- (a) shearing;
- (b) crushing;
- (c) falling;
- (d) impact;
- (e) trapping;
- (f) fire;
- (g) electric shock;

Table 2.4. Buckling factor ω as a function of λ for steel of 520 N/mm^2 grade.

λ	0	1	2	3	4	5	6	7	8	9	λ
20	1.06	1.06	1.07	1.07	1.08	1.08	1.09	1.09	1.10	1.11	20
30	1.11	1.12	1.12	1.13	1.14	1.15	1.15	1.16	1.17	1.18	30
40	1.19	1.19	1.20	1.21	1.22	1.23	1.24	1.25	1.26	1.27	40
50	1.28	1.30	1.31	1.32	1.33	1.35	1.36	1.37	1.39	1.40	50
60	1.41	1.43	1.44	1.46	1.48	1.49	1.51	1.53	1.54	1.56	60
70	1.58	1.60	1.62	1.64	1.66	1.68	1.70	1.72	1.74	1.77	70
80	1.79	1.81	1.83	1.86	1.88	1.91	1.93	1.95	1.98	2.01	80
90	2.05	2.10	2.14	2.19	2.24	2.29	2.33	2.38	2.43	2.48	90
100	2.53	2.58	2.64	2.69	2.74	2.79	2.85	2.90	2.95	3.01	100
110	3.06	3.12	3.18	3.23	3.29	3.35	3.41	3.47	3.53	3.59	110
120	3.65	3.71	3.77	3.83	3.89	3.96	4.02	4.09	4.15	4.22	120
130	4.28	4.35	4.41	4.48	4.55	4.62	4.69	4.75	4.82	4.89	130
140	4.96	5.04	5.11	5.18	5.25	5.33	5.40	5.47	5.55	5.62	140
150	5.70	5.78	5.85	5.93	6.01	6.09	6.16	6.24	6.32	6.40	150
160	6.48	6.57	6.65	6.73	6.81	6.90	6.98	7.06	7.15	7.23	160
170	7.32	7.41	7.49	7.58	7.67	7.76	7.85	7.94	8.03	8.12	170
180	8.21	8.30	8.39	8.48	8.58	8.67	8.76	8.86	8.95	9.05	180
190	9.14	9.24	9.34	9.44	9.53	9.63	9.73	9.83	9.93	10.03	190
200	10.13	10.23	10.34	10.44	10.54	10.65	10.75	10.85	10.96	11.06	200
210	11.17	11.28	11.38	11.49	11.60	11.71	11.82	11.93	12.04	12.15	210
220	12.26	12.37	12.48	12.60	12.71	12.82	12.94	13.05	13.17	13.28	220
230	13.40	13.52	13.63	13.75	13.87	13.99	14.11	14.23	14.35	14.47	230
240	14.59	14.71	14.83	14.96	15.08	15.20	15.33	15.45	15.58	15.71	240
250	15.83										

For steel qualities with intermediary strengths, determine the value of ω by linear interpolation.

  - (h) damage to material;
  - (i) due to wear;
  - (j) due to corrosion.
- (2) Persons to be safeguarded
  - (a) users;
  - (b) servicing and inspection personnel;
  - (c) persons outside the lift well, the machine room and pulley room (if any).
- (3) Objects to be safeguarded
  - (a) loads in car;
  - (b) components of the lift or service lift installation;
  - (c) the building in which the lift or service lift is installed.

2.3.2 *Lift wells, car frames and counterweights*

The lift wells generally provide spaces for one or more lift cars and other counterweight of a lift is located in the same well as the car. These wells are of imperforate nature and so are their floors and ceilings. The only permissible openings are:

- (a) openings for landing doors;
- (b) openings for inspection and emergency doors;
- (c) vent openings for escape of gases and smoke in the event of fire;
- (d) ventilation openings;
- (e) permanent openings between the well and the machine or Pulley rooms.

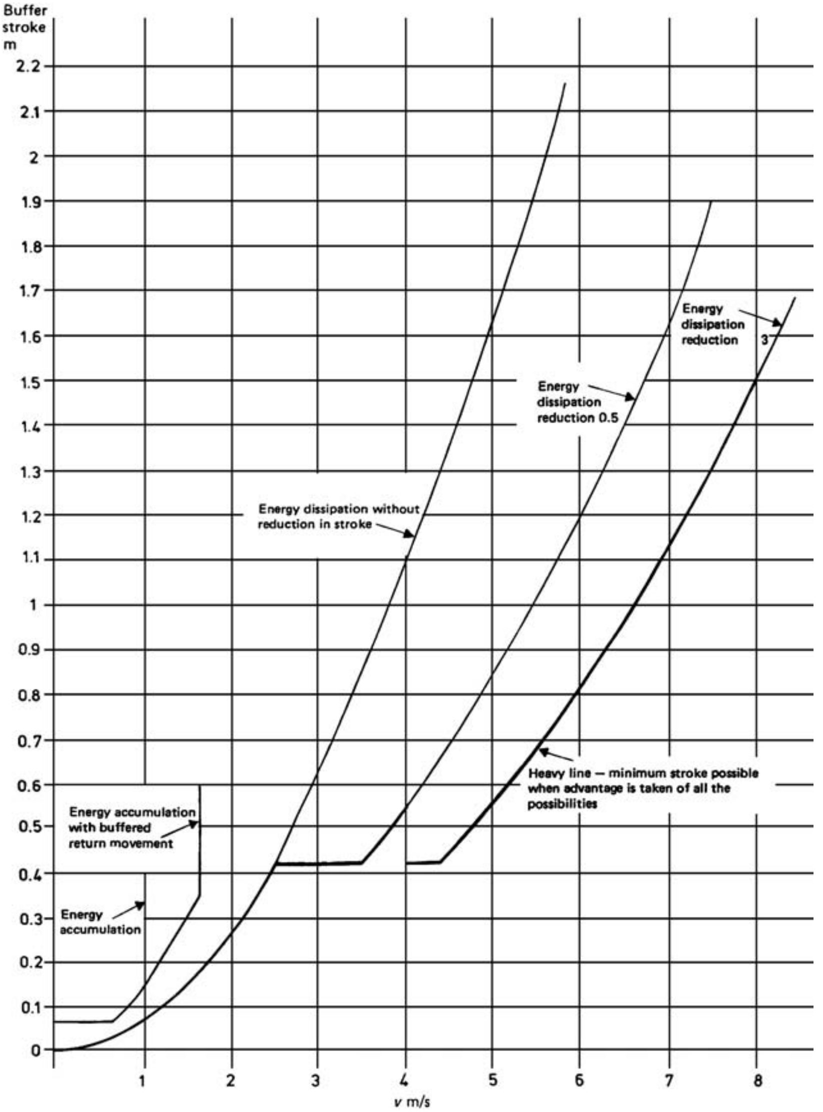

Figure 2.6.a. Graph illustrating the strokes required for buffers (with compliments from BSI, London).

2.3.2.1 *Specifications*

Specific case. When the well is not required to contribute to the protection of the building against the spread of fire the following conditions must be applied:

(a) to limit the height of the walls on faces other than the entrance faces, to a height of 2.5 m above any points normally accessible to persons;
(b) at the entrance faces of the well to use mesh or perforated panels upwards from a height of 2.5 m above landing level. These means of protection are not required if the car door is locked mechanically. The dimensions of the mesh or perforations shall not exceed 75 mm measured either horizontally or vertically;
(c) inspection and emergency doors, and inspection traps to the well, shall not be permitted except on grounds of safety to users or the requirements of servicing;

(d) inspection doors shall have a minimum height of 1.4 m and a minimum width of 0.60 m;
(e) emergency doors shall have a minimum height of 1.8 m and a minimum width of 0.35 m;
(f) inspection traps shall have a maximum height of 0.5 m and a maximum width of 0.50 m;
(g) when the distance between consecutive landing doorsills exceeds 11 m, intermediate emergency doors shall be provided, such that the distance between sills is not more than 11 m. This requirement is not called for in the case of adjacent cars, each fitted with an emergency door meeting the requirements;
(h) inspection and emergency doors and inspection traps shall not open towards the interior of the well;
(i) the doors and traps shall be provided with a key–operated lock, capable of being reclosed and relocked without a key;
(j) inspection and emergency doors shall be capable of being opened from inside the well without a key even when locked;
(k) the well shall be able to support at least the loads which may be applied by the machine, by the guides at the moment of safety gear operation, or in the case of off – centering of the load in the car, by the action of the buffers, or those which may be applied by the anti-rebound device;
(l) *the well containing cars and counterweights belonging to several lifts or service lifts.*
  - In the lower part of the well there shall be a partition between the moving parts (car or counterweight) of different lifts or service lifts.
  - This partition shall extend at least from the lower point of travel of car or counterweight to a height of 2.5 m above the floor of the pit.
  - If the horizontal distance between the edge of the car roof and a moving part (car or counterweight) of an adjacent lift or service lift is less than 0.3 m, the partition called for shall be extended through the full height of the well and over the effective width.
  - This width shall be at least equal to that of the moving part (or part of this) which is to be guarded, plus 0.1 m on each side.

2.3.2.2 *Guides, buffers and final limit switches*

(a) *General provisions concerning guides*
  - The strength of the guides, their attachments and joints shall be sufficient to withstand the forces imposed due to the operation of the safety gear and deflections due to uneven loading of the car. These deflections shall be limited to values that will not affect the normal operation of the lift.
  - The fixing of the guides to their brackets and to the building shall permit compensation, either automatically or by simple adjustment, of effects due to normal settling of the building or shrinkage of concrete.
  - A rotation of the attachments by which the guide could be released shall be prevented.

(b) *Guiding of the car and counterweight*
  - The car and counterweight shall each be guided by at least two rigid steel guides.
  - For rated speeds exceeding 0.4 m/s, the guides shall be made from drawn steel, or the rubbing surfaces shall be machined.
  - The requirements shall apply whatever the speed, when progressive safety gear is used.
  - Figure (2.4) shows the general arrangement drawings for Guide shoes, buffers and Guide rails respectively.
  - Buffers shall be placed at the bottom limit of travel for cars and counterweights.
  - If the buffers travel with the car or counterweight they shall strike against a pedestal at least 0.5 m high at the end of the travel.
  - This pedestal is not required for the counterweight buffers if, in the pit, it is impossible to gain involuntary access under the counterweight (for example: by providing screens whose mesh conforms to specific case (b)).

- In addition to the requirements of positive drive lifts shall be provided with buffers on the car top to function at the upper limit of travel.
- If the lifts are provided with counterweights, these upper buffers shall not function until the counterweight buffers are fully compressed.
- Energy accumulation type buffers may only be used if the rated speed of the lift does not exceed 1 m/s.
- Energy accumulation type buffers with buffered return movement may only be used if the rated speed of the lift does not exceed 1.6 m/s.
- Energy dissipation type buffers may be used whatever the rated speed of the lift.
- The total possible stroke of the buffers shall be at least equal to twice the gravity stopping distance corresponding to 115% of the rated speed ($0.0674v^2 \times 2 \approx 0.135v^2$), the stroke being expressed in meters and v (rated speed) in meters per second.
- However, the stroke shall not be less than 65 mm.
- Buffers shall be designed to cover the stroke defined above under a static load of between 2.5 and 4 times the sum of the mass of the car and its rated load (or the mass of the counterweight).

Energy accumulation type buffers with buffered return movement
The requirements only apply to this type of buffer.

Energy dissipation type buffers
The total possible stroke of the buffers shall be at least equal to the gravity stopping distance corresponding to 115% of the rated speed ($0.067v^2$), the stroke being expressed in meters and v (rated speed) in meters per second.

When the retardation of the lift occurs at the end of the travel, it should be monitored when the car (or counter weight) comes into contact with the buffers. This speed rather than the rated speed should be used to calculate the buffer travel. However, the stroke shall not be less than:
(1) 50% of the stroke calculated according to the rated speed does not exceed 4.00 m/s;
(2) 33 1/3% of the stroke calculated according to the requirements if the rated speed exceeds 4.00 m/s;
In any event, the stroke shall not be less than 0.42 m.

With the rated load in the car, in the case of free fall, the average retardation during action of the buffers shall not exceed g_n. Retardation more than 2.5 g_n shall not be longer than 0.04 s. The speed of impact on the buffers to be considered is equal to that for which the stroke of the buffer is calculated.

The operation of the lift shall depend on the return of the buffers to their normal extended position after operation. The device for checking this shall be an electric safety device in conformity with the requirements.

(c) *Buckling stresses in the guides*
The buckling stress σ_k in the guides during safety gear operation may be evaluated approximately by means of the following formulae:

$$\text{instantaneous safety gear: } \sigma_k = \frac{25(P+Q)\omega}{A}(\mathrm{N/mm^2}) \text{ (except captive roller type)} \tag{2.1}$$

$$\text{captive roller type safety gear: } \sigma_k = \frac{15(P+Q)\omega}{A}(\mathrm{N/mm^2}) \tag{2.2}$$

$$\text{progressive safety gear: } \sigma_k = \frac{10(P+Q)\omega}{A}(\mathrm{N/mm^2}) \tag{2.3}$$

σ_k shall not exceed:
140 N/mm^2 for steel of 370 N/mm^2 grade;
210 N/mm^2 for steel of 520 N/mm^2 grade;
(interpolate for intermediary values).

P = sum of the mass of the empty car and the masses of the portion of the travelling cables and any compensation devices, suspended from the car (kg);
Q = rated load (kg);
A = cross-sectional area of the guide (mm^2);
σ_k = buckling stress in the guides (N/mm^2);
ϖ = buckling factor read in the tables as a function of λ (see Tables (2.2) and (2.3));
$\lambda = \frac{lk}{i}$ = coefficient of slenderness;
l_k = maximum distance between guide brackets (mm);
i = radius of gyration (mm).

NOTE. Strokes required for the buffers
Figure (2.6) is a graph illustrating these strokes.
Alternatively the buckling stress σ_k in the guides during the operation of the safety gear (or clamping device) or the pawl device, if these devices act on the guides, may be evaluated approximately by means of the following formula:

$$\sigma_k = \frac{F_7.\omega}{A} \tag{2.4}$$

σ_k shall not exceed:
140 N/mm^2 for steel 370 N/mm^2 grade;
210 N/mm^2 for steel 520 N/mm^2 grade;
(interpolate for intermediary values).

Symbols
A = cross-sectional area of the guide (mm^2);
F_7 = the higher value of both forces F_1 and F_2 (N).
Two types of buffers, namely, Spring buffer and Hydraulic buffer are shown in Figure (2.5).

2.3.2.3 *Forces during safety gear operation*

The force (N) in each guide developed during safety gear operation may be evaluated approximately according to the following formula:

(a) instantaneous safety gear
  (1) except captive roller type $25(P+Q)$ (2.5)
  (2) captive roller type $15(P+Q)$ (2.6)
(b) progressive safety gear $10(P+Q)$ (2.7)

where

P = sum of the mass of the empty car and the masses of the portion of the travelling cables and any compensation devices, suspended from the car (kg);
Q = rated load (kg).

The total vertical force developed in guide rails or other parts during operation of safety gear or clamping device may be evaluated approximately according to the following formula:

(a) instantaneous safety gears and clamping devices
  (1) except captive roller type $F_{10} = 50(P_1 + Q_1)$ (2.8)
  (2) captive roller type $F_{10} = 30(P_1 + Q_1)$ (2.9)
(b) progressive safety gears and clamping devices

$$F_{10} = 20(P_1 + Q_1) \tag{2.10}$$

The vertical force in each guide rail or other part is given by the following formula:

$$F_1 = \frac{F_{10}}{\textit{number of guide rails or other parts}} \tag{2.11}$$

(a) beneath each guide rail
$F_3 = 10$ times the mass of the guide (kg), plus reaction F_1 or F_2 (N) at the moment of operation of the safety gear, clamping device or pawl device, taking the greater value as appropriate.
If the guide rails are suspended, the reactions at the points of attachment shall be evaluated by analogy to what is done in the case of guides supported at the bottom of the pit.
(b) beneath the car buffer supports

$$F_4 = 40(P_2 + Q_1) \tag{2.12}$$

(c) beneath each jack
These reactions shall be evaluated as appropriate to the arrangement of this equipment in the well and to the forces imposed on it.
(d) pawl devices provided with energy accumulation type spring buffers, with or without buffered return movement.

$$F_{20} = 30(P_1 + Q_1) \tag{2.13}$$

(e) pawl devices provided with energy dissipation type buffers.

$$F_{20} = 20(P_1 + Q_1) \tag{2.14}$$

The vertical force imposed on each fixed stop is given by the following formula:

$$F_2 = \frac{F_{20}}{\textit{number of fixed stops per stopping level}} \tag{2.15}$$

2.3.3 *Headroom, pit and landing depth*

When the counterweight rests on its fully compressed buffer(s), the following four conditions shall be satisfied at the same time:

(a) The car guide lengths shall be such as would accommodate a further guided travel, expressed in m, of at least $0.1 + 0.035v^2$.
(b) The free vertical distance between the level of the highest area on the car roof whose dimensions comply with code requirements and the level of the lowest part of the roof of the car, expressed in m, shall be at least $1.0 + 0.035v^2$.
(c) The free distance, expressed in m, between the lowest parts of the roof of the well and:
  (1) The highest pieces of equipment fixed on the roof of the car enclosure, except for those covered in (2) below, shall be at least $0.3 + 0.035v^2$.
  (2) The highest part of the guide shoes or rollers, of the rope attachments and of the header or parts of vertically sliding doors, if any, shall be at least $0.1 + 0.035v^2$.
(d) There shall be above the car sufficient space to accommodate a rectangular block not less than $0.5\,\text{m} \times 0.6\,\text{m} \times 0.8\,\text{m}$ resting on one of its faces. For lifts with direct roping, the suspension ropes and their attachments may be included in this space, provided that no rope centre-line shall be at a distance exceeding 0.15 m from at least one vertical surface of the block.
When the car rests on its totally compressed buffers, the counterweight guide lengths shall be such as would accommodate a further guided travel expressed in m, of at least $0.1 + 0.035v^2$.

When the retardation of the lift is positively monitored, the value of 0.035 for calculation clearances may be reduced:

(a) to 1/2 for lifts whose rated speed does not exceed 4 m/s;
(b) to 1/3 for lifts whose rated exceeds 4 m/s.

However, this value may not in either event be less than 0.25 m.

The lower part of the well shall consist of a pit, the bottom of which shall be smooth and approximately level, except for any buffer and guide bases and water drainage devices.

After the building-in of fixings, buffers, any grids, etc., the pit shall be impervious to infiltration of water.

If there is an access door to the pit, other than the landing door, it shall comply with the requirements of the code. Such a door shall be provided if the pit depth exceeds 2.5 m and if the layout of the building so permits.

If there is no other access a permanent means shall be provided inside the well, easily accessible from the landing door, to permit competent persons to descend safely to the floor of the pit. This shall not project into the clear running space of the lift equipment.

The reactions (N) may be evaluated as follows:

– *beneath each guide*:
  10 times the mass of the guide (kg) plus the reaction (N) at the moment of operation of the safety gear (if the guides are suspended, the reaction at the points of attachment shall be evaluated by analogy with what is done in the case of guides supported at the bottom of the pit).
– *beneath the car buffer supports*:

$$40(P + Q) \tag{2.16}$$

– *beneath the counterweight buffer supports:*
  40 times the mass (kg) of the counterweight.

Figure (2.7) shows a typical design of the pit without reinforcement. Table (2.5) indicates the landing depth for various case studies and minimum machine room dimensions other than the residential ones.

2.3.4 *Machine and pulley rooms*

General provisions

Machines, their associated equipment and pulleys shall be accessible only to authorized persons (maintenance, inspection and rescue).

The machine and its associated equipment shall be in a special room, comprising solid walls, ceiling and door and/or trap.

Diverted pulleys may be installed in the head-room of the well provided that they are located outside the projection of the car roof and that examinations and tests and maintenance operations can be carried out in complete safety from the car roof or from outside the well.

However, a diverter pulley, with single or double wrap, may be installed above the car roof for diverting towards the counterweight, provided that its shaft can be reached in complete safety from the car roof.

The traction sheave may be installed in the well, provided that:

(a) the examinations and tests and the maintenance operations may be carried out from the machine room;
(b) the openings between the machine room and the well are as small as possible.

The over-speed governor may be installed in the well, provided that the examinations and tests and the maintenance operations may be carried out from outside the well.

The divertor pulleys and the traction sheaves in the well shall be provided with devices to avoid:

(a) bodily injury;
(b) the suspension ropes or chains leaving their grooves if slack;
(c) the introduction of foreign objects between ropes and grooves.

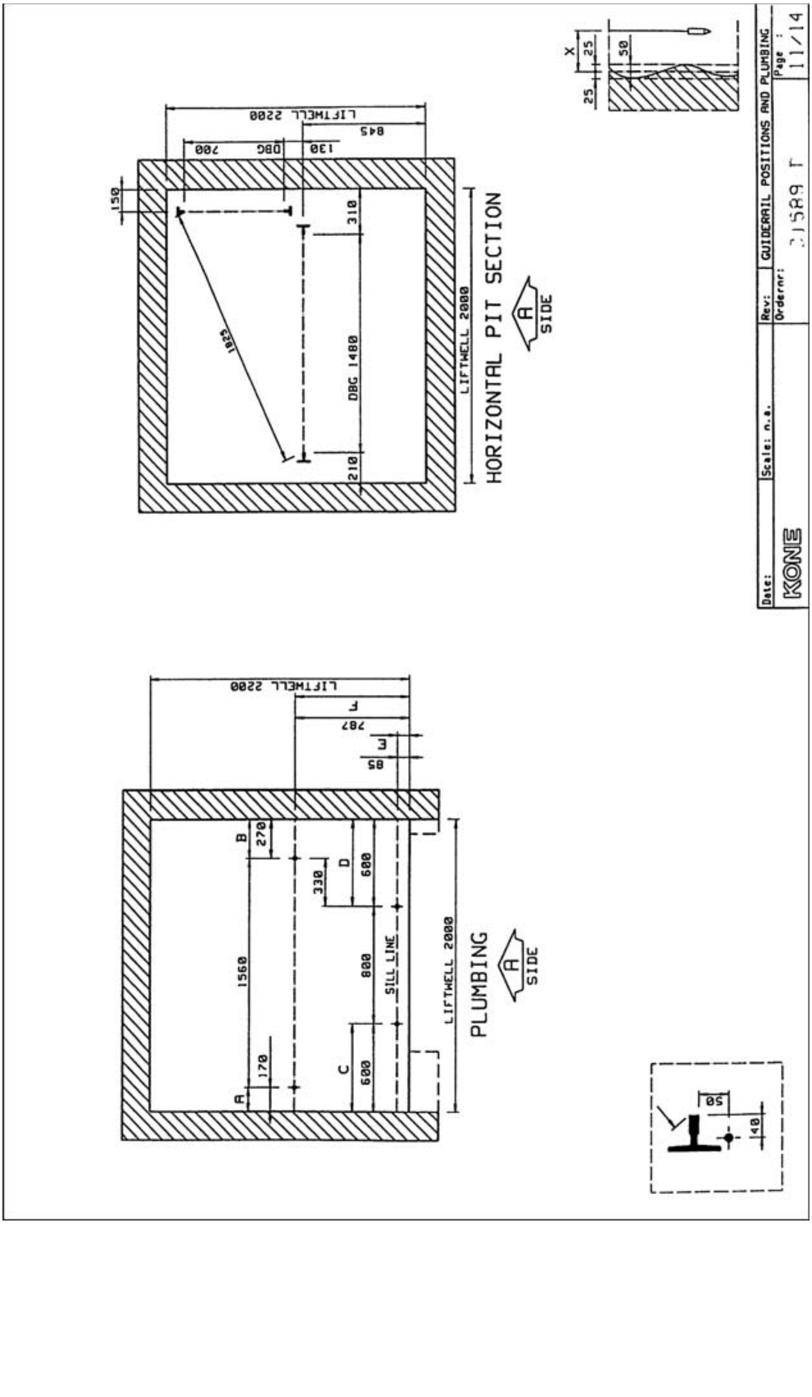

Figure 2.7(a). Gutter rail, positioning and plumbing (with compliments from KONE, U.K.).

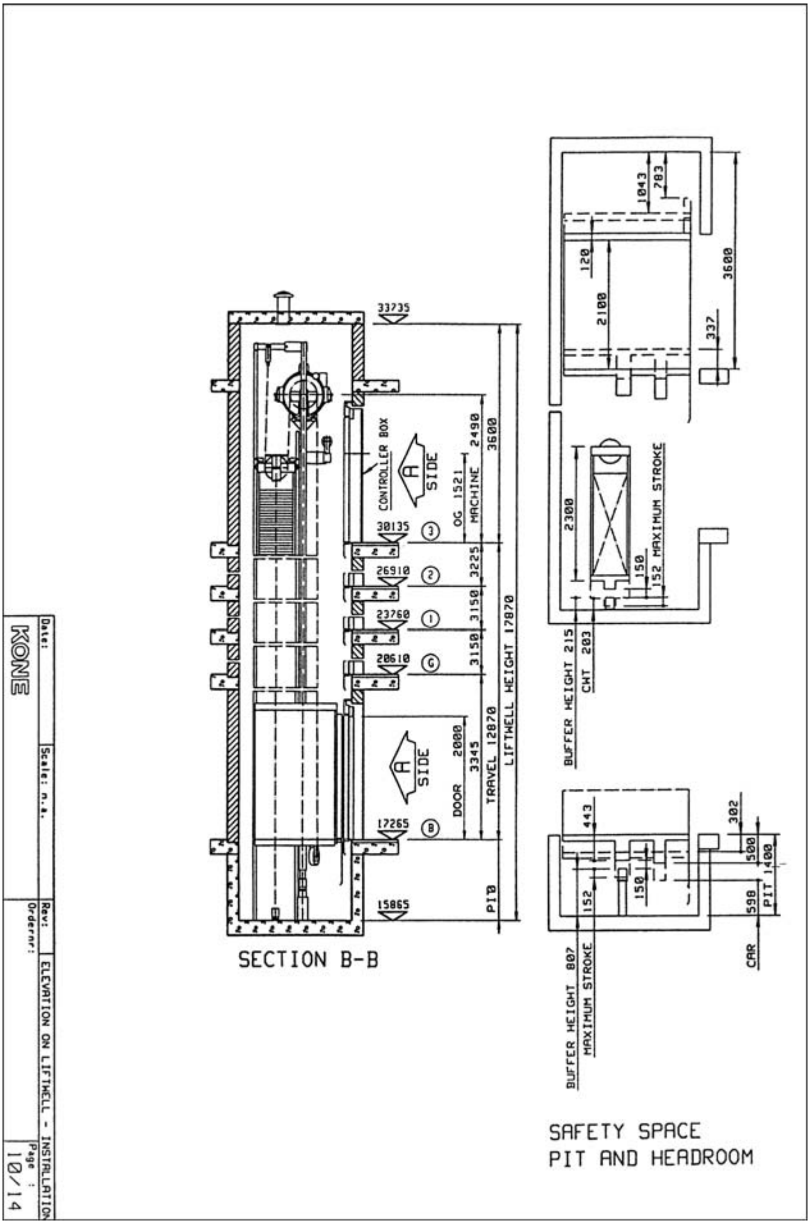

Figure 2.7(b). Safety space, pit and head room (with compliments from KONE, U.K.).

The following data shall be considered:

(d) Depth from the external surface of the enclosure = 0.7 m at least, Width = 0.5 m;
(e) Clear area = 0.5 m × 0.6 m for servicing and inspection;
(f) Clear height for the movement χq1.80 m;
(g) Clear vertical distance = 0.3 m above the rotating parts;
(h) Recesses Depth > 0.5 m;
Width > 0.5 m.

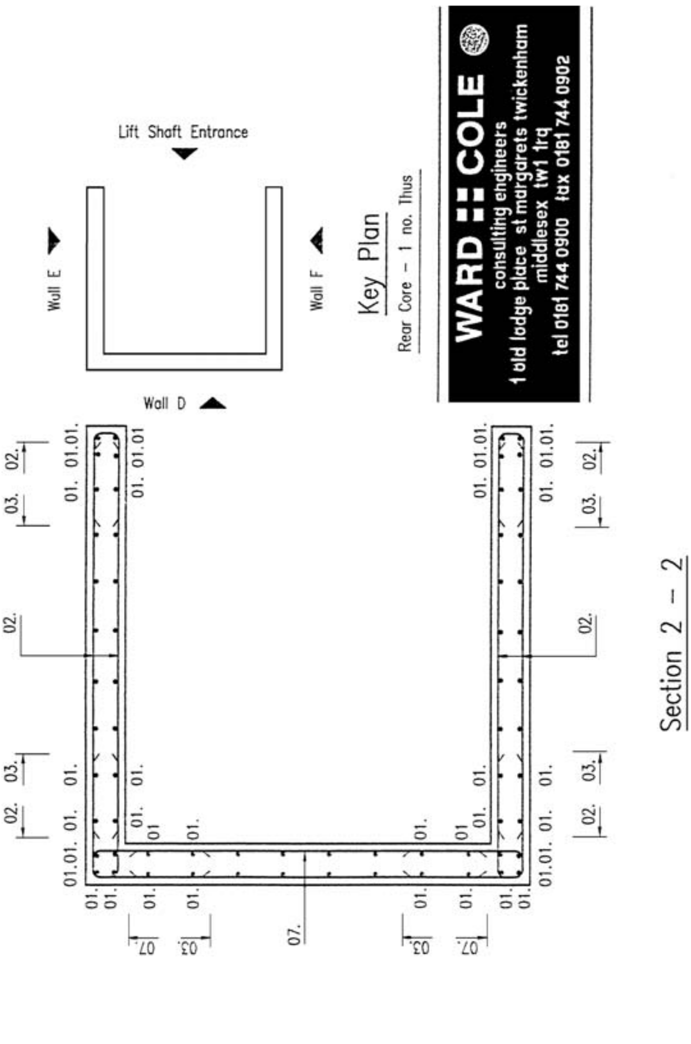

Figure 2.7(c). R.C. Details of lift shaft walls.

Table 2.5. Landing depth and machine room dimensions.

	Installation	Landing depth
Type of lift	Individual	≥dimension C_d
Residential	Multiple, side by side	either ≥1500 mm*, or ≥the greatest dimension C_d of the group, whichever is the greater
	Multiple, face to face	either ≥2100 mm, or ≥the sum of the greatest dimension C_d of the facing lifts, whichever is the greater
	Individual	≥1.5 × dimension C_d
Non-residential, excluding bed/passenger	Multiple, side by side	either ≥2400 mm, or ≥1.5 × the greatest C_d of the group, whichever is the greater
	Multiple, face to face	≥the sum of the greatest dimension C_d of the facing lifts and not greater than 4500 mm
	Individual	≥1.5 × dimension C_d
Bed/passenger	Multiple, side by side	≥1.5 × the greatest dimension C_d of the group
	Multiple, face to face	≥the sum of the greatest dimension C_d of the facing lifts

*As recommended in BS 5810.

Minimum dimension of common machine room for multiple electric traction lifts, other than residential and occasional passenger traffic

	Arrangement			
Dimension	Side by side*		Face to face*	
Floor area	$R_a + 0.9R_a(N\text{-}1)$	(a)	$R_a + 0.9R_a(N\text{-}1)$	(b)
Width	$R_w + (N\text{-}1)(W_w + 200)$	(c)	$R_w + \dfrac{(N-1)(Ww+200)}{2}$	(d)
Depth	R_d		$2W_d$ + distance between wells	

*N is the total number of lifts. In the case of an odd number of facing lifts, N is rounded up to the next even number.

2.3.5 *Landing doors*

2.3.5.1 *Introduction*

The openings in the well giving access to the lift car shall be provided with imperforate landing doors.

When closed, the clearance between panels, or between panels and uprights, lintels or sills, shall be as small as possible. In any case the clearances should not exceed 6 mm. To avoid risks and risk of shearing, the exterior face of the door shall not have recesses or projections exceeding 3 mm.

The doors shall have the resistance against deformation.

Doors and their frames shall be constructed in such a way that they will not become deformed in the course of time. To this end, it is recommended that they are made of metal.

2.3.5.2 *Structural and mechanical strength*
Various codes do differ. A force of 300 N generally is to be applied at right angles to the panels at any point on either side as an agreed figure. The load as equally distributed on an area of 5 cm^2. They shall:

(a) resist without permanent deformation;
(b) resist without elastic deformation greater than 15 mm;
(c) operate satisfactorily after such a test.

Under the application of the force defined above in the case of lifts without car doors, the elastic deformation of the landing door towards the well interior shall not exceed 5 mm.

Under the application at the most unfavourable point of a manual force (without a tool) of 150 N in the direction of opening of horizontal sliding doors, the clearances may exceed 6 mm, but they shall not exceed 30 mm.

Height
Landing doors shall have a minimum clear height of 2 m.

Width
The clear entrance of the landing doors shall not extend more than 0.05 m in width beyond the clear car entrance on either side unless appropriate precautions are taken.

The suspension elements shall have a safety factor of 8. The diameter of the suspension rope pulleys shall have at least 25 × rope diameter. The clear space above the pulleys shall be at least 0.3 m. The height of the roofs shall be above the minimum height of 1.8 m of the door minimum width 0.6 m. The access door shall have a minimum height of 1.4 m.

The *trap doors* (access ones) shall have a clear passage of at least 0.8 m × 0.8 m.

All *trap doors* shall be able to resist vertical force of 2000 N at any position without permanent deformation.

Every *landing entrance* shall be given a slight counter slope to avoid water from washing.

In case of *horizontally sliding doors*, the effort to prevent the door closing shall not exceed 150 N.

A typical door assembly arrangement is shown earlier in Figure (2.4).

2.3.6 *Compensating ropes*

Compensating ropes with tensioning pulleys shall be used if the rated speed of the lift exceeds 2.5 m/s, and the following conditions shall apply:

(a) the tension shall be provided by gravity;
(b) the tension shall be checked by an electric safety device in conformity with the requirements;
(c) the ratio between the pitch diameter of the pulleys and the nominal diameter of the compensating ropes shall be at least 30.

When the rated speed exceeds 3.5 m/s an anti-rebound should be provided. The operation of the anti-rebound device shall initiate the stopping of the lift machine by means of an electric safety device.

Protection of sprockets and pulleys used for diversion, reeving and compensation
Devices shall be provided to avoid:

(a) bodily injury;
(b) the rope leaving their grooves, or the chains leaving their sprockets, if slack;
(c) the introduction of objects between ropes (or chains) and grooves (or sprockets).

The devices used shall be so constructed that they do not hinder inspection or maintenance of the pulleys or sprockets.

Figure (2.8) shows choices of the suspension ropes.

Figure (2.9) gives sheaves and grooves, the functions of which are described earlier, and systems of roping.

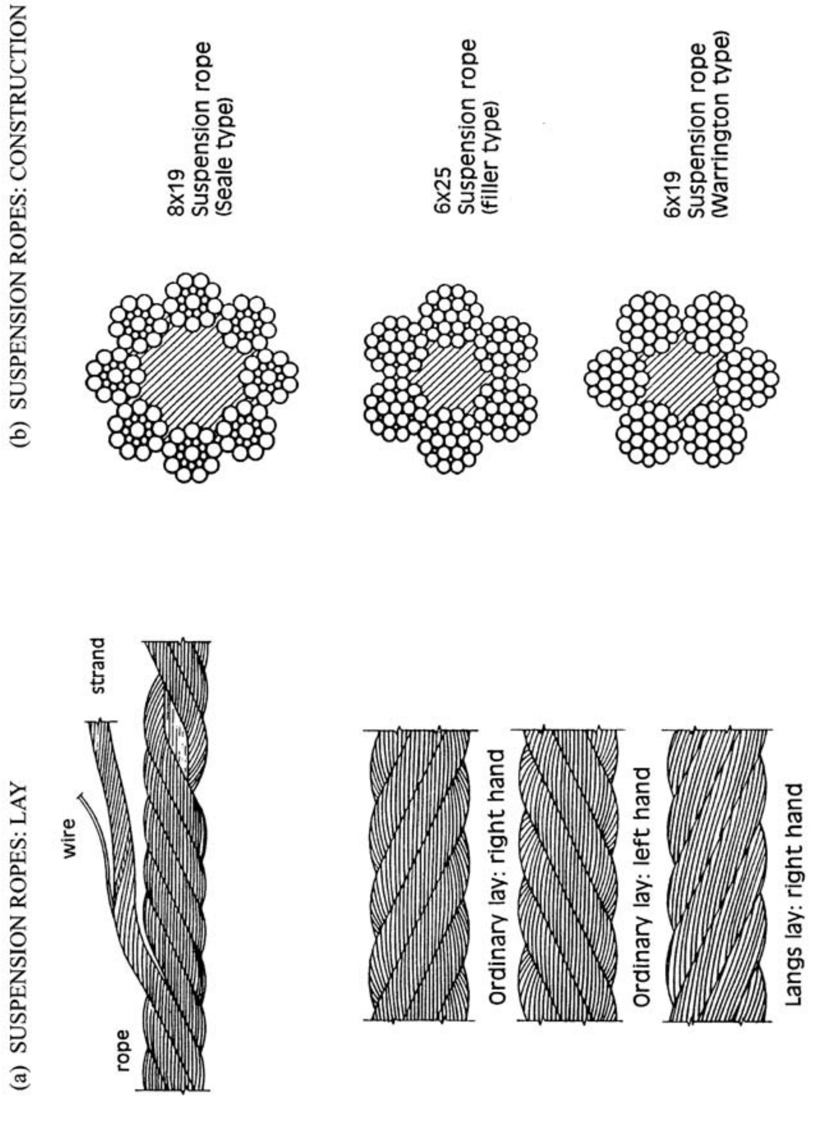

Figure 2.8. Choices of the suspension ropes.

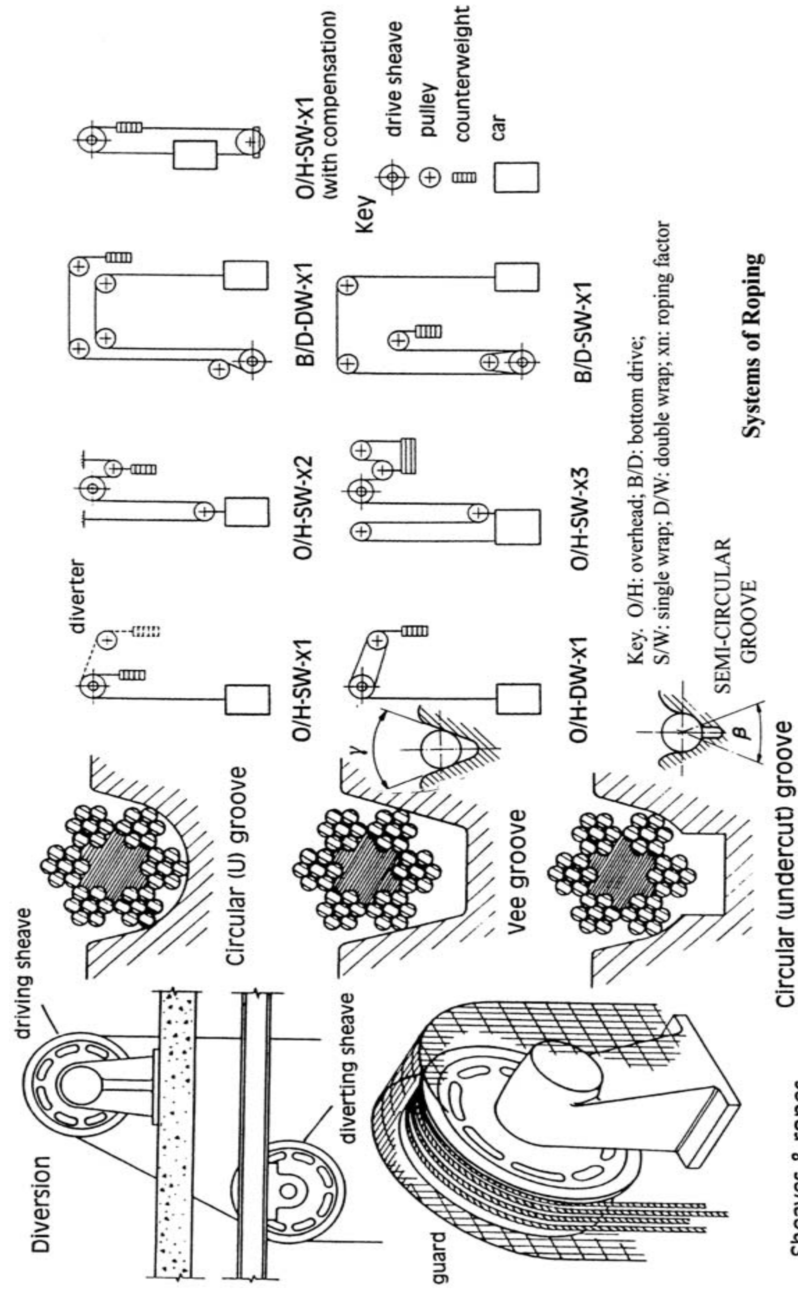

Figure 2.9. Sheaves and grooves and systems of roping (with compliments of the Association of lifts, New York).

2.3.6.1 *Suspension, compensation, safety gear and overspeed governor*

Types of suspension, number of ropes or chains

Cars and counterweights shall be suspended from steel wire ropes, or steel chains with parallel links (Galle type) or roller chains.

The ropes shall correspond to the following conditions:

(a) the nominal diameter of the ropes shall be at least 8 mm;
(b) the tensile strength of the wires shall be:
  (1) 1570 N/mm^2 or 1770 N/mm^2 for ropes of single tensile;
  (2) 1370 N/mm^2 for the outer wires and 1770 N/mm^2 for the inner wires of ropes of dual tensile;

The minimum number of ropes (or chains) shall be two.

Ropes (or chains) shall be independent.

Where reeving is used the number to take into account is that of the ropes or chains and not the falls.

Ratio between diameter of sheaves or pulleys (or drums) and diameter of ropes, safety factor of ropes and chains

The ratio between the pitch diameter of sheaves or pulleys (or drums) and the nominal diameter of the suspension ropes shall be at least 40, regardless of the number of strands.

The safety factor of the suspension ropes shall be at least:

(a) 12 in the case of traction drive with three ropes or more;
(b) 16 in the case of traction drive with two ropes;
(c) 12 in the case of drum drive.

The safety factor is the ratio between the minimum breaking load (N) of one rope (or one chain) and the maximum force (N) in this rope (or in this chain), when the car is stationary at the lowest level, with its rated load. For the calculation of the maximum force the following must be taken under consideration: the number of ropes (or chains), the reeving factor (in the case of reeving), the rated rope, the mass of the car, the mass of the rope (or chain) and the mass of the portion of the travelling cables and any compensation devices suspended from the car.

The junction between the rope and the rope terminations should be examined and shall be able to resist at least 80% of the minimum breaking load of the rope.

The ends of the ropes shall be fixed to the car, counterweight or suspension points by means of metal or resin filled sockets, self tightening wedge type sockets, heart shaped thimbles with at least three suitable rope grips, hand spliced eyes, ferrule secured eyes, or any other system with equivalent safety.

The fixing of the ropes on the drums shall be carried out using a system of blocking with wedges, or using at least two clamps or any other system with equivalent safety.

The safety factor of the suspension chains shall be at least ten.

The ends of each chain shall be fixed to the car, counterweight or suspension points by suitable terminations. The junction between the chain and the chain termination shall be able to resist at least 80% of the minimum breaking load of the chain.

The tensile force in the overspeed governor rope produced by the governor, when tripped, shall be at least the greater of the following two values:

(a) either 300 N, or
(b) twice that necessary to engage the safety gear.

2.3.6.2 *Overspeed governor ropes*

The overspeed governor shall be driven by a very flexible wire rope.

The breaking load of the rope shall be related by a safety factor of at least 8 to the tensile force produced in the rope of the overspeed governor when tripped.

The nominal rope diameter shall be at least 6 mm.

The ratio between the pitch diameter of the overspeed governor pulley and the nominal rope diameter shall be at least 30.

The rope shall be tensioned by a tensioning pulley. This pulley (or its tensioning weight) shall be guided. During the engagement of the safety gear, the governor rope and its attachments shall remain intact, even in the case of a braking distance greater than normal.

The rope shall be easily detachable from the safety gear.

Traction

The following formula shall be satisfied:

$$\frac{T_1}{T_2} \times C_1 \times C_2 \leq e^{fa} \tag{2.17}$$

where

T_1/T_2 = ratio between the greater and the smaller static force in the portions of rope situated on either side of the traction sheave in the following cases:

car stationary at the lowest landing with a load equivalent to 125% of the rated load;
car stationary at the highest landing level, unloaded.
C_1 = coefficient taking account of acceleration, deceleration and specific conditions of the installation.

$$C_1 = \frac{g_n + a}{g_n - a} \tag{2.18}$$

g_n = standard acceleration of free fall (m/s^2);
a = breaking deceleration of the car (m/s^2).
The following minimum values of C_1 may be permitted:

1.10 for rated speeds $0 < v \leq 0.63$ m/s;
1.15 for rated speeds 0.63 m/s $< v \leq 1.00$ m/s;
1.20 for rated speeds 1.00 m/s $< v \leq 1.60$ m/s;
1.25 for rated speeds 1.60 m/s $< v \leq 2.50$ m/s.

For rated speeds exceeding 2.50 m/s, C_1 shall be calculated for each specific case but shall not be less than 1.25.

C_2 = coefficient taking account of the variation in profile of the groove due to wear;
$C_2 = 1$ for semicircular or undercut grooves;
$C_2 = 1.2$ for vee grooves;
e = base for natural logarithms;
f = friction factor of the ropes in the grooves;

$$f = \frac{\mu}{\sin \gamma/2} \quad \text{for vee grooves;} \tag{2.19}$$

$$f = \frac{4\mu\,(1 - \sin \beta/2)}{\pi - \beta - \sin \beta} \quad \text{for semicircular grooves or undercut grooves.} \tag{2.20}$$

α = angle of wrap of the ropes on the traction sheave (rad);
β = angle of the undercut grooves or semicircular grooves on the traction sheave (rad) ($\beta = 0$ for semicircular grooves) given in Figure (2.9);
γ = angle of the vee grooves in the traction sheave (rad) as shown in Figure (2.9);
μ = coefficient of friction between steel ropes and cast iron pulleys = 0.09.

Specific pressure of the ropes in the grooves.

The specific pressure is calculated according to the following formulae:

$$p = \frac{T}{ndD} \times \frac{8\cos\beta/2}{\pi - \beta - \sin\beta} \quad \text{for undercut or semicircular grooves;} \tag{2.21}$$

$$p = \frac{T}{ndD} \times \frac{4.5}{\sin\gamma/2} \quad \text{for vee grooves.} \tag{2.22}$$

In no case shall the specific pressure of the ropes exceed the following value, with the car loaded with its rated load:

$$p \le \frac{12.5 + 4v_c}{1 + v_c} \tag{2.23}$$

It is the responsibility of the manufacturer to take account of the individual characteristics and the conditions of use in the choice of pressure.

d $=$ diameters of the ropes (mm);
$D =$ diameter of the traction sheave (mm);
n $=$ number of ropes;
p $=$ specific pressure (N/mm$_2$);
$T =$ static force in the ropes to the car at the level of the traction sheave, when the car is stationary at the lowest landing level with its rated load (N);
$v_c =$ speed of the ropes corresponding to the rated speed of the car (m/s).

2.3.6.3 *Suspension ropes and their connections – American practice*

A reference is made to ASME A17.1 (1998) regarding data on suspension ropes and their connections

The elevator cars shall be suspended by steel wire ropes attached to the car frame or assign around sheaves attached to the car frame specified in Rule 203.1. Ropes which have previously been installed and used on another installation shall not be reused.

Only iron (low carbon steel) or steel wire ropes, having the commercial classification 'Elevator Wire Rope,' or wire rope specifically constructed for elevator use, shall be used for the suspension of elevator cars and for the suspension of counterweights. The wire material for ropes shall be manufactured by the open-hearth or electric furnace process or their equivalent.

The factor of safety of the suspension wire ropes shall not be less than shown in Table 2.6.

The minimum factor of safety for intermediate rope speeds is compared. The factor of safety shall be based on the actual rope speed corresponding to the actual rate speed of the car.

The factor of safety shall be calculated by the following formula:

$$f = \frac{S \times N}{W} \tag{2.24}$$

where

N $=$ number of runs of rope under load. For 2:1 roping, N shall be two times the number of ropes used, etc.
S $=$ manufacturer's rated breaking strength of one rope
$W =$ maximum static load imposed on all car ropes with the car and its rated load at any position in the hoistway.

Table 2.6. Minimum factors of safety for suspension wire ropes.

Rope speed, ft/min	Minimum factor of safety: Passenger	Minimum factor of safety: Freight	Rope speed, ft/min	Minimum factor of safety: Passenger	Minimum factor of safety: Freight
50	7.60	6.65	650	10.85	9.65
75	7.75	6.85	700	11.00	9.80
100	7.95	7.00	750	11.15	9.90
125	8.10	7.15	800	11.25	10.00
150	8.25	7.30	850	11.35	10.10
175	8.40	7.45	900	11.45	10.15
200	8.60	7.65	950	11.50	10.20
225	8.75	7.75	1000	11.55	10.30
250	8.90	7.90	1050	11.65	10.35
300	9.20	8.20	1100	11.70	10.40
350	9.50	8.45	1150	11.75	10.45
400	9.75	8.70	1200	11.80	10.50
450	10.00	8.90	1250	11.80	10.50
500	10.25	9.15	1300	11.85	10.55
550	10.45	9.30	1350	11.85	10.55
600	10.70	9.50	1400–2000	11.90	10.55

General note: 1 ft/min = 5.08 E – 0.3 m/s.

Type of rope fastenings

The car and counterweight ends of suspension wire ropes, or the stationary hitch-ends where multiple roping is used, shall be fastened in such a manner that all portions of the rope except the portion inside the rope sockets shall be readily visible.

Fastening shall be:

(1) by individual tapered rope sockets or
(2) by other types of rope fastenings, if approved by the enforcing authority, on the basis of adequate tensile and fatigue tests made by a qualified laboratory provided that:
  i. such fastenings conform to the requirements of Rules 212.9b and 212.9c;
  ii. the rope socketing shall be such as to develop at least 80% of the ultimate breaking strength of the strongest rope to be used in such fastenings; and
  iii. U-bolt type rope clips (clamps) shall not be used for such fastenings.

(a) **Adjustable shackle rods**
The car ends, or the car or counterweight dead ends where multiple roping is used, of all suspension wire ropes of traction type elevators shall be provided with shackle rods of a design which will permit individual adjustment of the rope lengths. Similar shackle rods shall be provided on the car or counterweight ends of compensating ropes.

(b) **Tapered rope sockets**
Tapered rope sockets shall be of a design as shown in Fig. (2.10), and shall conform to the following
  (1) The axial length L of the tapered portion of the socket shall be not less than 4 3/4 times the diameter of the rope used.
  (2) The axial length L' of the open portion of the rope socket shall be not less than 4 times the diameter of the rope used.
  (3) The length of the straight bore L'' at the small end of the socket shall be not more than 2 in. (51 mm) nor less than 1/8 in. (3.3 mm), and its outer edge shall be rounded and free from cutting edges.

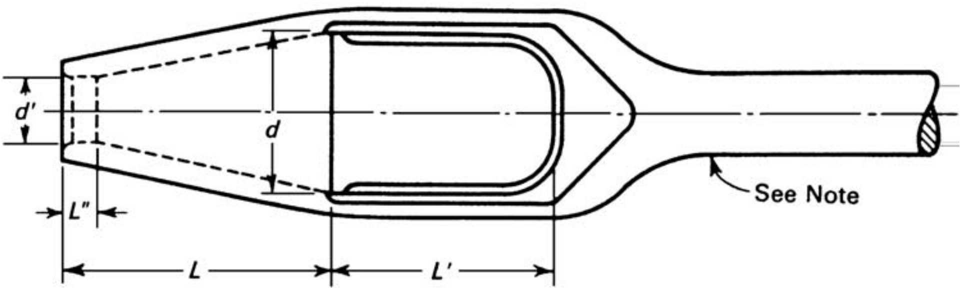

Figure 2.10. Tapered rope sockets.
Note: Rope socket and shackle rod may be in one piece, as shown, (unit construction) or the socket and rod may be separate.

Table 2.7. Relation of rope diameter of the small socket hole.

Nominal rope diameter, inches	Maximum diameter of hole d′, inches
3/8–7/16 inclusive	3/32 larger than nominal rope diameter
1/2–3/4 inclusive	1/8 larger than nominal rope diameter
7/8–1/8 inclusive	5/32 larger than nominal rope diameter
1 1/4–1 1/2 inclusive	3/16 larger than nominal rope diameter

General note: 1 in. = 25.4 mm.

(4) The diameter *d* of the hole at the large end of the tapered portion of the socket shall be not less than 2 1/4 times nor more than 3 times the diameter of the wire rope used.
(5) The diameter *d′* of the hole at the end of the tapered portion of the socket shall be not more than shown in Table (2.7).

(c) **Rope socket embedment medium**
Only Babbitt metal or thermosetting resin compositions intended for elevator wire rope socketing shall be used to secure ropes in tapered sockets. The embedment material shall conform to the following requirements:
(1) *Babbitt metal*
Babbitt metal shall contain at least 9% of antimony and shall be clean and free from dross; or
(2) *Thermosetting resin composition*
I. *Physical properties*
The thermoset resin composition shall have the following properties:
i. *Viscosity of resin-catalyst mixture*
The viscosity of the resin-catalyst mixture shall be sufficiently low to permit rapid, complete saturation of the rope rosette in order to prevent entrapment of air.
ii. *Flash point*
All components shall have a minimum flash point of 80°F (27°C).
iii. *Shelf life*
All components shall have a minimum of 1 yr shelf life at 70°F (21°C).
iv. *Pot life and cure time*
After mixing, the resin-catalyst mixture shall be pourable for a minimum of 8 min at 70°F (21°C) and shall cure within 1 hr after hardening. Heating of the resin mixture in the socket to accelerate curing shall follow the resin manufacturer's instructions.
II. *Cured resin*
i. *Socket performance*
Resin, when cured, shall develop sufficient holding strength to solvent-washed wire in wire rope sockets to develop 80% of the ultimate strength of all types of elevator

wire rope. No slippage of wire is permissible when testing resin-filled rope socket assemblies in tension; however, after testing, some seating of the resin cone may be apparent and is acceptable. Resin terminations shall also be capable of withstanding tensile shock loading.

ii. *Shrinkage*

The volumetric shrinkage of fully cured resin shall not exceed 2%. The use of an inert filler in the resin is permissible.

iii. *Curing*

The resin-catalyst mixture shall be capable of curing either at ambient [60°F-100°F (16°C-38°C)] or elevated temperatures. At temperatures below 60°F (16°C), an elevated temperature cure shall be used.

(d) **Minimum number and diameter of suspension ropes**

The minimum number of hoisting ropes used shall be three for traction elevators, and two for drum-type elevators.

When a car counterweight is used, the number of counterweight ropes shall be not less than two.

(1) The term "diameter" where used in this Section shall refer to the nominal diameter as given by the rope manufacturer.
(2) The minimum diameter of hoisting and counterweight ropes shall be 3/8 in. (9.5 mm).
(3) Outer wires of the ropes shall be not less than 0.024 in. (0.61 mm) in diameter.

(e) **Anti-rotation devices**

Following the completion of the rope socketing and any adjustments of individual shackle rods as provided for in Rule 212.9b, a piece of wire rope shall be inserted through the openings [Rule 212.2b(2)] of all the rope sockets joined in a hand-tight continuous loop by means of not less than two wire rope clips. This continuous loop shall not restrict the lateral movement of the shackle rods and is intended to limit the rotation of the shackle rods.

(f) **Auxiliary rope-fastening devices**

Auxiliary rope-fastening devices, designed to support elevator cars or counterweights if any regular rope fastening fails, may be provided subject to the following requirements.

(1) They shall be approved by the enforcing authority on the basis of adequate tensile and fatigue tests made by a competent designated laboratory.
(2) The device and its fastenings, in its several parts and assembly, shall have a strength at least equal to that of the manufacturer's breaking strength of the rope to which it is to be attached.
(3) Steel parts used in the device shall be cast or forged with an elongation of not less than 20%, conforming to ANSI/ASTM A 668 Class B for forgings and ANSI/ASTM A 27, Grade 60/30 for cast steel, and shall be stress relieved.
(4) The device shall be so designed and installed that:
    i. it will not become operative unless there is a failure of the normal rope fastening;
    ii. it will function in a rope a movement of not over 1 1/2 in. (38 mm);
    iii. it will not interfere with the vertical or rotational movements of the rope during normal service.
(5) Means shall be provided to cause the electric power to be removed from the driving machine motor and brake when any auxiliary fastening device operates.

    Such means shall:
    i. have all electrical parts enclosed;
    ii. be of the manually reset type which can be reset only when the wire rope or ropes have been resocketed and the auxiliary rope-fastening device restored to its normal running position.
(6) The method used to attach the device to the rope shall be such as to prevent injury to, or appreciable deformation of, the rope.
(7) The installation of the device shall not reduce the required overhead clearances.

(8) The car-frame supports for the fastening members of the device shall conform to the requirements of Rule 203.13, or where existing conditions will not permit compliance with this requirement, other means of fastening may be used subject to the approval of the enforcing authority.

Each device shall be permanently marked with the name of the manufacturer by means of metal tags or plates with the following data of the wire rope for which they are designated to be used:

(1) diameter of the rope in inches;
(2) manufacturer's rated breaking strength of the rope;
(3) construction classification of the wire rope.

The material and marking of the tags or plates shall conform to the requirements of Rule 207.3c, except that the height of the letters and figures shall be not less than 1/16 in. (1.6 mm).

2.4 HYDRAULIC LIFTS

2.4.1 *Introduction*

The requirements given in Paragraph (2.3) for *Electric lifts* are to be followed in general. Under this section only variations related to Hydraulic lifts specifications are described.

2.4.2 *Mechanical equipment*

Guide Rails, Guide-Rail Supports, and Fastenings (ASME A17.1)

Direct-Plunger Hydraulic Elevators
Guide rails, guide-rail supports, and their fastenings shall conform to the requirements of Section 200, with the following exceptions.

(1) Rule 200.4a shall not apply where car safeties are not used. It shall apply where car safeties are used and the maximum load on the car side for direct-plunger hydraulic elevators is the maximum weight of the car and its rated load plus the weight of the plunger.
(2) Rule 200.4b shall not apply where safeties are not used.
(3) Rule 200.9a(1) shall not apply where safeties are not used.
(4) Rule 200.11 shall not apply.

2.4.2.1 *Roped hydraulic elevators*

(1) Car and counterweight guide rails, guide-rail supports, and their fastenings shall conform to the requirements of Section 200.
(2) The travelling sheave, if provided, shall be guided by means of suitable guide shoes and guide rails adequately mounted and supported.

Plates (2.2a) and (2.2b), page 29 and 30, give dimensions specifications adopted by OTIS Company. The Hydraulic Elevator arrangement is shown in Plate (2.3).

2.4.2.2 *Car buffers or bumpers*

Car buffers or bumpers shall be provided and shall conform to the requirements of Section 201, provided that in applying the requirements of Section 201 to hydraulic elevators:

(a) The term 'operating speed in the down direction with rated load' shall be substituted for the words 'rated speed', wherever these words appear.

2.4.2.3 *Valves (A reference is made to Plate 2.4)*

(a) *Supply line shutoff valve*

A manual shutoff valve shall be installed in the supply line to the cylinder of every hydraulic elevator where the cylinder is not exposed to inspection. The shutoff valve shall be located in the machine room.

(b) *Pump relief valve*

(1) Each pump or group of pumps shall be equipped with a relief valve conforming to the following requirements:

i. *Type and location*

The relief valve shall be located between the pump and the check valve and shall be of such a type and so installed in the by-pass connection that the valve cannot be shut off from the hydraulic system.

ii. *Setting*

The relief valve shall be pre-set to open at a pressure not greater than 125% of working pressure.

iii. *Size*

The size of the relief valve and by-pass shall be sufficient to pass the maximum rated capacity of the pump without raising the pressure more than 20% above that at which the valve opens. Two or more relief valves may be used to obtain the required capacity.

iv. *Sealing*

Relief valves having exposed pressure adjustments, if used, shall have their means of adjustment sealed after being set to the correct pressure.

(2) No relief valve is required for centrifugal pumps driven by induction motors, provided the shut-off, or maximum pressure which the pump can develop, is not greater than 135% of the working pressure at the pump.

(c) *Check valve*

A check valve shall be provided and shall be so installed that it will hold the elevator car with rated load at any point when the pump stops or the maintained pressure drops below the minimum operating pressure.

(d) *Manual lowering valve*

A manually operated valve, located on or adjacent to the control valves, shall be provided and identified, which permits lowering the car at a speed not exceeding 20 ft/min (0.10 m/s).

2.4.2.4 *Cylinders (A reference is made to Plate No. 2.5)*

(a) *Material*

The cylinder and connecting couplings for the cylinder shall be made of materials in compliance with the following:

(1) For tensile, compressive, bending, and torsional loading the cylinder and connecting couplings shall have a factor of safety of not less than 5 based on ultimate strength.

(2) For pressure calculations the cylinder and connecting coupling shall have a factor of safety not less than that calculated while using code requirements.

(b) *Cylinder design*

Cylinders shall be designed and constructed in accordance with the codified method.

(c) *Clearance at bottom of cylinder*

Clearance shall be provided at the bottom of the cylinder so that the bottom of the plunger will not strike the safety bulkhead of the cylinder when the car is resting on its fully compressed buffer (see Rule 301.3).

(d) *Safety bulkhead*

Cylinders installed below ground shall be provided with a safety bulkhead having an orifice of a size that would permit the car to descend at a speed not greater than 15 ft/min

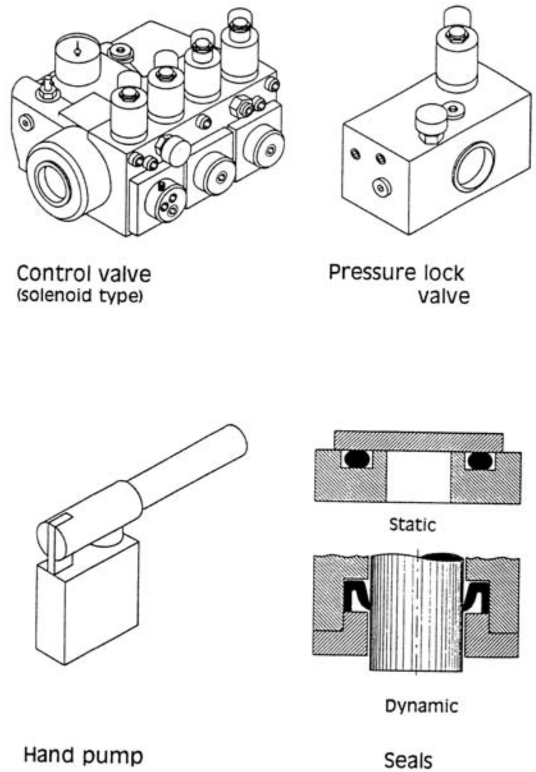

HYDRAULIC COMPONENTS

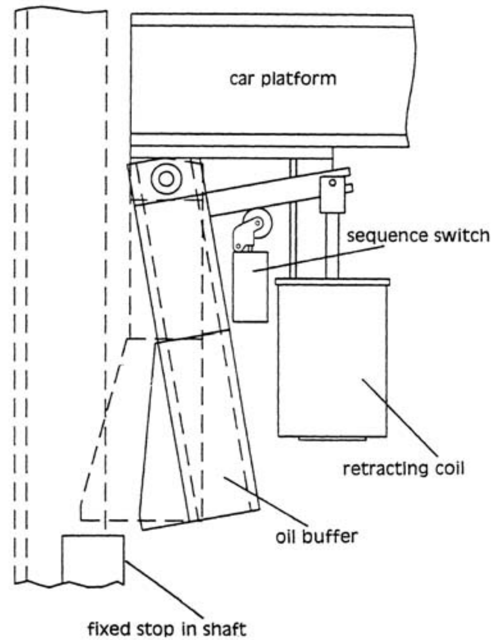

HYDRAULIC PAWL DEVICE

Plate 2.4. Hydraulic components and prawl device (with compliments from the Institution of Mechanical Engineering, London).

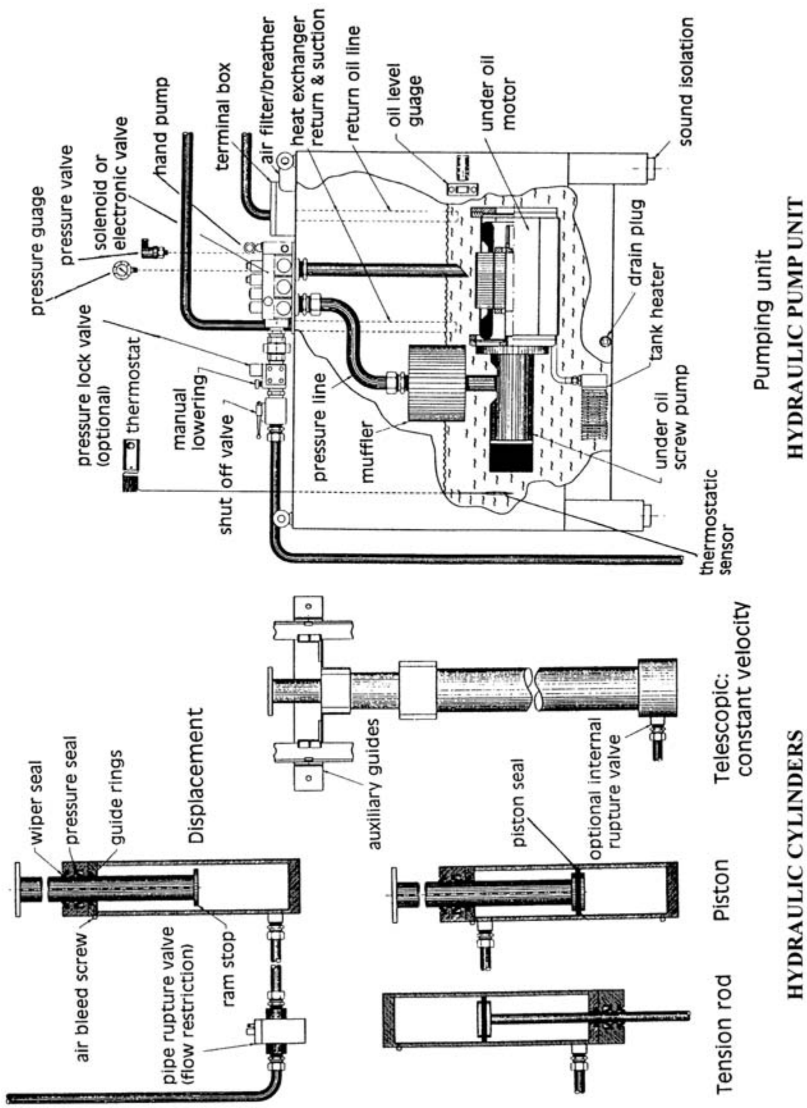

Figure 2.5. Hydraulic cylinders and pumps. (Courtesy Institution of Mechanical Engineering London).

(0.076 m/s), nor less than 5 ft/min (0.025 m/s). A space of not less than 1 in. (25 mm) shall be left between the welds of the safety bulkhead and the cylinder head. Safety bulkheads shall conform to the requirements of Rule 302.3f. These requirements do not apply where a double cylinder is used and where both inner and outer cylinders conform to the requirements of Rule 302.3.

(e) *Cylinder packing heads*
Cylinder packing heads shall conform to the appropriate requirements of Rules 302.4 and 1302.3.

(f) *Closed cylinder and plunger heads*
Closed heads of cylinders, and heads of plungers subject to fluid pressure, shall conform to the following requirements:

(1) *Closed cylinder heads*
Closed heads of cylinders only shall be of dished seamless construction, concave to pressure, except if the bottom of the cylinder is supported, and if the cylinder is not below ground.

(2) *Design formulas*
They shall be designed and constructed in accordance with the applicable formulas in Rule 1302.3, provided that steel heads shall in no case have a thickness less than that required for the adjoining shell.

(3) *Dished seamless heads, convex to pressure*
Dished seamless heads, convex to pressure if used on plungers, shall have a maximum allowable working pressure of not more than 60% of that for heads of the same dimensions with pressure on the concave side.

(4) *Reinforced heads*
Reinforced heads shall be designed and constructed so that the maximum stress at rated capacity shall not exceed 12,000 psi (83 MPa) for mild steel and 1/5 of the ultimate strength of the material for other metals.

(5) *Heads subjected to mechanical loads in addition to fluid pressure loads*
Pressure heads subjected to mechanical loads in addition to fluid pressure loads shall be so designed and constructed that the combined stresses will not exceed the limits specified in Rules 302.3f(2), (3) and (4).

2.4.2.5 *Plungers*

(a) *Material*
The plunger and connecting couplings for the plunger shall be made of materials in compliance with the following:

(1) For tensile, compressive, bending, and torsional loading the plunger and connecting couplings shall have a factor of safety of not less than 5 based on ultimate strength.
(2) For pressure calculations the plunger and connecting coupling shall have a factor of safety not less than that calculated as specified in Rule 1302.5.

(b) *Plunger design*

(1) Plungers shall be designed and constructed in compliance with the applicable formula in Rule 1302.1 for calculation of elastic stability, bending, and external pressure.
(2) Plungers subject to internal pressure shall also be designed and constructed in accordance with Cylinder Design formula in Rule 1302.2.

(c) *Plunger connection*

(1) When the driving machine is not subjected to eccentric loading, it shall:
   i. carry in tension the weight of the plunger with a factor of safety not less than 4;
   ii. restrict total vertical movement to not less than 20% of the buffer stroke, where vibration damping means are provided.

(2) When the driving machine is not subjected to eccentric loading, the following additional requirements apply:
   i. The plunger connection to the car shall also be so designed and constructed as to transmit the full eccentric moment into the plunger with a factor of safety not less than 4.
   ii. The plunger and plunger connection to the car shall also be so designed and constructed that the total vertical deflection of the loading edge of the car platform due to eccentric loading of the car shall not exceed 3/4 in. (19 mm).

(d) *Plunger joints*
Plungers composed of more than one section shall have joints designed and constructed to:
(1) carry in tension the weight of all plunger sections below the joint with a factor of safety of not less than 4;
(2) transmit in compression the gross load on the plunger with a factor of safety of not less than 5 based on ultimate strength;
(3) withstand without damage any forces resulting from a plunger stop as described in Rule 302.4b;
(4) For eccentric loading, the joints shall conform to the requirements.

(e) *Plungers subject to external pressure*
For plungers subjected to external pressure, the working pressure shall be not greater than indicated by the formula in Rule 1302.1(c).

(f) *Plunger heads subject to fluid pressure*
Heads of plungers subject to fluid pressure shall conform to the requirements of Rule 302.3f.

(g) *Plunger-follower guide*
A plunger-follower guide may be used provided it is arranged so that the elevator is always in a position where the unsupported length of the plunger conforms to the 'maximum free length' as defined in Rule 1302.1, and to open the power circuit if this length is exceeded.

Plunger-follower guides shall be designed and constructed to comply with all applicable requirements of Section 203.
(1) Car buffers or bumpers shall be so located that the car will come to rest on the bumper or fully compressed buffer, or to a fixed stop, before the plunger reaches its down limit of travel.
(2) When multiple buffers are used, each shall be identical and designed for an equal proportion of the loading described in Rule 301.3(b) of the code.
(3) Plunger weight less buoyant effects of plungers at the buffer strike point shall be added, if applicable, and used in buffer calculations.

Solid bumpers are permitted on hydraulic elevators having an operating speed in the down direction of 50 ft/min (0.25 m/s) or less.

(h) *Counter weights, buffers and frames*
(1) *Counterweight buffers*
Where counterweights are provided, counterweight buffers shall not be provided. (See Rule 300.8f for required counterweight run by of the code).
(2) *Counterweights*
Counterweights, where provided, shall conform to the requirements of Section 202 of the code, except that rod-type counterweights may be used provided that, in addition to the two tie rods, they also have two supported rods having a factor of safety of not less than 5 with the elevator at rest and the counterweight at the top of its travel.
(3) *Car frames and platforms*
Requirements
(3.1) Direct-plunger hydraulic elevators shall be provided with car frames and platforms conforming to the requirements of Section 203, subject to the modification hereinafter specified. (See Rule 302.2c for connection between plunger and platform or car frame). The car frame may be omitted provided the following requirements are met.
   i. The platform frame shall be of such design and construction that all eccentric loads are carried through the structure and plunger attachment into the plunger (see Rule 302.2c).

ii. The platform frame shall be guided on each guide rail by single guiding members attached to the frame.
iii. The platform frame shall be designed to withstand the forces resulting from the class of loading for which the elevator is designed without exceeding the stresses and deflections in Rules 203.10, 203.11 and 1301.6 of the code.
iv. The plunger connection to the car shall be designed to transmit the full eccentric moment into the plunger with a factor of safety of not less than 4 (see Rule 302.2c of the code).
v. The plunger shall be designed to withstand the stresses due to bending during the loading and unloading of the platform based on the type of loading for which the elevator is designed (see Rule 1302.1b).
vi. Car safeties shall not be provided.

(3.2) Roped hydraulic elevators shall be provided with car frames and platforms conforming to the requirements of Section 203 of the code.

(4) *Maximum allowable stresses and deflections in car frame and platform members Direct-plunger hydraulic elevators*
The stresses and deflections in car frame and platform members and their connections, based on the static load imposed upon them, shall be not more than those permitted by Section 203, provided that the maximum stresses in the car frame uprights which are normally subject to compression shall conform to the requirements of Rule 1303.1a.

(5) *Roped hydraulic elevators*
The stresses and deflections in car and platform members and their connections, based on the static load imposed upon them, shall be not more than those permitted by Section 203, and shall conform to the requirements of Section 1301.

2.4.2.5.1 *Calculations of stresses and deflections in car frame and platform members*

(1) *Direct-plunger hydraulic elevators*
- The calculations of the stresses and deflections in side-post car frame and platform members shall be based on the formulas and data in various specifications.
- For cars with corner-post or sub-post car frames, the formulas and specified methods of calculations do not generally apply and shall be modified to suit the specific conditions and requirements in each case.

(2) *Roped hydraulic elevators*
- The calculations of the stresses and deflections in side-post car frame and platform members shall be based on the formulas and data in various specifications.
- For cars with corner-post or sub-post car frames, or where the rope hitches are not on the crosshead, the formulas and specified methods of calculations do not generally apply and shall be modified to suit the specific conditions and requirements in each case.

2.4.2.6 *Driving machines*

(a) *Driving machine and connections*
Direct-plunger hydraulic elevators
- The driving member of the driving machine shall be attached to the car frame or car platform with fastenings of sufficient strength to support that member with a factor of safety of not less than 4.
- The connection to the driving machine shall be capable of withstanding, without damage, any forces resulting from a plunger stop as described in Rule 302.4b.
- Any plunger or cylinder head connector or connection shall conform to the requirements.

(b) *Roped hydraulic elevator*
- The driving member of the driving machine shall be vertical. Roped hydraulic elevators shall be suspended with not less than 2 wire ropes per driving machine in conformance with the requirements. The roping ratio which relates the driving machine speed to the car speed shall not exceed 1:2.

- Sheaves used to transfer load from the driving machine to the car frame through wire ropes shall conform to the requirements.
- Means shall be provided to prevent the ropes, if slack, from leaving the sheave grooves.
- A slack rope device with an enclosed manually reset switch shall be provided which shall cause the electric power to be removed from the pump motor and the control valves should any rope become slack.
- The travelling sheave shall be attached to the upper end of the plunger or cylinder of the hydraulic driving machine with fastenings having a minimum factor of safety of 4 based upon the ultimate strength of the material used. The load to be used in determining the factor of safety shall be the resultant of the maximum tensions in the ropes leading from the sheave with the elevator at rest and width rated load in the car.

2.5 DESIGN DATA AND FORMULAS (AMERICAN PRACTICE) *ASME FORMULAE* MODIFIED S.I. UNITS BASED ON IMechE, LONDON

2.5.1 *Introduction to basic formulas*

For the purpose of structural design, the rated load shall be considered to be not less than:

(Imperial Units), ASME

$$\text{Structural rated load (lb)} = 4.6(\mathrm{W} + 8)A \tag{2.25}$$

(SI Units), IMechE

$$\text{Structural rated load (kg)} = 0.27(\mathrm{W} + 203)A \tag{2.26}$$

where

A = length of the horizontal projection of the entire truss measured along its centreline, ft (m)
W = width of the escalator, in. (mm).

Machinery

(1) For the purpose of driving machine and power transmission calculations, the rated load for all single driving machines shall be considered to be not less than:

(Imperial Units), ASME

$$\text{Machinery rated load (lb)} = 3.5(\mathrm{W} + 8)B_1 \tag{2.27}$$

(SI Units), IMechE

$$\text{Machinery rated load (kg)} = 0.21(\mathrm{W} + 203)B_1 \tag{2.28}$$

(2) The rated load per module for two or more modular driving machines shall be considered to be not less than:

(Imperial Units), ASME

$$\text{Machinery rated load (lb)} = 3.5(\mathrm{W} + 8)B_2 \tag{2.29}$$

Limits of speed

The rated speed shall be not more than 125 ft/min (0.64 m/s), measured along the centreline of the steps in the direction of travel.

Minimum rated load, passenger elevators

The following formulas shall be used for determining the minimum rated load of passenger elevators (see also Rule 207.1 from the code).

(a) For an elevator having an inside net platform area of not more than 50 ft^2 (4.65 m^2)

(Imperial Units), ASME

$$W = 0.667A^2 + 66.7A \tag{2.30}$$

(SI Units), IMechE

$$W = 35.05A^2 + 325.7A \tag{2.31}$$

(b) For an elevator having an inside net platform area of more than 50 ft^2 (4.65 m^2)

(Imperial Units), ASME

$$W = 0.0467A^2 + 125A - 1367 \tag{2.32}$$

(SI Units), IMechE

$$W = 2.454A^2 + 610.3A - 620.1 \tag{2.33}$$

Car frame plank (buffer engagement)

The following formula shall be used to determine the stress resulting from buffer engagement:

(Imperial Units), ASME

$$\text{Stress (psi)} = \frac{D(C + W)}{2Z} \tag{2.34}$$

(SI Units), IMechE

$$\text{Stress (kPa)} = 0.009807\frac{D(C + W)}{2Z} \tag{2.35}$$

Where more than one oil buffer is used, the formula shall be modified to suit the location of the buffers.

Car frame uprights (stiles)

The total stress in each car frame upright due to tension and bending, and the slenderness ratio of each upright and its moment of inertia, shall be determined in accordance with the following formulas:

(a) Stresses due to bending and tension

(Imperial Units), ASME

$$\text{Total stress (psi)} = \frac{KL}{4HZ_u} + \frac{G}{2A} \tag{2.36}$$

(SI Units), IMechE

$$\text{Total stress (kPa)} = 0.009807\left(\frac{KL}{4HZ_u} + \frac{G}{2A}\right) \tag{2.37}$$

Where $KL/4HZ_u$ is the bending stress in each upright in the plane of the frame due to live load W on the platform for the class of loading A, B or C for which the elevator is to be used (see Rule 207.2b), $G/2A$ is the tensile strength in each upright and K is determined by the following formulas [see Fig. 2.11]:

(1) For Class A freight loading or passenger loading

(Imperial Units), ASME

$$K = \frac{WE}{8} \tag{2.38}$$

(SI Units), IMechE

$$K = 9.807\left(\frac{WE}{8}\right) \tag{2.39}$$

(2) For Class B freight loading

(Imperial Units), ASME

$$K = W\left(\frac{E}{2} - 48\right) \quad \text{or} \quad K = \frac{WE}{8} \tag{2.40}$$

Whichever is greater

(SI Units), IMechE

$$K = 9.807W\left(\frac{E}{2} - 1.219\right) \quad \text{or} \quad K = 9.807\frac{WE}{8} \tag{2.41}$$

Whichever the greater

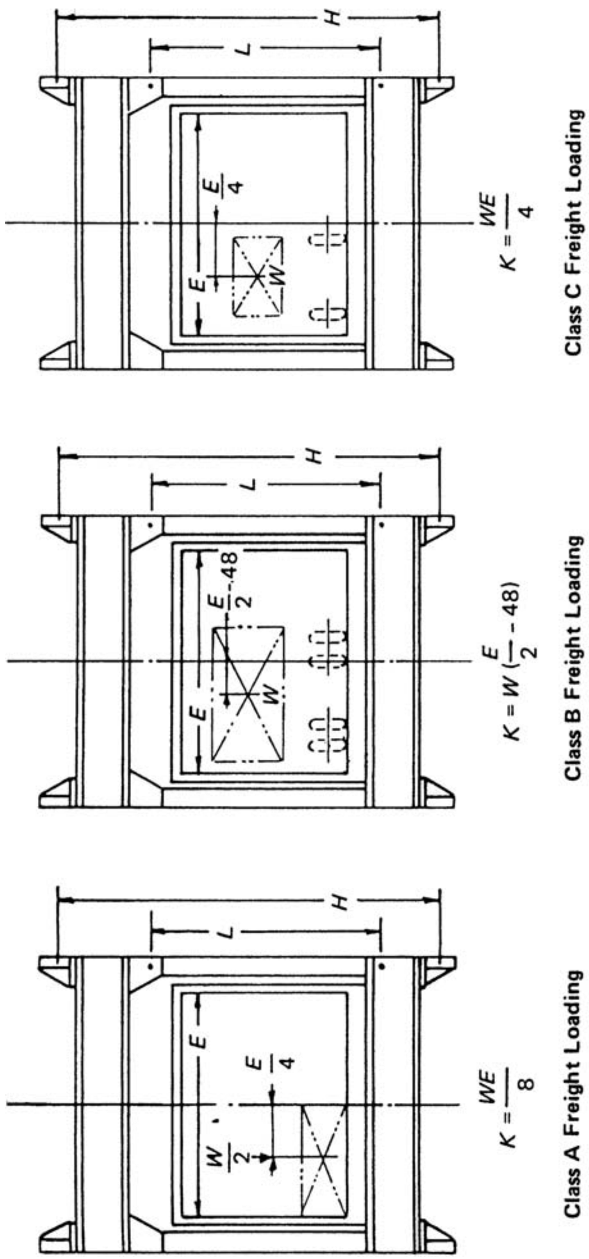

Figure 2.11. Turning moment based on class of loading (With compliments from BSI and ASME).

(3) For Class C freight loading

(Imperial Units), ASME

$$K = \frac{WE}{4} \tag{2.42}$$

(SI Units), IMechE

$$K = 9.807\left(\frac{WE}{4}\right) \tag{2.43}$$

(b) *Slenderness ratio*

The slenderness ratio L/R for uprights subject to compressions other than those resulting from safety and buffer action shall not exceed 120. Where the upper side-brace connections passenger elevator car frame uprights are located at a point less than 2/3 of L from the bottom, (top fastening in car frame plank) a slenderness ratio of L/R not exceeding 160 is permissible.

(c) *Moment of inertia*

The moment of inertia of each upright shall be not less than determined by the following formula:

(Imperial Units), ASME

$$I = \frac{KL^3}{18EH} \tag{2.44}$$

(SI Units), IMechE

$$I = \frac{KL^3}{457.2EH} \tag{2.45}$$

where

A = net area of section, in.^{2} (m^2)
C = net weight of complete elevator car, lb (kg)
D = distance between guide rails, in. (m)
E = inside clear width of car, in. (m), except for formulas in Rules 1301.5(c) and 1303.1d(4) where E = modulus of elasticity [psi (kPa)] of the material used
G = load supported by crosshead with the maximum load for the class of loading in car at rest a top terminal landing, lb (kg)
H = vertical centre distance between upper and lower guide shoes (or rollers), in. (m)
I = moment of inertia of member, gross section, in.^{4} (m^4)
K = turning moment as determined by class of loading, lbf.in. (N·m)
L = free length of uprights (distance from lowest fastening in plank), in. (m)
R = least radius of gyration of section, in. (m)
W = rated load, lb (kg)
Z = combined section moduli of plank members, gross section, in.^{3} (m^3)
Z_u = section modulus of one upright, gross section, in.^{3} (m^3).

Freight elevator platform

The calculation for stresses in the platform members of freight elevators shall be based on the following concentrated loads assumed to occupy the position which will produce the maximum stress:

(a) *For Class A loading*

25% on the rated load;

(b) *For Class B loading*

75% on the rated load or 34,000 lb (15.422 kg), whichever is less, divided into two equal parts 5 ft (1.52 m) apart;

(c) *For Class C1 loading with a loading rating of 20,000 lb (9062 kg) or less*
80% of the rated load divided into two equal parts, 30 in. (762 mm) apart;
(d) *For Class C2 loading with a loading rating of 20,000 lb (9062 kg) or less*
80% of the rated load or of the loaded truck weight, whichever is greater, divided into two equal parts 5 ft (1.52 m) apart;
(e) *For Class C1 loading with a rated load in excess of 20,000 lb (9062 kg)*
80% of the 20,000 lb (9062 kg) or of the maximum loaded truck weight, whichever is greater, divided into two equal parts 5 ft (1.52 m) apart;
(f) *For Class C3 loading.*
Determined on the bases of the actual loading conditions but not less than that required for Class A loading.

2.5.2 *Hydraulic machines and piping*

Plunger design
Plungers shall be designed and constructed in accordance with one of the following formulas:

(a) *Plungers not subject to eccentric loading*
  (1) Where slenderness ratio of plunger is less than 120

(Imperial units)

$$\frac{W}{A} = 13,600 - 0.485(L/R)^2 \tag{2.46}$$

(SI Units)

$$\frac{W}{A} = 9.773 \times 10^7 - 3.344 \times 10^3(L/R)^2 \tag{2.47}$$

  (2) Where slenderness ratio of plunger is greater than 120

(Imperial Units)

$$\frac{W}{A} = \frac{95,000,000}{(L/R)^2} \tag{2.48}$$

(SI Units)

$$\frac{W}{A} = \frac{6.552 \times 10^{11}}{(L/R)^2} \tag{2.49}$$

where

A = net area of plunger (area of metal), in.^{2} (m^2)
L = maximum free length of plunger, in. (mm). Where a plunger-follower guide is used, L shall be taken as one-half the amount that the free length would be if no follower guide was provided.
R = radius of gyration of plunger section, in. (m)
W = allowable gross weight to be sustained by plunger, lbf (N). Where a counterweight plus the unbalanced weight of the counterweight ropes may be deducted in determining W, one-half of the weight of the plunger shall be included except where a plunger-follower guide is used, in which case, 3/4 of the plunger weight shall be included.
W/A = maximum allowable fiber stress.

  (3) The plunger is 4 in. (102 mm) nominal pipe size or larger.
  (4) Pipe not lighter than schedule 40 is used and not more than 1/16 in. (1.6 mm) of metal has been removed from the wall thickness in machining.

(b) *Plungers with varying cross section*
For plungers with varying cross section, the stress shall be calculated for a factor of safety of at least 3 using accepted methods for elastic stability.

(c) *Plungers subject to eccentric loading*
For plungers subject to bending, the stresses due to bending as determined by the following formula shall be subtracted from the stresses W/A as determined by the applicable formula.

(Imperial Units), ASME

$$S\ (psi) = \frac{W_b e}{Z} \tag{2.50}$$

(SI Units), IMechE

$$S\ (kPa) = 0.009807\left(\frac{W_b e}{Z}\right) \tag{2.51}$$

where
e = eccentricity of W_b, in. (mm)
W_b = maximum eccentricity load, lb (kg). Where any or all of this load is caused by moving wheel loads imposed on the edge of the platform, the total of such loads shall be doubled for impact (see Rule 1301.6).
S = stress due to bending
Z = section modulus of plunger section, in.^{3} (mm^3)

(d) *Plungers subjected to external pressure*
For plungers subjected to external pressure, the working pressure shall be not more than that indicated by the following formulas:
(1) Where the ratio of t/d is less than 0.023

(Imperial Units), ASME

$$p = 333\left[1 - \sqrt{1 - 1600\left(\frac{t}{d}\right)^2}\right] \tag{2.52}$$

(SI Units), IMechE

$$p = 2296\left[1 - \sqrt{1 - 1600\left(\frac{t}{d}\right)^2}\right] \tag{2.53}$$

2) Where the ratio of t/d is greater than 0.023

(Imperial Units), ASME

$$p = 28,890\frac{t}{d} - 462 \tag{2.54}$$

(SI Units), IMechE

$$p = 199200\frac{t}{d} - 3185 \tag{2.55}$$

where
d = external finished diameter, in. (mm)
p = working pressure, psi (kPa)
t = finished wall thickness, in. (mm).

Cylinder Design
Cylinders shall be designed and constructed in accordance with the following formula:

$$t = \frac{pd}{2S} \tag{2.56}$$

where

d = internal diameter, in. (mm)
p = working pressure, psi (kPa)
S = design stress, psi (kPa)
t = minimum thickness of wall, in. (mm).

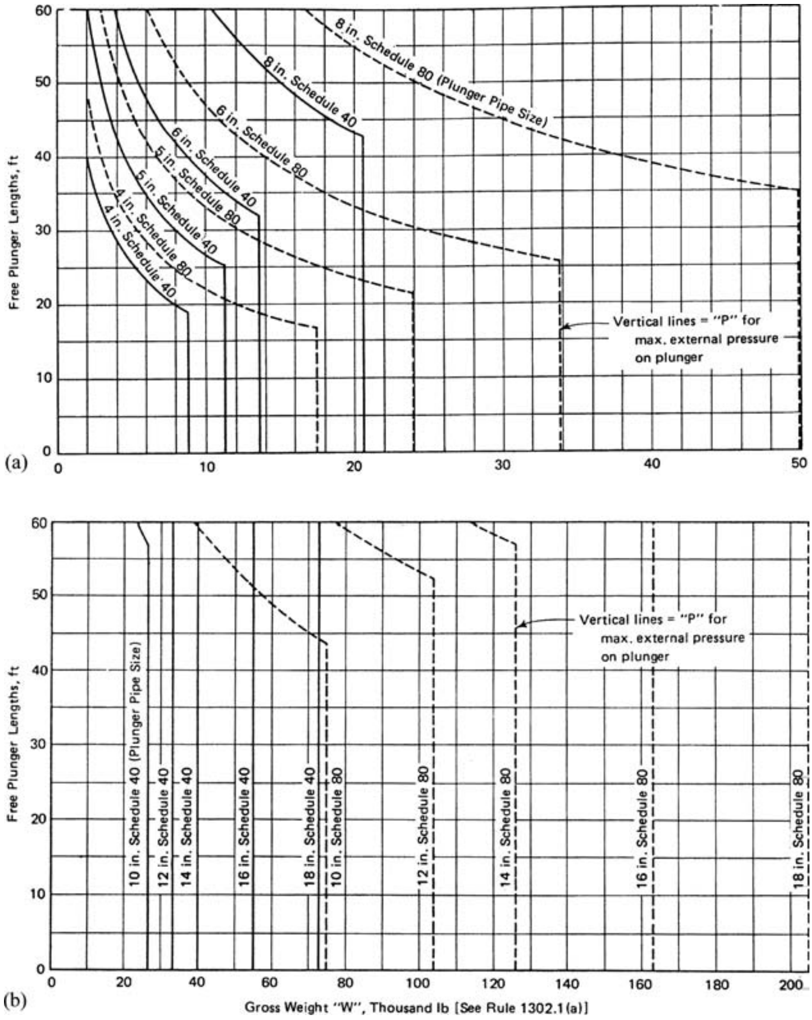

Figure 2.12. Allowable gross loads. (Courtesy ASME, New York).
General notes [Figs. 2.12(a) and (b)]:
1 ft = 0.305 m; 1 lb = 0.454 kg.
Curves are based upon the removal of not more than 1/16 in. (1.6 mm) from the well thickness in machining.
Curves stop at 60 ft (18.29 m) length for convenience only. For plunger sizes or lengths not shown on the chart see applicable formula in Rule 1302.1(a).

Cylinder and Plunger Heads

Heads of cylinders and heads of plungers subject to fluid pressure shall be designed and constructed in accordance with one of the following applicable formulas:

(a) Flat unreinforced heads

$$t = d\sqrt{\frac{p}{4S}} \tag{2.57}$$

(b) Dished seamless hemispherical heads, concave to pressure

$$t = \frac{5pr}{6S} \tag{2.58}$$

(c) Dished seamless ellipsoidal heads, concave to pressure (ellipsoidal heads in which 1/2 of the minor axis equals 1/4 the inside diameter of skirt),

$$t = \frac{5pD}{6S} \tag{2.59}$$

where

d = diameter of head between supporting edges, in. (mm)
D = inside diameter of skirt, in. (mm)
p = working pressure, psi (kPa)
r = radius to which head is dished, measured on concave side (not greater than d), in. (mm)
S = design stress, psi (kPa) (Rule 1302.5b)
t = minimum thickness of head, in. (mm).

Pipe design

The minimum wall thickness of pipe shall be detected by the following formula:

$$t = \frac{pD}{2S} + C \tag{2.60}$$

$$or \left(t - C = \frac{pD}{2S} \right) \tag{2.61}$$

where

C = 0.05 for threaded pipe up to 3/8 in. (9.5 mm) pipe size
= depth of thread for threaded pipe over 3/8 in. (9.5 mm) pipe size
= depth of groove for grooved pipe, in. (mm) 0.000 for other pipe of unreduced thickness
D = outside diameter of pipe, in. (mm)
p = working pressure, psi (kPa)
S = allowable stress, psi (kPa) (Rule 1302.5b)
t = minimum wall thickness, in. (mm).

Safety factor

The minimum factor of safety for components subject to fluid pressure shall be as follows:

$$F = \frac{5.04}{E - 2.8} + 2.7 \tag{2.62}$$

where

E = percent elongation in 2 in. (50 mm) gauge length as per ASTM Standard E8 expressed as a whole number (e.g., 20% = 20 and 5% = 5). The minimum allowable E shall be 5.
F = minimum factor of safety based on 0.2% proof stress yield point. The minimum allowable F shall be 3.

where

f_a = actual axial compressive unit stress based on gross section
f_b = actual bending unit stress
F_a = allowable axial compressive unit stress [not exceeding 17,000 – $0.485(L/R)^2$ in *Customary Units* and 117 200 – $3.344(L/R)^2$ in *SI Units*]
F_b = allowable bending unit stress [16,500 psi (113 700 kPa) if area of basis is gross section or 19,800 psi (134 400 kPa) if area of basis is net section]
L = free length of uprights (distance from lowest fastening in crosshead to top fastening in plank), in. (mm)
R = least radius of gyration of section, in. (mm).

Car frame uprights (stiles)

The stresses in each car frame upright due to compression and bending and the slenderness ratio of each upright and each moment of inertia shall be determined in accordance with the following formulas:

(1) *Stresses due to bending*

$$f_b = \frac{KL}{4HZ_u} \tag{2.63}$$

where

f_b = the bending stress in each upright in the plane of the frame due to the live load W on the platform for the class of loading A, B, or C for which the elevator is to be used
K = turning moment in lbf.in. (N·m) as determined by the class of loading by the following formulas:

(a) For Class A freight loading or passenger loading

(Imperial Units)

$$K = \frac{WE}{8} \tag{2.64}$$

(SI Units)

$$K = 9.807\left(\frac{WE}{8}\right) \tag{2.65}$$

(b) For Class B freight loading

(Imperial Units)

$$K = W\left(\frac{E}{2} - 48\right) \quad \text{or} \quad K = \frac{WE}{8} \tag{2.66}$$

(SI Units)

$$K = 9.807W\left(\frac{E}{2} - 1.219\right) \quad \text{or} \quad K = 9.807\,\frac{WE}{8} \tag{2.67}$$

Whichever the greater

(c) For Class C freight loading

(Imperial Units)

$$K = \frac{WE}{4} \tag{2.68}$$

(SI Units)

$$K = 9.807\left(\frac{WE}{4}\right) \tag{2.69}$$

Note [Rule 1303.1d(1)]: Symbols used in the above formulas are defined in Rule 1301.1a.

(2) *Stresses due to compression*

$$f_a = \text{compressive stress in each upright}$$

(3) *Slenderness ratio*
The slenderness ratio L/R for uprights subject to compressions other than those resulting from safety and buffer action shall not exceed 120. Where the upper side-brace connections passenger elevator car frame uprights are located at a point less than 2/3 of L from the bottom, (top fastening in car frame plank) a slenderness ratio of L/R not exceeding 160 is permissible.

(4) *Moment of inertia*
The moment of inertia of each upright shall be not less than determined by the following formula:

(Imperial Units), ASME

$$I = \frac{KL^3}{18EH} \tag{2.70}$$

(SI Units), IMechE

$$I = \frac{KL^3}{457.2EH} \tag{2.71}$$

Maximum stresses in car frame uprights
The maximum stresses in car frame uprights which are normally subject to compression shall be such that the quantity $[(f_a/F_a) + (f_b/F_b)]$ does not exceed unity.

2.5.3 *Gravity stopping distances*

The following formula gives the value of the stopping distance based on gravity retardation from any initial velocity.

(Imperial Units)

$$S = \frac{V^2}{19{,}320} \tag{2.72}$$

(SI Units)

$$S = \frac{V^2}{0.01963} \tag{2.73}$$

where

S = free fall (gravity stopping distance), in. (mm)
V = initial velocity, ft/min (m/s).

Stopping distances for car and counterweight safeties
The following formulas shall be used to determine the maximum and minimum stopping distances for Type B car and counterweight safeties:

(Imperial Units), ASME

$$S = \frac{V^2}{81{,}144} + 0.84 \tag{2.74}$$

$$S' = \frac{V^2}{231{,}840} \tag{2.75}$$

(SI Units), IMechE

$$S = \frac{V^2}{6.870} + 0.2560 \tag{2.76}$$

$$S' = \frac{V^2}{19.63} \tag{2.77}$$

where

S = maximum stopping distance, ft (m)
S' = minimum stopping distance, ft (m)
V = governor tripping speed, ft/min (m/s).

2.5.4 *Factors of safety for suspension wire ropes for power elevators*

2.5.4.1 *Impact on buffer supports*

Buffer reaction and impact for oil buffer supports

The following formulas give the buffer reaction and the impact of the supports of car and counterweight spring buffers which do not fully compress under the conditions.

(a) Buffer reaction

(Imperial Units)

$$R = W\left(1 + \frac{V^2}{64.4S}\right) \tag{2.78}$$

(SI Units)

$$R = W\left(9.807 + \frac{V^2}{2S}\right) \tag{2.79}$$

$$P = 2R \tag{2.80}$$

Buffer reaction and impact for spring buffer supports

The following formulas give the buffer reaction and the impact on the supports of car and counterweight spring buffers which do not fully compress under the conditions.

(a) Buffer reaction

(Imperial Units)

$$R = 2W\left(1 + \frac{v^2}{64.4S}\right) \tag{2.81}$$

(SI Units)

$$R = 2W\left(9.807 + \frac{v^2}{2S}\right) \tag{2.82}$$

(b) Impact

$$P = R \tag{2.83}$$

where

P = impact, lbf (N)
R = buffer reaction, lbf (N)
S = buffer stroke, ft (m)
v = speed at impact, ft/sec (m/s)
W = weight of car plus rated load or weight of counterweight, lb (kg).

2.6 ELEVATORS IN EMERGENCY

2.6.1 *An overview of elevator use for emergency evacuation*

Throughout most of the works, warning signs next to elevators indicate that they should not be used in fire situations. However, the idea of using elevators for fire evacuation has gained considerable attention. This paper is an overview of what has been learned from a number of research projects conducted at the U.S. National Institute of Standards and Technology (NIST) in the 1980s and 1990s concerning the use of elevators during building fires. An elevator system intended for evacuation needs to have protection from heat, flame, smoke, water, overheating of elevator machine room equipment, and loss of electrical power. In addition, such an elevator system needs to have a control approach to assure protection of people traveling in the elevator. In areas of high seismic activity, attention needs to be paid to earthquake design. Smoke protection technology for elevator evacuation systems has been developed. Water exposure due to sprinklers and fire hoses is a concern because of the effect that water can have on electrical and electronic elevator components, and tests have been conducted to determine water leakage rates and observe water leakage patterns. Further, the development of an elevator evacuation system needs to take into account human behavior so that building occupants will be willing and capable to use the system in an emergency. The computer program for elevator evacuation (ELVAC) was developed to estimate time for elevator evacuation, and ELVAC has been used to demonstrate the extent to which elevators can speed up emergency evacuation.

The events of September 11 have generated renewed interest in the use of protected elevators for egress and access. U.S. building codes contain requirements of accessible elevators for assisted evacuation of people with disabilities. Firefighter lifts, required in tall buildings in some countries, are being discussed to improve both the safety and efficiency of firefighting operations. The desire for increased egress capacity of tall buildings to facilitate simultaneous evacuation has rekindled interest in elevators as a secondary means of egress for all occupants. Elevators used for each of these purposes share many of the same design characteristics and the need for all extraordinary level of safety and reliability.

2.6.2 *Protected elevators for egress and access during fires in tall buildings*

All U.S. building codes contain a requirement for accessible elevators as a part of the accessible means of egress in any building with an accessible floor above the third floor. These requirements are all identical, being extracted from the ADA Accessibility Guidelines (ADAAG) and mandated under the Americans with Disabilities Act (ADA). It is necessary to assess initially the minimum of fire resistance or fire retardation in different countries. A comparative study of requirements is given in Table 2.8.

Each country limits **characteristics of internal surfaces** of stairways or escape routes, in terms of surface spread of flame and rate of heat emission when burning. Some also have requirements for rooms. There are more requirements for ceilings and walls than for floors. England and Wales explains that the upper surfaces of floors and stairs “do not play an important part in fire spread in the early stages of a fire that are most relevant to the safety of occupants,” but each of the other countries has requirements for floor surfaces, at least in escape routes. It is not possible to compare the specified levels of requirements, due to the different testing and classification systems. Only the Netherlands limits the rate of smoke production of surfaces. Only Denmark and England and Wales have requirements for the internal surfaces of private areas of single family housing.

All countries have some limitations on **characteristics of external surfaces** of façades, but there is considerable variation in the scope of requirements. Some distinguish different levels of requirements for parts of façades related to: the height of the façade; the height of buildings; the distance of the façade from a boundary; or the classification of the building. There are few requirements to limit the vertical spread of flame between storeys. Norway is alone in allowing reduced levels of requirements for external surfaces related to access for fire services. The Netherlands is unusual

Table 2.8. Example of the tabulation of requirements: Comparison of minimum periods of fire resistance or fire retardance, vertical load-bearing elements of structure

	Single-family house **2 storeys**	**Blocks of flats** **3 storeys**	**8 storeys**	**15 storeys**
Belgium *AR du 07-07-1994* modified by *AR du 19-12-1997*	— (no requirements for single-family dwellings)	60 (BB top floor < 10m)	60 120 in basements (BM top floor 10-25m)	120 (BE top floor > 25m)
	KEY: BB: batîments bas < 10m (low buildings); BM: batîments moyens 10-25m (medium height buildings); BE: batîments élevés > 25m (tall buildings).			
Denmark *Building Regs. for Small Dwellings BR-S 98* (1998); *Building Regs.* (1995)	BD 30 (fire retarding)	BS 60 (load-bearing structures up to top floor, with top storey floor ≤ 12m)	BS 60 (top 12m) BS 120 (load-bearing structure, storeys supporting top 12m)	
	KEY: BD: fire–retardant; BS: fire-resistant			
England and Wales *Approved Document Part B Fire Safety* (2000)	30 60 (walls separating buildings) (ground, upper storeys; with top floor ≤ 5m)	60 (ground, upper storeys; with top floor ≤ 18m)	90 (ground, upper storeys; with top floor ≤ 30m);	120 (ground, upper storeys; with top floor > 30m);
		60 (basement < 10m), 90 (basement > 10m)		
France *Arrêté du 31.1.1986*	15 (category 1)	30 (category 2)	60 (category 3)	90 (category 4)
	KEY: *Category 1:* ≤ 2 storey detached houses, semi-detached houses, terraced houses with independent structure; 1 storey terraced houses; *Category 2:* > 2 storey detached, semi-detached or terraced houses with independent structure, 2 storey terraced houses without independent structure, ≤ 4 storey blocks of flats or 5 storey if top floor in duplex accessed at 4th storey; *Category 3:* Lowest floor of highest dwelling ≤ 28m, accessible to rescue and fire fighting appliances; *Category 4:* Buildings with lowest floor of highest dwelling 28-50 m above ground; accessible to rescue and fire fighting appliances; access to protected stairs max 50m from appliance route.			
Germany Hesse *Hessische Bauordnung* (1993, amended 1994)	— (no requirements for categories A, B)	F30-A or F60-B (category E)	F90-B (category G)	more stringent requirements may be applied (buildings with storeys > 22m)
	KEY: Materials: - A: non-combustible; -B: combustible. F30, F90: fire-retardant; F90: fire-resistant. Building categories: A: detached residential building, weekend or holiday house, containing maximum 2 dwellings, usually ≤ 2 floors; B: residential building, weekend or holiday house, not class A, containing maximum 3 dwellings, ≤ 5.85m height of highest storey; C: other buildings with habitable rooms, not class A, ≤ 5.85m; D: residential building, weekend or holiday house, not class A or B, containing maximum 6 dwellings, ≤ 7m; E: Building, not class A-D, ≤ 7m; F: Building, not class A-E, ≤ 14m; G: Building, not class A-F, ≤ 22m. NB: 2002 revision does not specify periods of fire resistance and uses slightly different building classes.			
Netherlands *Bouwbesluit* 2001	30	60	90	
Norway *Guidebook to the Technical Regulations* (1997, amended 1999)	R 30 (fire class 1)	R 60 (fire class 2; including 1st basement)	R 90 (fire class 3; including 1st basement)	
	KEY: R: fire resistance for loadbearing capacity. Fire classes are based on the potential consequences of a fire, in terms of life, health, community interests and environment: fire class 1: minor consequences; fire class 2: medium consequences; fire class 3: serious consequences; fire class 4: very serious consequences			
Sweden *Boverkets Byggregler (BBR-94: 3) BFS 1993:57* (1997)	R 15 (class Br3)	R 60 (class BR1, ≤ 4 storeys; including topmost basement)	R 90 ($f \leq 200$ MJ/m^2) (class Br1; including topmost basement)	
	KEY: R: fire resistance for loadbearing capacity. f = fire load intensity. Building classes: *Class Br1:* buildings where a fire entails a high risk of injury to people (general recommendations suggest this means buildings of ≥ 3 storeys); *Class Br2:* moderate risk of injury (2-storey buildings for > 2 apartments, with habitable rooms or workrooms on the attic storey; *Class Br3:* other buildings (other dwellings).			

in differentiating between external surfaces on certain categories of escape routes and other parts of the building. Other countries do not deal with the protection of buildings *from* neighbouring buildings. Differences in classification systems and reliance on secondary sources to explain such systems, make it difficult to compare levels of requirements for characteristics of external surfaces. The analysis did not discuss limits on the size or location of unprotected areas of façades, such as windows, because there are no requirements in the Building Decree, but this is clearly a significant strategy in some countries, including Denmark, and England and Wales. Also, we were not asked to analyse the section that contains requirements for external spread via roofs.

The comparative analysis encountered relatively few requirements specific to **tall buildings**. In part, this was because the research contract did not require the analysis of requirements for fire fighting, which are likely to include provision of access for fire-fighters and fire-fighting stairs, lifts, or water supply mains in tall buildings. It also appears that very little special provision is made for tall buildings in the Netherlands: apart from 'smoke compartment' protection of stairways in buildings with a floor over 50 m, the Building Decree section on high buildings only refers to the performance requirements that apply to lower buildings. In the documentation studied, only Belgium, England and Wales, and France specified higher levels of requirements for the fire resistance of elements of structure and compartments in tall buildings, such as 15 storey blocks of flats (Table 2.8). France has consistently lower levels of requirements for fire resistance than other countries, at all heights, but it has separate legislation for building over 50 m tall, which was not analysed.

None of the fire safety regulations addressed the issue of **explosions or catastrophic collisions**, but this may be considered in requirements for structure, and a a comparative analysis should be made of provisions concerning disproportionate collapse.

Despite the independent development of fire safety regulations, there are very few instances of emphases peculiar to only one country. However, these few examples raise some interesting questions. For instance, the predominance of single family houses in England and Wales, coupled with the age of the housing stock, probably explains the inclusion of a section on attic conversions, but it isn't clear why there is no explicit mention of the issue in other countries. It may be that escape within a dwelling from a third storey room is not perceived as a particular risk, or because it is not politically acceptable to control the interiors of single-family houses, except where they affect their neighbours.

Of the countries studied, only the Netherlands controls the smoke production of internal surfaces, particularly the walls and ceilings of escape routes. Other countries do not address the limitation of smoke production but requirements to limit spread of flame would often serve the same purpose, with the use of materials of limited combustibility. The primary strategy in most countries is to keep escape routes clear of smoke, by limiting the ingress of smoke with smoke control doors and smoke ventilation. The Netherlands appears to be unique in specifying the sub-division of fire compartments into smoke compartments, but apart from specifying periods of resistance to smoke leakage between smoke compartments and enclosed rooms, details are given by reference to a national standard. It is not possible to tell from the Building Decree whether there is a significant difference between the practical implementation of its requirements for smoke compartmentation and requirements in some other countries to limit smoke leakage at doorways or for fire dampers operated by smoke detectors. In contrast to the Netherlands, Belgium only addresses the issues of fire and not smoke, to the extent that the word 'smoke' does not appear in the annexes giving the requirements.

Instead of requirements for the **fire resistance of doors** on escape routes, the Netherlands requires mains-wired smoke alarms. While this might be seen as prejudicing the success of sub-fire compartmentation and smoke compartmentation, it reflects the priority of protection of life, rather than property. Early warning should ensure that escape is complete long before a compartment would be breached.

An EEES (Emergency Elevator Evacuation System) includes the elevator equipment, hoistway, machine room, and other equipment and controls needed for safe operation of the elevator during the evacuation process. Because people must be protected from fire and smoke while they wait for an elevator, the system must include protected elevator lobbies. Such protected elevator lobbies also help to prevent the fire from activating elevator buttons so that elevator cars are prevented from being called by the fire to the fire floor.

An EEES must have protection from heat, flame, smoke, water, overheating of elevator machine room equipment, and loss of electrical power. In addition, an EEES must have a control approach that assures protection of the people traveling in the elevator. In areas of high seismic activity, attention must be paid to earthquake design. Further, the development of an EEES needs to take into account human behavior so that building occupants will be willing and capable to operate the system in an emergency. The following sections address these issues.

The concern about people crowding into an elevator and doors not closing is significant only when there are enough people to form a crowd. Some EEES might only be intended for use by a small number of people. Examples of such low use EEESs are (1) a system intended only for use by a few persons with mobility limitations, and (2) a system at an air traffic control tower (ATCT). A small number of people is taken to be a number that will not result in crowding that could force elevator doors to remain open and prevent motion of the car. For other applications, the conventional methods of people movement are to be adopted.

2.6.2.1 *EEES Protection*

(a) Heat and Flame

Compartmentation is one of the oldest methods of fire protection and has been extensively used to limit the spread of fire. Compartmentation is also one approach to smoke protection, and this is addressed in the next section.

Buildings are divided into compartments formed by fire barriers. These barriers are walls, partitions and floor-ceiling assemblies that have a level of fire resistance. The traditional approach to evaluate fire resistance is to subject a section of a barrier to a standard fire in a standard furnace. Each building fire is unique in duration and temperature, and it is not surprising that the performance of barriers in building fires differs to some extent from the performance in standard tests. Historically, the goal of fire resistant construction was property protection, but the goals of current codes include life safety. The building codes require specific levels of fire resistance for specific applications with the goal of protecting life.

(b) Smoke

The mechanisms that can be used to provide smoke protection are air flow, buoyancy, compartmentation, dilution and pressurization.

Because of the concern about supplying oxygen to the fire as discussed by Klote and Milke, air flow is not recommended for smoke protection of EEESs. Buoyancy is primarily used to manage smoke in large spaces such as atria and shopping malls. Systems that rely on buoyancy are inappropriate for smoke protection of EEESs.

Pressurization Systems: Systems relying on compartmentation with pressurization are designed on the basis of no smoke leakage into protected spaces. Accordingly, analysis of such pressurization systems is less complex than that of systems using compartmentation alone or compartmentation with dilution. Acceptance testing and routine testing of pressurization systems is done by measurement of the pressure difference produced when the system is operating. Such testing provides a level of assurance about system performance during a fire. For systems that have windows breaking, windows opening, or doors opening to the outside; smoke control systems by pressurization as discussed later can maintain pressurization during such pressure fluctuations. Considering the potential for windows to break during unsprinklered fires, pressurization systems are recommended for smoke protection of EEESs in unsprinklered buildings.

(c) Hardened Elevators

In conventional buildings it is possible to make elevators more resistant to the environment by hardening elevators for emergency operation.

Such elevators can be hardened for:

Smoke

- A 2-hour rated barrier for the hoistway
- Mildly pressurized hoistways in an emergency situation
- Fire protected elevator lobbies.

Water

The two areas of concern are the door and pit switches.

- Water in the hoistway. This amounts to managing water flow in the vicinity of the hoistway doors.
- Use of waterproof switches in the hoistway. This will require a code change for the door circuits.

Power

This is the most problematic and costly element to secure. All building of concern have emergency power systems. The problem is that in many installations the power is located at the building base, the elevator controllers of concern (and the machine) are located higher up in the building.

Power management and redundancy may be accomplished via a variety of methods.

- Multiple separated feeds for main power
- Emergency generators.

Areas that need to be considered

- Power run up the hoistway
- Battery power in the machine room to provide full operation for a period of time
- Battery operation to attain the next serviceable landing.

The battery operation could be restricted to designated elevators only, in a group providing further robustness to a "firefighters" lift. Significant work has been done on compact, high-energy density batteries, which could be utilized for emergency power to several elevators.

(d) Availability of Elevators

One of the areas requiring special attention is the time from the emergency occurring and firefighter response. A number of elevators could remain in public use while others are released on Phase I Firefighters Service. The period of time immediately following the initiation of a fire will provide the best opportunity for safe elevator operation. As time passes, the more likely a fire will breach the hoistways or machine rooms.

If the condition of any of the elevators, the building structural interfaces to the elevator, the power supply system and other relevant building systems, as well as the environment is monitored by dedicated sensors, the information can be used to determine whether the elevator is safe for use, following the activities of a fire alarm or other emergency sensor. The elevator could be cycled once with the doors closed to ensure that it is safe for operation. The information could be communicated to the building occupants using audio-visual indication, provided that a reliable system could be provided. The elevators could be programmed to serve the emergency floors if safe to do so or, if not, to floors in close proximity. The audio-visual system could advise building occupants where to assemble in order to access the elevators. Such a plan would be more effective if trained "floor captains" were available on each floor to help direct, reassure, and organize people.

(e) World Trade Center Response

The recent tragedy of the World Trade Center does point out some facts that must be considered in relation to the present emergency response functionality of elevators. These facts must also be assessed along with the desire to change the use of elevators for evacuation from large structures in light of the World Trade Center Towers collapse.

a) About 90% of the occupants evacuated from the World Trade Center Towers. This represents the majority of occupants who were below the impact floors. Most of the people on or above the impact floors perished in the collapse, due to compromised stairwells. The elevators to the upper floors (and the mid rise in one tower) were rendered totally inoperative due to the aircraft impacts. The hoistways were dramatically breached, and indeed no degree of elevator functionality changes would have altered the situation.
b) The evacuation process of the occupants was orderly and compassionate, (based on participant accounts); panic and violence were not evident. Many accounts emerged about people helping those with disabilities down the stairwells. In fact this process was only slowed by the presence of smoke and the fact that scores of emergency personnel were also using the stairs to ascend the World Trade Center Towers.
c) Consistent with local practice, the emergency personnel used the stairs to get to the fires. This amounted to climbing 60 flights, in full fire gear carrying all required equipment. Elevators that were in operational states sat idle in the lobbies.

Conclusions that can be drawn from these facts:

i) The stairwells provided egress from the structures for those occupants below the impact floors, despite the fact that smoke did finally engulf the stairwells. Added to this evacuation, hundreds of firefighters were climbing up the stairs at the same time.
ii) The firefighters were trained not to use the elevators in an emergency, and their practice is not to use them even for equipment transportation up a building. This fact demonstrates the misalignment between code required elevator function in an emergency and the emergency response procedures for such structures.

The fact that New York, one of the worlds premier high-rise cities, does not include the elevators in the response procedures; and that different cities respond with different procedures; demonstrates the point that unresolved issues exist between the current building system operations and emergency personnel.

Probably the largest issue is the fact that an emergency worker has no way of knowing how long the elevator will remain operational. The elevator system is not configured to predict this, nor can the Fire and Life Safety (F & LS) control system predict when a fire is about to put the elevator in jeopardy. The entire extent of support afforded to the emergency personnel is typically voice broadcast contact on walkie-talkies between themselves. These voice systems can prove to be a frustrating method in a dangerous, ever-changing emergency situation.

It is clear that a safer approach of providing information to emergency personnel is needed.

2.6.3 *Conclusions*

Elevator use in emergency situations can make a significant time saving contribution to travel towards the fire for the fire service and the evacuation of the occupants in the building. The calculations done for the firefighter case study showed that firefighters traveled to the fire floor (15 to 30) min faster via elevators when compared to stair access. The stair travel calculation, using two different estimates for the firefighter walking speeds, resulted in a range of travel time values differing by a factor of two. Research is needed in the area of firefighter movement to assess which travel times within the calculated range (17 to 34 min) are more accurate.

Also, the evacuation time of occupants using a combination of stair calculations and ELVAC calculations for the elevators shows improvement over stair or elevator movement alone for the GSA examples studied. This is especially true for the taller building with multi-rise elevators. With these calculations, assumptions were made that the occupants were waiting at the elevator lobbies and staircases as soon as evacuation began. Also, the occupants were assumed to use only the stairs or the elevators during their descent, unlike the evacuation plan of the Eureka Place Tower, in which a resident could use a combination of the two during egress.

Lastly, there is a need for a complete simulation package that includes movement of the occupants on stairs, elevator movement of the cars and occupants, environmental conditions in the building due to the fire, the contribution of the building to fire and egress, and human behavior and movement during the entire evacuation. Currently, there are evacuation models that focus on all of these aspects except elevator usage, and elevator models that neglect these aspects of building evacuation except for elevator usage. Unfortunately, much data is lacking about the behavior of occupants using elevators during an emergency, which needs to be addressed.

Overall, elevators lessen the travel time of firefighters and occupants to their prospective destinations, if used properly and with an appropriate emergency plan. There are many obstacles which need to be met in order for these plans to work properly. Recently, there has been an awakening to the importance of research in these areas for eventual use in buildings all over the world.

REFERENCES

Comparison of worldwide lift (elevator) safety standards – Firefighters lifts (elevators), ISO/TR 16765: 2002(E), International Organization for Standardization, Geneva, Switzerland, 2002.

Fire Precautions in the Design, Construction, and Use of Buildings, BS 5588 Park 5 1991, Code of Practice for Firefighting Lifts and Stairs, BSI, London.

Safety Code for Elevators and Escalators, ASME A17.1-2000, Amer Soc Mech Eng, NY, 2000.

Klaene, B. and Sanders, R. Firefighters' Use of Elevators, Using elevators during a fire requires establishing specific SOPs, *NFPA Journal*, Vol. 95, No. 4, July/August 2001.

Phoenix Fire Department Standard Operating Procedures, http://phoenix.gov/FIRE/20205.html.

Verbal/Email Communication: Michael Scianna, Chicago Fire Department. October 2002.

Klote, J.H. (1993), A Method of Calculation of Elevator Evacuation Time, National Institute of Standards and Technology, Gaithersburg, MD, *Journal of Fire Protection Engineering*, 5(3), pp. 83–95, 1993.

Klote, J.H., Alvord, D.M., Levin, B.M., and Groner, N.E. Feasibility and Design Considerations of Emergency Evacuation by Elevators, National Institute of Standards and Technology, Gaithersburg, MD, NISTIR 4870, 1992.

Klote, J.H. and Alvord, D.M. (1992), Routine for Analysis of the People Movement Time for Elevator Evacuation, National Institute of Standards and Technology, Gaithersburg, MD, NISTIR 4730, 1992

Klote, J.H., Deal, S.P., Donoghue, E.A., Levin, B.M., and Groner, N.E. (1993), Fire Evacuation By Elevators, Elevator World, June 1993.

Klote, J.H., Levin, B.M., and Groner, N.E. (1995), Emergency Elevator Evacuation Systems, *Proceedings of the 2nd Symposium on Elevators, Fire, and Accessibility*, *Baltimore*, MD, April, 1995.

Aloi, S. and Rogers, J. (2002), Reach for the Sky, *Fire Prevention & Fire Engineers Journal*, Vol. 62, No. 219, FPA London, April 2002.

Levin, B.M, and Groner, N.E. (1995), Some Control and Communication Considerations in Designing an Emergency Elevator Evacuation System, *Proceedings of the 2nd Symposium on Elevators, Fire, and Accessibility*, Baltimore, MD, April, 1995.

Groner, N.E. (1995), Selecting Strategies for Elevator Evacuations, *Proceedings of the 2nd Symposium on Elevators, Fire, and Accessibility*, Baltimore, MD, April, 1995.

Groner, N.E. and Levin, B.M. (1992), Human Factors Considerations in the Potential for Using Elevators in Building Emergency Evacuation Plans, George Mason University, Washington, DC, July 1992.

Strakosch, G.R. The Vertical Transportation Handbook Third Edition, John Wiley & Sons, Inc., New York, USA, 1998.

Frantzich, H. Study of Movement on Stairs During Evacuation Using Video Analysis Techniques, Department of Fire Safety Engineering, Lund Institute of Technology, Lund University, March 1996.

Fruin, J.J. Pedestrian Planning and Design, Revised Edition, Elevator World, Inc. Mobile, Alabama, 1987.

Predtechenskii, V.M. and Milinskii, A.I. (1978), Planning for Foot Traffic Flow in Buildings, Amerind Publishing Co. Pvt. Ltd., New Delhi, 1978.

Nelson, H.E. and Mowrer, F.W. Section 3, Chapter 14 Emergency Movement, The SFPE Handbook of Fire Protection Engineering, Third Edition, National Fire Protection Association, Quincy, MA., 2002.

Nelson, H.E. and MacLennan, H.A. Section 3, Chapter 14 Emergency Movement, The SFPE Handbook of Fire Protection Engineering, Second Edition, National Fire Protection Association, Quincy, MA., 1995.

Caporale, R.S., Elevate Traffic Analysis Software (Eliminating the Guesswork), ELEVATE website: http://www.peters-research.com/elevators/Elevate/Papers/EW%20review/engin.pdf

Verbal/Email communication: Roger Howkins, ELEVATE; Richard Peters, Peters Research, UK. August 2002.
Siikonen, M.-L., Susi, T., and Hakonen, H. (2001) Passenger Traffic Flow Simulation in Tall Buildings, Elevator World, Inc., August 2001.
Email communication: Marja-Liisa Siikonen, Kone Elevators, Finland. August, November 2002.
Bryan, J.L. (1977), Smoke as a Determinant of Human Behavior in Fire Situations (Project People). Final Report, University of Maryland, College Park, MD, National Bureau of Standards, Gaithersburg, MD, NBS GCR 77–94; 304 p. June 30, 1977.
Wood, P.G., Chapter 6 A Survey of Behaviour in Fires, Fires and Human Behaviour, Canter (ed.), John Wiley & Sons, Ltd., New York, 1980.
Quarantelli, E.L., Panic Behavior in Fire Situations: Findings and a Model From the English Language Research Literature, Proceedings from the UJNR Panel on Fire Research and Safety, 4th Joint Panel Meeting, February 5–9, 1979, Tokyo, Japan, 405–428 pp. 1975.
Jin, T., Studies on Human Behavior and Tenability in Fire Smoke, Fire Safety Science – Proceedings of the Fifth International Symposium, International Association for Fire Safety Science, 3–21 pp. 1997.
Averill, J.D., Performance-Based Codes: Economics, Documentation, and Design, National Institute of Standards and Technology, Gaithersburg, MD, NIST-GCR-98-752, 1998.

3

Design specifications for escalators, moving walkways or travelators

3.1 INTRODUCTION TO ESCALATORS

Escalator is a coined word, meaning stairs that can move. Although it is a registered trade mark of OTIS ELEVATOR company, it has now become generic. They are designed to withstand the most arduous traffic usage. Many manufacturers have standardised their products, their speeds and traffic handling capacity. They are fast enough to provide rapid travel from one level to another without sacrificing the human leasure. A number of design standards exist on general specifications, design components, manufacture techniques and operational criteria. For European countries The European Standard EN 115:1995 is in the fore front on this subject. Unless and until some changes are advised on specific projects, the manufacturers are happy to see a preliminary data on escalators given below:

(i)	Escalator type: Remote or compact		
		Compact	*Remote*
(ii)	Speed	0.6 m/s to 0.75 m/s	0.6 m/s to 0.75 m/s
(iii)	Load cycle	2 h–3.5 h 100% 4 h–2 h 75%–0% 16 h 50%	8 h 100% 12 h 60%
(iv)	Design load	1200 N/per step	500 N/per step
(v)	Max. truss Deflection	L/1000	L/1500
(vi)	Step type	cast aluminium	steel fabricated
(vii)	Min. Chain Wheel (mm)	100dia × 25wide	110dia × 25wide
	Min. Step Wheel (mm)	75dia × 25wide 75dia × 20wide	75dia × 20wide
(viii)	Balustrade Material	stainless steel	aluminium
(ix)	Both are remote		monitoring

Plates (3.1) to (3.9) show the products of major manufacturers in the escalators field, namely OTIS, Fujitec, KONE and Schindler Companies.

Vertical glass balustrade

Escalator
(With compliments: OTIS CO, London)

Plate 3.1. Typical view of the escalator (vertical glass balustrade).

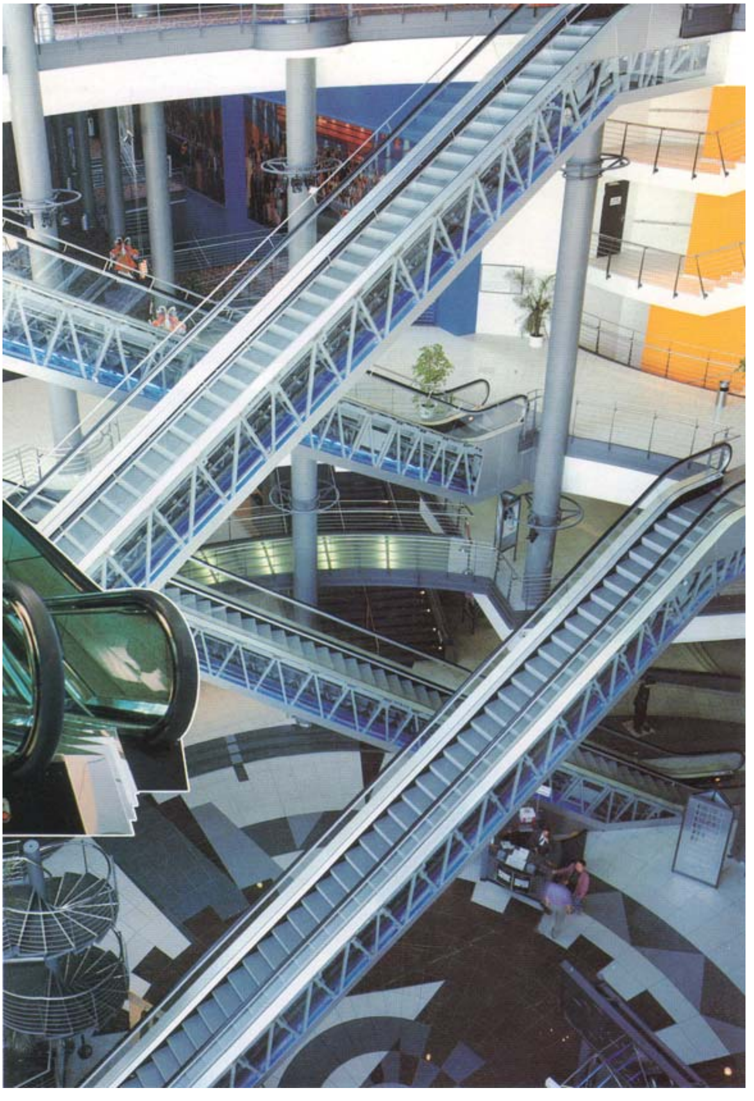

Plate 3.2. A pictoral view or multiple escalators (with supporting trusses and columns).

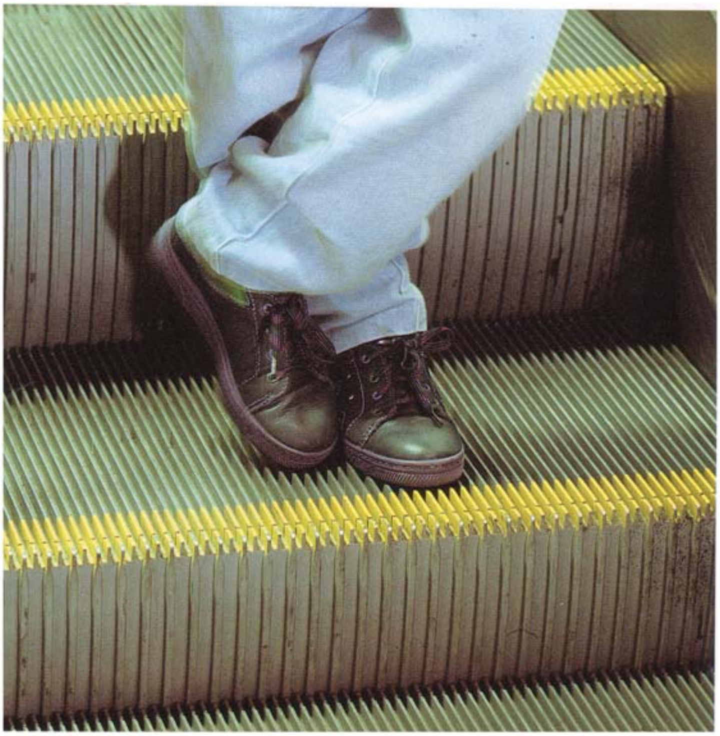

(With compliments: OTIS CO. London)

Plate 3.3. Stainless steel steps with sloped opaque balustrade.

Otis 513 NPE-XL

Manufactured according to Code EN 115.
All details according to the Technical Layout GAA 28300 F.
For special conditions such as extended free span, exterior cladding of more than 200 N/m², wind or earthquake applications please contact IPC-Stadthagen.

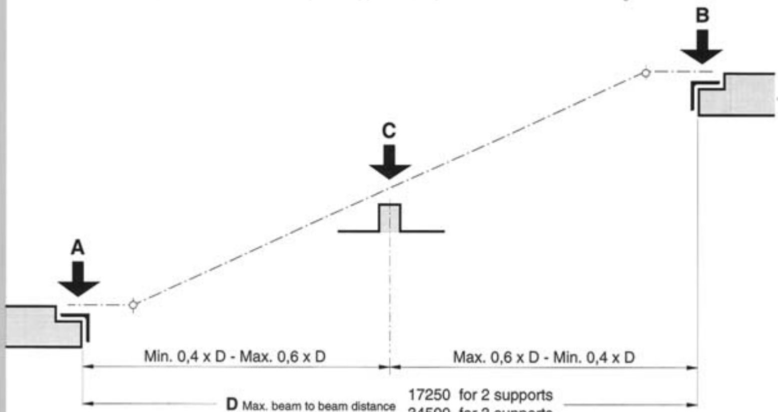

Escalator

27,3°/30°

Machine inside truss

Step width: 800/1000 mm

Single machine	Reaction to support in kN (D in m) ②					
Step width N	800			1000		
No. of supports	A	B	C	A	B	C
2	5,07 x D + 6,29	5,07 x D + 12,49	-	5,72 x D + 6,62	5,72 x D + 12,94	-
3	2,02 x D + 4,74	2,02 x D + 11,24	6,33 x D + 2,81	2,30 x D + 5,03	2,30 x D + 11,65	7,16 x D + 2,88

Dual drive	Reaction to support in kN (D in m) ②					
Step width N	800			1000		
No. of supports	A	B	C	A	B	C
2	-	-	-	5,72 x D + 7,41	5,72 x D + 20,05	-
3	-	-	-	2,30 x D + 5,03	2,30 x D + 18,36	7,16 x D + 4,07

② For passenger load of 5000 N/m² according to Code EN 115

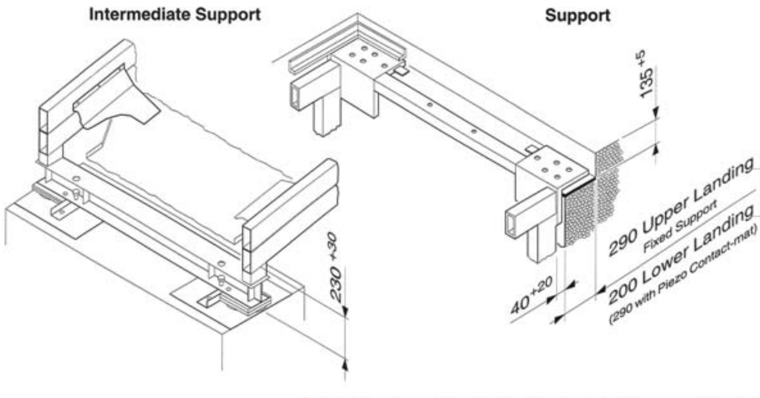

OTIS

OTIS reserves the right to change any part of this specification without previous notice.

Plate 3.4(a). Machine inside trusses.

Otis 513 NPE-XL

Escalator

27,3°/30°

Machine inside truss

Step width: 800/1000 mm

Truss extension for Microprocessor Controller inside truss or Programmable Logic Controller outside truss

Power (kW) \ Voltage (V)	480/480	440	400/415	380	350	220	200/208
7,5							
11,7							
16,0				μP-1			
18,6						μP-2	
24,0	with continuous mode μP-1 with intermittent mode μP-2						

Controller		Step width	Transmission: Chain, Auxiliary brake type: Hydraulic	Chain, Calliper	Chain, Wedge	Gear, W/O
Microprocessor Controller (μP-1/2)	Single Drive	1000	n.a.	-*	-	-
		800	n.a.	200*	-	500
		1000	n.a.	-*	-	400
		800	n.a.	400*	400	500
Programmable Logic Controller (PLC)	Drive: Dual	1000	500 **	500 **	500 **	n.a.
	Drive: Duplex	800	n.a.	n.a.	n.a.	500
	Drive: Single	1000	-	-	-	-
		800	200*	200*	200*	400*

Truss extension in mm

* Please contact IPC Stadthagen n.a. = not available

** Already included in dimensions X and G for dual drive.

Duty table

Machine EC 203 380 - 400 V IEC 38					Escalator rise			
Current			Power	Speed	Inclination 27,3°		Inclination 30°	
Nominal	Starting Star	Starting Delta			Step width 800	Step width 1000	Step width 800	Step width 1000
(A)	(A)	(A)	(kW)	(m/s)	Rise (m)	Rise (m)	Rise (m)	Rise (m)
16,5	45	138	7,5	0,50	5,4	4,2	5,5	4,3
				0,65	4,0	3,1	4,0	3,2
				0,75	3,3	2,6	3,4	2,7
23	48	148	11,7	0,50	8,8	6,9	9,0	7,1
				0,65	6,6	5,2	6,8	5,3
				0,75	5,6	4,4	5,6	4,5
27	61	203	15,0	0,50	11,5	9,0	11,8	9,2
				0,65	8,7	6,8	8,9	6,9
				0,75	7,4	5,8	7,6	5,9
33	66	220	18,6	0,50	13,0	11,4	13,0	11,6
				0,65	11,0	8,6	11,2	8,8
				0,75	9,4	7,4	9,2	7,5
43	80	267	24,0	0,50	-	13,0	-	13,0
				0,65	13,0	11,3	13,0	11,5
				0,75	12,4	9,7	12,6	9,9
54	122	406	2 x 15,0	0,50	-	-	-	-
				0,65	-	13,0	-	13,0
				0,75	13,0	12,3	13,0	12,5
66	132	440	2 x 18,6	0,50	-	-	-	-
				0,65	-	-	-	-
				0,75	-	13,0	-	13,0

Duty table for installations up to 1000 m altitude above sea level (NN)

OTIS

Plate 3.4(b).

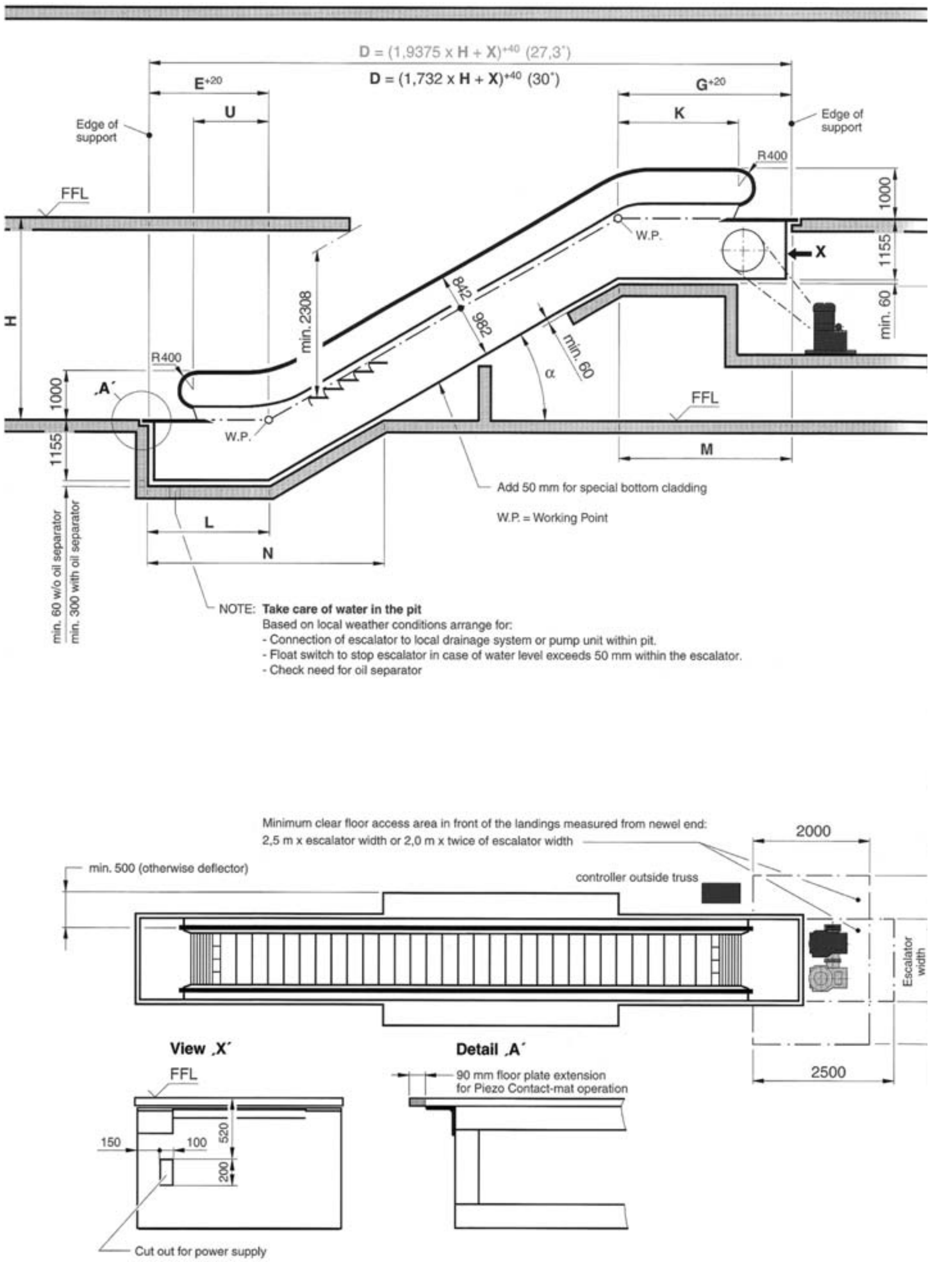

Plate 3.4(c). Machine outside the truss.

Otis 513 NPE-XL

Escalator

27,3°/30°

Machine inside truss

Step width:
800/1000 mm

Manufactured according to Code EN 115.
All details according to the Technical Layout GAA 28300 F.
For special conditions such as extended free span, exterior cladding of more than 200 N/m², wind or earthquake applications please contact IPC-Stadthagen.

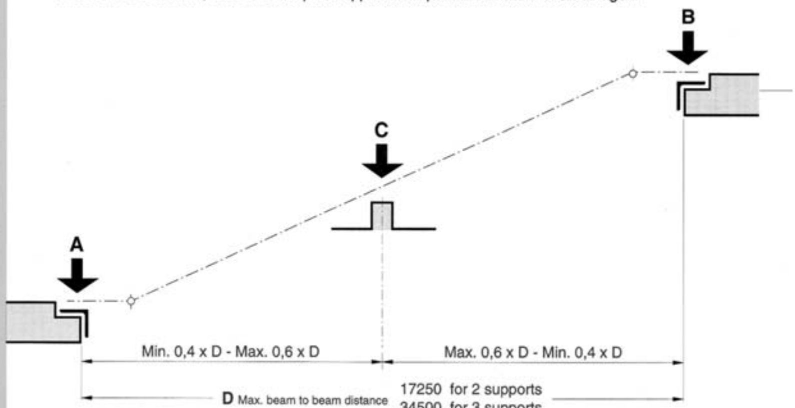

Single machine — Reaction to support in kN (D in m) ②

Step width N	800			1000		
No. of supports	A	B	C	A	B	C
2	5,07 x D + 6,29	5,07 x D + 12,49	-	5,72 x D + 6,62	5,72 x D + 12,94	-
3	2,02 x D + 4,74	2,02 x D + 11,24	6,33 x D + 2,81	2,30 x D + 5,03	2,30 x D + 11,65	7,16 x D + 2,88

Dual drive — Reaction to support in kN (D in m) ②

Step width N	800			1000		
No. of supports	A	B	C	A	B	C
2	-	-	-	5,72 x D + 7,41	5,72 x D + 20,05	-
3	-	-	-	2,30 x D + 5,03	2,30 x D + 18,36	7,16 x D + 4,07

② For passenger load of 5000 N/m² according to Code EN 115

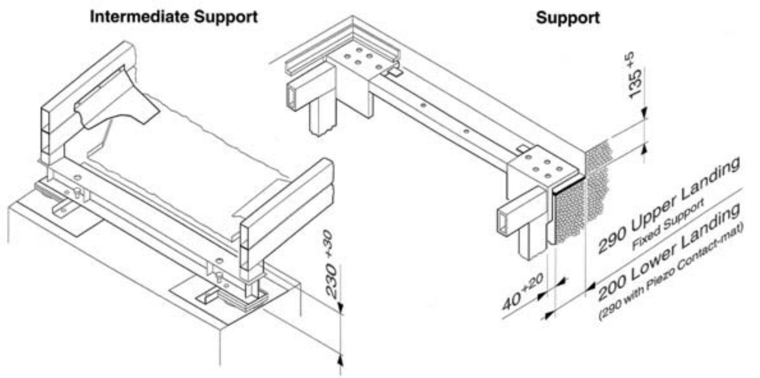

Form 26 - 5541 - 00 (97.05)

OTIS

OTIS reserves the right to change any part of this specification without previous notice.

Plate 3.4(d). Machine inside trusses.

Otis 513 NPE-XL

Escalator

27,3°/30°

Machine inside truss

Step width: 800/1000 mm

Sloped opaque balustrade

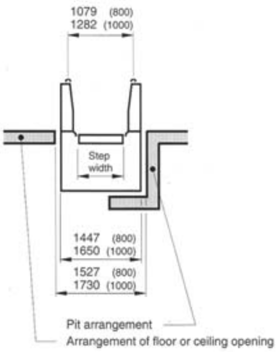

2 x Escalator width

Single machine			Dimensions in mm							
α	Step width	Flat Steps	X ①	E	G ①	U	K	L	N	M
27,3°	800/1000	3	6366	2836	3530	1974	2537	2754	5108	3612
		4	7166	3236	3930	2374	2937	3154	5508	4012
30°	800/1000	3	6506	2879	3627	2017	2634	2859	4963	3647
		4	7306	3279	4027	2417	3034	3259	5363	4047

Dual drive			Dimensions in mm							
α	Step width	Flat Steps	X ①	E	G ①	U	K	L	N	M
27,3°	800/1000	3	6866	2836	4030	1974	2537	2754	5108	4112
		4	7666	3236	4430	2374	2937	3154	5508	4512
30°	800/1000	3	7006	2879	4127	2017	2634	2859	4963	4147
		4	7806	3279	4527	2417	3034	3259	5363	4547

① Please refer to table „Truss extension" on the front page.

NOTE: It is strongly recommended to cover the escalator against weather conditions by at least means of a canopy to increase both comfort of passengers and reliability and lifetime of the escalator.

OTIS

Plate 3.4(d). (*Continued*).

CATALOGUE LAYOUT

Machine outside truss

Otis 513 NPE

Sloped opaque balustrade

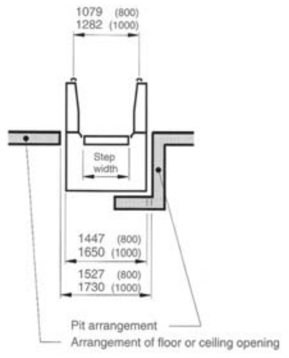

2 x Escalator width

Otis 513 NPE-L			Dimensions in mm							
α	Step width	Flat Steps	X	E	G	U	K	L	N	M
27,3°	800/1000	3	6141	2836	3305	1974	2312	2754	5108	3137
		4	6941	3236	3705	2374	2712	3154	5508	3537
30°	800/1000	3	6256	2879	3377	2017	2884	2859	4963	3147
		4	7056	3279	3777	2417	2784	3259	5363	3547

Otis 513 NPE-XL			Dimensions in mm							
α	Step width	Flat Steps	X	E	G	U	K	L	N	M
27,3°	800/1000	3	6366	2836	3530	1974	2537	2754	5110	3362
		4	7166	3236	3930	2374	2937	3154	5510	3762
30°	800/1000	3	6506	2879	3627	2017	2634	2859	4963	3397
		4	7306	3279	4027	2417	3034	3259	5363	3797

Otis 513 NPE-S			Dimensions in mm							
α	Step width	Flat Steps	X	E	G	U	K	L	N	M
27,3°	800/1000	2	4918	2247	2671	1385	1678	2165	4519	2503
		3	5718	2647	3071	1785	2078	2565	4919	2903
30°	800/1000	2	4985	2269	2716	1407	1723	2249	4353	2486
		3	5785	2669	3116	1807	2123	2649	4753	2886

NOTE: It is strongly recommended to cover the escalator against weather conditions by at least means of a canopy to increase both comfort of passengers and reliability and lifetime of the escalator.

Escalator

27,3°/30°

Machine outside truss

Step width:
800/1000 mm

OTIS

Plate 3.4(d). (*Continued*).

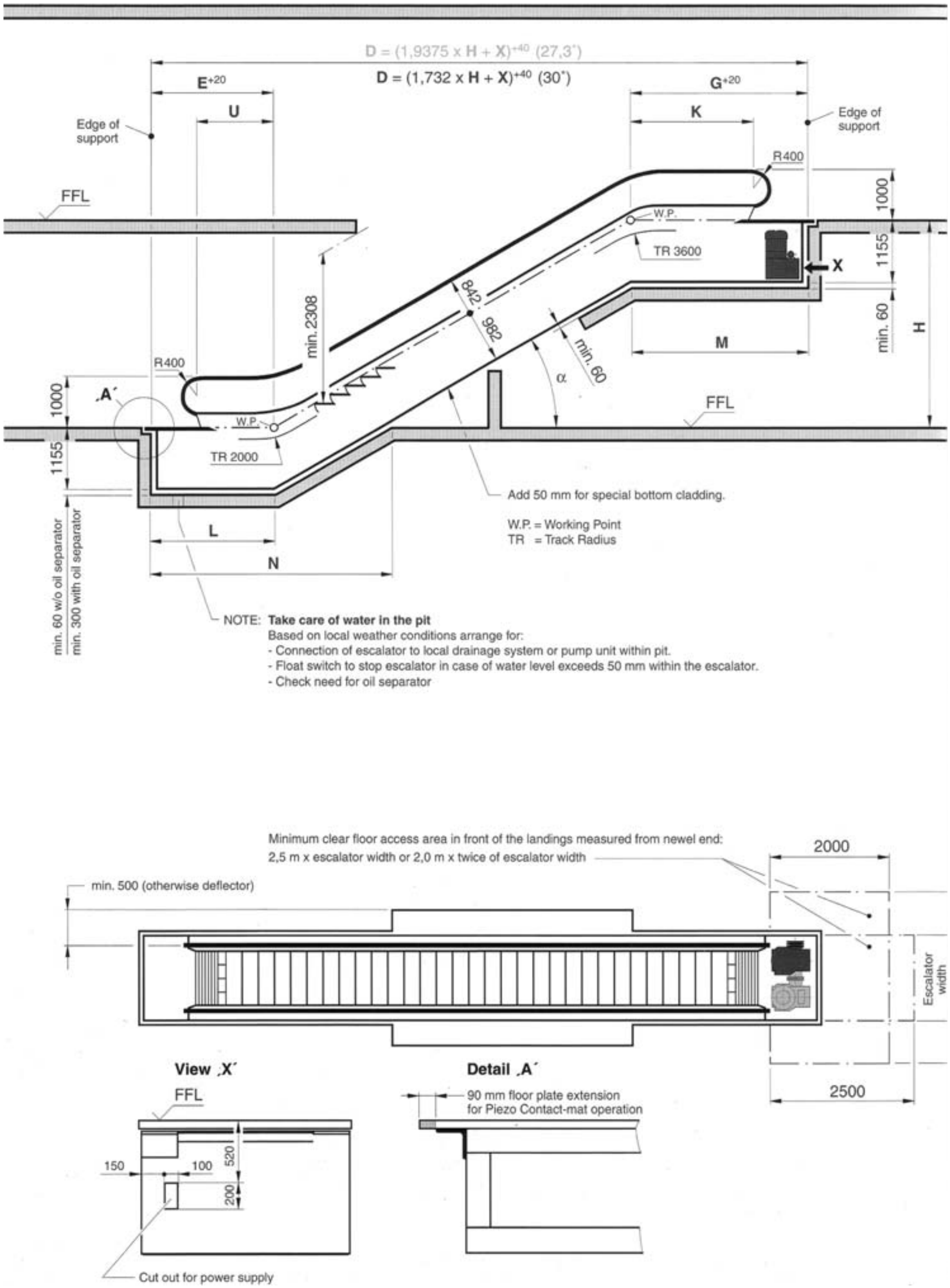

Plate 3.4(e). Escalator layout and machine inside the truss.

CATALOGUE LAYOUT

Machine outside truss

Otis 513 NPE

Duty table

Machine EC 203 380 - 400 V IEC 38					Escalator rise			
					Inclination 27,3°		Inclination 30°	
Current			Power	Speed	Step width		Step width	
Nominal	Starting Star	Starting Delta			800	1000	800	1000
(A)	(A)	(A)	(kW)	(m/s)	Rise (m)	Rise (m)	Rise (m)	Rise (m)
16,5	45	138	7,5	0,50	5,4	4,2	5,5	4,3
				0,65	4,0	3,1	4,0	3,2
				0,75	3,3	2,6	3,4	2,7
23	48	148	11,7	0,50	8,8	6,9	9,0	7,1
				0,65	6,6	5,2	6,8	5,3
				0,75	5,6	4,4	5,6	4,5
27	61	203	15,0	0,50	11,5	9,0	11,8	9,2
				0,65	8,7	6,8	8,9	6,9
				0,75	7,4	5,8	7,6	5,9
33	66	220	18,6	0,50	13,0	11,4	13,0	11,6
				0,65	11,0	8,6	11,2	8,8
				0,75	9,4	7,4	9,2	7,5
43	80	267	24,0	0,50	-	13,0	-	13,0
				0,65	13,0	11,3	13,0	11,5
				0,75	12,4	9,7	12,6	9,9
54	122	406	2 x 15,0	0,50	-	-	-	-
				0,65	-	13,0	-	13,0
				0,75	13,0	12,3	13,0	12,5
66	132	440	2 x 18,6	0,50	-	-	-	-
				0,65	-	-	-	-
				0,75	-	13,0	-	13,0

Duty table for installations up to 1000 m altitude above sea level (NN)

Escalator

27,3°/30°

Machine outside truss

Step width: 800/1000 mm

OTIS

Plate 3.4(e). (*Continued*).

RISE 6,001 - 6,5 m
3 flat steps

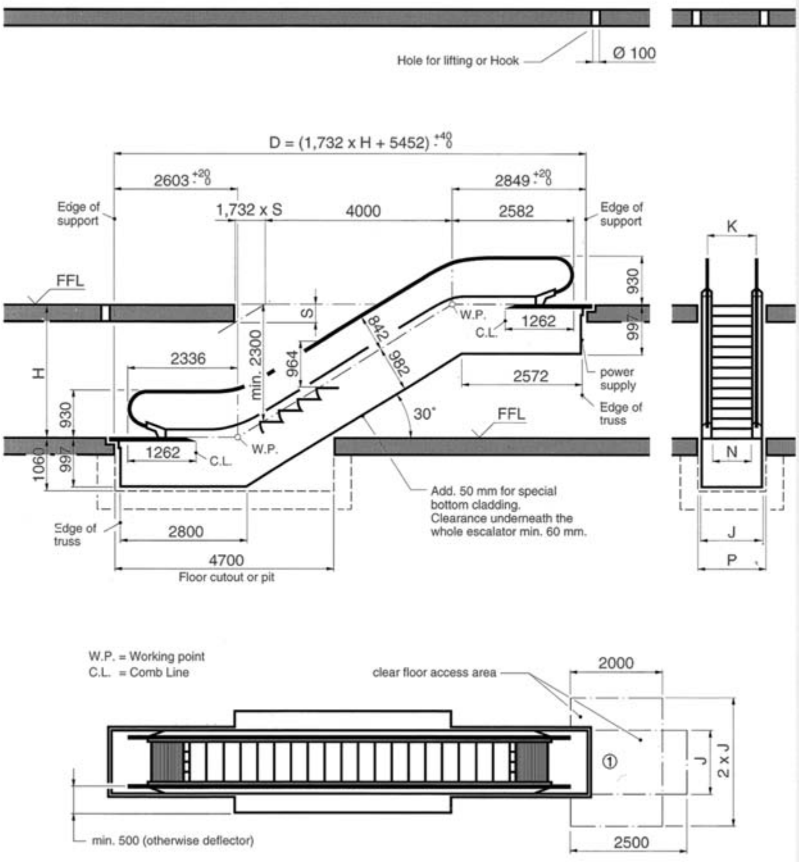

Dimensions in mm for 3 flat steps			
Step width N	**K**	**J**	**P**
800	1005	1347	1430
1000	1208	1550	1630

① Minimum clear floor access area in front of the landings measured from newel end: 2,5 m x escalator width or 2,0 m x twice escalator width.

Otis 506 NCE

Escalator

30°

0,5 m/s

Step width:
800/1000 mm

Rise:
6,001 - 6,5 m

OTIS

Plate 3.4(f).

Otis 506 NCE

Escalator

30°

0,5 m/s

Step width:
800/1000 mm

Rise:
6,001 - 6,5 m

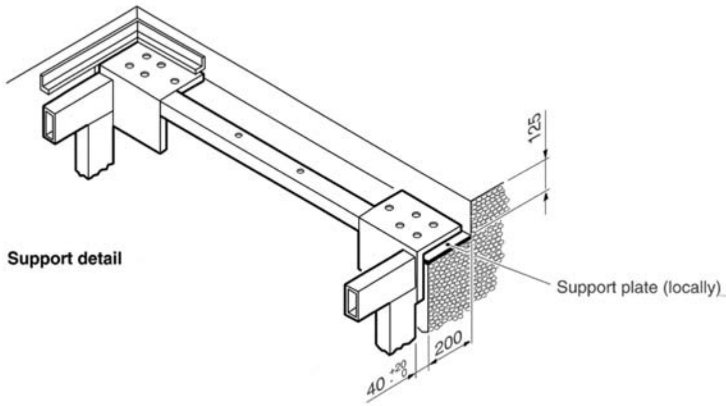

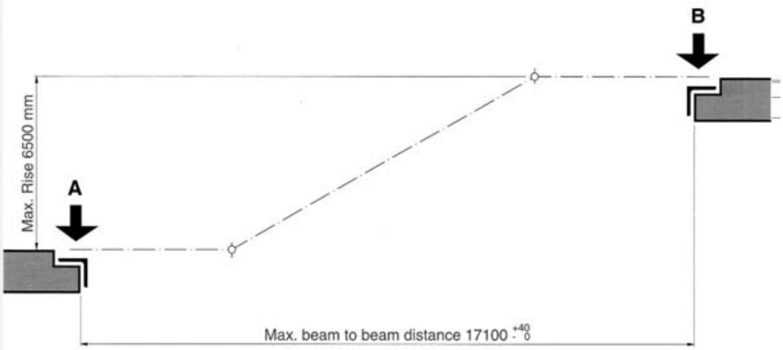

Reaction to support in kN (D in m) ②		
Step width N	**A**	**B**
800	4,2 x D + 2,0	4,2 x D + 7,5
1000	4,85 x D + 2,0	4,85 x D + 7,5

② For passenger load of 5000 N/m² according to Code EN 115.

Manufactured according to Code En 115.
All data is in accordance with the Technical Layout GAA 28300 B.
For special conditions such as extended free span, exterior cladding of more than 200 N/m² or earthquake loads please contact IPC-Stadthagen.

OTIS reserves the right to change any part of this specification without previous notice.

OTIS

Plate 3.4(g).

Otis 506 NCE

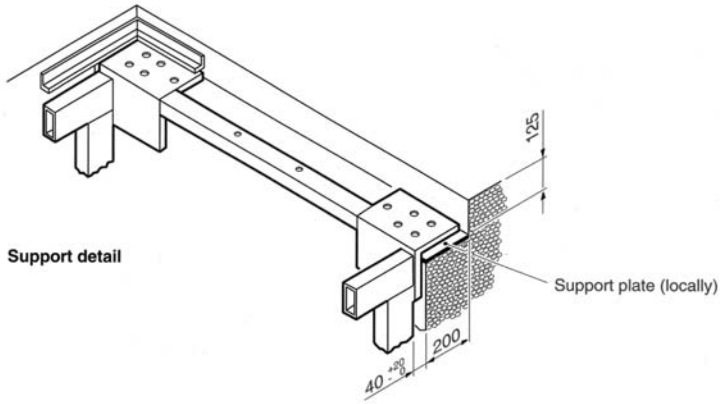

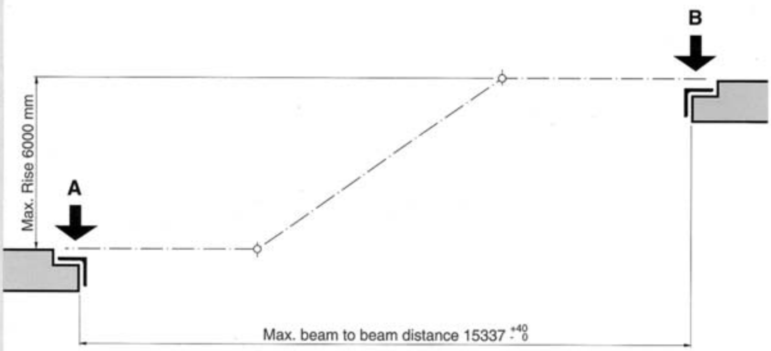

Escalator

35°

0,5 m/s

Step width:
800/1000 mm

Rise:
max. 6,0 m

Reaction to support in kN (D in m) ②		
Step width N	**A**	**B**
800	4,2 x D + 2,3	4,2 x D + 7,0
1000	4,9 x D + 2,3	4,9 x D + 7,0

② For passenger load of 5000 N/m² according to Code EN 115.

Manufactured according to Code EN115.
All data is in accordance with the Technical Layout GAA 28300 C.
For special conditions such as axtended free span, exterior cladding of more than 200 N/m² or earthquake loads please contact IPC-Stadthagen.

OTIS reserves the right to change any part of this specification without previous notice.

OTIS

Plate 3.4(h).

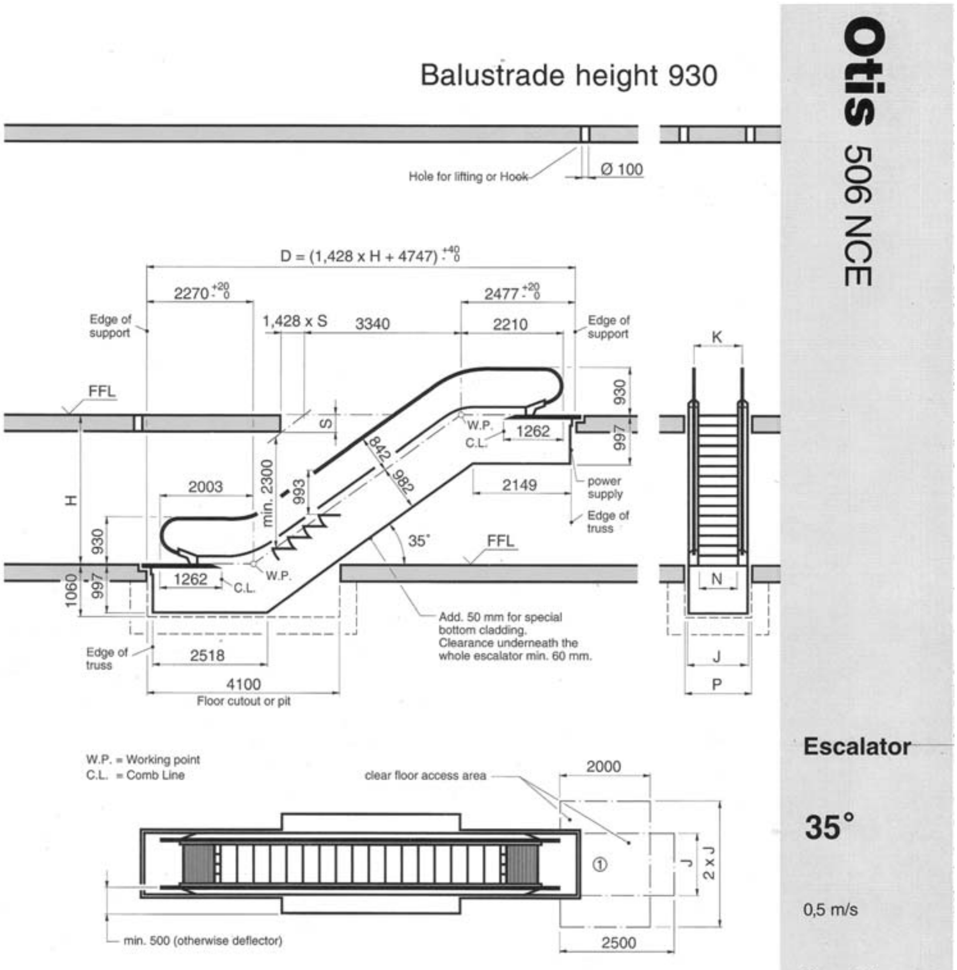

Dimensions in mm for 2 flat steps			
Step width N	**K**	**J**	**P**
800	1005	1347	1430
1000	1208	1550	1630

① Minimum clear floor access area in front of the landings measured from newel end: 2,5 m x escalator width or 2,0 m x twice escalator width.

Plate 3.4(i).

Layout of Escalator Panel Type 30

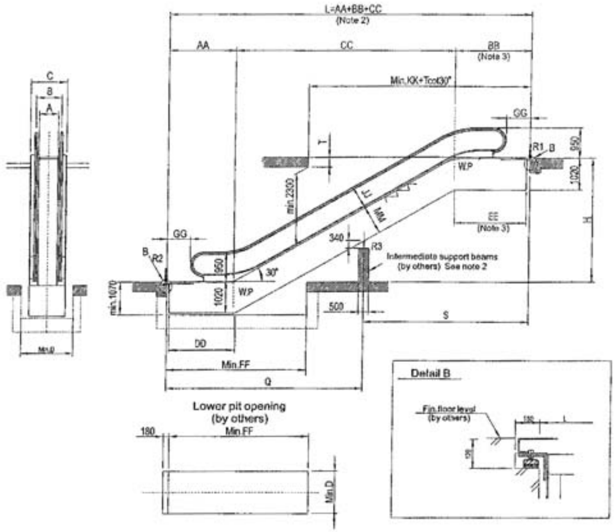

TYPE	AA	BB	CC	DD	EE	FF	GG	JJ	KK	MM	H	Flat steps
	2198	2567	H×1.732	2220	2465	4250	×	800	6555	915	H≤6000	2

A	600	800	1000
B	838	1038	1238
C	1150	1350	1550
D	1250	1450	1650
F	16000	15000	14000

Notes :
1) The escalator corresponds to European standard EN-115.
2) If L>F, an intermediate support shall be required.
3) Add 500mm in case of A=600.

Reactions (KN)

A		R1	R2	R3
600	L≤F	3.33L+15.19	3.33L+9.80	
	L>F	3.33L+11.76	3.33Q+4.80	3.33L+3.53
800	L≤F	3.68L+16.66	3.68L+10.78	
	L>F	3.68S+11.76	3.68Q+4.12	3.68L+3.92
1000	L≤F	4.12L+18.13	4.12L+11.27	
	L>F	4.12S+11.76	4.12Q+4.80	4.12L+4.41

Note : L is in meters.

Layout of Escalator Panel Type 35

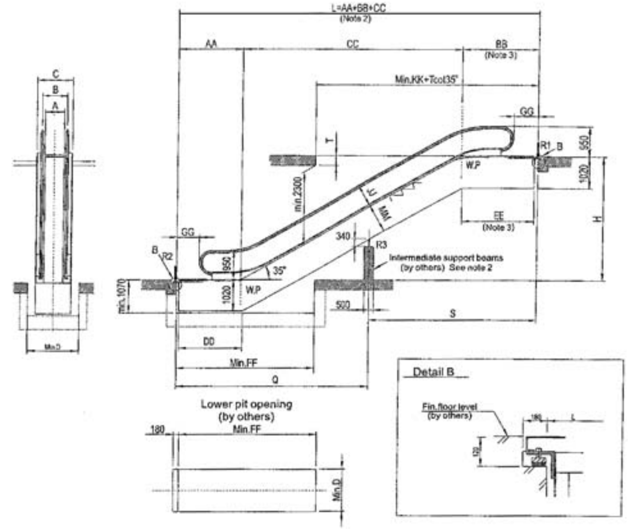

TYPE	AA	BB	CC	DD	EE	FF	GG	JJ	KK	MM	H	Flat steps
	2242	2663	H×1.428	2375	2450	4100	×	800	5950	935	H≤6000	2

A	600	800	1000
B	838	1038	1238
C	1150	1350	1550
D	1250	1450	1650
F	16000	15000	14000

Notes :
1) The escalator corresponds to European standard EN-115.
2) If L>F, an intermediate support shall be required.
3) Add 500mm in case of A=600.

Reactions (KN)

A		R1	R2	R3
600	L≤F	3.33L+15.19	3.33L+9.80	
	L>F	3.33L+11.76	3.33Q+4.80	3.33L+3.53
800	L≤F	3.68L+16.66	3.68L+10.78	
	L>F	3.68S+11.76	3.68Q+4.12	3.68L+3.92
1000	L≤F	4.12L+18.13	4.12L+11.27	
	L>F	4.12S+11.76	4.12Q+4.80	4.12L+4.41

Note : L is in meters.

Fujitec GS8000

Plate 3.5. Layout of escalators. (Courtesy Fujitec, London)

Layout of Escalator Slim & Frame Type 30

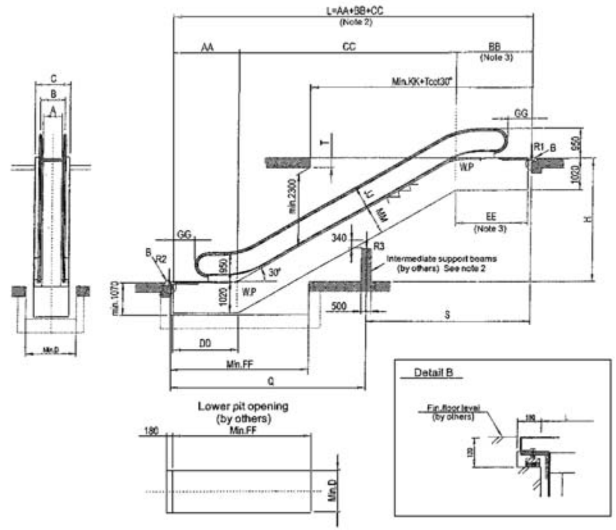

TYPE	AA	BB	CC	DD	EE	FF	GG	JJ	KK	MM	H	Flat steps
	2198	2567	H×1.732	2220	2465	4250	345	800	6555	915	H≤6000	2

A	600	800	1000
B	838	1038	1238
C	1150	1350	1550
D	1250	1450	1650
F	16000	15000	14000

Notes :
1) The escalator corresponds to European standard EN-115.
2) If L>F, an intermediate support shall be required.
3) Add 500mm in case of A=600.

Reactions (KN)

A		R1	R2	R3
600	L≤F	3.33L+15.19	3.33L+9.80	
	L>F	3.33S+11.76	3.33Q+4.80	3.33L+3.53
800	L≤F	3.68L+16.66	3.68L+10.78	
	L>F	3.68S+11.76	3.68Q+4.12	3.68L+3.92
1000	L≤F	4.12L+18.13	4.12L+11.27	
	L>F	4.12S+11.76	4.12Q+4.80	4.12L+4.41

Note : L is in meters.

Layout of Escalator Slim & Frame Type 35

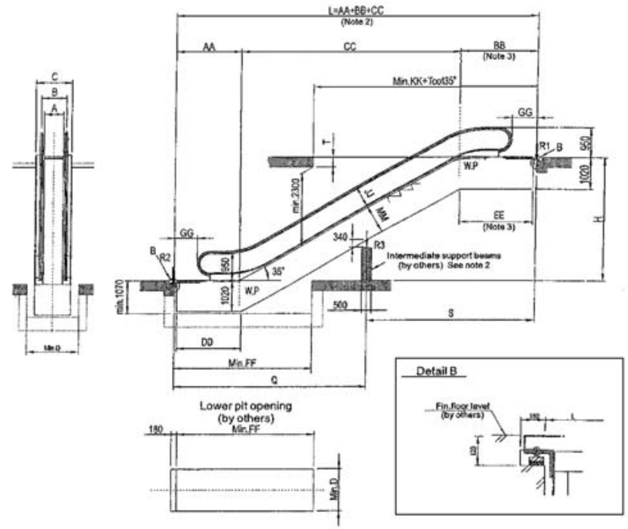

TYPE	AA	BB	CC	DD	EE	FF	GG	JJ	KK	MM	H	Flat steps
	2242	2663	H×1.428	2375	2450	4100	345	800	5950	935	H≤6000	2

A	600	800	1000
B	838	1038	1238
C	1150	1350	1550
D	1250	1450	1650
F	16000	15000	14000

Notes :
1) The escalator corresponds to European standard EN-115.
2) If L>F, an intermediate support shall be required.
3) Add 500mm in case of A=600.

Reactions (KN)

A		R1	R2	R3
600	L≤F	3.33L+15.19	3.33L+9.80	
	L>F	3.33S+11.76	3.33Q+4.80	3.33L+3.53
800	L≤F	3.68L+16.66	3.68L+10.78	
	L>F	3.68S+11.76	3.68Q+4.12	3.68L+3.92
1000	L≤F	4.12L+18.13	4.12L+11.27	
	L>F	4.12S+11.76	4.12Q+4.80	4.12L+4.41

Note : L is in meters.

Fujitec GS8000

Plate 3.6. Escalator slim and frame type. (Courtesy Fujitec, London)

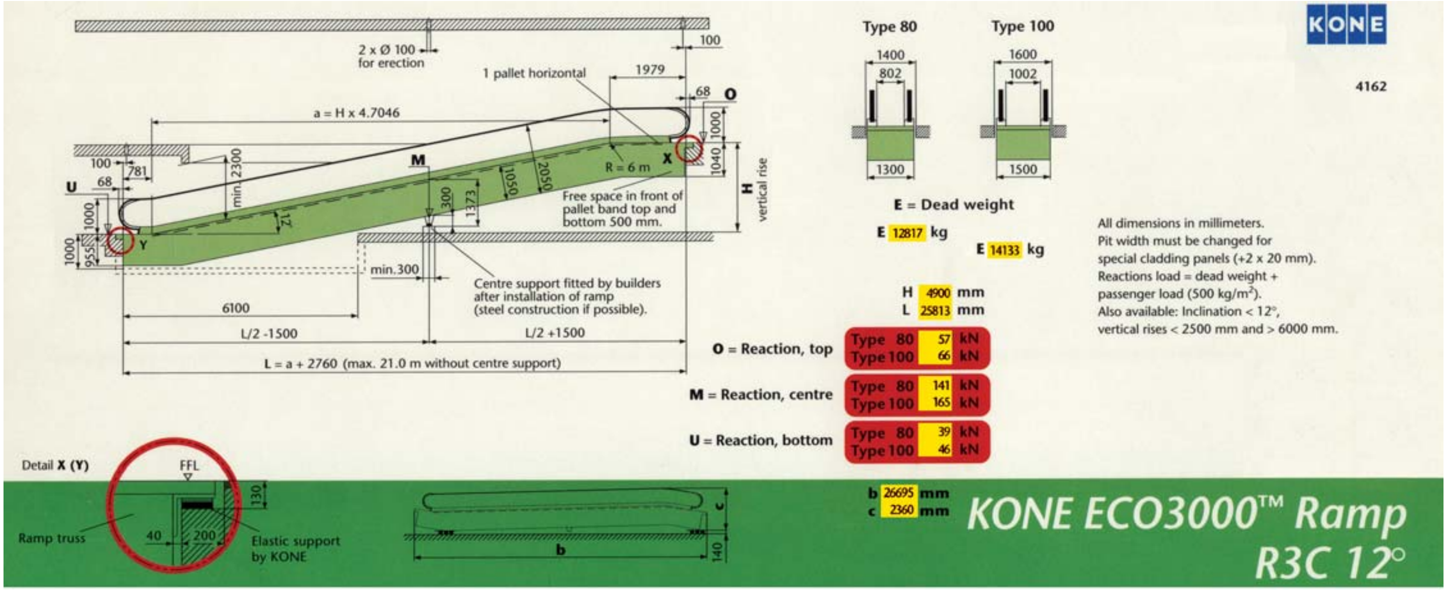

7634	7850	8066	8282	8498	8714	8930	9146	9362	9578	9794	10010	10226	10442	10658	10873	11089	11305
8375	8615	8855	9095	9335	9575	9815	10055	10294	10534	10774	11014	11254	11494	11734	11974	12214	12454
2500	2600	2700	2800	2900	3000	3100	3200	3300	3400	3500	3600	3700	3800	3900	4000	4100	4200
14522	14992	15462	15933	16403	16874	17344	17815	18285	18756	19226	19697	20167	20637	21108	21578	22049	22519
69.2	71.2	73.2	75.2	77.2	79.2	81.2	83.2	85.2	87.2	89.2	91.2	93.2	95.2	49	50	51	52
80	82.5	84.8	87.2	89.5	91.9	94.2	96.6	98.9	101.3	103.6	106.0	108.3	110.7	57	58	59	60
														117	119	121	124
														137	139	142	145
63.7	65.7	67.7	69.7	71.7	73.7	75.7	77.7	79.7	81.7	83.7	85.7	87.7	89.7	31	32	33	33
74.5	77	79.3	81.7	84	86.4	88.7	91.1	93.4	95.8	98.1	100.5	102.8	105.2	36	37	38	39
15155	15635	16115	16600	17080	17560	18040	18520	19000	19485	19965	20445	20925	21205	21885	22370	22850	23330
2335	2335	2340	2340	2340	2345	2345	2345	2350	2350	2350	2350	2350	2355	2355	2355	2355	2355

11521	11737	11953	12169	12385	12601	12817	13033	13249	13465	13681	13897	14113	14329	14544	14760	14976	15192
12694	12934	13174	13414	13654	13893	14133	14373	14613	14853	15093	15333	15573	15813	16053	16293	16533	16773
4300	4400	4500	4600	4700	4800	4900	5000	5100	5200	5300	5400	5500	5600	5700	5800	5900	6000
22990	23460	23931	24401	24872	25342	25813	26283	26753	27224	27694	28165	28635	29106	29576	30047	30517	30988
52	53	54	55	56	57	57	58	59	60	61	62	62	63	64	65	66	67
61	62	63	63	64	65	66	67	68	69	70	71	72	73	74	75	76	77
126	129	131	133	136	138	141	143	146	148	151	153	155	158	160	163	165	168
148	151	154	157	159	162	165	168	171	174	177	180	183	185	188	191	194	197
34	35	36	37	38	38	39	40	41	42	43	43	44	45	46	47	48	48
40	41	42	43	44	45	46	47	48	49	50	51	52	53	54	55	56	57
23810	24290	24770	25250	25735	26215	26695	27175	27655	28140	28620	29100	29580	30060	30540	31025	31505	31985
2360	2360	2360	2360	2360	2360	2360	2365	2365	2365	2365	2365	2365	2365	2365	2365	2365	2370

Plate 3.7. KONE Eco 3000 Ramp and its data.

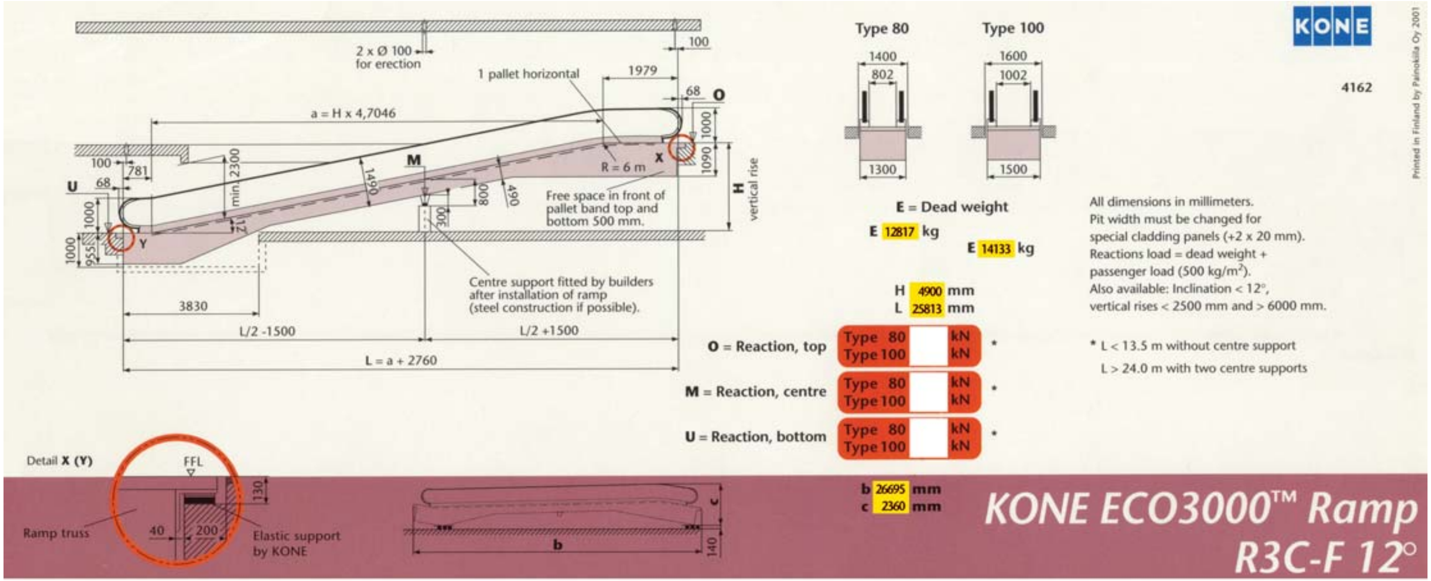

7634	7850	8066	8282	8498	8714	8930	9146	9362	9578	9794	10010	10226	10442	10658	10873	11089	11305
8375	8615	8855	9095	9335	9575	9815	10055	10294	10534	10774	11014	11254	11494	11734	11974	12214	12454
2500	2600	2700	2800	2900	3000	3100	3200	3300	3400	3500	3600	3700	3800	3900	4000	4100	4200
14522	14992	15462	15933	16403	16874	17344	17815	18285	18756	19226	19697	20167	20637	21108	21578	22049	22519
37	38	39	40	41	41	42	43	44	45	46	46	47	48	49	50	51	52
43	44	45	46	47	48	49	50	51	52	53	54	55	56	57	58	59	60
83	86	88	90	93	95	97	100	102	104	107	109	112	114	117	119	121	124
97	100	103	106	108	111	114	117	120	122	125	128	131	134	137	139	142	145
19	20	21	22	22	23	24	25	26	27	28	28	29	30	31	32	33	33
22	23	24	25	26	27	28	29	30	31	32	33	34	35	36	37	38	39
15220	15635	16115	16600	17080	17560	18040	18520	19000	19485	19965	20445	20925	21205	21885	22370	22850	23330
2330	2330	2330	2340	2340	2345	2345	2345	2350	2350	2350	2350	2350	2355	2355	2355	2355	2355

11521	11737	11953	12169	12385	12601	12817	13033	13249	13465	13681	13897	14113	14329	14544	14760	14976	15192
12694	12934	13174	13414	13654	13893	14133	14373	14613	14853	15093	15333	15573	15813	16053	16293	16533	16773
4300	4400	4500	4600	4700	4800	4900	5000	5100	5200	5300	5400	5500	5600	5700	5800	5900	6000
22990	23460	23931	24401	24872	25342	25813	26283	26753	27224	27694	28165	28635	29106	29576	30047	30517	30988
52	53	54															
61	62	63															
126	129	131															
148	151	154															
34	35	36															
40	41	42															
23810	24290	24770	25250	25735	26215	26695	27175	27655	28140	28620	29100	29580	30060	30540	31025	31505	31985
2360	2360	2360	2360	2360	2360	2360	2365	2365	2365	2365	2365	2365	2365	2365	2365	2365	2370

Plate 3.7. (*Continued*).

Schindler 9300™

Type 10 / 30°-K

Rise:	max. 7.5 m at a step width of 1000 mm	Balustrade:	Design E/F	Inclination:	30°
		Balustrade height:	900 (1000) mm	Step width:	600/800/1000 mm
		Truss:	standard	Step run:	2 horizontal steps

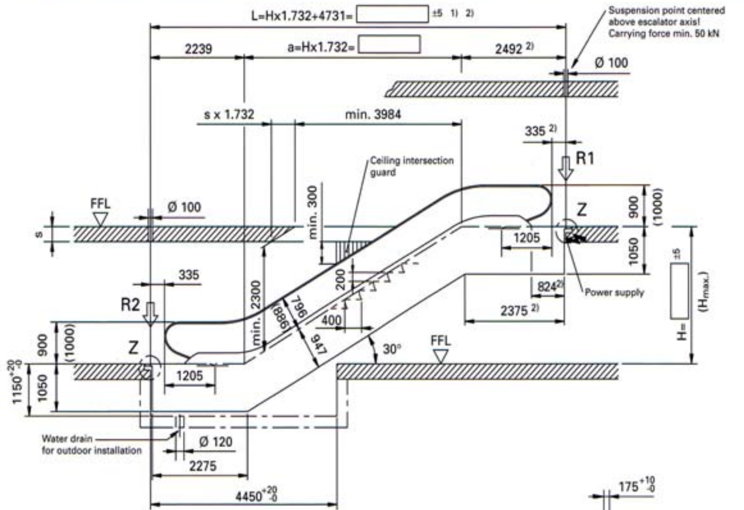

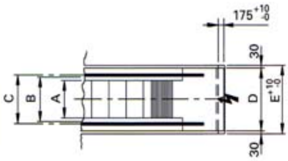

	Step width 600 mm	Step width 800 mm	Step width 1000 mm
A: Step width	600	800	1000
B: Width between handrails	758	958	1158
C: Handrail center distance	838	1038	1238
D: Width of escalator	1140	1340	1540
E: Width of well	1200	1400	1600
Lmax.[1]: Limiting span length	19300	17600	16200
Hmax.: Maximum rise	12000	9300	7500

Step width A mm	Rise H mm	Weight kN	Support loads R1 kN	Support loads R2 kN	P mot[4] kW v=0.5m/s	Transport dimensions, Balustrade height 1000: h[5]	Transport dimensions, Balustrade height 1000: l
600	3000	59	48	40	5.5	2830	10860
	3500	62	51	43	5.5	2860	11850
	4000	66	54	47	5.5	2880	12840
	4500	69	57	50	5.5	2890	13840
	5000	73	61	53	5.5	2910	14830
	5500	77	64	56	5.5	2920	15830
	6000	80	67	59	7.5	2930	16820
800	3000	62	55	47	5.5	2830	10860
	3500	66	58	51	5.5	2860	11850
	4000	70	62	54	5.5	2880	12840
	4500	73	66	58	5.5	2890	13840
	5000	77	69	61	7.5	2910	14830
	5500	81	73	65	7.5	2920	15830
	6000	89	79	71	7.5	2930	16820
1000	3000	66	62	54	5.5	2830	10860
	3500	70	66	58	5.5	2860	11850
	4000	74	70	62	7.5	2880	12840
	4500	78	74	66	7.5	2890	13840
	5000	86	80	72	7.5	2910	14830
	5500	90	85	77	11.0	2920	15830
	6000	94	89	81	11.0	2930	16820

All dimensions in mm. Observe national regulations! Subject to changes.

Detail Z

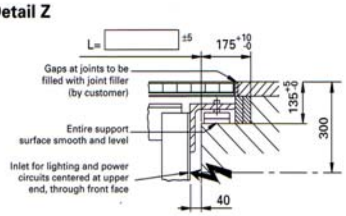

Transport dimensions

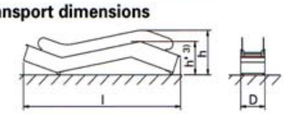

1) If L > Lmax., an intermediate support may be required; please consult Schindler.
2) With a double drive, the truss must be extended by 417 mm
3) h' = h - 770 mm
4) P mot: For detailed information, consult Schindler.
5) In the case of balustrade height 900 mm, h is reduced by 70 mm.

Schindler

Plate 3.8.

Schindler 9300™

Type 10 / 35°-K

Rise:	max. 7.5 m[6] at a step width of 1000 mm	Balustrade:	Design E/F	Inclination:	35°
		Balustrade height:	900 (1000) mm	Step width:	600/800/1000 mm
		Truss:	standard	Step run:	2 horizontal steps

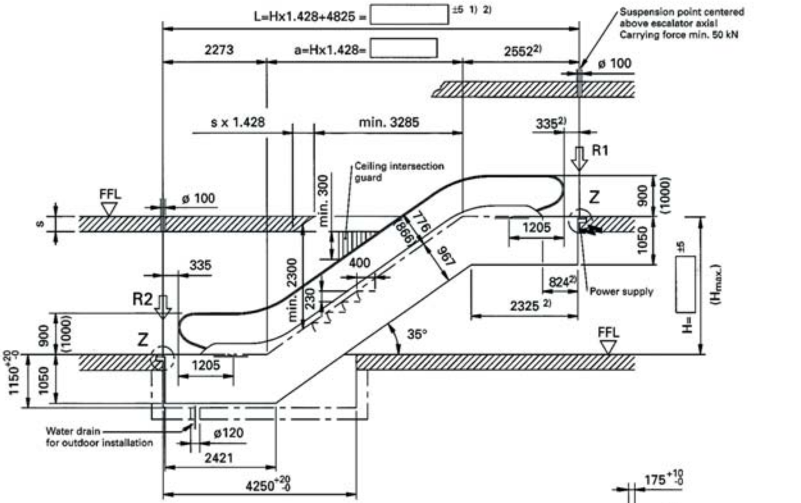

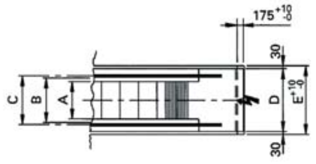

	Step width 600 mm	Step width 800 mm	Step width 1000 mm
A: Step width	600	800	1000
B: Width between handrails	758	958	1158
C: Handrail center distance	838	1038	1238
D: Width of escalator	1140	1340	1540
E: Width of well	1200	1400	1600
Lmax.[1]: Limiting span length	19000	17300	15900
Hmax.[6]: Maximum rise	12000	9300	7500

Step width A mm	Rise H mm	Weight kN	Support loads R1 kN	Support loads R2 kN	P mot[4] kW v=0.5m/s	Transport dimensions Balustrade height 1000 h[5]	Transport dimensions l
600	3000	56	45	38	5.5	2920	10110
	3500	59	48	40	5.5	2950	10960
	4000	62	51	43	5.5	2970	11820
	4500	65	53	46	5.5	2990	12680
	5000	68	56	48	5.5	3010	13540
	5500	71	59	51	5.5	3020	14400
	6000	75	61	53	5.5	3040	15270
800	3000	59	52	43	5.5	2920	10110
	3500	62	55	47	5.5	2950	10960
	4000	65	58	50	5.5	2970	11820
	4500	69	61	53	5.5	2990	12680
	5000	72	64	56	5.5	3010	13540
	5500	75	67	59	7.5	3020	14400
	6000	79	70	62	7.5	3040	15270
1000	3000	62	58	50	5.5	2920	10110
	3500	66	62	53	5.5	2950	10960
	4000	69	65	57	5.5	2970	11820
	4500	73	69	61	7.5	2990	12680
	5000	77	72	64	7.5	3010	13540
	5500	80	76	68	7.5	3020	14400
	6000	88	81	73	11.0	3040	15270

All dimensions in mm. Observe national regulations! Subject to changes.

Detail Z

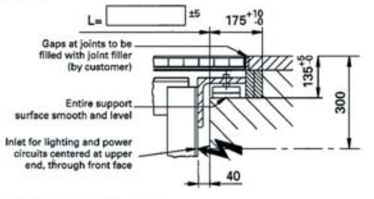

Transport dimensions

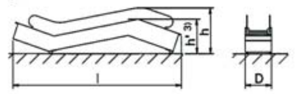

1) If L > Lmax., an intermediate support may be required; please consult Schindler.
2) With a double drive, the truss must be extended by 417 mm
3) h' = h - 770 mm
4) P mot: For detailed information, consult Schindler.
5) In the case of balustrade height 900 mm, h is reduced by 70 mm.
6) According to EN 115: Hmax. = 6000 mm.

Schindler

Plate 3.9.

3.2 LIST OF SYMBOLS BASED ON The European Standard EN115

Explanation (in the order it appears in the document)	Symbol for quantity	Unit
Theoretical capacity	c_t	persons/h
Rated speed	υ	m/s
Factor for different step width	k	-
Vertical distance between top edge of skirting or bottom edge of cover joints and the tread surface of the steps, pallets or belt	h_2	mm
Angle of inclination between the interior profile and the balustrade interior panelling	γ	° (degree)
Horizontal part of the interior profile that directly joins the balustrade interior panelling	b_4	mm
Newel, including the handrail in longitudinal direction measured from the combs	l_2	m
Root of the comb teeth	L_1	-
Free height above the steps, pallets or belt	h_4	m
Vertical obstruction	h_5	m
Distance between the centreline of the handrail and an obstacle	b_9	m
Nominal width for the load carrying area (step, pallet or belt)	z_1	m
Distance between supports	l_1	m
Horizontal portion of the handrail in the direction of landing measured from the root of the comb teeth	l_3	m
Distance between the handrail profile and guide or	b'_6	mm
cover profiles	b''_6	mm
Horizontal distance between the outer edge of the handrail and walls or other obstacles	b_{10}	mm
Width of the handrail	b_2	mm
Distance between the handrail and the edge of the balustrade	b_5	mm
Distance between the handrail centrelines	b_1	m
Distance between skirting	z_2	m
Distance between the entry of handrail into the newel and the floor	h_3	m
Horizontal distance between the furthest point reached by the handrail and the point of entry into the newel	l_4	m
Vertical distance between the handrail and step nose or pallet surface or belt surface	h_1	m
Step height	x_1	m
Step depth	y_1	m
Width of the grooves	b_7	mm
Depth of the grooves	h_7	mm
Web width	b_8	mm
Transverse distance between the supporting rollers	z_3	mm
Design angle of the teeth of the comb	β	° (degrees)
Angle of inclination of the escalator or passenger conveyor	α	° (degrees)
Mesh depth of the comb into the grooves of the tread	h_8	mm
Clearance between the upper edge of the tread surface and the root of the comb teeth	h_6	mm
Comb intersection line	L_2	-

3.3 DEFINITIONS AND GENERAL SPECIFICATIONS

A number of standards exist which include E84 ESTM NFPA 255, ANSI/UL 94, EN 115 (1995) etc. Various definitions and specifications are summarised based on these standards.

1. *Escalator*

Power-driven installation with endless moving stairway for the conveyance of passengers in the upward or downward direction.

2. *Passenger conveyor, travelators, moving walkways*

Power-driven installation with endless moving walkway (e.g. pallets, belt) for the conveyance of passengers, either on the same or between different traffic levels. A reference is made to the separate discussion on this subject.

3. *Handrail*

Moving part intended to serve as a handhold for the passengers.

4. *Type required*

Each balustrade shall be provided with a handrail moving in the same direction and at substantially the same speeds as the steps. In the case of curved escalators, this shall be substantially the same angular velocity.

5. *Extension beyond combplates*

Each moving handrail shall extend at normal handrail height not less than 12 in. (305 mm) beyond the line of points of the combplate teeth at the upper and lower landings.

6. *Balustrades*

Balustrades shall be installed on each side of the escalator.

(a) The balustrade on the step side shall have no areas or moldings depressed or raised more than 1/4 in. (6.4 mm) from the parent surface. Such areas or moldings shall have all boundary edges bevelled or rounded.
(b) The balustrade shall be totally closed, except:
Where the handrail enters the newel base;
Gaps between interior panels shall not be wider than 3/16 in. (4.8 mm). The edges shall be rounded or bevelled.
(c) The width between the balustrade interior panels in the direction of travel shall not be changed.

7. *Strength*

Balustrades shall be designed to resist the simultaneous application of a static lateral force of 40 lbf/ft (584 N/m) and a vertical load of 50 lbf/ft (730 N/m), both applied to the top of the handrail stand.

8. *Skirting*

Portion of the enclosure adjacent to the outer edges of the steps, pallets or belt.

9. *Interior profile*

This profile connects the skirting with the balustrade interior panelling.

10. *Balustrade interior panelling*

Interior panels between the skirting or the interior profile and the balustrade decking underneath the handrail.

11. *Balustrade decking*

This decking is situated underneath the handrail and forms the top cover of the balustrade panelling.

12. *Balustrade exterior panelling*
Exterior panelling which from the balustrade deckings encloses the escalator or passenger conveyor.

13. *Newel*
End of the balustrade on the landings, where the handrails change their direction of movement.

Normally, climbing on the outside of the balustrade is possible only at the lower landings, because at the upper landings, railings or parapets prevent access to the balustrade. Climbing on the balustrade within the area of the lower landings is prevented, for instance, by the smooth outer balustrade decking, by railings arranged parallel to the balustrade, or by additional parts arranged at right angles to the balustrade.

With a vertical force of 900 N distributed over the surface of the handrail for a length of 0.5 m, there shall be no permanent deformation, no breakage or displacement of any balustrade parts.

The parts of the balustrade facing the steps, pallets or belt shall be smooth. Covers or strips not in the direction of travel shall not project more than 3 mm. They shall be sufficiently rigid and have rounded or bevelled edges. Covers or strips of such nature are not permitted at the skirting.

Cover joints at the direction of travel (in particular between the skirting and the balustrade interior panelling) shall be arranged and formed in such a manner that the risk of trapping is reduced to a minimum.

Gaps between the interior panels of the balustrade shall be not wider than 4 mm. The edges shall be rounded off or bevelled. The balustrade interior panelling shall have adequate mechanical strength and rigidity. When a force of 500 N is applied to the balustrade interior panelling at any point of the panelling at right angles on an area of 25 cm^2, there shall be no gap greater than 4 mm and no permanent deformation (setting tolerances are permitted).

The use of glass for the balustrade interior panelling is permitted provided it is splinter-free one-layer safety glass (tempered glass) and has sufficient mechanical strength and rigidity. The thickness of the glass shall be not less than 6 mm.

Protrusions and indentations shall not present sharp edges.

The skirting shall be vertical. The vertical distance h_2 between the top edge of the skirting or the bottom edge of projecting cover joints or the rigid part of deflector devices where installed, and the tread surface of the steps, pallets or belt shall be not less than 25 mm.

On the top of each balustrade there shall be provided a handrail moving in the same direction and at a speed tolerance of 0% to 2% of the speed of the steps, pallets or belt.

14. *Continuation of the handrail beyond the comb*
The horizontal portion of the handrail shall continue longitudinally at the landings for a distance l_3 of at least 0.30 m past the root of the comb teeth.

15. *Profile and position*
The handrail profiles and their guides on the balustrades shall be formed or enclosed in such a way that the possibility of pinching or trapping of fingers or hands is reduced.

The distance between the handrail profile and the guide or cover profiles shall under no circumstances be wider than 8 mm.

To prevent collision, the horizontal distance b_{10} between the outer edge of the handrail and walls or other obstacles shall under no circumstances be less than 80 mm. This distance shall be maintained to a height of at least 2.10 m above the steps of the escalator and above the pallets or the belt of the passenger conveyor. This height is permitted to be smaller if by appropriate measures the risk of injury is avoided.

For escalators arranged adjacent to one another either parallel or criss-cross, the distance between the edges of the handrails shall be not less than 120 mm.

The width b_2 of the handrail shall be between 70 mm and 100 mm. The distance b_5 between the handrail and the edge of the balustrade shall not exceed 50 mm.

16. *Distance between the handrail centrelines*
The distance b_1 between the centreline of the handrails shall not exceed the distance between the skirting by more than 0.45 m.

17. *Protection at the point of entry into the balustrade*
The lowest point of entry of the handrail into the newel shall be at a distance h_3 from the floor which shall be not less than 0.10 m and not exceed 0.25 m.

The horizontal distance l_4 between the furthest point reached by the handrail and the point of entry into the newel shall be at least 0.30 m.

At the point of entry of the handrail into the newel a guard shall be installed to prevent the pinching of fingers and hands.

18. *Height above the steps, pallets and the belt*
The vertical distance h_1 between the handrail and step nose pr pallet surface or belt surface shall be not less than 0.90 m and not exceed 1.10 m.

19. *Skirt Panels*
(1) The height of the skirt above the tread nose line shall be at least 1 in. (25 mm) measured vertically.
(2) Skirt panel shall not deflect more than 1/16 in. (1.6 mm) under a force of 150 lbf (667 N).
(3) The exposed surfaces of the skirt panels adjacent to the steps shall be smooth and made from a low friction material or treated with a friction reducing material.

20. *Use of glass or plastic*
Glass or plastic, if used in balustrades, shall conform to the requirements of ANSI Z97.1 or 16 CFR Part 1201, except that there shall be no requirement for the panels to be transparent.

Plastic bonded to basic supporting panels is not required to conform to the requirements of ANSI Z97.1.

21. *Anti-slide device*
On high deck balustrades, anti-slide devices shall be provided on decks or combination of decks when the outer edge of the deck is greater than 12 in. (305 mm) from the centreline of the handrail or on adjacent escalators.

22. *Deck barricades*
A barricade to prevent access to the outer deck on low deck exterior balustrades shall be provided at the top and bottom ends of each escalator when the outer deck width exceeds 5 in. (127 mm). On parallel abutting unit, this protection shall be provided where the combined outer deck width exceeds 5 in. (127 mm). The barricade shall extend to a height which is nominally 4 in. (102 mm) below the top of the handrail.

Barricades may be made of glass or plastic provided that they meet the requirements of Rule 802.3c.

The skirting shall be extremely rigid, plane, and butt-jointed. However, special arrangements instead of butt-jointing will possibly be necessary for long passenger conveyors at the points where they pass over building expansion joints.

23. *Guards*
Hand or finger guards shall be provided at the point where the handrail enters the balustrade.

23(a). *Guard at ceiling intersection*
(1) On high deck balustrades, a solid guard shall be provided in the intersection of the angle of the outside balustrade deck and the ceiling or soffit, under the following conditions:
   (a) where the clearance between the outside edge of the deck and the ceiling or soffit is 12 in. (305 mm) or less; or
   (b) where the projected intersection of the outside deck and the ceiling or soffit is 24 in. (610 mm) or less from the centreline of the handrail.

(2) On low deck balustrades, a solid guard shall be provided to protect the intersection formed by the top of the handrail and the plane of the ceiling or soffit where the centreline of the handrail is 14 in. (356 mm) or less from the ceiling or soffit.
(3) The vertical edge of the guard shall be a minimum of 8 in. (203 mm) in length.
(4) The escalator side of the vertical face of the guard shall be flush with the face of the wellway.
(5) The exposed edge of the guard shall be rounded and have a minimum width of ¼ in. (6.4 mm).
(6) Guards may be a glass or plastic, provided they meet the requirements.

24. *Comb*

Parts which, at both landings, mesh with the steps, pallets or the belt in order to facilitate the transition of passengers.

25. *Deflector device*

An additional device to minimize the risk of trapping between the step and the skirting.

26. *Rated speed*

Speed in the direction of the moving steps, pallets or the belt, when operating the equipment under no load condition, stated by the manufacturer as that for which the escalator or passenger conveyor has been designed and at which it should operate.

27. *Angle of inclination*

Maximum angle to the horizontal in which the steps, the pallets or the belt move. It shall not exceed 30° from the horizontal. Due to field conditions it may be exceeded on top of 30° by 1°.

28. *Interior low deck*

The interior low deck, where provided, shall conform to the following:
(1) The width from the vertical face of the interior panel to the vertical plane of the skirt panel shall not exceed 6 in. (152 mm).
(2) The profile of the deck perpendicular to the line of travel shall be at least 20° but not greater than 30°.
(3) A horizontal section may be provided immediately adjacent to the interior panel. It shall be not greater than 1¼ in. (32 mm).

29. *Clearance between skirt and step.*

The clearance on each side of the steps between the step tread and the adjacent skirt panel shall be not more than 3/16 in. (4.8 mm).

30. *Steps, pallets, belt and combs*

(a) Material and Type
- Step frames, treads, and risers, excluding their attachments or inserts, shall be metal, except that magnesium alloys shall not be used; or the materials, in their end use configuration, shall have a flame spread index of 0 to 50 based on the tests conducted in accordance with the requirements of ASTM E84, UL 273, or NFPA 255.
- Nonmetallic attachments and inserts (excluding wheels) shall be classified 94 HB or better in accordance with ANSI/UL 94.
- Step tread shall be horizontal and shall afford a secure foothold.

(b) Dimensions of steps

The depth of any step tread in the direction of travel shall be not less than 15¾ in. (400 mm), and the rise between treads shall be not more than 8½ in. (216 mm). The width of a step tread shall be not less than 22 in. (559 mm) nor more than 40 in. (1016 mm).

(c) Cleated step risers

The step riser shall be provided with vertical cleats which shall mesh with slots on the adjacent step tread wherever the steps are exposed.

Dimensions (see figure 3.2)
The step height x_1 shall not exceed 0,24 m.
If escalators are permitted to be used as an emergency exit when out of service, the step height shall not exceed 0,21 m.
The step depth y_1 shall be not less than 0,38 m.
For escalators and passenger conveyors with an angle of inclination up to 6°, larger widths are permitted.

31. *Construction of the steps, pallets and the belt*
The steps, pallets and the belt shall match the operational conditions. They shall be able to support continuously an equally distributed load corresponding to 6000 N/m^2 without such deformation that would prejudice the proper functioning of the escalator or passenger conveyor.

To establish the dimensions of the belt, an area of effective width × 1,0 m length shall be taken as a basis for this specific load.

The steps and pallets shall satisfy the following tests and requirements:

(a) Static test
(b) Steps

The step shall be tested for deflection with a single force of 3000 N (including the weight of the plate) applied perpendicular to the tread surface on a steel plate 0,20 m × 0,30 m in size and at least 25 mm thick, in the centre of the tread surface. The edge of the plate which is 0,20 m long shall be arranged parallel to the front edge of the step, the edge of the plate which is 0,30 m long at right angles to the front edge of the step.

The step shall be tested at the maximum inclination (inclined support) for which the step is to be applied, together with rollers (not rotating), axles of stub shafts (if existing). It shall be subjected to a load pulsating between 500 N and 3000 N at a frequency between approximately 5 Hz and 20 Hz for at least 5×10^6 cycles, whereby an undisturbed harmonic force flow shall be achieved. The load shall be applied perpendicular to the tread surface on a steel plate 0,20 m × 0,30 m in size at least 25 mm thick, arranged as specified in the centre of the tread surface.

32. *Pallets*
The pallet shall be tested for deflection with a single force which, for a pallet area of 1 m^2, shall be 7500 N (including the weight of the plate). The force shall be applied perpendicular to the tread surface on a steel plate 0,30 m × 0,45 m in size and at least 25 mm thick, in the centre of the tread surface, and the edge of the plate which is 0,45 m long shall be arranged parallel to the lateral edge of the pallet.

For pallets with smaller or larger areas, the force and the loading area shall be changed proportionally, whereby for the loading area the ratio of edge length shall be 1:1,5; however, the force shall be not below 3000 N (including the weight of the plate), the size of the plate be not smaller than 0,20 m × 0,30 m and its thickness be not less than 25 mm.

During this test, the deflection measured at the tread surface shall be not more than 4 mm. There shall be no permanent deformation (setting tolerances are permitted).

They shall be tested as a whole, together with rollers (not rotating), axles or stub shafts (if existing) in a horizontal position. A test of the installed pallet, i.e. together with the guide rails and the supporting structure of the passenger conveyor, is not required.

The pallet, irrespective of its size, shall be tested in a horizontal position together with rollers (not rotating), axles or stub shafts (if existing). It shall be subjected to a load pulsating between 500 N and 3000 N at a frequency between approximately 5 Hz and 20 Hz for at least 5×10^6 cycles, whereby an undisturbed harmonic force flow shall be achieved. The load shall be applied perpendicular to the tread surface on a steel plate 0,20 m × 0,30 m in size and at least 25 mm thick, in the centre of the tread surface.

33. *Belts*
The belts shall have grooves in the direction of movement, with which the teeth of the comb mesh.

The width b_7 of the grooves shall be at least 4,5 mm and not exceed 7 mm, and shall be measured at the tread surface of the belt.

The depth h_7 of the grooves shall be not less than 5 mm.

The web width b_8 shall be at least 4,5 mm and not exceed 8 mm, and shall be measured at the tread surface of the belt.

The factor of safety for the belt shall be at least 5.

34. *Step tread and pallets*

The surface of the step treads and pallets shall have grooves in the direction of movement, with which the teeth of the combs mesh. The step treads of the escalator shall be approximately horizontal in the usable area of the escalator:

The width b_7 of the grooves shall be at least 5 mm and not exceed 7 mm.

The depth h_7 of the grooves shall be not less than 10 mm.

35. *Combs*

General

Combs shall be fitted at both landings to facilitate the transition of passengers.

Construction

The teeth of the combs shall mesh with the grooves of the steps, pallets or belt. The width of the comb teeth shall be not less than 2,5 mm, measured at the tread surface.

The ends of the combs shall be rounded off and so shaped as to minimize the risk of trapping between combs and steps, pallets or belt. The radius of the teeth end shall be not greater than 2 mm.

The teeth of the comb shall have a form and inclination so that the feet of passengers, leaving the escalator or passenger conveyor, will not stub against them. The design angle β shown shall not exceed 40°.

The combs or their supporting structure shall be readjustable, to ensure correct meshing.

The combs shall be easily replaceable.

On escalators and pallet passenger conveyors, the combs shall be rigid and have such a design that upon trapping of foreign bodies either their teeth deflect and remain in mesh with the grooves of the steps or pallets, or they break.

On belt passenger conveyors, the combs shall be rigid. Upon trapping of foreign bodies the belt webs are permitted to deflect; however, the comb teeth shall remain in mesh with the grooves.

36. *Clearance between steps, pallets or belt and skirting*

Where the skirting of escalators or passenger conveyors is placed beside the steps and pallets or the belt, the horizontal clearance shall not exceed 4 mm at either side, and 7 mm for the sum of clearances measured at both sides at two directly opposite points.

37. *Surrounds of the escalator and passenger conveyor*

The skirting defined shall yield not more than 4 mm under a single force of 1500 N acting at the most unfavourable point at right angles to the surface over an area of 25 cm^2. No permanent deformation shall result from this.

On escalators, the possibility of trapping between skirting and steps shall be reduced.

For this purpose, the following three conditions shall be fulfilled:

- sufficient rigidity of the skirting
- clearances to be in accordance with specific codes
- reduction of the coefficient of friction by the use of suitable materials or a suitable type of lining for the skirting.

In addition, suitable deflector devices or yellow markings may be provided on the sides of the step tread surface.

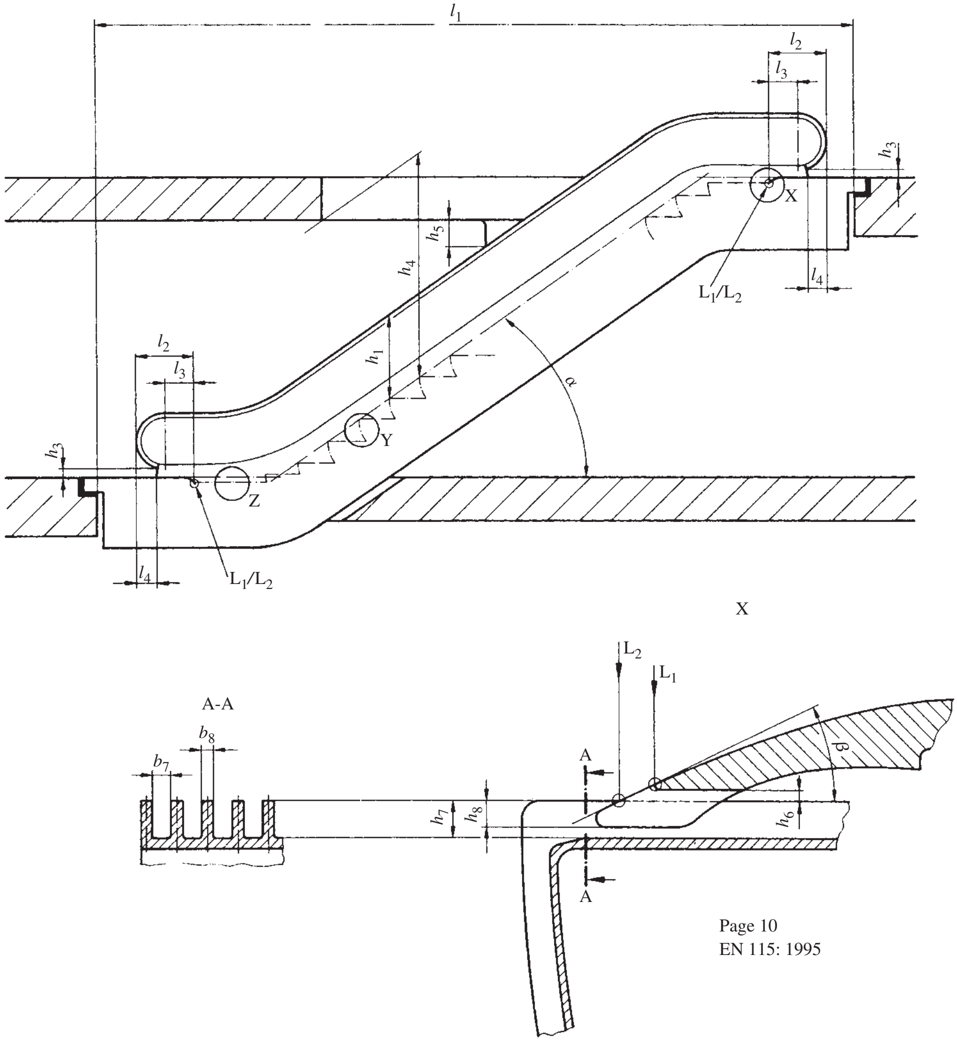

Figure 3.1. Escalator (elevation), principal dimensions (with compliments from BSI, London).

The interior profile and the balustrade interior panelling shall have an angle of inclination γ of at least 25° to the horizontal (see figure 3.1).

This requirement does not apply to the horizontal part of the interior profile that directly joins the balustrade interior panelling (see l_4 in figure 3.1)

This horizontal part l_4 up to the balustrade interior panelling shall be less than 30 mm.

The width l_3, measured horizontally, of each interior profile inclined at an angle of less than 45° to the horizontal shall be less than 0.12 m (see figure 3.1)

The horizontal distance (measured at right angles to the direction of travel) between the balustrade interior panelling at lower points shall be equal to or less than the horizontal distance measured at points higher up. The maximum distance between the balustrade interior panelling at any point shall be smaller than the distance between handrails.

EXCEPTION. If the horizontal distance between the handrails is smaller than the distance between the balustrade panelling underneath the handrails (exempt from this is the area of skirting) the following additional requirements apply:

(a) The rated speed shall not exceed 0.5 m/s; the nominal width of the steps, pallets or the belt z_1 shall be at least 800 mm.
(b) The distance l_2 between projection of the comb intersection line and the point at the newel where the handrails change their direction of movement shall be at least 1.20 m.

At the landings of the escalator and passenger conveyor, a sufficient unrestricted area shall be available to accommodate passengers. The width of the unrestricted area shall at least correspond to the distance between the handrail centrelines (see l_1 in figure 3.1). The depth shall be at least 2,50 m, measured from the end of the balustrade. It is permissible to reduce it to 2,00 m if the width of the unrestricted area is increased to at least double the distance between the handrail centrelines. Attention is drawn to the fact that this free area has to be considered as part of the whole traffic function and, thus, needs sometimes to be increased.

In the case of successive escalators and passenger conveyors without intermediate exits, they shall have the same theoretical capacity.

The landing area of escalators and passenger conveyors shall have a surface that provides a secure foothold for a minimum distance of 0.85 m measured from the root of the comb teeth.

The clear height above the steps of the escalator or pallets or belt of the passenger conveyor at all points shall be not less than 2.30 m (see h_4 in figure 3.1).

Where building obstacles can cause injuries, appropriate preventive measures shall be taken.

In particular, a floor intersections and on criss-cross escalators or passenger conveyors, a vertical obstruction of not less than 0,30 m in height, not presenting any sharp cutting edges shall be placed above the balustrade decking, e.g. as an imperforate triangle (see h_5 in figure 3.1). It is not necessary to comply with these requirements when the distance b_9 between the centreline of the handrail and any obstacle is equal to or greater than 0.50 m.

38. *Supporting structure of the escalator or passenger conveyor*

The supporting structure shall be designed in such a way that it can support the dead weight of the escalator or passenger conveyor plus a passenger weight of 5000 N/m^2 [load carrying area = nominal width z_1 of the escalator or passenger conveyor $\times$ distance between supports l_1 (see figure 3.1)]. An impact factor shall not be added to the passenger load.

Based on passenger weight, the maximum calculated or measured deflection shall not exceed 1/750 of the distance between supports l_1.

39. *For public service escalators and public service passenger conveyors*

Based on passenger load, the maximum calculated or measured deflection shall not exceed 1/1000 of the distance between supports l_1.

40. *Lighting*

The escalator or passenger conveyor and its surrounds shall be sufficiently and adequately illuminated, especially in the vicinity of the combs.

It is permissible to arrange the lighting in the surrounding space or at the installation itself. The intensity of illumination at the landings including the combs, shall be related to the intensity of illumination of the general lighting in the area. On indoor escalators or passenger conveyors the intensity of illumination shall be not less than 50 lx at the landings; on outdoor escalators or passenger conveyors it shall be not less than 15 lx at the landings, measured at floor level.

41. *Machinery spaces*

General

Driving and return stations, machinery spaces inside the truss, as well as separate machinery spaces, shall not be accessible to unauthorised persons.

These rooms shall be used only for accommodating the equipment necessary for the operation of the escalator or passenger conveyor.

Fire alarm systems, equipment for direct fire abatement and sprinkler heads, provided they are sufficiently protected against incidental damage, are permitted in these rooms. Lift driving equipment is also permitted in these rooms.

42. *Accessibility*

Ways and access routes to machinery spaces shall be easy and safe.

The clear height of the access shall be at least 1.80 m.

It is preferable that authorised personnel obtain access to inspection doors and trap doors, separate machinery spaces, separate driving and return stations by means of stairs only. Where stairs are difficult to install, it is permitted to use ladders that satisfy the following conditions:

(a) They shall be not liable to slip or to turn over.
(b) They shall, when in position of use, form an angle of 65° to 75° to the horizontal, unless they are fixed and their height is less than 1.50 m.
(c) On vertical ladders up to a maximum height of 1.5 m, the distance between the rugs and the walls behind shall be at least 0.15 m.
(d) They shall be exclusively used for this purpose and be kept always available in the vicinity; the necessary provisions shall be made for that purpose.
(e) At the upper part of the ladder there shall be one or more handhold(s) within easy reach.
(f) When the ladders are not fastened, fixed attachment points shall be provided.

43. *Construction and equipment of machinery spaces, driving and return stations*

General

In machinery spaces and return stations, space with a sufficiently large standing area shall be kept free from fixed parts of any kind. The size of the standing area shall be at least 0.30 m^2 and the smaller side shall be at least 0.50 m long.

Where the main drive or brake is arranged between the passenger side of the step, pallet or belt and the return line, a suitable approximately horizontal standing area in the working zone of not less than 0.12 m^2 shall be provided. The minimum dimension shall be not less than 0.30 m.

This part is permitted to be fixed or removable. In the latter case, it shall always be available in the vicinity. Necessary provisions shall be made for this purpose.

The size of separate machinery spaces, separate driving and return stations, and the space in front of fixed control panel shall be sufficient to permit easy and safe access for maintenance personnel to all the equipment, especially to the electrical connections.

In particular there shall be provided:

(a) a free space above an area of the full width of the control panels or cabinets (but not less than 0.50 m) and 0.80 m in depth, to give access to the equipment they support or contain;
(b) a free space above an area of at least 0.50 m × 0.60 m for maintenance and inspection of moving parts at end points where this is necessary;
(c) access routes, having a width of at least 0.50 m, to these free spaces.

44. *Driving machine*

General

Each escalator and each passenger conveyor shall be driven by at least one machine of its own.

(a) *Speed*

The rated speed of the escalator shall not exceed:

- 0.75 m/s for an escalator with an angle of inclination α up to 30°;
- 0.50 m/s for an escalator with an angle of inclination α of more than 30° up to 35°.

The rated speed of passenger conveyors shall not exceed 0.75 m/s.

The passenger conveyors are permitted to have a maximum rated speed of 0.90 m/s provided that the width of the pallets or the belt does not exceed 1.10 m, and that, at the landings, the pallets or the belt move horizontally for a length of at least 1.60 m before entering the combs.

They do not apply to passenger conveyors with acceleration paths or passenger conveyor systems with direct transition to passenger conveyors travelling at different speeds.

45. *Angle of inclination of the escalator and passenger conveyor and guiding of the steps, pallets and belt*

Angle of inclination position of the steps
The angle of inclination α of the escalator shall not exceed 30°, but for rises not exceeding 0.50 m/s the angle of inclination is permitted to be increased up to 35°.

The angle of inclination of passenger conveyors shall not exceed 12°.

The step treads shall be approximately horizontal in the usable area of the escalator.

At the landings, the steps of the escalator shall be guided in such a way that the front edges of the steps leaving the comb and the rear edges of the steps entering the comb are moving horizontally for a length of at least 0.80 m measured from point L_1 (see Fig. 3.1 and 3.2).

A vertical difference in level between two consecutive steps of 4 mm maximum is permitted.

At rated speeds above 0.50 m/s or rises above 6 m, this length shall be at least 1.20 m, measured from point.

For escalators, the radius of curvature in the upper transition from incline to horizontal shall be:

- at least 1.00 m for rated speed $\upsilon \leq 0.5$ m/s;
- at least 1.50 m for rated speed $\upsilon > 0.5$ m/s.

The radius of curvature in the lower transition from incline to horizontal of the escalator shall be at least 1.00 m, irrespective of the rated speed.

For belt passenger conveyors, the radius of curvature in the transition from incline to horizontal shall be at least 0.40 m.

For pallet passenger conveyors, it is not necessary to determine the radius of curvature because on account of the maximum permissible distance between two consecutive pallets it will always be sufficiently large.

46. *Braking system*

Escalators and passenger conveyors shall have a braking system by means of which they can be brought to rest with a largely uniform declaration and maintained stationary (operational braking);

(a) *Brake load and stopping distances for operational brake.*
(b) *Determination of brake load for escalators.*

Per step and at a nominal width z_1 of:

– up to 0.6 m	60 kg
– more than 0.6 m up to 0.8 m	90 kg
– more than 0.8 m up to 1.1 m	120 kg

shall be applied.

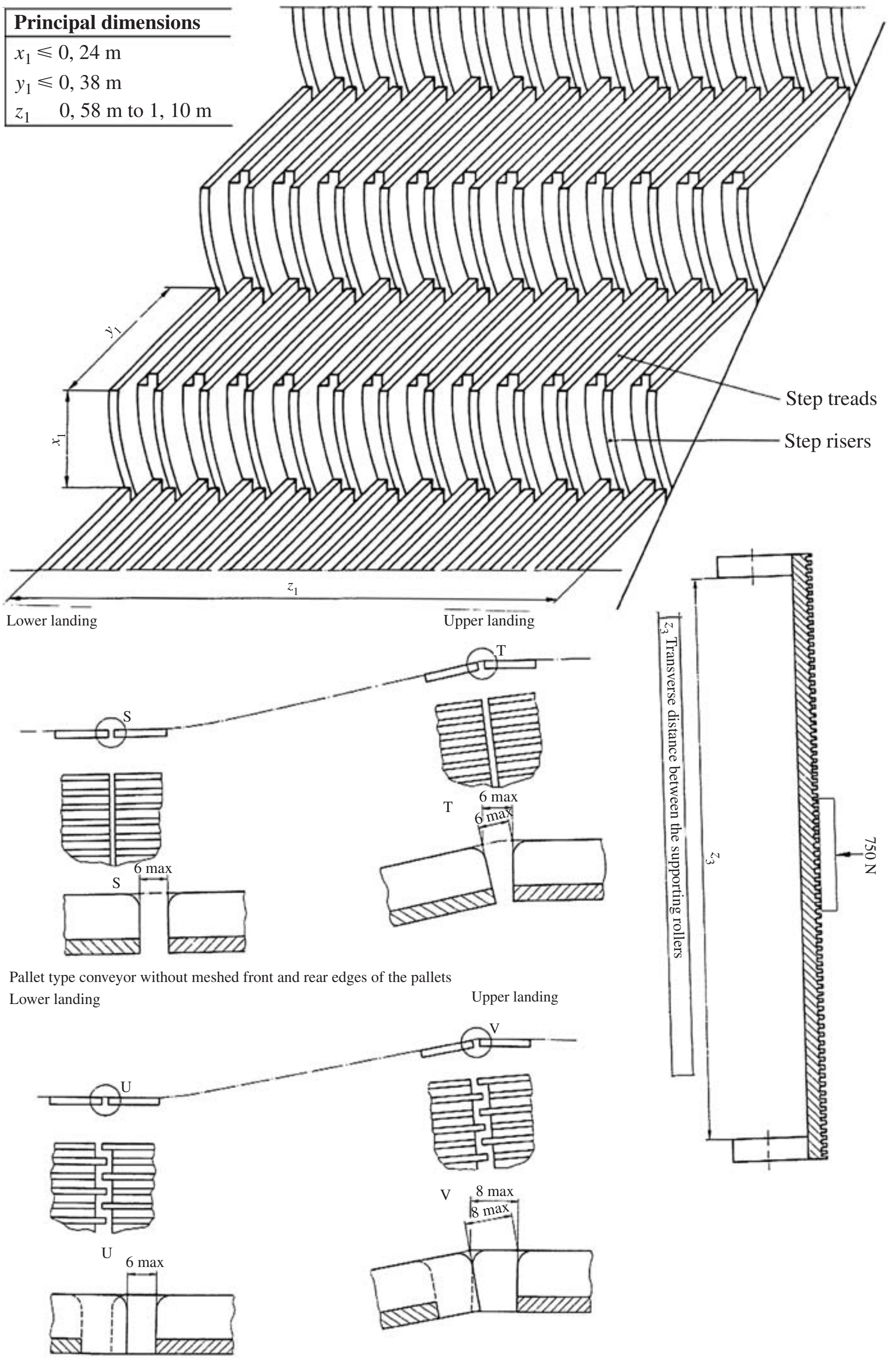

Pallet type passenger conveyor with meshed front and rear edges of the pallets
The construction does not have to correspond to the drawing: only the indicated dimensions have to be observed
Dimensions in millimetres

Figure 3.2. Pallets, clearance and mesh depth (With compliments from BSI, London and ASME, Newyork).

(c) *Stopping distances of the escalator.*

The stopping distances for unloaded and downward moving loaded escalators shall be between the following values.

Rated speed m/s	Stopping distance between (m)	
	Minimum	Maximum
0.50	0.20	1.00
0.65	0.30	1.30
0.75	0.35	1.50

(d) *Determination of the brake load for designing the brake for passenger conveyors*

Per 0.4 m length and at a nominal width z_1 of the pallets or the belt of:

- up to 0.6 m 50 kg
- more than 0.6 m up to 0.8 m 75 kg
- more than 0.8 m up to 1.1 m 100 kg

shall be applied. (Section 3.4 gives formulations for breaking loads on escalators).

In the case where passenger conveyors with an angle of inclination of up to 6° have nominal widths larger than 1.1 m, another 25 kg per 0.4 m length shall be applied for each additional 0.3 m width.

(e) *Stopping distances for passenger conveyors*

The stopping distances for unloaded and horizontally or downward moving loaded passenger conveyors shall be between the following values.

Rated speed m/s	Stopping distance between (m)	
	Minimum	Maximum
0.50	0.20	1.00
0.65	0.30	1.30
0.75	0.35	1.50
0.90	0.40	1.70

For intermediate speeds, the stopping distances are to be interpolated.

The stopping distances shall be measured from the time the electric stopping device is actuated.

For passenger conveyors, a brake test under no load will be sufficient.

For loaded passenger conveyors, the manufacturer shall prove the stopping distances by calculation.

47. *Auxiliary brake for the non-friction part for the driving system for steps and pallets or the belt*

Escalators and inclined passenger conveyors shall be equipped with auxiliary brake(s) acting immediately on the non-friction part of the driving system for the steps, pallets or the belt (one single chain is not considered to be a non-friction part), if:

(a) the coupling of the operational brake and the driving wheels of the steps, pallets or the belt is not accomplished by shafts, gear wheels, multiplex chains, or two or more single chains; or
(b) the operational brake is not an electro-mechanical brake
(c) the rise exceeds 6 m.

The auxiliary brake shall be dimensioned in such a way that escalators and passenger conveyors travelling with brake load downward are brought to rest by effective retardation and maintained stationary. Auxiliary brakes shall be of the mechanical (friction) type.

The auxiliary brake shall become effective in either of the following conditions:

(a) before the speed exceeds a value of 1,4 times the rated speed;
(b) by the time the steps and pallets or the belt change from the present direction of motion.

3.4 RATED LOADS ON ESCALATORS

The rated loads indicated in the Technical Specifications given by OTIS must also be adhered to:

(*SI Units*)

Machinery rated load (kg) = 0.21 (W + 203)B_2

where

B_1 = cot ϕ × total escalator rise, ft (m)
B_2 = cot ϕ × rise per module, ft (m)
ϕ = the angle of inclination (see Rule 802.1)
W = width of the escalator, in. (mm) (see Rule 802.2)

Brake

(1) For the purpose of brake calculations, the rated load for all single driving machines shall be considered to be not less than:
   (a) With Escalator Stopped
      (Imperial Units)
      Brake rated load (lb) = 4.6 (W + 8)B_1
      (SI Units)
      Brake rated load (kg) = 0.27 (W + 203)B_1
   (b) With Escalator Running
      (Imperial Units)
      Brake rated load (lb) = 3.5 (W + 8)B_1
      (SI Units)
      Brake rated load = 0.21 (W + 203)B_1
(2) The rated load per module for two or more modular driving machines shall be considered to be not less than:
   (a) With Escalator Stopped
      (Imperial Units)
      Brake rated load (lb) = 4.6 (W + 8)B_2
      (SI Units)
      Brake rated load = 0.27 (W + 203)B_2
   (b) With escalator Running
      (Imperial Units)
      Brake rated load (lb) = 3.5 (W + 8)B_2
      (SI Units)
      Brake rated load = 0.21 (W + 203)B_2

where

B_1 = cot ϕ × total escalator rise, ft (m)
B_2 = cot ϕ × rise per module, ft (m)
ϕ = the angle of inclination (see Rule 802.1)
W = width of the escalator, in. (mm) (see Rule 802.2)

Step. The step shall be designed to support a load of 300 lb (136 kg) on a 6 in. (152 mm) plate placed on any part of the step with the 10 in. (254 mm) dimension in the direction of step travel.

48. *Handrails*
In the constant speed zones of accelerating moving walks, each moving handrail shall move in the same direction and at substantially the same speed as the treadway.

In accelerating or decelerating zones, one of the following handrail operations shall be provided:

(a) A variable speed handrail which moves at substantially the same speed as the immediately adjacent treadway; or
(b) A multiplicity of constant speed handrails at locations where the treadway is either accelerating or decelerating. The handrail installations shall not require passengers to move their hands from one handrail to anothermore often than once every 2 sec. Each moving handrail shall move at a speed so that its maximum displacement shall not differ from a reference point on the treadway by more than 16 in. (406 mm).
(c) Moving handgrasps may be used in lieu of a continuous handrail provided that they conform to the following:
    (1) The space on top of the balustrade in which the individual handgrasps travel shall be designed to prevent entrapment.
    (2) Adjacent handgrasps shall have a clear space of no less than 4 in. (102 mm) between them at their point of closest approach.
    (3) Handgrasps shall have no sharp corners.

3.5 STRUCTURAL ANALYSIS OF ESCALATORS – PARAMETERS AND LOADINGS

The following parameters and loadings are considered:

(1) The incline travel distance (Li) is given by:

$$Li = \frac{R}{\sin \phi} \text{ (m)} \tag{3.1}$$

(2) The step chain length (stl) is given by:

$$stl = (\pi \times d_d) + 2(Lhb + Lha + Li) \text{ (m)} \tag{3.2}$$

(3) The time (t_e) for a passenger to ride an escalator is given by:

$$t_e = \frac{Lhb + Lha + Li}{\nu} \text{ (s)} \tag{3.3}$$

(4) The passenger loading (P_l) on an escalator may be estimated by:

$$P_l = M \times P_s \times VS(kg) = M \times P_s \times VS \times 9.81 \text{ (N)} \tag{3.4}$$

(5) The input power requirements (P_i) for an escalator is given by:

$$\frac{\nu St}{\eta} \times \frac{H}{h} \sin \phi \text{ (W)} \tag{3.5}$$

where:
η : is the efficiency
ϕ : is the angle of inclination (degrees)
d_d : is the diameter of the drive and return wheels (m)
h : is the step height (m)
R : is the rise between landings (m)
Lhb : is the horizontal distance at the boarding point (m)
Lha : is the horizontal distance at the alighting point (m)

Li : is the incline travel distance (m)
M : is the typical weight if a passenger (kg)
P_s : number of persons per steps
St : is the step load (N)
VS : number of visible steps
v : is the rated speed (m/s)

Notes:
when calculating traffic handling capacities and step loadings assume:
1.0 person/step for 600 mm steps;
1.5 persons/step for 800 mm steps and
2.0 persons/step for 1000 mm steps.

The actual traffic handling capacity of an escalator is generally taken as half the theoretical values.

3.6 THE FINITE ELEMENT ANALYSIS OF ESCALATORS STEPS

Appendix III gives the complete finite element analysis relevant to lifts, escalators and walkways or travelators.

3.7 TRAVELATORS OR MOVING WALKWAYS

3.7.1 *Introduction*

Travelators or moving walkways have identical infrastructure to escalators and the only difference is that the steps are suppressed in case of travelators making the surface smooth as a high volume passenger transport designers for distances up to 200 m. They are ideal for airports, exhibition halls and congress centres etc; easily accommodating around 1400 passengers per hour. They can be a flat construction over lengthy outdoor stretches. These moving walkways are also inclined from 0° to 6°. For example a flat construction type has no truss and is only 400 mm high in its central part – a great advantage when space is at a premium. They are noted as series 9500-40 to 9500-45. The continuous truss with a height of 500 mm makes the model the right choice for installation on interrupted building foundations. The internal mechanism in comparison to escalators has been adjusted so that steps are not rising but assume their level surface during the travel of moving walkways. Plate 3.11 gives a typical machinery layout of the Drive Station. Plate 3.10 gives horizontal and inclined types of auto walk (moving walkways).

3.7.2 *Machinery*

The following requirements are in addition to those specified.

On the high speed sections of accelerating moving walks, the rated load shall be not less than 50/N measured in lb/ft^2 (2.39/N measured in kPa) of exposed treadway where N is the ratio between the exposed surface area of any treadway element in the high speed zone and its exposed surface area in the boarding zone; however, the connections from each treadway member to its drive shall be designed to move a rated load of 50 lb/ft^2 (2.39 kPa) of exposed treadway.

3.7.3 *Speed, acceleration, and maximum rate of change of acceleration*

Treadway speed, acceleration, and maximum rated of change of acceleration shall conform to the following:

(a) *Speed.*
The entrance and exit speeds of a treadway shall not exceed 180 ft/min (0.91 m/s) and shall not vary by more than 5% of the entrance or exit speed for a distance of at least 3 ft (910 mm) from the entrance and exit combplates.

The maximum treadway speed shall not exceed 900 ft/min (4.57 m/s).

Layout of Autowalk Horizontal Type

(Interior Panel : Frame or Panel Type)

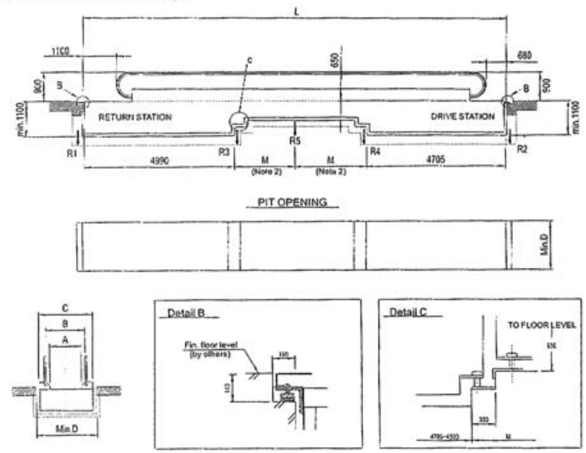

A	800	1000
B	1110	1310
C	1400	1600
D	1460	1660

otes :
The autowalk corresponds to European standard EN-115.
MAX M is 9000mm

Reactions (KN)

A	800	1000
R1	28	31
R2	32	36
R3	25+M/0.41	28+M/0.36
R4	26+M/0.38	29+M/0.34
R5	M/0.18	M/0.16

Note : M is in meters.

Layout of Autowalk Inclined Type

(Interior Panel : Frame or Panel Type)

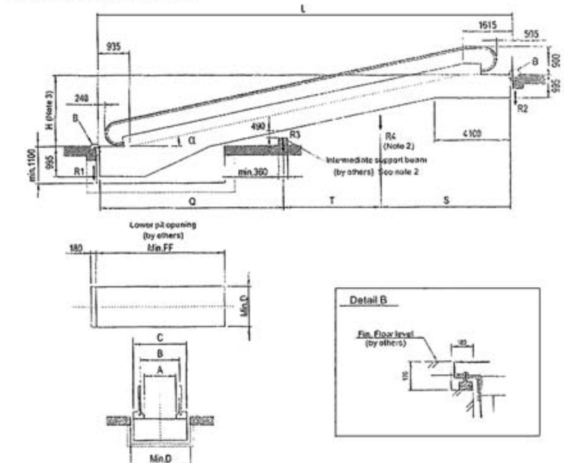

A	800	1000
B	1110	1310
C	1400	1600
D	1460	1660
F	15000	14000
G	30000	28000

α	L	FF
10°	(H+17)×5.6713+2550	4600
12°	(H−17)×4.7046+2550	4000

Notes :
1) The autowalk corresponds to European standard EN-115.
2) If L>F, L≦G, one intermediate support shall be required. If L>G, two intermediate support shall be required.
3) MAX. H is 6000mm.

Reactions 1 (IN CASE OF T=0)

A	800	1000
R1	3.9Q+4.5	4.5Q+5
R2	3.9S+9.5	4.5S-11
R3	5.07L	5.85L

Note : L,Q,S are in meters.

Reactions 2 (IN CASE OF T≠0)

A	800	1000
R1	3.9Q+4.5	4.5Q+5
R2	3.9S+9.5	4.5S+11
R3	5.07 (Q+T)	5.85 (Q+T)
R4	5.07 (S+T)	5.85 (S+T)

Note : L,Q,S,T are in meters.

Plate 3.10. Horizontal and Inclined Types Autowalk Fujetech Co. Japan.

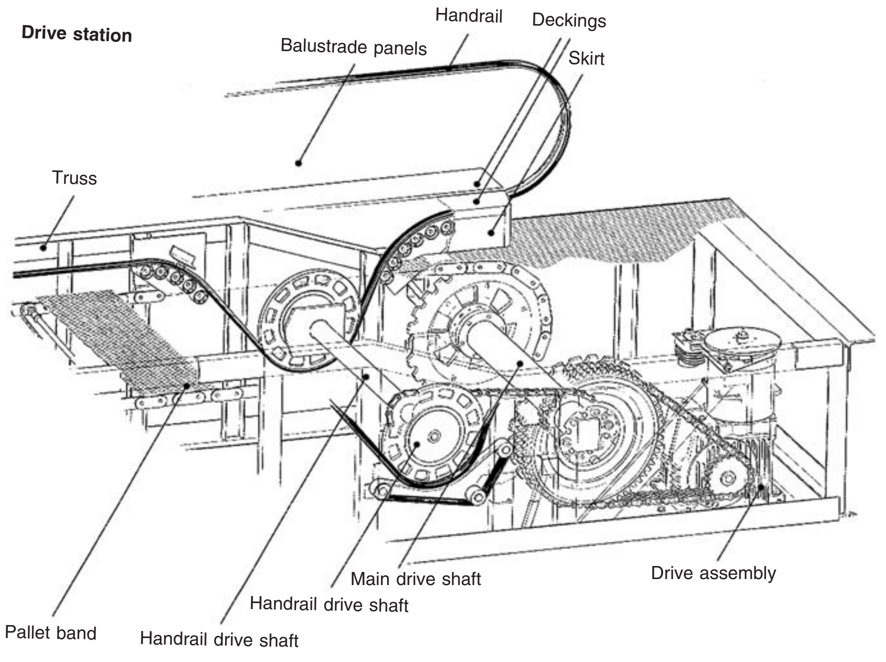

Plate 3.11. Travelators drive mechanism.

(b) *Maximum acceleration and deceleration*.
The level of acceleration and deceleration under normal operating conditions in the accelerating and decelerating zones shall be determined by the following formulas:

$$a = (0.10 - \sin\theta)g \tag{3.6}$$

$$d = (0.10 - \sin\theta)g \tag{3.7}$$

where
a = maximum allowable acceleration (shown as a positive number), ft/sec^2 (m/s^2)
d = maximum allowable deceleration (shown as a negative number), ft/sec^2 (m/s^2)
g = acceleration due to gravity
θ = angle the treadway makes with the horizontal plane in the accelerating or decelerating zone (downward travel is considered a negative angle)

(c) Maximum rate of change of acceleration and deceleration.
The maximum rate of change of acceleration or deceleration shall be not more than 3 ft/sec^3 (0.91 m/sec^3).

3.7.4 *Treadways*

When treadways change configuration or spatial relationship of their components, they shall be designed to minimize hazards. If the balustrade covers the edge of the treadway and if the exposed portions of the treadway surface move under the balustrade, means shall be provided to cause the opening of the power circuit to the treadway driving machine and to the brake, if so equipped, should an object become wedged between the treadway and the underside of the balustrade.

3.7.5 *Emergency stopping, d_E*

Under emergency stopping conditions, the total deceleration to which a passenger is subjected shall not exceed the value given by the following formula:

$$d_E = \text{deceleration} = (0.25 + \sin\theta)g$$

where $\theta =$ the angle the treadway makes with the horizontal plane. Ascending direction implying a positive angle and descending direction implying a negative angle.

3.7.6 *Balustrade*

With particular system of balustrades, various manufacturers provide details such as heights, truss in drive and reverse station, inclination, pallet width, motor rating table, loads and structural detailing of various installation areas. Plate (3.12–3.15) give the summary of Schindler 9500 Type 15, 35, 45 and 55.

3.8 ROUTINE INSPECTION AND TESTS OF ESCALATORS AND MOVING WALKS

3.8.1 *Inspection and test periods*

Routine inspections and tests of escalators and moving walks shall be made at intervals not longer than 6 months.

3.8.2 *Inspection and test requirements*

Routine inspections and tests shall include the following:

(a) General fire protection
(b) Geometry
(c) Handrails
(d) Entrance and egress
(e) Lighting
(f) Caution signs
(g) Combplate
(h) Deck barricade
(i) Steps and treadway
(j) Operating devices
(k) Skirt obstruction devices
(l) Stopped handrail device
(m) Rolling shutter device
(n) Speed
(o) Balustrades
(p) Ceiling intersection guards
(q) Skirt panels
(r) Outdoor protection

3.8.3 *Periodic inspection and tests of escalators and moving walks/travelators/autowalks*

(a) *Inspection and test periods*
In addition to the routine, inspection and test shall be performed at intervals not longer than 1 year.
(b) *Machine space*
The machine space access, receptacles, operation, and conditions shall be inspected.
(c) *Stop switch*
The machine space stop switches shall be tested.

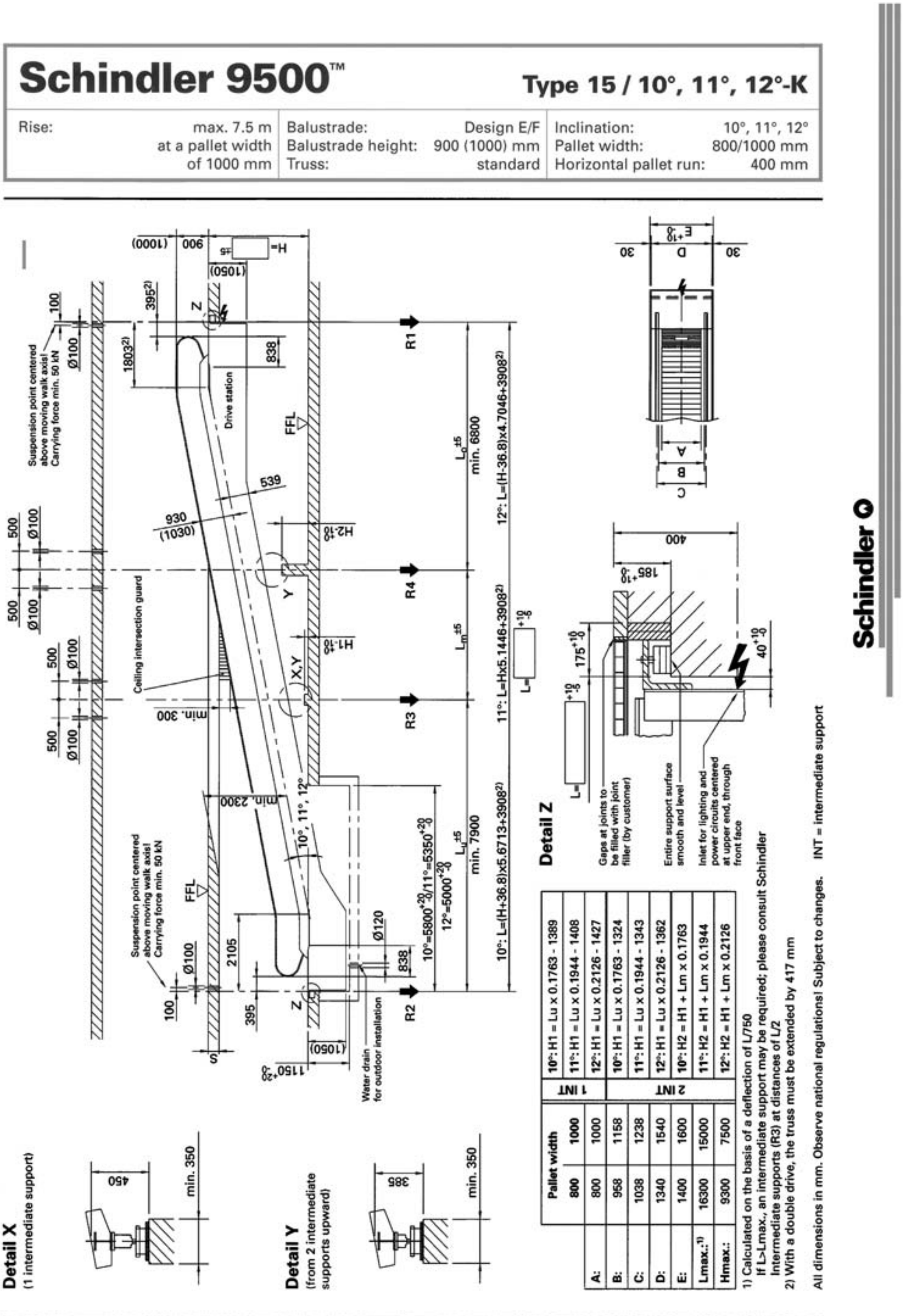
Schindler 9500™
Type 15 / 10°, 11°, 12°-K
Rise: max. 7.5 m at a pallet width of 1000 mm
Balustrade: Design E/F
Balustrade height: 900 (1000) mm
Truss: standard
Inclination: 10°, 11°, 12°
Pallet width: 800/1000 mm
Horizontal pallet run: 400 mm
Detail X
(1 intermediate support)
Detail Y
(from 2 intermediate supports upward)
Detail Z
Suspension point centered above moving walk axis! Carrying force min. 50 kN
Ceiling intersection guard
Drive station
Water drain for outdoor installation
Gaps at joints to be filled with joint filler (by customer)
Entire support surface smooth and level
Inlet for lighting and power circuits centered at upper end, through front face
10°: L=(H+36.8)x5.6713+3908
11°: L=Hx5.1446+3908
12°: L=(H-36.8)x4.7046+3908
Pallet width 800 1000
A: 800 1000
B: 958 1158
C: 1038 1238
D: 1340 1540
E: 1400 1600
Lmax.: 16300 15000
Hmax.: 9300 7500
1 INT
10°: H1 = Lu x 0.1763 - 1389
11°: H1 = Lu x 0.1944 - 1408
12°: H1 = Lu x 0.2126 - 1427
2 INT
10°: H1 = Lu x 0.1763 - 1324
11°: H1 = Lu x 0.1944 - 1343
12°: H1 = Lu x 0.2126 - 1362
10°: H2 = H1 + Lm x 0.1763
11°: H2 = H1 + Lm x 0.1944
12°: H2 = H1 + Lm x 0.2126
1) Calculated on the basis of a deflection of L/750
If L>Lmax., an intermediate support may be required; please consult Schindler
Intermediate supports (R3) at distances of L/2
2) With a double drive, the truss must be extended by 417 mm
All dimensions in mm. Observe national regulations! Subject to changes. INT = intermediate support
Schindler

Plate 3.12(a).

Inclination	Rise	Length	Transport dimensions Balustrade height 1000						Pallet width A=800							Pallet width A=1000						
			in one part		in two parts				Weight (kN)			Reaction (kN)			Pmot	Weight (kN)			Reaction (kN)			Pmot
	H	L	h	l[3]	hu	lu	ho	lo	G	Gu	Go	R1	R2	R3	(kW) v=0.5m/s	G	Gu	Go	R1	R2	R3	(kW) v=0.5m/s
10°	2000	15459	2450	15940	-	-	-	-	84	-	-	75	70	-	5.5	83	38	45	40	34	85[4]	5.5
	2500	18295	2460	18820	2480	9360	2340	9520	86	39	47	41	32	86	5.5	92	42	50	45	37	101	5.5
	3000	21131	2460	21700	2470	10800	2360	10960	95	43	52	44	36	100	5.5	101	46	55	49	41	117	7.5
	3500	23966	2470	24580	2460	12230	2380	12400	104	48	56	47	39	113	7.5	111	51	60	53	45	132	7.5
	4000	26802	2470	27460	2460	13670	2390	13830	113	52	61	51	43	126	7.5	120	56	64	57	49	148	11
	4500	29637	2470	30330	2450	15100	2400	15270	122	57	65	55	46	140	11	138	65	73	65	56	166	11
	5000	32473	2480	32210	2450	16540	2410	16710	140	65	75	61	53	156	11	148	69	79	69	60	182	11
	5500	-	-	-	-	-	-	-	-	-	-	-	-	-	-	-	-	-	-	-	-	-
11°	2000	14197	2450	14700	-	-	-	-	79	-	-	71	65	-	5.5	84	-	-	80	75	-	5.5
	2500	16769	2460	17320	2490	8600	2320	8780	82	37	45	39	31	79	5.5	87	39	48	43	35	93	5.5
	3000	19342	2460	19930	2480	9910	2350	10090	90	41	49	42	34	92	5.5	96	44	52	47	38	107	7.5
	3500	21914	2470	22550	2470	11210	2370	11390	98	45	53	45	37	104	7.5	104	48	56	50	42	121	7.5
	4000	24486	2470	25170	2460	12520	2380	12700	106	49	57	48	40	116	7.5	113	52	61	54	46	135	11
	4500	27058	2470	27790	2460	13830	2390	14010	114	53	61	51	43	128	7.5	121	56	65	63	49	149	11
	5000	29631	2470	30410	2450	15130	2400	15320	122	61	70	55	46	140	11	139	65	74	65	56	166	11
	5500	32203	2480	33030	2450	16440	2410	16630	139	65	74	61	52	155	11	148	69	79	69	60	180	11
12°	2000	13144	2440	13660	-	-	-	-	71	-	-	64	59	-	5.5	80	-	-	76	70	-	5.5
	2500	15496	2450	16060	-	-	-	-	84	-	-	76	70	-	5.5	83	37	46	41	33	86	5.5
	3000	17849	2460	18460	2490	9170	2340	9360	85	38	47	40	32	84	5.5	91	41	50	45	36	99	7.5
	3500	20201	2460	20870	2470	10360	2350	10560	93	42	51	43	35	96	7.5	99	45	54	48	40	112	7.5
	4000	22553	2470	23270	2470	11560	2370	11760	100	46	54	46	37	107	7.5	106	49	57	51	43	125	11
	4500	24906	2470	25680	2460	12760	2380	12960	107	49	58	49	40	118	7.5	114	53	61	55	46	138	11
	5000	27258	2470	28080	2460	13960	2390	14170	115	53	62	52	43	129	11	122	57	65	58	50	150	11
	5500	29610	2470	30480	2450	15160	2400	15370	122	57	65	55	46	140	11	139	65	74	65	56	166	11

3) l: max. transport length 17 m!
4) Distance between intermediate supports on request!

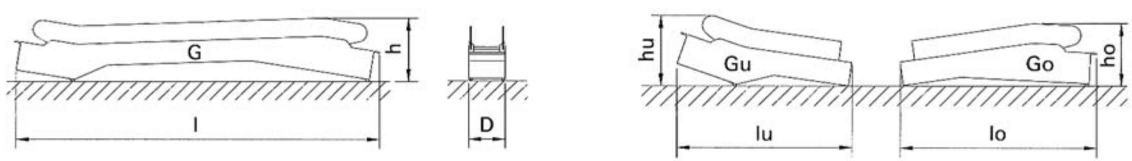

Plate 3.12(b).

Schindler 9500™

Type 35

Length: max. 100 m at an inclination of 0°	Balustrade: Design E/F Balustrade height: 900 mm Truss in drive and reversing station only	Inclination: 0° - 6° Pallet width: 800/1000 mm

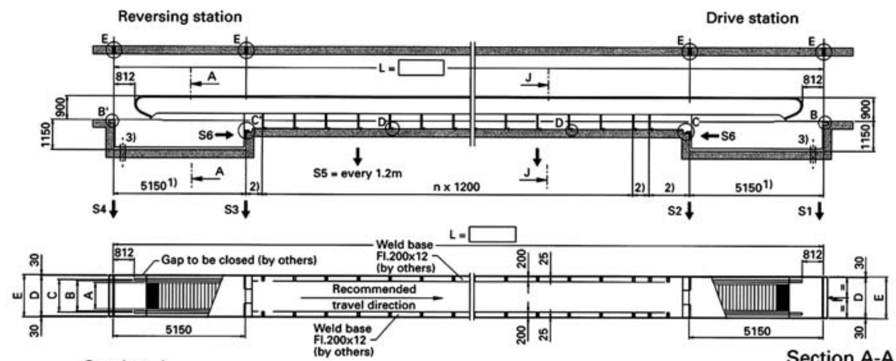

Detail E

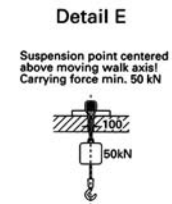

	Pallet width	
	800	1000
A:	800	1000
B:	958	1158
C:	1038	1238
D:	1340	1540
E:	1400	1600

Section J / **Detail D** / **Detail B** (Detail B' mirror way) / **Detail C** (Detail C' mirror way)

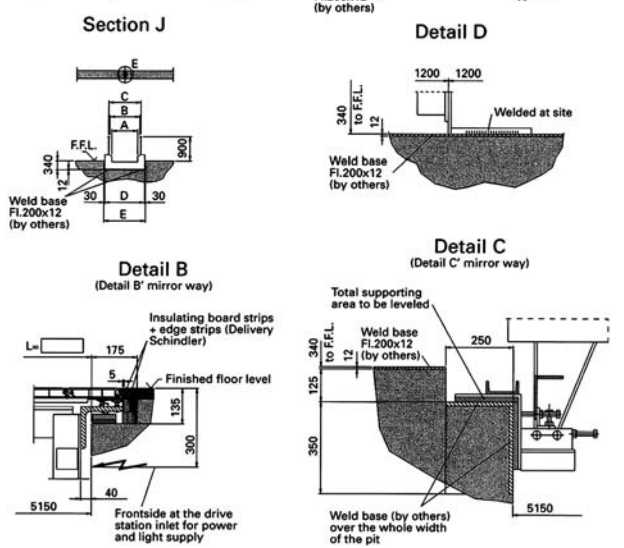

Section A-A

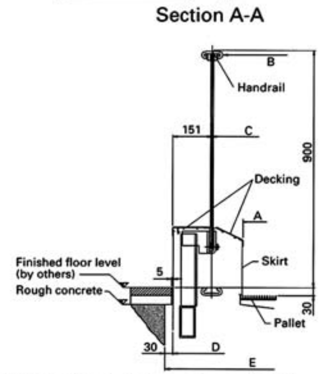

Max. reactions on the supports[4]

Pallet width (mm)	800	1000
S1	28	32
S2	28	33
S3	27	31
S4	22	26
S5	7.5	9
S6	29	35

Motor rating table: values for horizontal installation

v (m/s)	0.5		0.65	
A (mm)	800	1000	800	1000
Rating (kW)	Maximum length (m)			
1 x 5.5	66	56	50	42
1 x 7.5	92	78	70	59
1 x 11	100	92	100	88
1 x 15	-	100	-	100

1) Standard length: 5150 mm. Range: min. 4705 mm - max. 7000 mm
2) Depending on project.
3) For outdoor installations a water drain shall be provided over the entire length of the concrete pit (by others).
4) The reactions on supports S 1 and S 4 are equally distributed over the width of the moving walk, whereas the reactions on supports S 2, S 3, S 5 and S 6 are equally distributed among the supports on the left and right side. With a double drive, the reaction of support S 1 shall be increased by 5 kN.

Dimensions in mm. Loads in kN. Observe national regulations! Subject to changes. Please consult Schindler!

Schindler

Plate 3.13.

Schindler 9500™

Type 45

Length: max. 150 m at 0° Inclination	Balustrade: Design P Balustrade height: 900 mm Truss in drive and reversing station only	Inclination: 0° - 6° Pallet width: 1000/1200/1400 mm

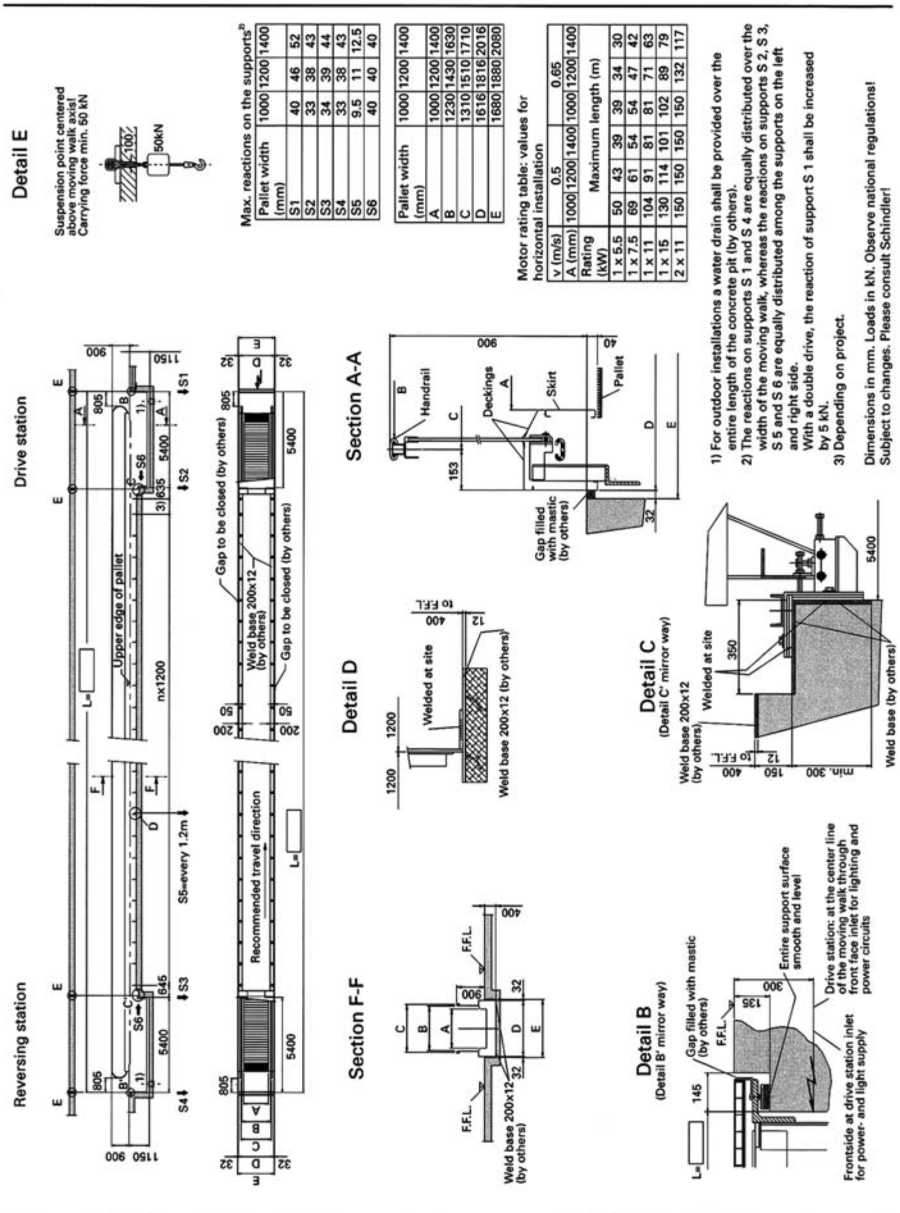

Max. reactions on the supports[2)]

Pallet width (mm)	1000	1200	1400
S1	40	46	52
S2	33	38	43
S3	34	39	44
S4	33	38	43
S5	9.5	11	12.5
S6	40	40	40

Pallet width (mm)	1000	1200	1400
A	1000	1200	1400
B	1230	1430	1630
C	1310	1510	1710
D	1616	1816	2016
E	1680	1880	2080

Motor rating table: values for horizontal installation

v (m/s)	0.5			0.65		
A (mm)	1000	1200	1400	1000	1200	1400
Rating (kW)	Maximum length (m)					
1 x 5.5	50	43	39	39	34	30
1 x 7.5	69	61	54	54	47	42
1 x 11	104	91	81	81	71	63
1 x 15	130	114	101	102	89	79
2 x 11	150	150	150	150	132	117

1) For outdoor installations a water drain shall be provided over the entire length of the concrete pit (by others).
2) The reactions on supports S 1 and S 4 are equally distributed over the width of the moving walk, whereas the reactions on supports S 2, S 3, S 5 and S 6 are equally distributed among the supports on the left and right side.
With a double drive, the reaction of support S 1 shall be increased by 5 kN.
3) Depending on project.

Dimensions in mm. Loads in kN. Observe national regulations!
Subject to changes. Please consult Schindler!

Schindler

Plate 3.14.

Schindler 9500™ — Type 55

Length: max. 100 m at 0° Inclination	Balustrade: Design P Balustrade height: 900 mm Truss in Drive- and Reversing station	Inclination: 0° - 6° Belt width: 1000/1200/1400 mm

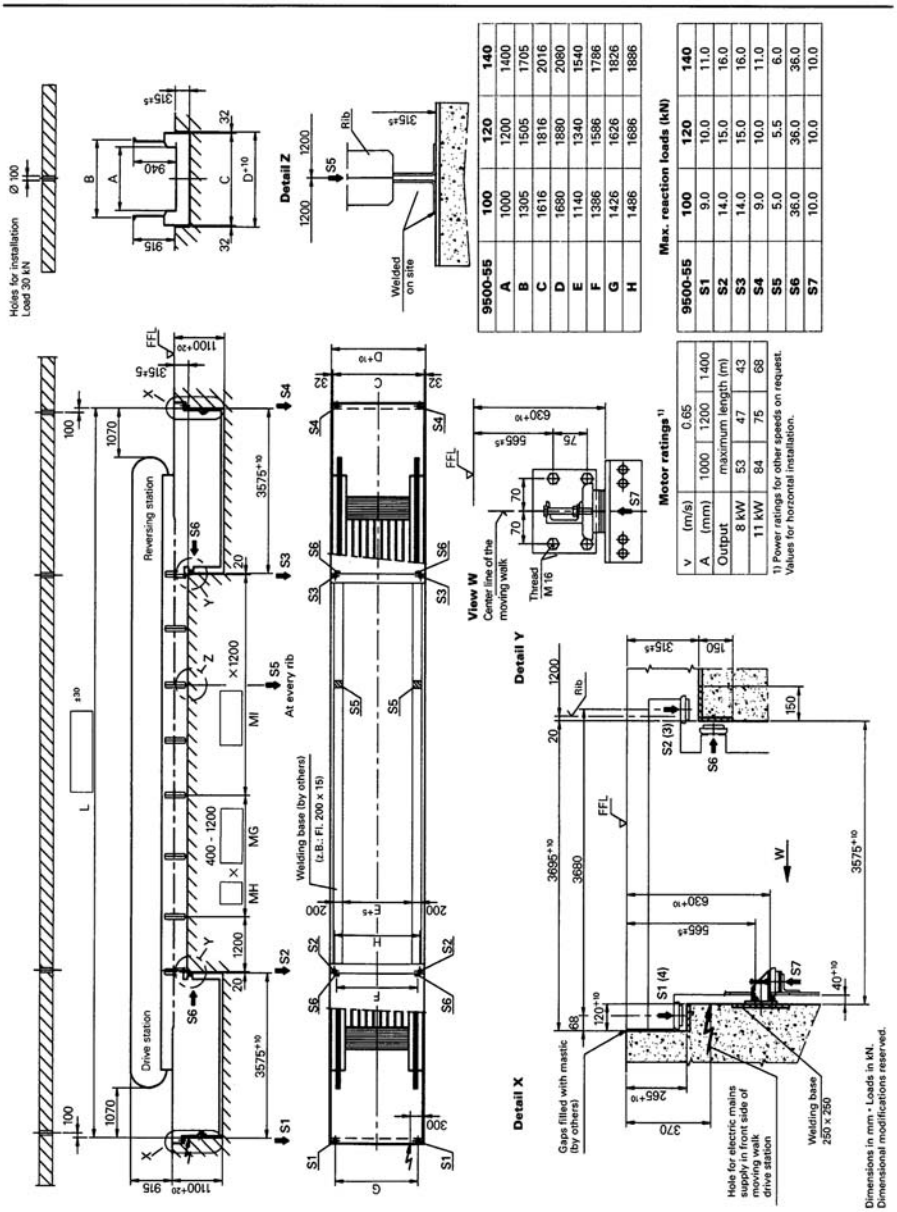

9500-55	100	120	140
A	1000	1200	1400
B	1305	1505	1705
C	1616	1816	2016
D	1680	1880	2080
E	1140	1340	1540
F	1386	1586	1786
G	1426	1626	1826
H	1486	1686	1886

Max. reaction loads (kN)

9500-55	100	120	140
S1	9.0	10.0	11.0
S2	14.0	15.0	16.0
S3	14.0	15.0	16.0
S4	9.0	10.0	11.0
S5	5.0	5.5	6.0
S6	36.0	36.0	36.0
S7	10.0	10.0	10.0

Motor ratings [1]

v (m/s)	0.65		
A (mm)	1000	1200	1400
Output	maximum length (m)		
8 kW	53	47	43
11 kW	84	75	68

1) Power ratings for other speeds on request. Values for horizontal installation.

Plate 3.15.

(d) *Controller and wiring*
Controller and wiring shall be inspected.

(e) *Drive machine and brake*
The drive machine and brakes shall be inspected and tested including test of the brake torque.

(f) *1008.2e speed governor*
The mechanical speed governor, if required, shall be tested by manually operating the trip mechanism.

(g) *Broken Drive Chain Switch and Disconnected Motor Safety Device*
Operation of the broken drive chain device, on the drive chain, shall be tested by manually operating the actuating mechanism.

(h) *Reversal Stop Switch*
The reversal stop switch, (to prevent reversal when operating in the ascending direction), shall be tested by manually operating it to determine that it functions properly.

(i) *Broken Step Chain or Treadway Device*
The broken or slack step chain or treadway device shall be inspected and tested by manual operation.

(j) *Step upthrust device*
The operation of the step upthrust device shall be tested by manually displacing the step, causing the device to operate.

(k) *Missing step or pallet device*
The missing step or pallet device shall be tested by removing a step or pallet and verifying that the device will properly function.

(l) *Step or pallet level device*
The step, or pallet level device shall be tested by simulating an out of level step or pallet and verifying that the device functions properly.

(m) *Steps, pallet, step or pallet chain, and trusses*
The steps, pallet, step or pallet chain, and trusses shall be visually inspected for structural defects.

(n) *Handrails*
The handrails operating mechanism shall be visually inspected for condition and the stop handrail device shall be tested by disconnecting of handrail motion sensor.

(o) *Tandem operation*
When interlocked tandem operation is required, verify that an escalator or moving walk carrying passengers to an intermediate landing will stop when the escalator or moving walk carrying passengers away from the landing stops. Also, verify that the units are interlocked to run in the same direction.

(p) *Escalators and moving walks with DC motor drives*
For escalators and moving walks with DC motor drives, conduct a speed test.

(q) *Heaters*
For outdoor escalators and moving walks that require heaters, test the heaters for condition and operation.

3.8.4 *Acceptance inspection of escalators and moving walks*

(a) *Inspection and test required*
All new installations, and those on which alterations have been performed, shall be inspected and tested to determine their safety and compliance with the requirements of any code of practice before being placed in service. The inspections and tests shall include the routine.

(b) *Inspection and test requirements*
General fire protection requirements

(1) The protection of floor and wall openings shall be inspected.
(2) The protection of the trusses and machine space shall be inspected to determine conformance with the requirements.
(3) Construction requirements
Construction requirements shall be inspected to determine conformance with the requirements.
(4) Handrails
Check the location, extension, and clearance of the handrail.
(5) Lighting
Check the lighting for compliance with rules of any practice.
(6) Combplates load test
The deflection of the comb section, combplate, and landing plate assemblies shall be tested by placing a 350 lb (159 kg) weight on plate that is $7\frac{7}{8}$ in. (200 mm) by $11\frac{7}{8}$ in. (300 mm) centred on the assemblies. The $11\frac{7}{8}$ dimension shall be parallel to the direction of travel. The escalator shall be operated in both directions to verify that the assemblies do not contact any of the steps.
(7) Deck barricade
Check deck barricade for compliance.
(8) Balustrades
Check the dimensions and the construction of the balustrades for compliance with rules.
(9) Ceiling and soffit guards
Check dimensions and installation of ceiling and soffit guards for compliance with rules.
(10) Outdoor protection
Check the cover.
(11) Machine space
Check that the means of access.
(12) Stop switches
Check machine space stop switches.
(13) Controller and wiring
Check the wiring, voltage, disconnects, and installation for compliance with rules.
(14) Speed governor
Check the tripping speed for compliance with the rules of a given practice. The means of adjustment shall be sealed and a tag indicated the date of the governor test together with the name of the person of firm that performed the test shall be attached to the governor in a permanent manner.
(15) Step level and pallet level device
Test the step level device by lowering (at both ends and on each side) by lowering a step 1/8 in. and verify that it will stop the unit.
(16) Steps, pallets, chains, and trusses
Verify that the tracking system will prevent displacement of the step and pallets in the chain breaks. Inspect the interior of foreign materials such as stones, concrete, or other construction debris.
(17) Speed test
The rated speed shall be tested.

3.8.5 *Inspection and test requirements for altered installations*

An altered installations shall be inspected and tested to determine their compliance with the requirements of this ‡Code before being placed in service. The inspection and test shall include in routine 2), periodic and those specified below:

(a) Where alterations have been made to the protection of floor or wall openings, they shall be inspected for conformance with the *Rule for escalators and the *Rule for moving walks.

(b) Where alterations have been made to the exterior coverings of the trusses or machine, they shall be inspected for conformance with the *Rule for escalators and the *Rule for moving walks.
(c) Where alterations involve change in the angle of inclination or geometry of balustrades, they shall be inspected for conformance with the *Rule for escalators and the *Rule for moving walks.
(d) Where the handrails have been altered, they shall be inspected for conformance with the *Rule for escalators and the *Rule for moving walks.
(e) Where the step system or treadway system has been altered, it shall be inspected for conformance with the *Rule for escalators and the *Rule for moving walks.
(f) Where the combplates or threshold plates have been altered, it shall be inspected for conformance with the *Rule for escalators and the *Rule for moving walks.
(g) Where alterations involve the trusses, girders, or supporting structures, they shall be inspected and tested for conformance with the *Rule for escalators and the *Rule for moving walks.
(h) Where the step wheel tracks or track system is altered, they shall be inspected for conformance with the *Rule for escalators and the *Rule for moving walks.
(i) Where alterations involve changes in the rated load and/or speed, they shall be inspected and tested.
(j) Where the driving machine motor or brake are altered, they shall be inspected for conformance with the *Rule for escalators and the *Rule for moving walks.
(k) Where the operating or safety devices are altered ar added, they shall be inspected for conformance with the *Rule for escalators and the *Rule for moving walks.

‡Code: any one adopted code.
*Rule: the practice related to the type of installation of the manufacturer.

Section II

Lifts/Elevators – Planning, Analysis and Design of Components

4

Belt and rope drives

4.1 BELT DRIVE – GENERAL INTRODUCTION

The usual method of transmitting motion and power from an engine to a lift-tool is by means of flat belts running over pulleys keyed to the shafts of the engine and the lift-tool. Usually motion and power are transmitted from the engine shaft to a main shaft by belt driven pulleys. From the main shaft, power is transmitted to a secondary shaft by a pair of belt driven pulleys keyed respectively to the main and secondary shafts. From the secondary shaft – called the counter-shaft – power is carried to the machine tool across a third pair of pulleys driven by a belt. On the counter-shaft, two pulleys are arranged side by side; one is keyed and the other rides loosely on it. These are known as the fast and the loose pulleys. The pulley on the main shaft is made of sufficient width so that the connecting belt may run either on the fast or the loose pulley of the counter-shaft. When it is on the fast pulley, the counter-shaft rotates and the machine tool spindle will also rotate. When it is desired to stop the machine, the belt connecting the main and counter-shaft is shifted on from the fast pulley to the loose pulley. Now even though the loose pulley rotates, the counter-shaft does not rotate because the loose pulley is not keyed to it but is riding loosely.

The material used for flat belts is discussed later. The belt across the pulleys to be connected is initially placed in a state of tension. The pulley on the engine-shaft rotates and carries the belt with it owing to the friction between the belt and the pulley surface; the belt, in turn, drives the second pulley – again – due to friction. In a pair of pulleys connected by a belt, one of the pulley is, thus, a *driver* and the other pulley is the *driven* pulley, usually called the *follower*.

4.2 VELOCITY RATIO

Two pulleys of given diameters d_1 and d_2, with their centres at a given distance apart, may be connected by an open belt drive as in Figure (4.1) or by a crossed belt drive as shown in Figure (4.2) clockwise, the follower will also rotate clockwise, i.e., the motion is *like*. With the crossed belt drive, the motion is evidently unlike. During motion, the driving pulley tugs the belt at one end

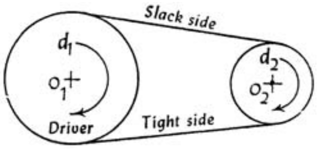

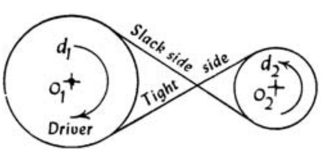

Figure 4.1. Driver and follower pulleys.

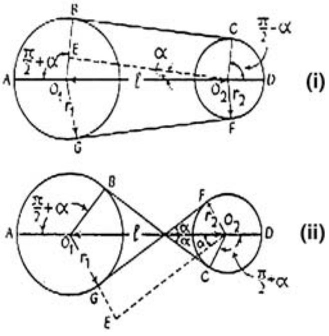

Figure 4.2. Compound belt drive.

and delivers it across at the other. One side of the belt – called the *tight* side – is therefore under greater tension than the other which is known as the *slack* side.

$$\begin{aligned}
\textit{Drivers velocity} &= n_1 \text{ for } d_1 \text{ in a rotating pulley in a belt drive} \\
\omega_1 &= \text{angular velocity} \\
&= \frac{2\pi n_1}{60} \text{ rad/sec} \qquad (4.1) \\
\psi &= \text{linear speed} \\
&= \omega_1 \frac{d_1}{2} = \omega_1 r_1 \qquad (4.2)
\end{aligned}$$

The linear speed, ψ, assuming between belt and the pulley in a belt drive perfect with no slipping occurring and belt thickness is ignored. the equation of the follower can be written as:

$$\psi = r_2\omega_2 \qquad (4.3)$$

$$\psi = r_1\omega_1 = r_2\omega_2 \qquad (4.4)$$

$$\textit{or} \qquad \frac{\omega_2}{\omega_1} = \frac{r_1}{r_2} \qquad (4.4a)$$

$$\textit{i.e.} \qquad \frac{n_2}{n_1} = \frac{d_1}{d_2}$$

Where n_2 is the velocity of a second rotating pulley in a drive. n_2/n_1 is called the velocity ratio of the rotating pulleys; in a belt drive, the speed of a pulley is inversely proportional to its diameter.

Where belt thickness 't' is considered, the linear speed 'ψ' at the centre of the belt section can be written by modifying the above equations:

$$\psi = \left(r_1 + \frac{t}{2}\right)\omega_1 = \left(r_2 + \frac{t}{2}\right)\omega_2 \qquad (4.5)$$

$$\therefore \qquad \frac{\omega_2}{\omega_1} = \frac{\left(r_1 + \frac{t}{2}\right)}{\left(r_2 + \frac{t}{2}\right)} \qquad (4.6)$$

$$\frac{n_2}{n_1} = \frac{d_1 + t}{d_2 + t} \qquad (4.7)$$

4.2.1 *Slip of belt calculating velocity ratio*

The speed of the follower n_2 is $n_1 d_1/d_2$ or $n_1(d_1+t)/(d_2+t)$ as obtained above, provided slipping between the belt and pulleys does not take place. When the belt is freshly laid on the pulleys with the proper initial tension, slip may not occur but after some time when the belt has stretched under motion, it may occur and consequently the speed transmitted to the follower will be less than the theoretical one, depending upon the percentage of slip that has occurred.

Let p_s' be the percentage of *slip between the driver* and the belt and p_s'' *the percentage slip between the belt and the follower*. The peripheral speed of the driver is $r_1\omega_1$. Owing to p_s' percentage of slip between the driver and the belt, the belt has picked up only a linear speed:

$$\psi_b = r_1\omega_1\left(1-\frac{p'}{100}\right) \tag{4.8}$$

The belt drives the follower which picks up the belt speed with a loss of p_s'' per cent. If ω_2 is the angular speed of the follower, we have,

$$\begin{aligned} r_2\omega_2 &= \psi_b\left(1-\frac{\mathrm{ps}''}{100}\right)\\ &= r_1\omega_1\left(1-\frac{p'}{100}\right)\left(1-\frac{\mathrm{ps}''}{100}\right)\\ &= r_1\omega_1\left(1-\frac{p'+\mathrm{ps}''}{100}\right), \text{ (approx.)} \end{aligned} \tag{4.9}$$

$$\textit{Putting}\quad p_s\prime + p_s'' = p_s \tag{4.10}$$

$$\textit{we get}\quad r_2\omega_2 = r_1\omega_1\left(1-\frac{p_s}{100}\right) \tag{4.11}$$

$$\textit{i.e.}\qquad \frac{n_2}{n_1} = \frac{d_1}{d_2}\left(1-\frac{p_s}{100}\right) \tag{4.12}$$

$$\textit{or}\qquad n_2 = n_1\times\frac{d_1}{d_2}\left(1-\frac{p_s}{100}\right), \text{ where } p_s \text{ is the total percentage slip during the drive.} \tag{4.13}$$

4.3 COMPOUND BELT DRIVE

The motion is transmitted from the engine shaft by means of a pulley of diameter, say d_1, to a pulley of diameter d_2 on the main shaft by a belt. A pulley of diameter d_3 on the main shaft will drive a pulley of diameter d_4 on the counter-shaft. And finally a pulley of diameter d_5 on the counter-shaft will drive a pulley of diameter d_6 on the machine. If n_1 r.p.m. is the speed of the engine-shaft, to calculate the speed of the machine.

It will be noticed that in these three pairs of belt drives, the pulleys of diameters d_1, d_3 and d_5 are drivers, while those of diameters d_2, d_4 and d_6, are the respective followers.

Taking the first drive, if n_2 is the speed of the main shaft,

$$\frac{n_2}{n_1} = \frac{d_1}{d_2} \tag{4.14}$$

D.E. 4.1 EXAMPLE ON DRIVING AND FOLLOWER PULLEYS

Data:

– Driving Pulley respectfully are:

900 mm, 600 mm and 400 mm ← DRIVERS

Following Pulleys are (respectively)

600 mm 300 mm and 250 mm ← FOLLOWERS

If the 900 mm driver on the engine shaft with n = 300 r.p.m., determine the speed of the motor shaft when 250 mm Follower is keyed.

(a) When no slip exists
(b) When slip on each drive exists of 2%.

(a) $\dfrac{n_6}{n_1} = \dfrac{d_1 d_3 d_5}{d_2 d_4 d_6}$

$$\frac{n_6}{300} = \frac{900 \times 600 \times 400}{600 \times 300 \times 250} = 4.8$$

Hence $n_6 = 4.8 \times 300 = 1440$ r.p.m.

(b) $$\frac{n_6}{300} = \frac{900 \times 600 \times 400}{600 \times 300 \times 250}\left(1 - \frac{3 \times 2}{100}\right)$$
$$= 4.8 \times 0.94$$
$$= 4.512$$

Hence $n_6 = 4.512 \times 300 = 1353.6$ r.p.m

The pulley d_3 on the main shaft drives pulley d_4 on the counter-shaft. Therefore,

$$\frac{n_4}{n_3} = \frac{d_3}{d_4} \tag{4.15}$$

Here n_4 is the speed of the counter-shaft and n_3 that of the pulley d_3 which is the same as n_2 the speed of the main shaft.

And lastly d_5 on the counter-shaft drives d_6 on the machine shaft. Therefore,

$$\frac{n_6}{n_5} = \frac{d_5}{d_6} \tag{4.16}$$

Here n_6 is the speed of the machine-shaft and $n_5 = n_4$.

Multiplying equations (4.14), (4.15) and (4.16), the following equation (4.16a) is obtained.

$$\frac{n_6}{n_5} \times \frac{n_4}{n_3} \times \frac{n_2}{n_1} = \frac{d_1 d_3 d_5}{d_2 d_4 d_6}$$
$$or \quad \frac{n_6}{n_1} = \frac{d_1 d_3 d_5}{d_2 d_4 d_6}, \tag{4.16a}$$

since $n_2 = n_3$ and $n_4 = n_5$.

The velocity ratio for the last follower and the first driver has worked out as the ratio of the product of the diameters of the followers. If there is a slip of p_1, p_2 and p_3 per cent, at each respective drive, one has now,

$$\frac{n_2}{n_1} = \frac{d_1}{d_2} \times \left(1 - \frac{p_1}{100}\right) \tag{4.17}$$

$$\frac{n_4}{n_3} = \frac{d_3}{d_4} \times \left(1 - \frac{p_2}{100}\right) \tag{4.18}$$

and $n_2 = n_3$

$$\frac{n_6}{n_5} = \frac{d_5}{d_6} \times \left(1 - \frac{p_3}{100}\right) \tag{4.19}$$

and $n_4 = n_5$.

Multiplying equations (4.17), (4.18) and (4.19), one gets

$$\begin{aligned}\frac{n_6}{n_1} &= \frac{d_1 d_3 d_5}{d_2 d_4 d_6}\left(1 - \frac{p_1}{100}\right)\left(1 - \frac{p_2}{100}\right)\left(1 - \frac{p_3}{100}\right) \\ &= \frac{d_1 d_3 d_5}{d_2 d_4 d_6}\left(1 - \frac{p_1 + p_2 + p_3}{100}\right), \text{ (approx)} \\ &= \frac{d_1 d_3 d_5}{d_2 d_4 d_6}\left(1 - \frac{p}{100}\right), \text{ where } p \text{ is the total percentage slip.}\end{aligned} \tag{4.20}$$

4.4 LENGTH OF BELT: OPEN DRIVE

Let the pulleys be of radii r_1 and r_2 respectively with their centres ℓ apart, and let them be connected by an open belt as in fig. (4.2). From O_2 drop O_2E perpendicular toO_1B and let $\angle O_1O_2E$ *be* α radiants.

$$\text{Then, } \sin\alpha = \frac{O_1E}{O_1O_2} = \frac{r_1 - r_2}{\ell} \tag{4.21}$$

The length of the belt will be,

$$L_B = 2\{\text{arc}AB + \text{arc}CD + \text{length}BC\} \tag{4.21a}$$

$$\text{Now, } \angle AO_1B = \frac{\pi}{2} + \alpha, \angle CO_2D = \frac{\pi}{2} - \alpha \tag{4.22}$$

$$\text{and length } BC = O_2E = \sqrt{O_1O_2^2 - O_1E^2} = \sqrt{\ell^2 - (r_1 - r_2)^2} \tag{4.23}$$

Therefore,

$$\begin{aligned}L_B &= 2\left\{r_1\left(\frac{\pi}{2} + \alpha\right) + r_2\left(\frac{\pi}{2} - \alpha\right) + \ell\sqrt{1 - \left(\frac{r_1 - r_2}{\ell}\right)^2}\right\} \\ &= \pi(r_1 + r_2) + 2\alpha(r_1 - r_2) + 2\ell\left\{1 - \frac{1}{2}\left(\frac{r_1 - r_2}{\ell}\right)^2\right\},\end{aligned} \tag{4.24}$$

expanding $\sqrt{1 - (r_1 - r_2/\ell)^2}$ by the abdominal theorem and, stopping at the second term, since $(r_1 - r_2/\ell)^2$ will be a small quantity and higher powers will be negligible. Also since $(r_1 - r_2/\ell)$

for α, the expression for L_B becomes,

$$L_B = \pi (r_1 + r_2) + \frac{2(r_1 - r_2)^2}{\ell} + 2\ell - \frac{(r_1 - r_2)^2}{\ell}$$
$$= \pi (r_1 + r_2) + 2\ell + \frac{(r_1 - r_2)^2}{\ell}, \text{ approximately.} \tag{4.25}$$

4.5 LENGTH OF BELT: CROSSED DRIVE

Referring to Fig. (4.2.ii), if $\angle O_1O_2E$ is α radians,

$$\sin\alpha = \frac{\mathrm{O_1E}}{\mathrm{O_1O_2}} = \frac{r_1 - r_2}{\ell}$$
$$\angle AO_1B = \angle CO_2D = \frac{\pi}{2} + \alpha; \tag{4.26}$$
$$\text{length } BC = FG = O_2E = \sqrt{\ell^2 - (r_1 + r_2)^2}.$$

The length of the belt,

$$L = 2\{\text{arc } AB + \text{arc } CD + \text{length } BC\}$$
$$= 2\left\{\left(\frac{\pi}{2} + \alpha\right) r_1 + \left(\frac{\pi}{2} + \alpha\right) r_2 + \sqrt{\ell^2 - (r_1 - r_2)^2}\right\}$$
$$= \pi (r_1 + r_2) + 2\alpha (r_1 + r_2) + 2\ell \left\{1 - \frac{1}{2}\left(\frac{r_1 + r_2}{\ell}\right)^2\right\} \tag{4.27}$$

If $(r_1 - r_2/\ell)$ is small and it is permissible to put $\alpha = \sin\alpha = r_1 + r_2/\ell$, the expression approximates to

$$L = \pi (r_1 + r_2) + \frac{2(r_1 + r_2)^2}{\ell} + 2\ell - \frac{(r_1 + r_2)^2}{\ell}$$
$$= \pi (r_1 + r_2) + 2\ell + \frac{(r_1 + r_2)^2}{\ell}, \tag{4.28}$$

It will be noticed that the expression for the length of belt L for a crossed belt drive is a function of $(r_1 + r_2)$ and ℓ. So long as these are constant, L is constant. For instance, for stepped pulleys on the counter-shaft the machine-shaft, the same length of belt will do for a crossed belt drive provided the sum of the diameters of the connected pulleys is constant.

D.E. 4.2 EXAMPLE CONE DIAMETER AND A BELT LENGTH

A shaft running at 130 r.p.m. drives a spindle, 240 cm apart by a crossed belt drive. The spindle has to run at 80, 120 and 160 r.p.m. The minimum diameter in the speed cone of the shaft is 20 cm. Determine the remaining diameters of the two speed cones and calculate the length of belt required.

Let d_1, d_3 and d_5 be the diameters of the speed cone on the shaft and let d_2, d_4 and d_6 the corresponding diameters of the speed cone on the shaft.

Now,

$$\frac{d_2}{d_1} = \frac{180}{80}$$

$$\therefore \quad d_2 = \frac{180}{80} \times 20 = 45\,\text{cm}$$

$$\therefore d_1 + d_2 = 20 + 45 = 65 = d_3 + d_4 = d_5 + d_6$$

$$\frac{d_4}{d_3} = \frac{180}{120}$$

$$\therefore \quad 2d_4 = 3d_3, \text{ and since } d_3 + d_4 = 65\,\text{cm}$$

$$d_3 = 26\,cm \text{ and } d_4 = 39\,\text{cm}$$

Similarly,

$$\frac{d_6}{d_5} = \frac{180}{160}$$

$$\therefore \quad 8d_6 = 9d_5 \text{ and since } d_5 + d_6 = 65\,\text{cm}$$

$$d_5 = 30.6 \text{ and } d_6 = 34.4\,\text{cm}.$$

Length of belt will be given by,

$$L_B = \pi\,(r_1 + r_2) + 2\ell + \frac{(r_1 + r_2)^2}{\ell}, \text{ considering } r_1 \text{ and } r_2 \text{ are } 3\frac{65}{2}\pi \text{ and } r_2 = 480$$

$$= \frac{65}{2}\pi + 480 + \frac{1056}{240}$$

$$= 586.4\,cm$$

4.6 TRANSMISSION OF POWER

When a belt drives a pulley, the inequality of tensions on the tight and slack sides exerts a torque on the pulley and work is done on it. This work, expressed as a rate, is the H. P. transmitted.

Consider a pulley of radius r being driven by a belt whose linear speed is ψ. Let T_1 be the tension on the tight side and T_2 the tension on the slack side. Let the angle of contact between the belt and the pulley be θ radians, as shown by $\angle AOB$ in Figure (4.3).

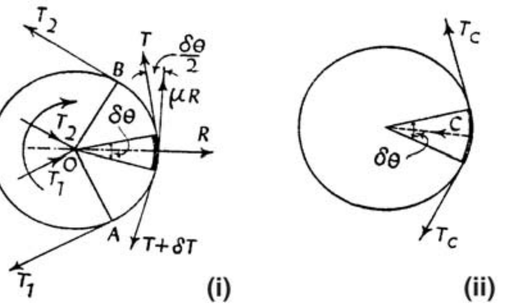

Figure 4.3. Power transmission belt taut and slackering and centrifuged force.

In Fig. (4.3), T_2 is the slack tension at B which, across the surface of contact along the arc BA, increases to T_1 the tension on the tight side at A, owing to friction. Consider an element δs of the belt subtending an angle $\delta\theta$ at the centre. The forces acting on it are:

(i) the pull $(T + \delta T)$ at one end
(ii) the pull T at the other
(iii) the normal reaction R offered by the pulley surface and
(iv) the maximum frictional resistance μR acting tangentially if the element is on the point of slipping.

The element is moving at a *uniform* speed of ψ. The forces acting on the element must, therefore, *balance* among themselves, because by Newton's First Law of motion, if a body continues to be in a state of rest or *uniform* motion, no force acting on it.

Resolving normally,

$$(T + \delta T)\sin\frac{\delta\theta}{2} + T\sin\frac{\delta\theta}{2} = R \tag{4.29}$$

Since $\delta\theta$ is small, $\sin\dfrac{\delta\theta}{2} = \dfrac{\delta\theta}{2}$

$$\therefore \quad (T + \delta T)\frac{\delta\theta}{2} + T\frac{\delta\theta}{2} = R$$

$$\therefore \quad T\delta\theta = R \tag{4.30}$$

neglecting small quantities of a higher order.

Resolving tangentially,

$$(T + \delta T)\cos\frac{\delta\theta}{2} + T\cos\frac{\delta\theta}{2} = T\cos\frac{\delta\theta}{2} + \mu R.$$

Since $\delta\theta$ is small, $\cos\dfrac{\delta\theta}{2} = 1$ and substituting for R from Eq. (4.30),

$$\delta T = \mu R = \mu T\delta\theta$$

$$\therefore \quad \frac{\delta T}{T} = \mu \cdot \delta\theta \tag{4.31}$$

Integrating the expressions from B to A,

$$\int_{T_2}^{T_1} \frac{dT}{T} = \int_0^{\theta} \mu \cdot d\theta$$

$$\therefore \quad \left[\log_e T\right]_{T_2}^{T_1} = \mu\theta$$

or $\quad \log T_1/T_2 = \mu\theta$, θ being in radians.

Expressing this Naperian logarithm in terms of the corresponding logarithm to the base 10, the values of $\mu\theta$ are evaluated,

$$2.3\log_{10}\frac{T_1}{T_2} = \mu\theta \tag{4.32}$$

This expression gives the relation between the *tight* and *slack tensions in terms of the coefficient of friction and the angle of lap or contact.* It is noteworthy that the ratio depends only upon the angle of lap and is independent of the size of the pulley.

These unequal tensions exert a torque on the pulley. To the pull T_1 at A, there will be an equal and opposite reaction T_1 at the bearing O. These form a couple of moment $T_1 \cdot r \downarrow$. To the pull T_2 at B, there will be an equal and opposite reaction T_2 at the bearing. These form a couple $T_2 \cdot r$. The next rotating couple is, thus, $(T_1 - T_2)r \uparrow$. The total reaction T_1 and T_2 acting at the bearings.

The rotating couple on the pulley is $(T_1 - T_2)r$. If the pulley rotates at an angular speed ω rad/sec, the work done per second on the pulley is couple $\times$ angle turned through, i. c., $(T_1 - T_2)r\omega = (T_1 - T_2)\psi$, since $\psi = r\omega$.

The result could have been obtained simply by stating that the work done by the belt on the pulley, per second, is $T_1 \cdot \psi$ on the tight side where ψ is the linear speed of the belt. From this, an amount equal to $T_2 \cdot \psi$ is absorbed in overcoming the tension T_2 on the slack side. The net work transmitted to the pulley is therefore, $(T_1 - T_2)\psi$ per second, and the H. P. transmitted is therefore $(T_1 - T_2)\upsilon/550$.

$$\text{In m.k.s. units H. P.} = \frac{(\mathrm{T}_1 - T_2)\upsilon}{75} \tag{4.33}$$

In S.I. units H. P. = 0.745702 kW. Equation (4.33) can easily be written in S.I. units.

Putting $T_2 = k \cdot T_1$ where k is a fraction depending upon the angle of lap and the coefficient friction, the expression for H. P. becomes:

$$\text{H. P.} = \frac{T_1(1-k)\upsilon}{550}.$$

$$\text{In m.k.s. units, H. P.} = \frac{T_1(1-k)\upsilon}{75} \tag{4.34}$$

In S.I. units, H. P. unit = 0.745701 kW.

The maximum pull T can be called upon to exert will be:

$$T = \sigma b_1 t \tag{4.35}$$

Where T_1 reaching T, $\sigma = \mathrm{N/mm^2}$(stress), b_1 = belt width (mm) and t = thickness of the belt (mm).

Equation (4.33) will still be applied.

The maximum Tensile Strength in the belt is 19.61 to 34.32 MN/m^2 (200 kg/cm^2 to 350 kg/cm^2).

D.E. 4.3 EXAMPLE ON HORSE POWER/KILOWATT [REF: FIG.4.3i]

An open belt 100 mm (4″) wide connects two pulleys mounted on parallel shaft 2.44 m (8 ft.) apart. The diameter of the larger pulley is 4.50 mm (18″) and that of a smaller 300 mm (12″). The bigger pulley is rotating at 120 r.p.m. If the permissible stress in the belt is limited to 14 kN/metre width (80 lb/inch width).

Find the maximum H.P. or kW that can be transmitted at this speed if $\mu = 0.3$.

Referring to Fig. (4.3i), the contact angle $CO_2F = (\pi - 2\alpha)$ where

$$\sin\alpha = \frac{r_1 - r_2}{\ell} = \frac{(0.225 - 0.150)}{2.44} = 0.0307$$

Hence $\alpha = 1°48', 2\alpha = 3°36' = 0.0628$ radian.

The angle of lap $\theta = \pi - 2\alpha = 3.0788$ radian

$$2 \times 3 \log \frac{T_1}{T_2} = \mu\theta$$

$$\text{or } \log \frac{T_1}{T_2} = \frac{\mu\theta}{2 \times 3} = \frac{0.92364}{2 \times 3} = 0.4016$$

$$\frac{T_1}{T_2} \geq 2.521$$

$$T_2 = \frac{1}{2.521} \cdot T_1$$

T_1 is allowed to go up to $T = \sigma_1 b = 80 \times 4 = 320$ lb-wt – imperial units

or $\qquad = 14 \times 0.1 = 1.4$ kN – S.I. units

Belt linear speed $= \psi = r\omega = \frac{3}{4}\left(\frac{2\pi \times 120}{60}\right) = 3\pi$ ft/sec

The maximum H.P. that can be transmitted at this speed is given below:

$$\text{H.P.} = \frac{T\,(1-k)\,\upsilon}{550} = 320 \times \left(1 - \frac{1}{2.521}\right)\frac{3\pi}{550} = 3.31$$

To convert to kW multiply H.P. by 0.745712 used in S.I. units

$$= 3.31 \times 0.745712 = 2.468\,\text{kW}$$

Generally for θ the smaller angle $\angle GO_1B$ is taken rather than $\angle CO_2F$.

4.7 CENTRIFUGAL TENSION

In studying the forces acting on an element δs of the belt as above, we failed to take note of a factor, which, while it may be ignored at low belt-speeds, is not negligible at moderately high or high belt speeds. We stated that the element is moving at a *uniform* speed of ψ. That is correct but we should have noted that it is not moving at a uniform speed along a *straight* path but on a *circular path.*

We have seen that when a particle of mass m describes a circular path of radius r at a *uniform* linear speed, there is a central acceleration of υ^2/r on it and there must be a central force $m\upsilon^2/gr$ acting on it. If w is the mass per meter length of the belt δm of the element δs will be $w \cdot \delta$s or $w \cdot r\delta\theta$. There is a central force C on the element given by

$$C = \frac{\delta m \cdot \upsilon^2}{gr} = \frac{w \cdot r\delta\theta\upsilon^2}{gr} = \frac{w \cdot \upsilon^2}{g} \cdot \delta\theta\,\text{kN}$$

Referring to Fig. (4.3ii) this central force C can only be supplied by equal pulls T_C at either end of the element.

Resolving normally,

$$C = 2T_C \cos\left(\frac{\pi}{2} - \frac{\delta\theta}{2}\right) \tag{4.36}$$

$$= 2T_C \sin\frac{\delta\theta}{2} = 2T_C \times \frac{\delta\theta}{2}, \text{ since } \delta\theta \text{ is small}$$

$$= T_C \cdot \delta\theta$$

Equating,

$$T_C \cdot \delta\theta = \frac{w \cdot \upsilon^2}{g} \cdot \delta\theta$$

or $$T_C = \frac{w \cdot \upsilon^2}{g}\ \text{kN} \tag{4.37}$$

The forces will be complete if one adds pull T_C on either side of the element. Referring as Fig. (4.4ii)*.

$$\text{Total pull at } A = (T_1 + T_C) \tag{4.38}$$
$$\text{at } B = (T_1 + T_C)$$

The value of H.P. is not affected.

The maximum permissible pull T

on the belt $*\sigma bt$ kN

on tight side $T_1 + T_C \longrightarrow t_o T$ (4.39)

$T_1 \times$ effective pull $= (T - T_C)$ (4.39a)

D.E. 4.4 EXAMPLE ON H.P. CALCULATIONS

(a) A belt 160 mm wide by 8 mm thick is transmitting power at a speed of 900 metres per minute. The nett driving tension is twice the tension on the slack side. If the safe permissible pull on the belt-section is 1.96 N/mm^2, calculate the maximum H.P. that can be transmitted at this speed. The density of leather is 1.1 gm/cm^3.

(b) Calculate the absolutely maximum H.P. and the speed at which it is transmitted for the belt.

(a) $w = 1.1 \times 16 \times 0.8 \times 100 = 1408\ \text{gm} = 1.408\ \text{kg} = 0.0128\ \text{kN}$

$$\psi = \frac{900}{60} = 15\ m/\text{sec}$$

$$T_C = \frac{w \cdot \upsilon^2}{g} = \frac{1.408 \times 225}{9.807} = 23.30\ kg \cdot wt = 0.2936\ \text{kN}$$

$$T_{\max} = \sigma bt = 1.96 \times 160 \times 8 = 2508.8\ N \approx 2.509\ \text{kN} = 256\ kg \cdot wt$$

$$T_1 = T_{\max} - T_C = 2.509 - 0.2936 = 2.2154\ \text{kN}$$

$$\text{H.P.}_{(\max)} = \frac{T_1(1-k)\upsilon}{75}$$

Here H.P. is in $kg{\cdot}m/\text{sec} = 75$

$\text{H.P.}_{(\max)} = 2.2154\left(1 - \dfrac{1}{2}\right) \times \dfrac{15\ \text{m/sec}}{75\ kg{\cdot}\text{m/sec}} \times \hat{K}$, where $\hat{K} =$ conversion unit in kW $= 1.34102$ (H.P.) based on S.I. units.

So,

$$\text{H.P.}_{(\max)} = 0.22154 \times 1.43102$$
$$= 0.2971\ \text{kW}$$

(b) $T_{(max)} = 2.509\,kN \approx 256\,kg \cdot wt$

One-third will go to provide T_C

$$T_1 = \left(1 - \frac{1}{3}\right) 256 = 171\,kg - wt$$

$$T_C = \frac{w \cdot \upsilon^2}{g} = 85\,kg - wt = \frac{1.408\,kg \times \upsilon^2}{9.81}$$

$$\upsilon^2 = 592.3$$

$$\upsilon = 24.34\,m/\text{sec}$$

Absolute H.P.$_{(\max)}$,

$$\begin{aligned}\frac{T_1\,(1-k)\,\upsilon}{75} \times \hat{K} &= 171\left(1 - \frac{1}{2}\right)\frac{24.34 m/\text{ sec}}{75 kg \cdot m/\text{ sec}} \times \hat{K} \\ &= 27.74\hat{K} \\ &= 27.74 \times 1.34102 \\ &= 37.2\,\text{kW}\end{aligned}$$

4.8 ROPE DRIVE

When considerable power is to be transmitted as in a factory, a better friction-grip than that of a flat belt on a pulley-surface is provided by using ropes riding on grooved pulleys. The rope rests in tension against the two sides of the groove and wedge-grip effects the driving of the rope and pulley.

In Figure (4.4), let α be the semi-angle of the groove. Let $R_1 - R_1$ be the normal reactions offered by the sides of the wedge to the rope.

Then, the frictional resistance to motion will be $F = \mu R_1 + \mu R_1 = 2\mu R_1$, acting tangentially at the lines of contact through A and B. If R is the resultant of the reactions $R_1 - R_1$, we have:

$$\begin{aligned} R &= R_1 \sin\alpha + R_1 \sin\alpha \\ &= 2R_1 \sin\alpha \end{aligned} \tag{4.40}$$

And,

$$F = 2R_1 \sin\alpha = \mu \times \frac{R}{\sin\alpha} = \mu R \operatorname{cosec}\alpha \tag{4.41}$$

If one considers an element δs of the rope for the belt-element, the forces on the rope element will be as in Figure (4.4) a pull $T + \delta T$ on one side, T on the other, a normal reaction R and a frictional resistance $F = \mu$ cosec$\alpha \cdot R$ acting tangentially. The only difference between the forces for the belt-element and the rope-element is that for the latter, the frictional resistance is $\mu \cos ec\alpha \cdot R$

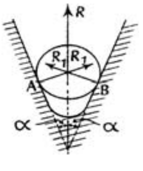

Figure 4.4. Rope riding on grooved pulleys.

as against $\mu \cdot B$ for the belt-element. The relation between T_1 and T_2 for the rope-element will work out as:

$$2 \times 3 \log_{10} \frac{T_1}{T_2} = \mu \text{cosec}\alpha \cdot \theta, \tag{4.42}$$

where θ is the angle of lap in radians and α is the semi-angle of the groove.

If centrifugal tension is to be taken into account,

$$T_C = \frac{w \cdot \upsilon^2}{g} kg - wt,$$

where w is the weight per meter length of the rope.

D.E. 4.5 EXAMPLE ON GROOVED PULLEY AND ROPE

A rope 38 mm (1½″) diameter drives a grooved pulley at a speed of 18.28 m/sec (60 ft/sec). The angle of lap of the rope on the pulley is 210°, the angle of groove for the pulley is 60°, coefficient of friction $\mu = 0.3$, weight per meter is 0.816 kg (0.6 lb/ft) of the permissible tension is of the rope is 1379 kN/m^2 (200 lb/m^2), calculate the maximum H.P. or kW that can be transmitted at this speed. Take acceleration g = 9.807 m/sec (32 ft/sec).

$$T_C = \frac{w \cdot \upsilon^2}{g} = \frac{0.6 \times 60 \times 60}{32} = 67.5\, lb \cdot wt = 9.217\, kg - wt$$

$$T = \sigma \cdot \frac{\pi d^2}{4} = 139 \left(\frac{\pi}{4}\right) (0.038)^2 = 1.565\,\text{kN} \; or \;\; 353.4\, lb \cdot wt$$

Max. Tension (effective) $= T - T_C = 353.4 - 67.5 = 285.9\,\text{lb} \cdot wt$
$= 6.9211\,\text{kg} \cdot wt$

Now,

$$2.3 \log_{10} \frac{T_1}{T_2} = \mu \text{ cosec}30^\circ = 0.3 \times 2 \times \frac{210}{180}\pi = 2.2$$

$$\frac{T_1}{T_2} = 9.046$$

$$\text{H.P.} = \frac{T_1(1-k)\upsilon}{550} = \frac{285.9 \times 8.046 \times 60}{9.046 \times 550} = 27.74$$

In kW,
$27.74 \times 0.745712 = 20.7\,\text{kW}$.

Table 4.1 Rope group 6 × 19.

Nominal diameter (mm)	Minimum breaking load (kN)	Weight (kg/m) Natural fibre	Weight (kg/m) Synthetic fibre
6	17.8	0.13	0.127
8	31.7	0.231	0.225
10	49.5	0.361	0.352
11	59.9	0.437	0.426
13	83.7	0.610	0.592
16	127	0.924	0.901
19	179	1.300	1.270
22	240	1.750	1.700

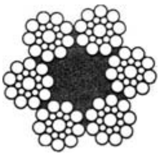

Round-strand equal lay 6 × 19 (9/9/1)

Each rope construction group has two subgroups: 9/9/1 and 12/6 + 6F/1
i.e. 9 outer, 6 inner, 1 central
or 12 outer, 6 inner, 1 outer with 6 smaller wires between the outer and the inner.

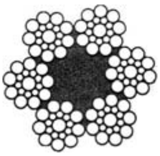

Round-strand equal lay 6 × 19 (12/6 + 6F/1)

Table 4.2. Rope group 8 × 19.

Nominal diameter (mm)	Minimum breaking load (kN)	Weight (kg/m) Natural fibre	Weight (kg/m) Synthetic fibre
8	28.1	0.222	0.217
10	43.9	0.347	0.339
11	53.2	0.420	0.410
13	74.3	0.586	0.573
16	113	0.888	0.868
19	159	1.250	1.220
22	213	1.680	1.640

Plate 4.1. Elevator rope data.

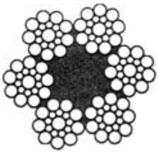

Round-strand equal lay 8×19 (9/9/1)

Table 4.3. Technical data of 6×26(10/5 + 5/5/1) dyform rope.

Nominal diameter (mm)	Weight (kg/100 m)	Minimum breaking load (kN)
8	25.6	33.2
9.5	36.1	52.0
11	48.4	70.6
13	67.6	95.1
15.3	81.8	118
16	102	147

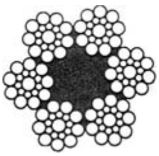

Dyform rope 6 × 26 (10/5 + 5/5/1)

Table 4.4. Technical data of 8×19 (9/9/1) dyform rope.

Nominal diameter (mm)	Weight (kg/100 m)	Minimum breaking load (kN)
8	23.4	31.4
9	29.6	40.8
10	36.5	53.0
11	44.2	61.7
12	52.6	74.6
13	61.7	91.2
15.5	87.7	128
16	93.4	135

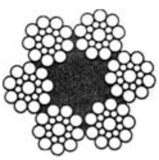

Dyform rope 8 × 19 (9/9/1)

Plate 4.1. (*Continued*).

5

Design analysis of lift elements and components

5.1 INTRODUCTION

Cars and counterweights are suspended by steel wire ropes, roller chains or chains with parallel links. Only rope suspension is considered in this section. Elevator ropes are attached to the crosshead of the car frame or pass around multiple pulleys mounted on the crosshead, if a roping system other than 1:1 is employed. Suspension of each rope must always be independent. The minimum number is two for traction elevators and for positive drive ones. An automatic device for equalizing the tension of suspension ropes should be provided at least at one of their ends. This device is usually represented by an equalizing gear of individual compression spring type and with rubber buffers.

The size of the rope is identified by its nominal diameter and shall be within plus 4% and minus nil of the nominal value with ropes up to diameter of 10 mm and within $\pm 3\%$ and minus nil of the nominal for diameter over 10 mm, measured under a tension equal approximately to 10% of the breaking load. The actual diameter measured on a straight portion of the rope under no tension should be equal to the nominal diameter with a tolerance of $+6\%$ and $+2\%$ for ropes of diameters up to 10 mm and $+5\%$ and $+2\%$ for ropes of diameters over 10 mm.

5.2 ELEVATOR ROPE DATA

In BS 302: Part 4: 1998 and ISO 4.344 only two main groups of elevator suspension ropes are specified which are 6×19 and 8×19. It means 6 or 8 strands per rope and 19 wires per strand. Tables (4.1) and (4.2) show the technical data for 6×19 and 8×19 construction groups respectively in Plate 4.1. There are other kinds developed by BRIDON ROPES LTD and they are called DYFORM ELEVATOR ROPES. Typical versions are given on Plate 4.1 with technical data and parameters.

5.3 FACTOR OF SAFETY FOR ELEVATOR ROPES

The factor of safety is the ratio between the minimum breaking load of the rope and the maximum static force in this rope and is calculated by the following formula:

$$f = \frac{n \times N}{F} \tag{5.1}$$

where N is the minimum breaking load of one rope (N) (the actual breaking strength, if given by the manufacturer, may be used for calculation); n is the number of suspension ropes; F is the maximum tensile force in the elevator ropes (at the most unfavourable position in the hoist way). For the calculation of this force the car is usually supposed to be stationary at the lowest level with the rated load; the effect of the mass of the car, the mass of the elevator ropes, the mass of the appropriate portion of the traveling cables and any compensating device suspended from the car must be taken into consideration, as well as the effect of the roping factor i.

In compliance with BS 5655: Part 1: 1979 and EN 81: Part 1 the safety factor of the suspension ropes must be at least

(a) 12 in the case of traction drive with three ropes or more
(b) 16 in the case of traction drive with two ropes
(c) 12 in the case of drum drive.

In the USA the minimum factor of safety of the suspension ropes is based on the actual rope speed corresponding to the rated speed of the car and is slightly greater for passenger elevators than for freight ones of the same speed. In general the American values are lower in comparison with the British value of 12 as they reach the maximum of 11.9 (passenger) or 10.55 (freight) respectively, for speeds in the range of 7 up to 10 m/s.

D.E. 5.1 MINIMUM FACTORS OF SAFETY FOR SUSPENSION WIRE ROPES

Determine minimum factor of safety for suspension wire ropes for both passenger and freight elevators using the rope speeds (m/sec):

Rope speed, 0.25, 1.0, 1.50, 2.0, 3.0, 3.50, 3.75, 4.0, 4.50, 4.75, 5.0, 5.5, 6.0, 6.5, 7.0 and 10.0.

Rope speed m/s	Passenger elevator	Freight elevator
0.25	7.60	6.65
1.00	8.60	7.65
1.50	9.20	8.20
2.00	9.75	8.70
3.00	10.70	9.50
3.50	11.00	9.80
3.75	11.15	9.90
4.00	11.25	10.00
4.50	11.45	10.15
4.75	11.50	10.20
5.00	11.55	10.30
5.50	11.70	10.40
6.00	11.80	10.50
6.50	11.85	10.55
7.00	11.90	10.55
10.00	11.90	10.55

5.4 ROPE TERMINATION

The most popular methods of terminating the suspension ropes are listed below:

(a) Self-tightening wedge type socket
(b) Tapered babbitted socket
(c) Resin socketing
(d) Rope grips
(e) Ferrule secured eye.

5.5 SPECIFIC PRESSURE IN ROPES

BS EN 81 – 1: 1998 on the safety rules adopted in The European Standard calculates the specific pressure, p, of the suspension ropes and it shall not exceed:

$$p_{\max} = \frac{12.5 + 4v}{1 + v}\ (\mathrm{N/mm^2}) \tag{5.2}$$

where, v = the speed of the ropes corresponding to the rated speed.

The specific pressure may be calculated from the following formula:

$$p = \frac{2.55 \times T}{n \times d \times D}, \text{ for semicircular grooves} \tag{5.3}$$

$$p = \frac{8 \times T \cos(0.5\beta)}{n \times d \times D \sin(\pi - \beta - \sin\beta)}, \text{ for undercut grooves} \tag{5.4}$$

$$p = \frac{4.71 \times T}{n \times d \times D \sin(0.5\gamma)}, \text{ for vee grooves} \tag{5.5}$$

where,

T = the static force in the ropes with a stationary car, loaded by its rated load, at the lowest landing (N)
n = number of ropes
D = the traction sheave diameter (mm)
d = the suspension rope diameter (mm)
β = angle undercut groove (rad)
γ = angle vee groove (rad).

D.E. 5.2 EXAMPLE ON SPECIFIC PRESSURE

Weight of car (W):	750 kg	Rated load (Q):	630 kg
Rated speed (ψ):	1.5 m/s	Number of ropes (n):	5
Rope diameter (d):	11 mm	Roping ratio:	1:1
Sheave diameter (D):	560 mm		

Determine the specific pressure for:

(a) 90° undercut
(b) 35° vee grooves.

The maximum permissible value of specific pressure is:

$$p_{\max} = \frac{12.5 + 4 \times 1.5}{1 + 1.5} = 7.4\ N/mm^2$$

(a) $$p = \frac{8 \times (750 + 630^\circ) \times 9.81 \cos(45^\circ)}{5 \times 11 \times 560(\pi - 1.57 - \sin(90^\circ))} = 4.36\ N/mm^2 \qquad \text{(undercut)}$$

(b) $$p = \frac{4.71 \times (750 + 630^\circ) \times 9.81}{5 \times 11 \times 560 \times \sin(17.5^\circ)} = 6.95\ N/mm^2 \qquad \text{(vee)}$$

D.E. 5.3 EXAMPLE ON A CORRECT SELECTION OF SUSPENSION ROPES

It is required to make a correct selection of suspension ropes for a passenger lift, using the following parameters without compensating cables:

Rated load (Q)	=	630 kg
Mass of the car (M_{cr})	=	750 kg; $n = 4$
Mass of the counterweight (M_{cw})	=	1020 kg
Height of the travel (H)	=	33.75 m
Rated speed (υ)	=	1.5 m/sec
Roping factor (i)	=	1
Safety factor (f)	=	12

$nN = Ff = (Q + M)g_n f = (630 + 750) \times 9.81 \times 12 = 162453.5$ *Newtons*

6 × 19 Construction group

d = nominal dia.	= 10 mm	$N = 198$ kN
» = »	= 11 mm	$N = 239.6$ kN

N = *breaking load*

8 × 19 Construction group

d = nominal dia.	= 10 mm	$N = 175$ kN
» = »	= 11 mm	$N = 212.8$ kN

Both are satisfactory.

Specific pressures can be reduced on sheave grooves with 11 mm nominal diameter.

D.E. 5.4 EXAMPLE ON SAFETY FACTORS

If the roping factor $i = 1$ and factor of safety, $f = 12$ for traction drive with more than 2 ropes and the maximum static load $F = 1.36$ kN for suspension ropes, determine the minimum breaking load when n, the number of ropes is 4 and the rope acceleration $g_n = 9.81$ m/s^2.

$$nN = Ff = 1360 \times 12 \times 9.81 = 160\,\text{kN}$$

The minimum breaking load for a rope $= \dfrac{160}{4} = 40$ kN.

5.6 ROPE ELONGATION

As the rated load moves in and out of the car the rope length will change elastically and (unless re-levelling is employed) can cause a tripping hazard. Elastic elongation can be calculated from:

$$e = \frac{F \times l}{E \times A} \text{ (mm)} \tag{5.6}$$

where:
- e = is the elongation (mm)
- F = is the applied load (kN)
- l = is the rope length (mm) or (m)
- E = is Young's Modulus (kN/mm^2)
- A = is the cross-sectional area of the rope (mm^2).

The applied load will be greatest, when a fully loaded car is stationary at the lowest floor. The load will be the sum of the weight of the car, its rated load and the weight of ropes.

Other reasons for rope elongation are: settlement of the components, temperature change, rope rotation, wear and plastic elongation due to overload. The elongation due to settlement is called *permanent constructional extension.* This may be as much as 0.25% for lightly loaded ropes; 0.5% for normally loaded ropes and 1.0% for heavily loaded ropes.

D.E. 5.5 EXAMPLE ON ROPE ELONGATION

Assuming the diameter of ropes is 13 mm. The six number of ropes carry the total of 2000 kg have total suspended length of 19.5 m. Using $E = 57.24$ kN/mm^2 for the value of the Young's Modulus of the rope with a fibre core.

$$A = \text{area of ropes} = \pi\frac{(13)^2}{4} \times 6\,\text{No.} = 796.7\,\text{mm}^2$$

$$e = \frac{Fl}{EA} = \frac{\frac{2000 \times 9.0856}{1000} \times 19.5}{57.24\,kN/\text{mm}^2 \times 796.7\,\text{mm}^2} = 0.00777\,\text{m} = 7.77\,\text{mm}$$

5.7 TYPES OF DRIVES AND TRACTION

5.7.1 *Introduction*

With traction drive the driving sheave acts as the means for transmitting power to the elevator (lifts) ropes. As a result the tractive force is initiated by the friction existing between the ropes and sheave grooves. Since different roping systems exist great attention should be given to the selection of the system so as to achieve long life of the ropes with corresponding system high efficiency and reasonable power consumption.

The machine is usually situated above the hoist way once this overhand position of the machine facilities the application of simple roping systems with low loads. For reasons of higher loads and costs, the basement location of the machine should be avoided. The types of drives are given in Plate (5.1).

(a) Vee-groove, having an angle of 32–40°.
The traction increases with decreasing angle of the groove, but so does the specific pressure and resultant wear of both grooves and suspension ropes.
(b) With the round groove or semi-circular groove of traction sheave, the traction is much lower so that the double wrap drive is often used with high speed elevators. In this the contact area between the rope and the groove will have lower specific pressure and hence longer rope life.
(c) The intermediate between (a) and (b) is the undercut groove of traction sheave. The details are given on Plate (5.1).

5.7.2 *Traction of forces on sheave*

To ensure that an elevator has sufficient traction, the following traction Euler's modified formula should be applied:

$$\frac{T_1}{T_2} \times C_1 \times C_2 \leq e^{fa} \tag{5.7}$$

$$\frac{T_1}{T_2} \leq e^{fa} \tag{5.7a}$$

where:

T_1/T_2 = is the traction ratio between the greater and the smaller static force in the portions of the suspension rope on either side of the traction sheave for the case of:
(a) the car stationary at the lowest landing with a load equal to 125% of the rated load and
(b) and unloaded car stationary at the highest landing.

C_1 = is the coefficient of dynamics.

$$C_1 = \frac{g_n + a}{g_n - a}$$

(a) Vee-groove of traction sheave

$f = \dfrac{\mu}{\sin(0.5\gamma)}$ for vee-grooves

The maximum value of specific pressure at any point along the wrap of rope on the traction sheave is then given by the following formula:

$$p = \frac{3\pi \times T}{2D \times d \times \sin\frac{\gamma}{2}} \ (N/mm^2)$$

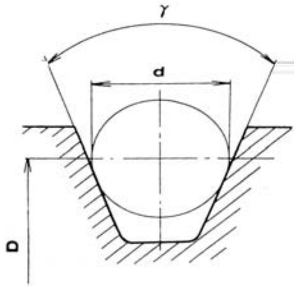

(a) vee-groove of traction drive

where,

- T is the tensile force at the point where specific pressure is calculated [N],
- D is the pitch diameter of the sheave [mm],
- d is the nominal rope diameter [mm],
- γ is the angle of vee-groove [°],
- β angle of undercut grooves [rad],
- μ coefficient of friction [0.09 for steel ropes and cast iron pulleys].

(b) U-groove semi-circular or round

$$f = \frac{4\mu}{\pi} \text{ for semi-circular grooves}$$

$$p = \frac{8T \times \cos\phi}{D \times d \times (\delta + \sin\delta)} \ (N/mm^2) \text{ which gives the value of general validity.}$$

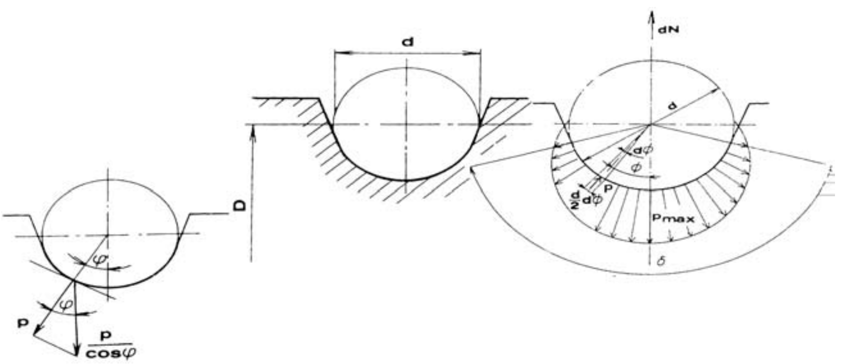

(b) U-groove [semi-circular] of traction drive

Plate 5.1. Drives and traction.

(c) Undercut groove of traction drive

$\alpha =$ angle of wrap[rad]

$f =$ coefficient of friction between ropes and groove

$= \dfrac{4\mu[1 - \sin(0.5\beta)]}{\pi - \beta - \sin\beta}$ for undercut grooves

The maximum pressure will occur at the edge of the undercut

$$p = \frac{8T \times \cos\dfrac{\beta}{2}}{D \times d \times (\delta - \beta + \sin\delta - \sin\beta)} \ (N/mm^2)$$

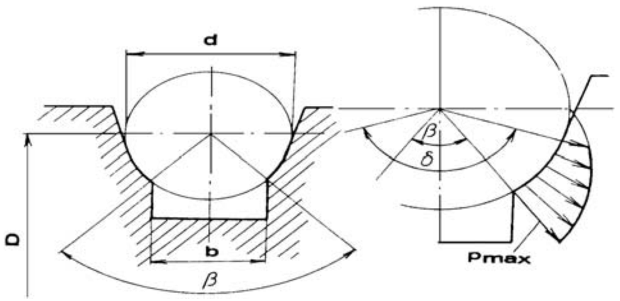

(c) Undercut groove of traction drive

Plate 5.1. (*Continued*).

where:

$g_n =$ is the standard gravity of free fall (9.81 m/s^2)

a = is the value of deceleration of the car (m/s^2)

where

$$T_1 = \left\{\frac{Q + M}{i} + m_L\right\} \times g_n \quad Newton \tag{5.8}$$

$$T_2 = \frac{M_{cw}}{i} g_n \quad Newton \tag{5.9}$$

Hence,

$$\frac{T_1}{T_2} \le e^{fa_1} \quad \text{and} \quad \frac{T_3}{T_2} \le e^{fa_2} \tag{5.10}$$

where T_3 is the tensile force after the first wrap of the sheave with angle of wrap a_1 and so on.

For double wrap

$$\frac{T_1}{T_2} \le e^{f(a_1 + a_2)} \tag{5.11}$$

Values of C_1 and C_2 are given below:

Rated speeds (m/s)	C_1
$0 < v \leq 0.63$	1.10
$0.63 < v \leq 1.00$	1.15
$1.00 < v \leq 1.60$	1.20
$1.60 < v \leq 2.50$	1.25
$v \leq 2.50$	1.25 (at least)

$C_2 =$ is the coefficient of groove profile and is taken as:

(a) 1.0 for semicircular or undercut grooves
(b) 1.2 for vee grooves.

D.E. 5.6 EXAMPLE ON TRACTION AND PRESSURE

Rated load	$= 630\,\text{kg}$
Weight of the car	$= 737\,\text{kg}$
Weight of counterweight	$= 1020\,\text{kg}$
Rated speed	$= 1.6\,\text{m/s}$
Deceleration (max)	$= 1.0\,\text{m/s}^2$
Sheave profile: undercut	$= 105°$
Angle of wrap	$= 165°$

Then,

$$T_1 = 1.25 \times 630 + 737 = 1524$$
$$T_2 = 1020$$
$$C_1 = 9.81 + \frac{1.0}{9.81} - 1.0 = 1.23 \text{ (greater than 1.20, so is adopted)}$$
$$C_2 = 1.0 \text{ (undercut groove)}$$
$$f = \frac{4 \times 0.09[1 - \sin 52.5°]}{\pi - 1.833 - \sin 105°} = 0.215.$$

The traction formula is used as (left hand side):

$$\frac{1524}{1020} \times 1.23 \times 1.0 = 1.84$$

The traction formula is used (right hand side):

$$e^{0.215 \times 2.88} = 1.86$$

As $1.84 < 1.86 \quad \therefore$ o.k.

D.E. 5.7 EXAMPLE: A COMPARATIVE STUDY OF V_s ROUND AND UNDERCUT GROOVES FOR SPECIFIC PRESSURE AND COEFFICIENT OF FRICTION IN THE SHEAVE GROOVE

Data:

$$\gamma = 35° - vee$$

$$\left.\begin{array}{l}\text{(a) } \delta = 167° \\ \text{(b) } \delta = 180°\end{array}\right\} \text{Round}$$

$$\left.\begin{array}{l}\text{(a) } \beta = 90^\circ, \delta = 180^\circ \\ \text{(b) } \beta = 105^\circ, \delta = 180^\circ\end{array}\right\}\text{Undercut}$$

$D = 560$ mm, 610 mm; $\upsilon = 1.6$; $Q = 737$ kg; $M = 630$ kg; $n = 4$

$$p = max$$
$$p = \text{permissible pressure} \leq \frac{12.5 + 4\upsilon}{1 + \upsilon} = 7.270 \text{ N/mm}^2$$
$$T = \text{max. tensile force} = \frac{(M + Q)g_n}{n} = 3352.5 \text{ N}$$
$$p = \frac{3\pi(3352.5)}{2 \times 560 \times 11 \times \sin 17.5^\circ} = 5.29 = 8.529 \text{ N/mm}^2$$
$$D = 610 \text{ mm}; \; p_{(max)} = 7.8290 \text{ N/mm}^2$$

For a V-Group of grooves,

$$\textit{The coefficient of friction} = \frac{\mu}{\sin \frac{\gamma}{2}} = \frac{0.09}{\sin 17.5^\circ} = 0.299$$

For $D = 560$

$$\text{(a) } p = \frac{8 \times 3352.5}{560 \times 11 \times \left[\frac{167}{180} \times \pi \sin(167)\right]} = 1.38 \text{ N/mm}^2$$

$$\text{(b) } p = \frac{8 \times 3352.5}{560 \times 11 \times \pi} = 1.386 \text{ N/mm}^2$$

For sheave diameter 610, similarly $p = 1.273$ N/mm^2

Calculating for f:

$$\text{(a) } f = 4 \times 0.09 \times \frac{\sin 83.5^\circ}{\frac{167}{180}\pi + \sin 167^\circ} = 0.11400$$

$$\text{(b) } f = \frac{4 \times 0.9}{\pi} = 0.1145.$$

Calculations for 'p' for 560 mm and 610 mm sheave diameter:

$$\text{(a) } p = \frac{8 \times 3352.5 \cos 45^\circ}{560 \times 11 \times \left(\frac{\pi}{2} - 1\right)} = 5.394 \text{ N/mm}^2$$

$$\text{(b) } p = \frac{5 \times 3352.5 \cos 2.5^\circ}{560 \times 11 \times \left[\pi - \frac{105}{180} \times \pi - \sin 105^\circ\right]} = 7.726 \text{ N/mm}^2$$

Sheave diameter 610 mm:

(a) $p = 4.952$ N/mm^2
(b) $p = 7.090$ N/mm^2

(a) $f = 4 \times 0.09 \times \left[\dfrac{1 - \sin 45°}{\dfrac{\pi}{2} - 1} \right] = 0.1847$

(b) $f = 4 \times 0.09 \times \left[\dfrac{1 - \sin 45°}{\dfrac{105}{180}\pi - \sin 105°} \right] = 0.121.$

5.8 LIFTING AND ELEVATOR MACHINES

5.8.1 *Definitions*

The principle underlying all lifting machines is to overcome a greater force – called *load W* – by means of a comparatively smaller force – called the *effort P.*

The *mechanical advantage* accruing from the lifting machine is measured by the ratio of the *load* lifted or overcome and the *effort* needed to do it. Thus,

$$\text{mechanical advantage} = \frac{W}{P} \tag{5.12}$$

During lifting if x is the displacement of the load W and y is the corresponding displacement of the effort P, the ratio of displacement of load is known as the velocity ratio of the machine. Thus,

$$\text{velocity ratio } V = \frac{y}{x} \tag{5.13}$$

In terms of work and energy, the effort P does work on the machine and it is utilized in lifting the load W.

The work done by the effort $= P \cdot y$ units. The work got out of the machine in lifting the load $= W \cdot x$ units.

In an ideal frictionless machine, there will be no loss in overcoming friction and the work supplied by the effort will be fully utilized in lifting the load.

$$P \cdot y = W \cdot x$$

or

$$\frac{W}{P} = \frac{y}{x} = V \tag{5.14}$$

i.e. the mechanical advantage = the velocity ratio.

Thus, the greater the mechanical advantage, the greater is the velocity ratio and what one gains in mechanical advantage, one loses in speed.

Taking friction into account, a part of the work done by the effort will have to overcome the frictional resistances of the machine and so, the useful work got out of the machine will always be less than the work supplied by the effort.

$$\therefore \quad W \cdot x < P \cdot y$$

or

$$\frac{W}{P} < \frac{y}{x} < V \tag{5.15}$$

Thus, the mechanical advantage is always less the velocity ratio.

The ratio of the useful work got out of the machine to the work put in by the effort is known as the *efficiency* of the machine and is usually expressed as a percentage. Thus,

$$\text{efficiency } \eta = \frac{W \cdot x}{P \cdot y} = \frac{W}{P} \times \frac{x}{y} = \frac{W}{PV} \tag{5.16}$$

This expression can be thrown into a variety of useful forms.

$$\eta = \frac{W}{PV} = \frac{W/P}{V} = \frac{\textit{mechanical advantage}}{\textit{velocity ratio}}$$

For a *given* load W for which the *actual* effort is P, the *ideal* effort if there were no friction, should have been W/V.

Therefore,

$$\eta = \frac{W}{PV} = \frac{W/V}{P} = \frac{\textit{ideal effort}}{\textit{actual effort}} \quad \text{for a } \textit{given} \text{ load} \tag{5.17}$$

Similarly with a given effort P to lift an *actual* load W, the *ideal* load lifted, if there were no friction, should have been PV.

Therefore,

$$\eta = \frac{W}{PV} = \frac{\textit{actual load}}{\textit{ideal load}} \quad \text{for a } \textit{given} \text{ effort} \tag{5.18}$$

The measure of friction in the machine can be stated in two ways. If P is the *actual* effort for a *given* load W, the *ideal* effort should have been W/V.

Therefore,

$$\text{the effort lost in friction} = \left(P - \frac{W}{V}\right) \tag{5.19}$$

We may also say that for a *given* effort P to lift a load W, the *ideal* load lifted should have been PV.

Therefore,

$$\text{frictional load} = (PV - W) \tag{5.20}$$

In all lifting machines, we shall be able to obtain the velocity ratio from the geometrical configuration of the machine. It needs no experiment but can be calculated, given the details of the machine. On the other hand, the mechanical advantage of the machine will depend upon the condition of the machine, the lubrication or lack of it etc. The mechanical advantage has usually to be obtained experimentally by noting the effort P required for a given load W.

5.8.2 *Elevator machines*

5.8.2.1 *General elevator machines*

5.8.2.1.1 General

Gearless machines are usually used for rated speeds over 2.5 m/s, while for lower speeds geared machines must be applied. Spur gears were used from time to time in the past, but with the advancement of design and production techniques worm gearing has become the accepted standard for geared elevator machines. In recent years the foremost elevator manufacturers like OTIS elevator Co. and Mitsubishi Electric Corp. introduced geared elevator machines for rated speeds up to 5 m/s, employing a double reduction of helical gears of high efficiency. The machine is equipped with a three-phase a.c. motor and speed control is accomplished through a frequency converter. In any case, helical gears are expected to be used for speed in excess of 2.5 m/s, while for lower speeds worm gearing will remain the standard.

The worm gearing is given attention and the application of its speed reducer offers many advantages:

(a) It has a minimum number of moving parts and requires low maintenance.
(b) Sliding action of the worm gear has a quiet operation.
(c) It has a high shock load resistance.
(d) It is compact, having small dimensions for a given ratio and transmitted power.

The worm is usually cut from forgings of alloy steel which provide a tough core of high strength and are suitable for case-hardening to get a hard working surface. The material is mostly nickel or nickel chromium steel, but some companies prefer 0.4% or 0.55% carbon steel for light-duty gearing, normalized. The hardened worms are ground and polished to provide a perfect tooth profile and maximum smoothness of the surface in order to minimize friction and wear. The rims of worm wheels are made of centrifugally cast bronze, machine to mate with the worm. The bronze alloy may be of phosphor, copper-tin or copper-tin-nickel composition of low coefficient of friction. Centrifugal casting results in a fine and perfect homogeneity of material structure with a great fracture resistance and good sliding properties.

Worm thread surfaces are involute helicoids with a normal pressure angle of 15 or 20 degrees. It should be noted that as the pressure angle is increased above 20 degrees, the tooth is subjected to increased compressive force and it becomes necessary to use lubricants suitable for higher unit pressures.

The number of starts of the worm n is directly related to the gear ratio i_G:

$$i_G = \frac{N}{n} \tag{5.21}$$

where,

N is the number of teeth of the worm wheel; as a rule

$$N \geq 36 \text{ for pressure angle } 15^\circ$$
$$N \geq 24 \text{ for pressure angle } 20^\circ$$

The maximum number of teeth of the worm wheel is 85. The maximum gear ratio depends on the number of starts. A typical under driven worm gear developed by OTIS Co, is shown in Plate (5.2).

The tooth efficiency of worm gearing η_G may be expressed by Equation (5.22) (excluding bearing and oil-churning losses):

$$\eta_G = \frac{tg\lambda}{tg(\lambda + \phi)}$$
$$tg\phi = \frac{\mu}{\cos\alpha_n} \tag{5.22}$$

where,

λ is the lead angle of the worm thread at the worm reference diameter,
μ is the coefficient of friction and
α_n is the normal pressure angle.

Equation (5.22) is valid in the case of worm driving only. When the reversal of power transmission takes place (worm wheel driving), the tooth efficiency will be given by the equation:

$$\eta'_G = \frac{tg(\lambda - \phi)}{tg\lambda} \tag{5.23}$$

The coefficient of friction depends upon a number of factors, namely the material, surface finish, speed, kind of lubricant, tooth load, accuracy and rigidity of mounting. Experimentally determined values of μ are currently used including the bearing losses on the worm and worm wheel shaft.

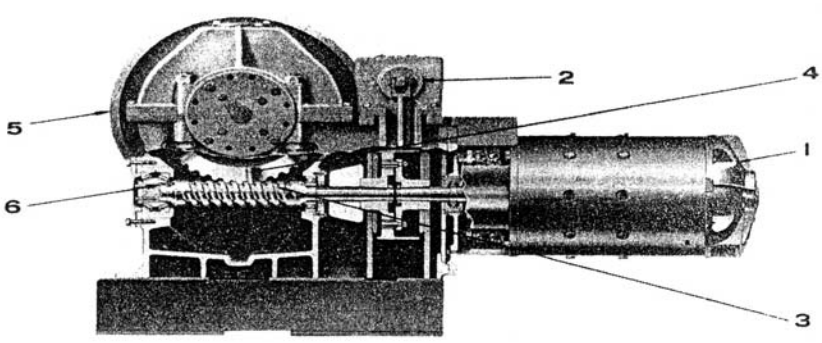

A typical under-driven worm gear (OTIS elevator Co.)

1 AC driving motor
2 DC brake
3 Worm and worm shaft machined in one piece
4 Worm wheel
5 Traction sheave
6 Tapered roller bearings.

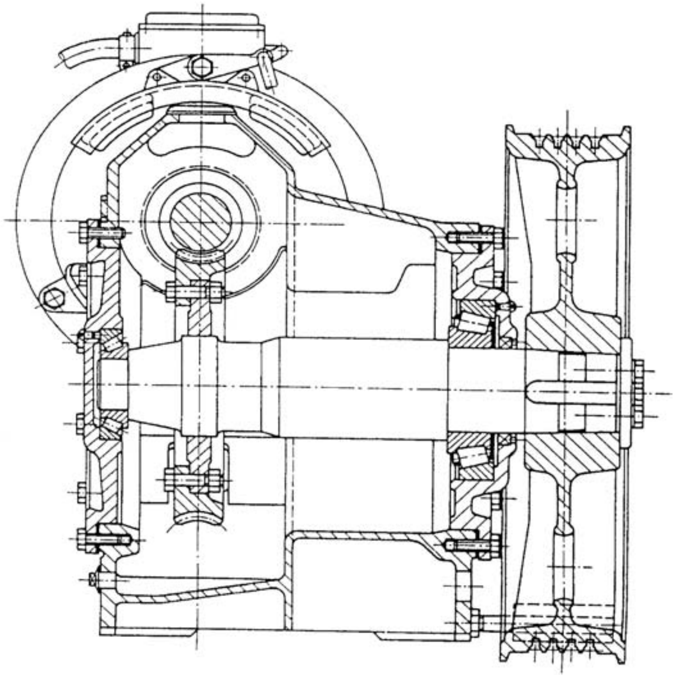

Sectional view of low-speed shaft with the sheave overhung [OTIS Elevator Co.]

Plate 5.2. Geared elevator machines.

The $tg\phi$ in Equation (5.23) is dependent on the rubbing speed of the corresponding tooth surfaces with pressure angle of 20°. For case hardened ground and polish steel worms are generally lubricated by a mineral oil having a viscosity of between $(60\text{–}130) \times 10^{-6}\,\mathrm{m^2/s}$ at 60°C. The viscosity is generally $\upsilon_{50} = 95\,\mathrm{mm^2/s}$ to $110\,\mathrm{mm^2/s}$ for synthetic and mineral oils respectively.

The following some values have been evaluated:

$\mu = coefficient\ of\ friction/tg\phi$	Rubbing speed $= \upsilon_s/\mathrm{ms^{-1}}$
8×10^{-3}	0
10^{-2}	7.5
2	5
4	2.5
8	0.25
10^{-1}	0.05

The rubbing speed υ_s is given by:

$$\upsilon_s = \frac{\upsilon_p}{\cos\lambda} \quad (\mathrm{m/s}) \tag{5.24}$$

where,
υ_p = circumferential velocity on the worm reference diameter (m/s).

5.8.2.1.2 *The capacity and choice of worm diameter*

Based on *BS: 721*: Worm Gearing 1993 and American National Standard ANSI/AGMA 6034-A87, the capacity of worm gear drives may be determined from several considerations:

(a) thermal capacity,
(b) wear capacity,
(c) tooth strength capacity,
(d) shock capacity.

Capacity ratings for worm geared elevator machines are based primarily on the thermal performance calculations. The wear capacity (durability) ratings should also be carried out in order to ensure the required life of worm gearing, while the gear-tooth strength is never a limited factor for the worm gearing in elevator installations.

Choice of worm diameter is limited by considerations of strength and deflection of the high-speed shaft, in order to achieve a correct tooth engagement and high efficiency. Since the efficiency of the gear increases as the worm diameter is reduced the worm diameter should be as small as possible consistent with adequate strength at the root section of the worm and permissible deflection.

The extreme values of the mean worm diameter D_1 at midpoint of working depth of thread may be calculated from the following empirical formula:

The maximum value

$$D_{1\ \max} = \frac{C^{0.875}}{1.07} \quad (\mathrm{mm}) \tag{5.25}$$

The minimum

$$D_{1\ \min} = \frac{C^{0.875}}{2.0} \quad (\mathrm{mm}) \tag{5.26}$$

where,
C = is the gear centre distance (mm).

The maximum radial deflection of the worm at the pitch point $y_{\max}$ is limited to

$$y_{\max} = 0.025\sqrt{t} \quad (\mathrm{mm}) \tag{5.27}$$

where,

t is the axial pitch (mm). The axial pitch is the lead of worm thread divided by the number of starts.

5.8.2.1.3 *Thermal performance*

The temperature of the lubricant in the area of the engaging teeth is the limiting factor for the thermal capacity of gearing. If the temperature is too high, the oil film may fail at moderate tooth pressures, with the result that the structure of the metal may be affected by the progressive increase in temperature, causing disintegration of the bronze worm wheel. Since the efficiency of worm gearing is generally lower than with other types of gearing and the heat generated is directly proportional to the power loss, the heat to be dissipated from a worm drive may be considerable.

The factors that influence the rate of heat dissipation from a worm gearbox are:

(a) the surface area of the gearbox,
(b) the movement of the lubricant inside the box,
(c) the motion of the air outside the box which may be forced by means of a fan fitted on the worm shaft.

The heat dissipated from the gearbox at the maximum permissible temperature rise Q must be greater than or at least equal to the power loss P_v, i.e.

$$Q \geq P_v \tag{5.28}$$

The power loss P_v may be calculated from the equations:

$$\eta_o = \frac{P_1 - P_v}{P_1} = \frac{P_2}{P_2 + P_v} \quad \text{for worm driving} \tag{5.29}$$

or

$$\eta_o' = \frac{P_1}{P_1 + P_v} = \frac{P_2 - P_v}{P_2} \quad \text{for worm wheel driving} \tag{5.30}$$

where

η_o is overall efficiency of worm gearing (including bearing and oil-churning losses) for worm driving
η_o' is overall efficiency of worm gearing for worm wheel driving.
P_1 is the output of the motor during the time period t_1,
P_2 is the output of the motor during the time period t_2 etc.

Subscript 1 refers to the high-speed shaft, subscript 2 to the low-speed shaft.

The heat dissipated from the gearbox at a stationary rate heat transfer:

$$Q = \left[\frac{\theta_L - \theta_S}{1.03 + 0.01\sqrt{0.1 n_{1w}}} - 1.5\right] \times K \quad (KJ/s) \tag{5.31}$$

where,

θ_L is the maximum permissible temperature of oil in the gearbox (°C) (quoted by the oil companies)
θ_S is the temperature of ambient air (°C)
n_{1w} is the r.p.m. of the worm
A_S is the outer surface of the gearbox (m^2).

The outer surface may be calculated:

$$A_S = 9 \times 10^{-5} \times X^{1.85} (\text{m}^2) \tag{5.32}$$

where, $X =$ gear centre distance (mm).

For well-designed gearboxes from the aspect of cooling (well-arranged cooling ribs) or:

$$A_S = 9 \times 10^{-5} \times X^{1.8} (\text{m}^2) \tag{5.33}$$

Heat transfer is determined using the transfer coefficient K. The units are $J/m^2 \times m^{-1} sec^{-1}$.

If the direction of rotation is reversed, a change in direction of the tangential forces and axial thrusts will take place causing a change in the configuration of reaction forces on the supports (bearings). In the event of the worm wheel driving, not only the tooth efficiency will be changed, but also formula for F_a and F_r will be alerted, their denominators being converted to $tg(\lambda - \phi)$ and $\sin(\lambda - \phi)$, respectively. A complete analysis should be done to find the most critical load for each component of the system.

5.8.3 *Brake and braking systems*

5.8.3.1 *Introduction*

The elevator braking system, which must be set in operation automatically in the event of loss of power supply and/or loss of supply to the control circuits, must be provided with an electromechanical friction brake. This brake must be capable of stopping the machine when the car with 125% of rated load is traveling at its rated speed and holding the system at rest afterwards. The retardation must not be in excess of that resulting from the operation of the safety gear or by stopping the car on its buffers.

The brake is usually mounted on the high-speed shaft (motor shaft), because of the braking torque being relatively small here, provided that the shaft is coupled to the sheave (drum, sprockets) by direct mechanical means. With indirect-drive machines, utilizing V-belts, toothed drive belts or drive chains, the brake must be located on the traction sheave (drum) assembly side of the machine so as to be fully effective in the event of the belt set or chain set failure.

The brake must be applied by compression springs or by gravity. It can be released either electromagnetically or electrohydraulically. The interruption of the current must be controlled by at least two independent electric devices. Braking should occur as the electric circuit operating the braking is interrupted. When the machine is fitted with a manual emergency operating device, the brake must be so designed to enable releasing by hand and constant effort must be exerted to keep the brake open in that case. The most common form of elevator brake is an electromagnetic brake, consisting of a spring assembly, brake shoes with linings and a magnet assembly.

Elevator brakes are mostly of external contracting type, equipped with two shoes, but occasionally brakes of internal expanding type occur with gearless machines of large dimensions. Band brakes are not allowed to be used with elevators and the application of disc brakes is rare.

Friction spring devices are fitted to the brake shoes to prevent 'trailing' on the brake drum. The magnet may be mounted directly on one operating arm and exert a horizontal force for the brake release. It can be located in vertical position and can act upon the arms through a system of linkages.

The electronic control unit of the brake monitors the following elevator conditions:

(a) overspeed
(b) stand still
(c) start
(d) power failure.

The heat transfer coefficient K is:

$$K = 6.6 \times 10^{-3} \times \left[1 + 0.4 \left(\frac{n_1}{60}\right)^{0.75}\right] \quad \left(\frac{KJ}{m^2} \times \frac{1}{m\,\mathrm{sec}}\right) \tag{5.34}$$

For under-driven worm gears and a fan mounted on the worm shaft, and:

$$K = 6.6 \times 10^{-3} \times \left[1 + 0.23 \left(\frac{n_1}{60}\right)^{0.75}\right] \quad \left(\frac{KJ}{m^2} \times \frac{1}{m\,\mathrm{sec}}\right) \tag{5.35}$$

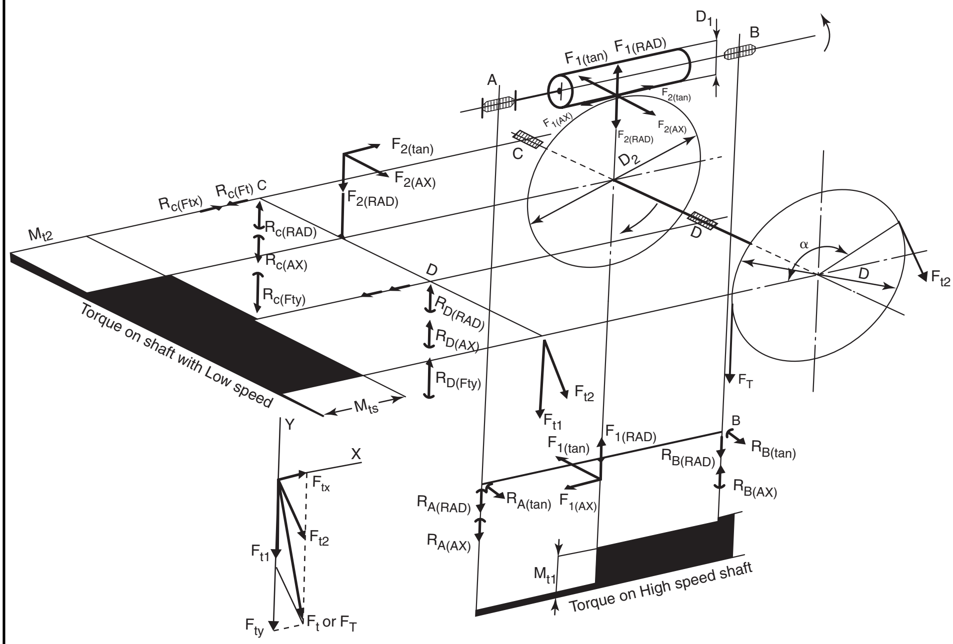

Figure 5.1. Keynote: Reactions due to force in direction specified – axial, radial, horizontal or circumferential.

Plate 5.3. Reactions due to force in direction specified (axial, radial, horizontal).

In the event of the load and/or the speed being variable the equivalent output P_e is decisive for the worm gearing rating, given by the formula:

$$P_e \approx \frac{P_1 \times t_1 + P_2 \times t_2 + K}{t_1 + t_2 + K} \quad \text{(kW)} \tag{5.36}$$

Worm/worm wheel driving and interaction with tension in elevator ropes, cause individual forces on torques on both shafts as are given in Figure (5.1) of Plate (5.3).

Tangential, radial and axial forces are now computed as:

Tangential force $F_{\tan}$

$$F_{\tan} = \frac{2M_{t_1}}{D_1} \tag{5.37}$$

Radial force F_{rad}

$$F_{\text{rad}} = \frac{F_{\tan} \times \tan\alpha_n \cdot \cos\phi}{\sin(\lambda_L + \phi)} \tag{5.38}$$

Axial thrust F_{ax}

$$F_{\text{ax}} = \frac{F_{\tan}}{\tan(\lambda_L + \phi)} \tag{5.39}$$

where,

M_{t_1} is torque on the worm (N m),
D_1 is worm reference diameter (m),
α_n is the normal pressure angle,

ϕ is the angle of friction,
λ_L is the lead angle of the worm thread.

$$M_{t_1} = M_m \times \eta_L^2 \quad (N \cdot m) \tag{5.40}$$

where,
$M_m = 9550P/n_m$
P is the output of the driving motor (kW)
n_m is the r.p.m. of the motor (1/min)
η_L is the efficiency of one bearing.

M_{t_2} is torque on the worm wheel (N m)

$$M_{t_2} = M_{t_1} \times i_G \times \eta_G \quad (N \cdot m) \tag{5.41}$$

where,
i_G is gear ratio,
η_G is the tooth efficiency of worm gearing.

M_{t_S} is torque on the traction sheave,

$$M_{t_S} = M_{t_2} \times \eta_L^2 \times \eta_S = \frac{F_{t_1} + F_{t_2}}{2} \times D \quad (N \cdot m) \tag{5.42}$$

where,
F_{t_1}, F_{t_2} are tensile forces on either sides of the sheave (N),
D is the pitch diameter of the sheave (m),
η_S is the efficiency of the sheave.

5.8.3.2 *Braking torque*
Equation (5.43), shows a diagram for the system. If Q is the rated load (kg) and M is the mass of the car and W_{cw} is the counterweight, i is the roping factor and using the following additional data:

m_{SL} = mass of one fall of the suspension ropes (kg)
g_n = acceleration of free fall (m/s^2)
D = sheave diameter
i_G = gear ratio
η_2 = mechanical efficiency.

Then,

(a) $$M_{St} = static\ torque = \left[\frac{1.25Q + M_{cr} + W_{cw}}{i} + m_{SL}\right]\left(g_n \frac{D}{i_G} \cdot \eta_2\right) \quad (Nm) \tag{5.43}$$

where,
$\eta_2 = \eta_{rS} \times \eta_s \times \eta'_G$
η_{rS} = efficiency of the roping system
η_s = » sheave
η'_G = » mechanical gearing between the motor and the sheave for reversed power transmission.

(b) The dynamic torque M_{ti}

$$M_{ti} = I_T \times \in_{rt} \quad (Nm) \tag{5.44}$$

where,

I_T is the moment of inertia of all moving parts of the system related to the high-speed shaft (brake drum shaft) (kg m^2), and

$\in_{rt}$ is the angular retardation of the high-speed shaft (1/s^2).

The total moment of inertia I_T is calculated as:

$$I_T = I_{rbW} + I_{WS} + I_{TL} \tag{5.45}$$

where,

I_{rbW} is the moment of inertia of the rotor, brake drum and worm (kg m^2),

I_{WS} is the moment of inertia of the worm wheel and sheave (kg m^2), and

I_{TL} is the moment of inertia of all parts of the system which are in linear motion (kg m^2).

Assuming the moment of inertia of the worm wheel and sheave (I_{WSr}), related to their axis of rotation is known, the transmission to the high-speed shaft can be easily carried out using the principle of the conservation of kinetic energy:

$$I_{WS} = I_{WSr}\left(\frac{\eta'_G}{i_G^2}\right) \tag{5.46}$$

Assuming that the same principle in calculating I_{TL} can be applied, the moment of inertia (I_{WSL}) related to the low-speed shaft or traction sheave shaft is calculated by using Eq. (5.47), which expresses the quality of the translational and rotational energies.

$$\frac{1}{2}I_{WSL} \times \omega^2 = \frac{1}{2}\left[(1.25Q + M_{cr} + W_{cw}) \times \nu^2 + m_{SL} \times (i \times \nu)^2\right] \times \eta_{rS} \times \eta_s \tag{5.47}$$

where, ω is the angular velocity of the low-speed shaft (1/s)

$$\omega = \frac{2i + \nu}{D}$$

and ν is the leveling speed of the car and counterweight (m/s).

$$I_{WSL} \times \omega^2 = \left(1.25Q + M_{cr} + W_{cw} + m_{SL} + i^2\right) \times \frac{D^2}{4i^2} \times \eta_{rS} \times \eta_s \tag{5.48}$$

and

$$I_{TL} = I_{WSL} \times \frac{\eta'_G}{i_G^2} \tag{5.49}$$

Substituting from the preceding Equation (5.49), the final equation for I_{TL} is evaluated:

$$I_{TL} = \left(1.25Q + M_{cr} + W_{cw} + m_{SL} + i^2\right) \times \frac{D^2}{4i^2 \times i'_G} \times \eta_2 \tag{5.50}$$

The motion during the braking period is uniformly retarded and the angular retardation $\in_{rt}$ is calculated as:

$$\in_{rt} = \frac{\pi \times n_2}{30t_b} \quad (1/\text{s}^2) \tag{5.51}$$

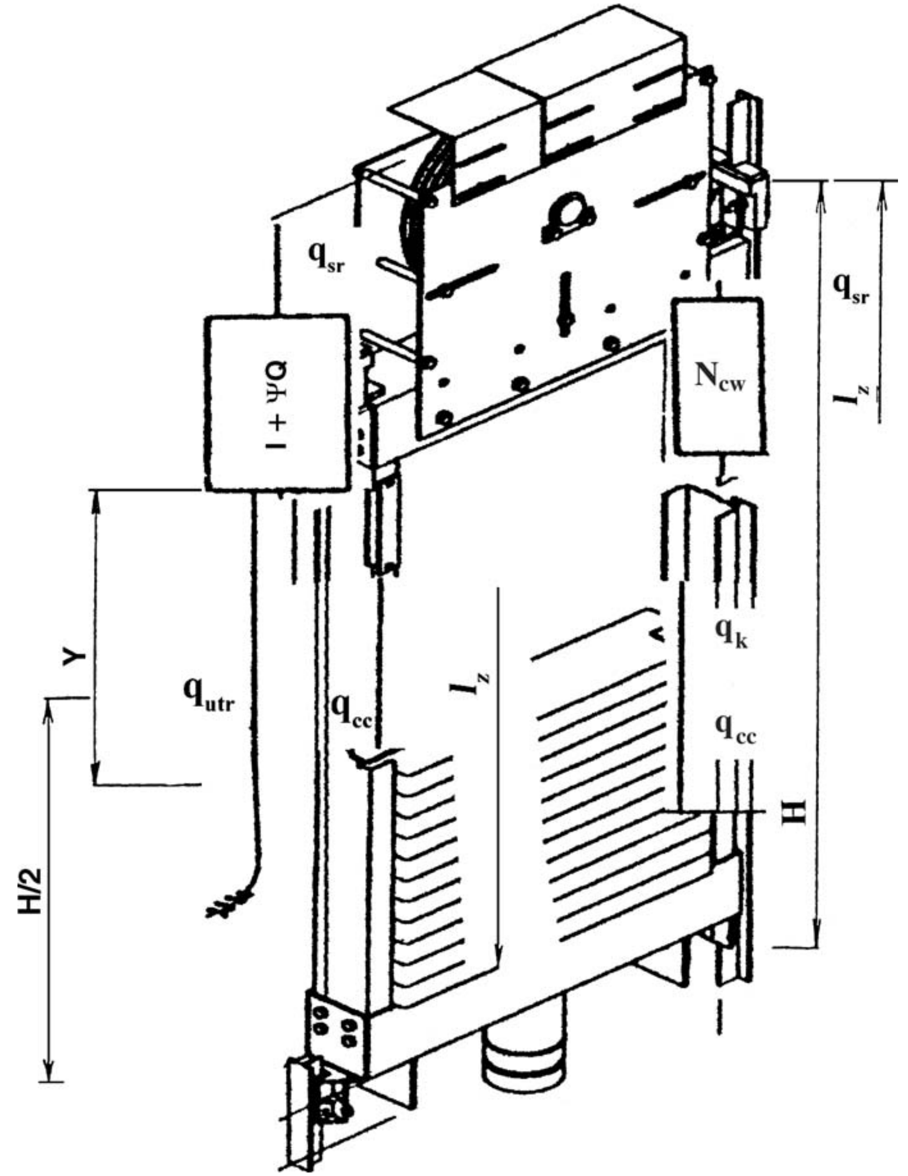

Figure 5.2. A schematic diagram for counterweight.

Plate 5.4. Counterweight.

where,

n_2 are revolutions per minute of the motor at the initial instant of the braking(1/min) and

t_b is the braking time (s).

If the braking time is known, the braking torque required for a safe operation is calculated as:

$$M_b = M_{st} + M_{ti} \quad (N \cdot m) \tag{5.52}$$

If h is the distance from the car to the destination floor when the brake is set in operation and v is the initial car velocity, then:

$$t_b = \frac{2h}{v} \quad (s) \tag{5.53}$$

Hence, if α is the rate retardation (m/s^2), then:

$$t_b = \frac{v}{\alpha} \quad (s) \tag{5.54}$$

Generally, the static torque does contribute to the braking and represented by Eq. (5.54):

$$M_b = -M_{st} + M_{ti} \quad (N \cdot m) \tag{5.55}$$

The actual breaking torque may be determined experimentally by measuring braking time t_b:

$$M_b = \frac{\pi \eta_2 I_1}{30 t_b} \tag{5.56}$$

Note: the finite element analysis for static torque is given in the Appendix III and corresponding comparative results are plotted.

5.9 COUNTERWEIGHT, CAR GUIDE AND CAR FRAME

5.9.1 *Introduction to counterweight*

The counterweight is usually composed of a steel frame, fillers and guiding members attached to the frame. The fillers, generally, are cast iron sections, steel plates and prefabricated concrete blocks. Fillers made of metals require two tie-rods when the rated speed does not exceed 1 m/sec. They look a stacked assembly with tie rods pass through sections reaching the headers (top and bottom members) which extend around the guide rails of the counterweight which also extend around in such a way to guide the counterweight in the hoist way. The counterweight may have an intermediate header too. The ropes having eye bolts for suspension are fastened to the top members.

Figure (5.2) from the Plate (5.4) shows a schematic diagram for calculating counterweight while balancing both sides of the traction sheave. Taking the defined symbols below, it is now easy to arrive at the equation of equilibrium:

M_{CW} = mass of the counterweight (kg)
H = car travel height (m)
q_{sr} = unit weight of the suspension rope (kg/m)
q_{CC} = unit weight of the compensating cable (kg/m)
q_{ult} = unit weight of traveling cable (kg/m)
ℓ_Z = distance of the car to the lowest level (m)
g_n = standard acceleration of free fall (m/sec^2)
$\overline{\psi}$ = coefficient taking into account of the percentage of rated load balanced by the counterweight
y = variable length of the traveling cable under the car (m).

$$\begin{aligned}(Mcr + \overline{\psi}Q)g_n + (H - \ell_Z)q_{sr} \times g_n + \ell_Z q_{cc} g_n + y q_{ult} g_n \\ = M_{CW} g_n + \ell_Z q_{sr} g_n + (H - \ell_Z) q_{cc} g_n\end{aligned} \tag{5.57}$$

Taking $y = \ell_Z/2$ and substituting into Equation (5.57) one gets the following Equation (5.57a):

$$Mcr + \overline{\psi}Q + Hq_{sr} + \ell_Z\left(q_{cc} - q_{sr} + \frac{1}{2}q_{ult}\right) = M_{CW} + \ell_Z q_{cc} + (q_{sr} - q_{cc})\ell_Z \tag{5.57a}$$

or

$$Mcr + \overline{\psi}Q + Hq_{sr} = M_{CW} + q_{cc}H \tag{5.57b}$$

or

$$q_{cc} - q_{sr} + \frac{1}{2}q_{ult} = q_{sr} - q_{cc} \tag{5.57c}$$

From Equation (5.57c), it is now easy to determine the unit weight compensating cables.

$$q_{cc} = q_{sr} - \frac{1}{4}q_{ult} \tag{5.58}$$

Substituting the value of q_{cc} into Equation (5.56), the correct mass required for the counterweight is given as:

$$M_{CW} = Mcr + \overline{\psi}Q + \frac{1}{4}q_{ult}H \tag{5.59}$$

Various parameters for counterweight and guide rails are given on Plates (5.5) and (5.6).

D.E. 5.8 EXAMPLE ON BRAKING TORQUE OF THE PASSENGER LIFT

Determine the braking torque of an Electromagnetic brake for a passenger lift, using the following data on various parameters:

I_m = motor moment of inertia = $0.46\,\text{kg m}^2$
I_b = braking Drum of inertia = $0.41\,\text{kg m}^2$
n_{rs} = Efficiency of roping system = 0.9695
n_s = Efficiency of traction sheave = 0.959
n'_G = Efficiency of worm gearing for worm wheel driving = 0.82
n_m = $1{,}500\,\ell/\text{min}$
$n_s = 110 = \dfrac{60\upsilon}{\pi D} = \dfrac{60 \times 3.2}{\pi \times 0.55} \approx 110$
n_n = motor r.p.m.
D = 0.55
Q = 1000 kg
W_{cw} = 1950
m_{SL} = 95.7
α = $0.765\,\text{m/sec}^2$
i = 95.655
υ = 1.6

Adopt the moment of inertia of worm wheel and sheave = 20% I_m and I_b.

$$M_{st} = \textit{static torque} = \left[\frac{1.25Q + M_{cr} - Wcw}{i} + m_{si}\right] \times g_n \frac{D}{2i'_G} \times n_{rs} \times n_s \times n'_G$$

$$i'_G = \frac{n_m}{n_s} = \textit{gear ratio} = \frac{1500}{110} = 13.6364$$

$$M_{st} = 495.7 \times 9.81 \frac{0.55}{2 \times 13.6364} \times 0.762395 = 74.765 \text{ Nm}$$

$$M_{ti} = dynamic\ torque = I_T \in_{rt}$$

$$I_T = I_{rbw} + I_{ws} + I_3$$

$$I_{rbw} = I_m + I_b = 0.87 \text{ kgm}^2$$

$$I_{rbw} + I_{ms} = 1.2 \times 0.87 = 1.044 \text{ kgm}^2$$

$$I_T = \left(1.25Q + M_{cr} + Wcw + m_{si}i^2\right) \frac{D^2}{4i_G^2 + i} \eta_{rs}\eta_s\eta'_G$$

$$= 1250 + 1500 + 1950 + 95.665 \times 4 \frac{(55)^2}{4 \times 13.634 \times 4} \times 0.762395$$

$$= 0.4028 \text{ kgm}^2$$

I = total moment of inertia related to high speed shaft

$$= 1.044 + 0.4028 = 1.4468 \text{ kgm}^2$$

$\in_{rt}$ = angular retardation

$$= \frac{\pi n}{30 t_b} = \frac{\pi \times 1500}{30 t_b} 1/\text{sec}^2$$

t_b = braking time

$$= \frac{\upsilon}{\alpha} = \frac{1.6}{0.765} = 2.0915 \text{ sec}$$

$$\in_{rt} = 75.134 \text{ 1/sec}^2$$

$$M_{ti} = 1.4465 \times 75.134 = 108.68 \text{ Nm}$$

M_b = total braking torque

$$= M_{st} + M_{ti} = 74.765 + 108.68 = 183.445 \text{ Nm.}$$

5.9.2 *Guide-rails*

5.9.2.1 *Introduction*

The functions of the guide rails as stated car lire are to:

(a) guide the car and counterweight in their vertical travel by controlling horizontal movement,
(b) prevent tilting of the car under eccentric loads,
(c) stop and restrain the car when safety gear is applied.

Two rigid steel guide rails at least should be provided which are made in steel of tensile property

$$f_y \quad \not< 370 \text{ N/mm}^2 \quad \not> 520 \text{ N/mm}^2$$

Guide rails are either cold drawn or machined according to the following codes or their equivalent.

British Standard BS 5655: Part 9, 1985 and ISO 7465 and ANSI/ASME A17.1.

Plates (5.5) and (5.6) give tabulated data for various parameters when the rails are cold drawn or machined. The most important ones to investigate are guide rail joints and guide rails in the hoist-way.

5.9.2.2 *Analysis of guide rails*

Guide rails are subjected to three operating conditions:

(a) Load unevenly distributed on the car floor.
(b) Loading and unloading phenomenon.
(c) Safety gear operation.

Cases (a) and (c) for deflection calculations are maintained, while case (b) assumes the role of finding stresses in the guide rail.

T-Section guide rail dimensions

Nominal weight lb/f [kg/m]	Nominal dimensions inches [mm]				
	A	B	C	D	E
8 [11.92]	$2\frac{7}{16}$ [62]	$3\frac{1}{2}$ [89]	$\frac{5}{8}$ [15.875]	$1\frac{1}{4}$ [31.75]	$\frac{5}{16}$ [7.9375]
11 [16.39]	$3\frac{1}{2}$ [89]	$4\frac{1}{2}$ [108]	$\frac{5}{8}$ [15.875]	$1\frac{1}{2}$ [38]	$\frac{5}{16}$ [7.9375]
12 [17.88]	$3\frac{1}{2}$ [89]	5 [127]	$\frac{5}{8}$ [15.875]	$1\frac{3}{4}$ [44.95]	$\frac{5}{16}$ [7.9375]
15 [22.35]	$3\frac{1}{2}$ [89]	5 [127]	$\frac{5}{8}$ [15.875]	$1\frac{31}{32}$ [50]	$\frac{1}{2}$ [12.7]
18.5 [27.565]	$4\frac{1}{4}$ [108]	$5\frac{1}{2}$ [140]	$\frac{3}{4}$ [19]	$1\frac{31}{32}$ [50]	$\frac{1}{2}$ [12.7]
22.5 [33.525]	4 [100]	$5\frac{1}{2}$ [140]	$1\frac{1}{8}$ [28.575]	2[50.8]	$\frac{9}{16}$ [14.30]
30 [44.7]	5 [127]	$5\frac{1}{2}$ [140]	$1\frac{1}{4}$ [31.75]	$2\frac{1}{4}$ [57.15]	$\frac{11}{16}$ [17.5]

Solid clips, which are steel forgings and are used where strength is the main criterion, i.e. where guide rails are subjected to high loads. They are currently employed with heavy-duty freight elevators, hydraulic rucksack elevators etc.

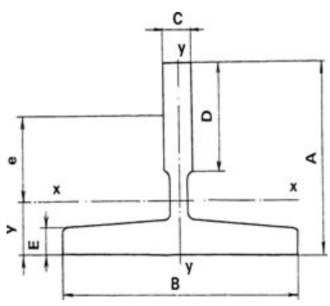

T-section guide rail [A17.1]

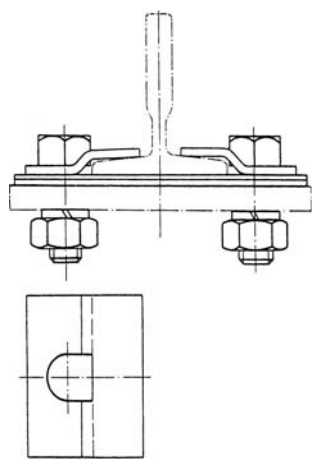

Fixing guide rail by means of pressed clips [Wittur Aufzugtile GmbH]

Plate 5.5. Car and counterweight guide rails. (American Standard A17.1)

Various methods can be adopted to evaluate moments and stresses and they are:

(i) Flexibility Method of Analysis
(ii) Stiffness Method of Analysis
(iii) Finite Element Method of Analysis.

Dimensions of guide rail sections

Designation A = Cold drawn B = Machined	b (mm)	h (mm)	k (mm)	n (mm)	c (mm)	g (mm)	f (mm)	p (mm)	y (mm)
T 50/A	50.0	50.0	5.00	39.0	–	–	–	5.0	14.3
T 70-3/B	70.0	49.2	15.88	25.4	9.5	7.9	9.5	–	17.3
T 75-3/B	75.0	62.0	10.00	30.0	8.0	7.0	9.0	–	18.6
T 89/B	89.0	62.0	15.88	33.4	9.5	7.9	11.1	–	20.7
T 127-1/B	127.0	88.9	15.88	44.5	9.5	7.9	11.1	–	27.0
T 127-2/B	127.0	88.9	15.88	50.8	9.5	12.7	15.9	–	24.6
T 140-1/B	139.7	107.9	19.00	50.0	12.7	12.7	15.9	–	32.0
T 140-2/B	139.7	101.6	28.60	50.8	19.0	14.3	17.0	–	34.8
T 140-3/B	139.7	127.0	31.70	57.1	25.4	17.5	25.4	–	44.2

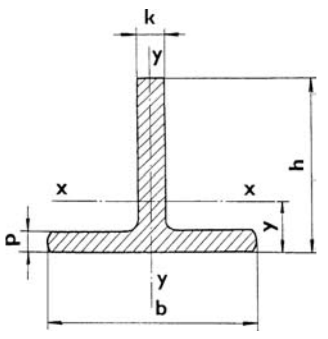

Cross-section of cold drawn guide rail

Physical properties of guide rails

Designation A = Cold drawn B = Machined	S ($x10^2 mm^2$)	q (kg/m)	J_x ($x10^4 mm^4$)	W_λ ($x10^3 mm^3$)	i_λ (mm)	J_y ($x10^4 mm^4$)	W_y ($x10^3 mm^3$)	i_y (mm)
T 50/A*	4.75	3.73	11.24	3.15	15.4	5.25	2.10	10.5
T 70-3/B	11.54	9.30	27.50	8.52	15.2	25.80	7.54	15.0
T 75-3/B*	10.99	8.63	40.35	9.29	19.2	26.49	7.06	15.5
T 89/B9	15.70	12.30	59.60	14.50	19.5	52.50	11.80	18.3
T 127-1/B*	22.50	17.80	187.00	30.00	28.6	151.00	24.00	26.5
T 127-2/B*	28.90	22.70	200.00	31.00	26.3	234.00	36.80	28.5
T 140-1/B	35.10	27.50	403.00	52.90	33.8	310.00	44.40	29.7
T 140-2/B	43.22	32.70	452.00	67.50	32.5	365.00	52.30	29.2
T 140-3/B	57.35	47.60	946.00	114.00	40.6	488.00	70.00	29.2

* Guide rail specified in ISO 7465.

Plate 5.5a. Car counterweight guiding. (Physical properties and British Standard/ISO Standard).

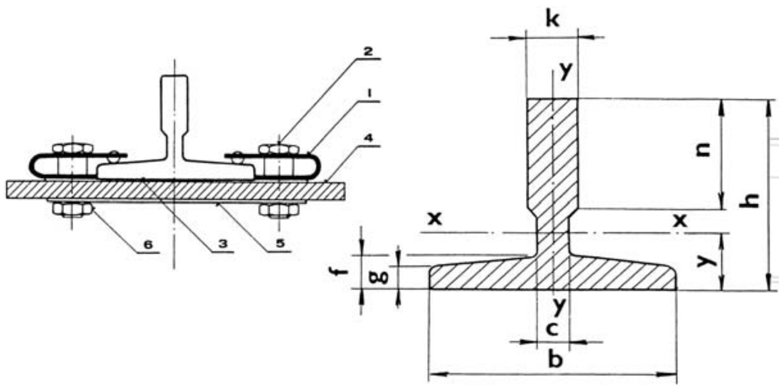

Fixing guide rail by means of spring clips (British Guide Rails Ltd).

The clips 1 are clamped by means of shoulder screws 2 onto a skid plate 3, designed to reduce sliding friction and bi-metallic corrosion. Clips are secured to the guide rail bracket 4 by a clamp plate 5 fitted with weld nuts 6.

Plate 5.5a. (*Continued*)

In all circumstances the guide rail can be treated as a continuous beam with different of supports and is generally subjected to the combined effect of the braking acting longitudinally along the length of the beam and the outer moment reduced due to this force placed in an eccentric position. The supports for technical reasons are spaced equally. The bending moment M_{OLZ} and its maximum corresponding moment M_{OLZ}^{m} can be computed using anyone of the above methods. Plate (5.7) shows a typical layout of the guide rails with eccentric load applied. Let the braking force be 'F_b' and the eccentricity be 'e'. Plates (5.5) and (5.6) give the summary of the moments and locations and stresses in the guides during safety gear operation.

STRESSES IN THE GUIDES DURING SAFETY GEAR OPERATION (Based on U.S. A17.1 and EN 81)

There is no agreement on the best method. The US-A17.1 uses graphical methods. Annex G (informative) of the prEN 81: 1994 is complex and not transparent. The older EN 81 standards differentiate for the type of safety gear employed and provided the following method.

The stress may be calculated from the following formulas:

$$\sigma_k = \frac{25(M+Q)\omega_b'}{A}\ \text{N/mm}^2 \qquad \text{Instantaneous safety gear (except captive roller)} \qquad (5.60)$$

$$\sigma_k = \frac{15(M+Q)\omega_b'}{A}\ \text{N/mm}^2 \qquad \text{Captive roller safety} \qquad (5.61)$$

$$\sigma_k = \frac{10(M+Q)\omega_b'}{A}\ \text{N/mm}^2 \qquad \text{Progressive safety gear} \qquad (5.62)$$

where,

- M is the weight of an empty car, any traveling cables, compensating devices, etc, suspended from the car (kg).
- Q is the rated load (kg).
- A is the cross-sectional area of the guide (mm^2).
- ω_b' is the buckling factor.

Guide Rail Clips

Pressed Steel Clips

Designation	Physical Dimensions															
	1	2	3	4	5	6	7	8	9	10	11	12	13	14	15	16
	mm	mm	mm	mm	mm	mm	mm	mm	mm	mm	mm	mm	mm	mm	mm	mm
SC 8	63.50	31.75	14.30	11.10	22.22	10.32	22.23	R22.23	7.60	R1.60	R2.40	23.81	R3.20	50.80	3.18	8.47
SC 12	76.20	38.10	17.46	14.29	28.58	12.70	30.16	R30.20	7.60	R1.60	R2.40	33.34	R3.20	68.26	4.76	9.53
SC 15	76.20	38.10	17.46	14.29	28.58	12.70	30.16	R30.20	12.40	R1.60	R3.20	33.34	R4.76	68.26	4.76	14.29
SC 22	76.20	38.10	20.63			15.12	18.49	R57.03	13.60			31.17	R3.60	69.06	6.35	15.50

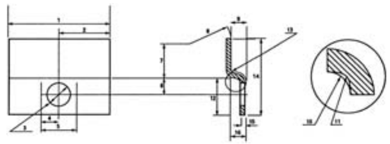

Forged Steel Clips

Designation	Physical Dimensions												
	1	2	3	4	5	6	7	8	9	10	11	12	13
	mm	mm	mm	mm	mm	mm	mm	mm	mm	mm	mm	mm	mm
DF 300	12.70	3.18	23.81	13.49	12.70	9.53	20.64	46.04	23.02	R17.50	13.50	41.28	23.81
DF 301	15.88	3.18	36.51	14.29	15.90	13.49	25.40	52.39	26.20	R17.50	17.50	57.15	30.17

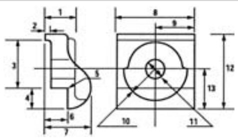

Forged Steel Clips ('T' Style)

Designation	Physical Dimensions								
	1	2	3	4	5	6	7	8	9
	mm	mm	mm	mm	mm	mm	mm	mm	mm
T1	33.0	23.0	16.0	11.0	5.5	12.0	6.0	27.0	M10
T2	40.0	27.0	18.0	13.0	6.0	14.0	7.0	28.0	M12
T3	45.0	29.0	21.0	16.0	8.5	12.0	9.0	35.0	M14
T4	54.0	37.0	24.0	19.0	11.0	15.0	10.0	40.0	M16

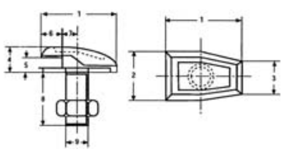

2 Guide Rail Systems

Spring Clip Assemblies

Clip	Rail Section
SP 8	T89
SP12	T127-1
SP15	T127-2
SP18	T140-1
SP22	T140-2

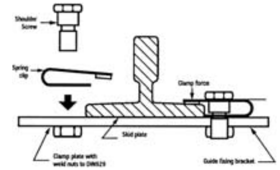

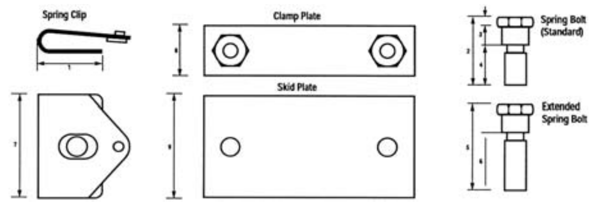

Spring Clips

2 mm The normal range of the 2 mm clip is for rails T89 & T127-1. The clip must not be used outside this range.

	1	2	3	4	5	6	7	8	9		Clamp Plate	Skid Plate
mm	37.5	43.0	5.0	25.0	55.0	37.0	63.0	30.0	63.0	T89	SC0067	SC0061
										T127-1	SC0068	SC0062

3 mm The normal range of the 3 mm clip is for rails T127-2 and above

	1	2	3	4	5	6	7	8	9		Clamp Plate	Skid Plate
mm	37.5	43.0	5.0	25.0	55.0	37.0	63.0	30.0	63.0	T127-2	SC0069/1	SC0063
										T140-1/2	SC0069/2	SC0064

Additional Information	
Spring Clip	Clips are manufactured from CS70 spring steel and are finished witha Zinc Oxide coating to provide a salt spray resistance of between 240 and 500 hours (ASTM B117).
Skid Plates	Manufactured from 18 gauge stainless steel (grade 304) to reduce sliding friction and bi-metallic corrosion.
Clamp Plates	Manufactured in mild steel and fitted with weld nuts to DIN 929. Assembly zinc plated and passivated after spot welding.
Shoulder Bolts	Manufactured in mild steel zinc plated and passivated. The bolts are available in two lengths.

Guide Rail Systems 3

Plate 5.6. Guide rail clips-types (with compliments from CORUS, U.K.).

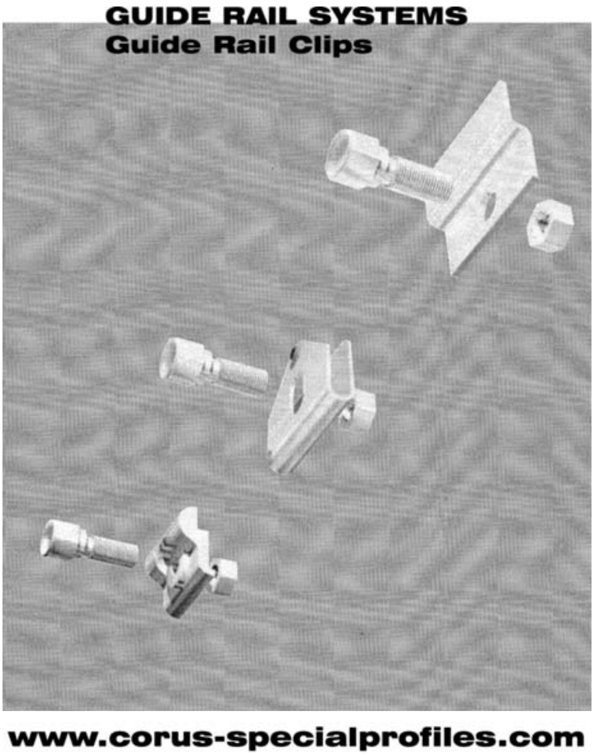

Plate 5.7. (With compliments from CORUS, U.K.)

If the coefficient of slenderness (λ) is given by:

$$\lambda = \frac{d_k}{i} = d_k\sqrt{\frac{A}{I}} \tag{5.63}$$

where,

- i is the radius of gyration (mm) given by $\sqrt{\frac{I}{A}}$.
- I is the moment of inertia (mm^4) of the cross-sectional area.
- d_k is the maximum distance between the guide-rail brackets (mm).

Table to find buckling factor (ω_b') (extract from EN 81)
Slenderness (λ) values from 20 to 240.
Strengths of steel 370 and 520 n/mm^2.

λ	20	40	60	80	100	120	140	160	180	200	220	240
370	1.04	1.14	1.30	1.55	1.90	2.43	3.31	4.32	5.47	6.75	8.17	9.73
520	1.06	1.19	1.41	1.79	2.53	3.65	4.96	6.48	8.21	10.1	12.2	14.5

Notes: (1) Only three significant figures.
(2) Use interpolation for any intermediate values.

Guide-rails strength = 370 N/mm^2
$M = 700$ kg;
$Q = 650$ kg
$A = 1078$ mm^2;
$d_k = 2500$
$I = 308{,}000$ mm^4.

Equation (5.63) gives

$$\lambda = 2500\sqrt{\frac{1078}{308{,}000}} = 147.9$$

From left-hand support
Generalised equations $[(F_b \times e)]$ in span I.

Number of spans	$M_o(F_b \times e)$ in span I	Maximum value M_{max}	Location of the extreme L_{Zm}
2	$\frac{(F_b \times e)}{4L^3} \times (5L^2 \times L_Z - 3L_Z^3)$	$0.6211(F_b \times e)$	$0.7454L$
3	$\frac{(F_b \times e)}{15L^3} \times (19L^2 \times L_Z - 12L_Z^3)$	$0.6135(F_b \times e)$	$0.7265L$

From left-hand support
Generalized equations $[(F_b \times e)]$ in span II.

Number of spans	$M_o(F_b \times e)$ in span II	Maximum value M_{max}	Location of the extreme L_{Zm}
2	$\frac{(F_b \times e)}{4L^3} \times (2L^2 - 4L^2 \times L_Z^2 + 9L \times L_Z^2 - 3L_Z^3)$	$-0.6210(F_b \times e)$	$0.2546L$
3	$\frac{(F_b \times e)}{15L^3} \times (7L^3 - 14L^2 \times L_Z + 45L \times L_Z^2 - 30L_Z^3)$	$-0.6161(F_b \times e)$	$0.1927L$
		$+0.6161(F_b \times e)$	$0.8073L$

Plate 5.8. Generalised flexibility method for guide rail solutions.

From the table,

$$\omega_b' = 3.69$$

Assuming the case for *progressive safety gear*:

$$\sigma_k = \frac{10(700 + 650) \times 3.69}{1078} = 46.2 \text{ N/mm}^2 < 370 \text{ N/mm}^2 \therefore \text{o.k.}$$

The bending moments are calculated using the *flexibility method* and are given in Plate (5.8) with both generalized for ms and M_{max} equations when the $F_b \times e$ is in Span I and in Span II.

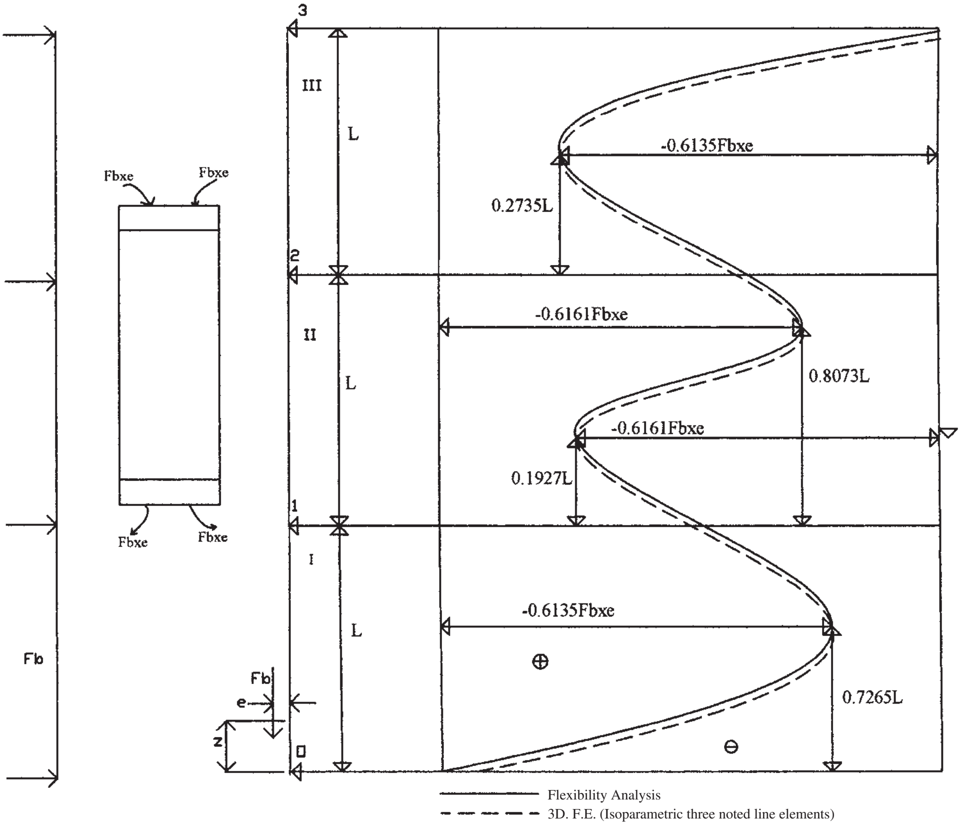

Figure 5.3. Maximum bending moment M_{max} and their location (3 span only).

A similar approach is required to cases where $F_b \times e$ are in Spans III to V. The question arises how to calculate these values.

For Span I

$F_b \times e$ is included. The bending moment at any point,

$$M_{(Z)} = \frac{F_b \times e + M_1}{\ell_Z \times \sin \beta y_d} \times y_d \times \sin \beta \ell_Z (N \cdot m) \tag{5.64}$$

where,

- M_1 is moment at support 1 (Nm)
- ℓ_Z is variable distance from the left support (0) to the point at which the bending moment is calculated (mm)
- y_d is distance from the left support (0) to the point at which the outer moment $F_b \times e$ is acting (mm).

$$\beta^2 = \frac{F_b}{E \times I_x} \tag{5.65}$$

where,

- E is Young's modulus (N/mm^2)
- I_x is moment of inertia of the cross-sectional area of the guide rail, related to the gravity axis *x-x*.

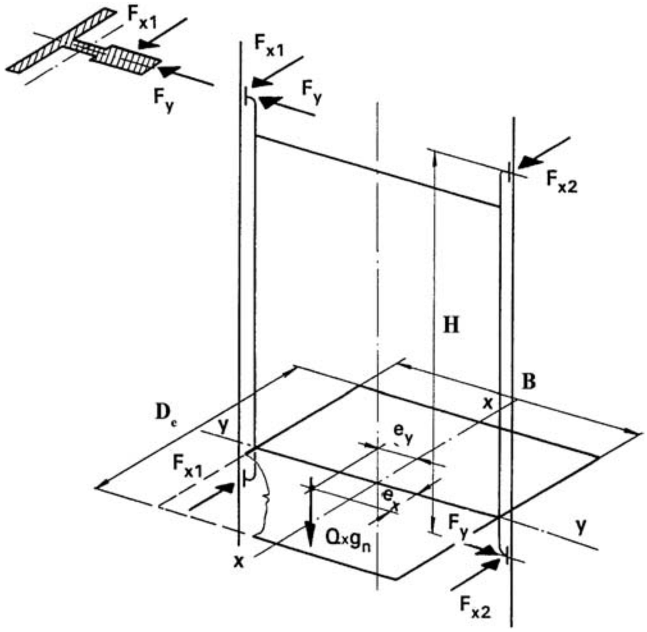

Figure 5.4a. Forces on guide rails due to uneven load distribution.

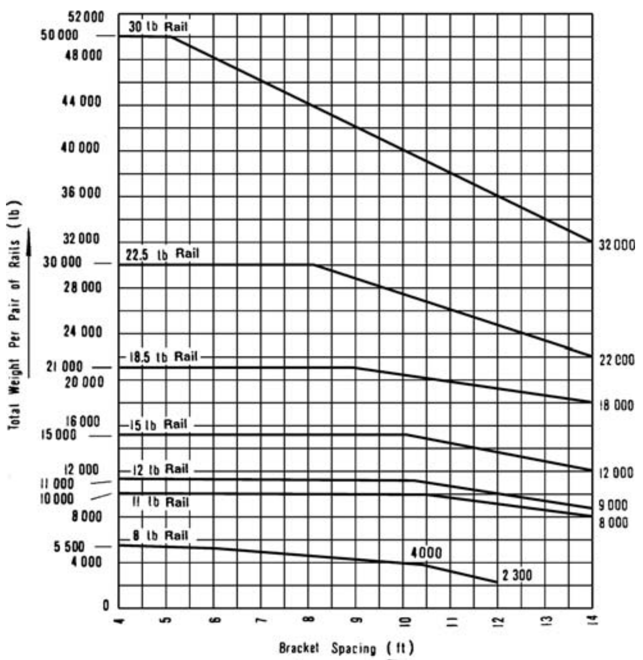

Figure 5.4b. Graph for guide rail.

The extreme value is located at $L_{Zm} = \dfrac{\pi}{2\beta}$

$$M_{\max} = \frac{F_b \times e + M_1}{L \sin \beta y_d} \times y_d \tag{5.66}$$

and

$$\frac{dM(\ell_Z)}{dy_d} = 0 \tag{5.67}$$

The critical position is $y_{d(m)}$ of $F_b \times e$; when $F_b \times e$ is in this position, the absolute maximum of the bending moment M_{max} is achieved. Both $y_{d(m)}$ and M_{max} have already quoted (e.g. $y_{d(m)} = \ell_Z = 0.7251L$ and $M_{max} = 0.6129\ F_b \times e$ for a continuous beam of five fields).

For *Span II*
The formulas obtained from the same initial equation by means of the same flexibility methods are more complicated than for the Span I.

The bending moment,

$$M(\ell_Z) = A_1 \times \cos \beta L_Z + A_2 \times \sin \beta L_Z \tag{5.68}$$

where,

$$A_1 = M_1$$

and

$$A_2 = \frac{(F_b \times e + M_{R2}) \times y_d + M_1 \times (L - y_d - L \cos \beta y_d)}{L \times \sin \beta y_d}$$

where,

M_{R2} is the moment at the right support of the Span II.

The extreme value at support 2,

$$L_{Zm} = \frac{1}{\beta} \cot \frac{B_2}{B_1} \tag{5.69}$$

However, constants of integration B_1 and B_2 depend on the moments at supports, and on the location of the moment $F_b \times e$. In contrast to the Span I, the location of the maximum bending moment (L_{Zm}) is a function of the location of $F_b \times e$ (y_d) in this case.

The maximum value of the bending moment,

$$M_{\max} = M_1 \cos \beta L_{Zm} \frac{(F_b \times e + M_2) \times y_d}{L \sin \beta y_d} \cdot \sin \beta L_{Zm} + \frac{M_1 (L - y_d - L \cos \beta y_d)}{L \sin \beta y_d} \cdot \sin \beta L_{Zm} \tag{5.70}$$

The curve illustrating M_Z may be plotted by superposition of two partial curves, namely $B_2 \times \sin \beta L_Z$ and $B_1 \times \sin \beta L_Z$, of different amplitudes. The amplitudes vary depending on the location of $F_b \times e$.

$B_1 < 0$	$y_d > 0.3804L_Z$	$L_Z > 0$
$B_2 = 0$	$y_d = 0.3804L_Z$	$L_Z = 0$
$B_1 < 0$	$y_d < 0.3804L_Z$	$L_Z < 0$

Various graphs can be drawn for M_Z involving sine curve.

Determination of the deflection
Two cases are considered using the flexibility method:

(1) $F_b \times e$ applied at the right support (1) of the Span I.
(When the safety gear is located under the car floor).

Location of the maximum deflection

$$L_Z = \frac{1}{\beta} \times \cos^{-1} \frac{\cos \beta L}{\beta \times L} \tag{5.71}$$

Maximum deflection

$$\begin{aligned} \delta_{m(\max)} &= \frac{F_b \times e + M_1(L)}{F_b \times \beta \times L} \times \left(\frac{\sqrt{\beta^2 + L^2 - \sin^2 \beta L}}{\sin \beta L} \right) \\ &\quad - \frac{F_b \times e + M_1(L)}{F_b \times \beta \times L} \times arc \cos \frac{\sin \beta L}{\beta \times L} \end{aligned} \tag{5.72}$$

(2) $F_b \times e$ applied at the right support of the Span II.
(When the safety gear is mounted above the car roof).
A quadratic equation for L_{Zm}, is similarly obtained, the roots of which,

$$L_{Zm} = \frac{1}{\beta} \sin^{-1} \frac{-B_1 \cdot S \pm B_2 \sqrt{\alpha^2 L_Z^2 \left(B_1^2 + S_2^2\right) - S^2}}{\left(B_1^2 + S_2^2\right) \times \beta L_Z} \tag{5.73}$$

where,

$$S = \frac{F_b \times e + M_2(L_Z) - M_1(L_Z)}{F_b}$$

The maximum deflection $\delta_{m(\max)}$

$$\begin{aligned} \delta_m &= B_1 \cos \beta L_{Zm} + B_2 \cos \beta L_{Zm} \\ &\quad - \frac{1}{F_b} \left[\frac{F_b \times e + M_2(L_Z)}{L_Z} \times L_{Zm} + \frac{M_1(L_Z)}{L_Z} (L_Z - L_{Zm}) \right] \end{aligned} \tag{5.74}$$

5.9.2.3 *Forces acting on guide rails under normal operation*
Under normal operations the loads can be unevenly distributed in two perpendicular directions. The loads are exerted from the cars as shown in Figure (5.4a).

F_y = forces exerted in the plane Y-Y of the guide rail

F_{x_2} = forces exerted at right angles to the Y-Y plane

F_{x_1} = forces exerted in the X-X plane

The guide rails are subject also to the bending moments produced by forces F_y and combined bending and torsion forces F_x.

On each guide the force F_y, can be computed from:

$$F_y \times H = Q \times g_n \times e_y$$

$$\therefore \qquad F_y = \frac{Q \times g_n \times e_y}{H} \tag{5.75}$$

Similarly the values F_{x_1} and F_{x_2} can be computed as:

$$F_{x_1} = \frac{Q \times g_n \times e_x \times (B + 2e_y)}{2H \times B} \tag{5.76}$$

$$F_{x_2} = \frac{Q \times g_n \times e_x \times (B - 2e_y)}{2H \times B} \tag{5.77}$$

where,

Q is rated load (kg)
g_n is standard acceleration of free fall (m/s^2)
e_y, e_x are eccentricities of the load in the car (mm)
B is width of the car (mm)
D is depth of the car (mm)
H is vertical distance between the car guide shoes (mm).

Assuming $e_x = \frac{D}{8}$ and $e_y = \frac{B}{8}$, Equations (5.75) to (5.77) would assumed the forms as:

$$F_y = \frac{Q \times g_n \times B}{8H} \tag{5.77a}$$

$$F_{x_1} = \frac{5}{64} \frac{Q \times g_n \times D}{H} \tag{5.78}$$

$$F_{x_2} = \frac{3}{64} \frac{Q \times g_n \times D}{H} \tag{5.79}$$

Where counterweight guide rails are involved, due to the alignment of the centre of gravity in relation to the point of suspension, the 20 mm off-centre value should be considered in the X-X and Y-Y plane wherever necessary.

Based on BS 5655: Part 9, the horizontal forces on guide rails 50% of the rated load shall be assumed and shall be placed when CLASS A loading (Passenger and general goods loading) occur at $e_y = B/4$ and $e_x = D/4$.

For CLASS B loading (Motor vehicles loading) the entire rated load is placed at

$$e_y = B/8 \ \ or \ \ e_x = D/12$$

1½ car width -1220 mm i.e; $(0.5B - 1220)$ whichever is $e_x = D/12$ greater.

For CLASS C loading in order to determine horizontal forces on guard rails. The entire rated load is placed at $e_y = B/4$ and $e_x = D/4$.

They are motor or hand track loading.

5.9.3 *Types of guide shoes*

Both the car and counterweight must be guided on each guide rail by upper and lower guiding members attached to the frame.

There are two principal types of guide shoes in existence, namely:

(1) *glide shoes (slipper guides),*
used for low and medium speeds around 2 m/sec.
(2) *roller guides.*
They are composed of three spring loaded rollers which are in permanent contact with the guide rail. They are provided with rubber or polyurethane tires and they are essential for high speed lifts. Noise and vibrations are tolerable and, in fact, are minimized. They operation dry,

lubricated guide rails. Hence, the danger of accumulation of oil and grease in the pit is avoided and so is the fire hazard.

D.E. 5.9 EXAMPLE ON STRESSES AND DEFLECTION IN GUIDE RAILS

Determine the stresses in deflections in guide-rails during safety gear operation due to uneven distribution of loading the car. The following parameters are used when progressive safety gear is employed:
Guide rail profile: TYPE T89/B of 370 N/mm^2 Grade.
Basic dimensions: 89 × 62 × 15.88 370 N/mm^2 Grade.

$I_{xx} = 59.76 \times 10^4\,\text{mm}^4$
$I_{yv} = 52.6 \times 10^4\,\text{mm}^4$
$W_{xx} = 14.6 \times 10^4\,\text{mm}^4$
$W_{yy} = 11.9 \times 10^4\,\text{mm}^4$
$i_{x_2} = 19.6\,\text{mm}$
$i_{yy} = 18.4\,\text{mm}$
$A = 15.75 \times 10^2\,\text{mm}^2$
$E = 2.1 \times 10^5\,\text{mm}^2$

Vertical distance between the guide rails:

$$H = 3.650\,\text{mm}$$

Spacing of guide rail brackets:

$$L = 3.350\,\text{mm}$$

Car width: $B = 1{,}600\,\text{mm}$
Car depth: $D = 1{,}400\,\text{mm}$
$e \approx 25\,\text{mm}$
$Q = 1000\,\text{kg}$;

The coefficient of slenderness:

$$\lambda = \frac{L}{i_{yy}} = \frac{3350}{18.4} = 182.06 \rangle 105$$

The braking force for progressive safety gear:

$$F_b = 10 \times (Q + M) = 25{,}000\ \text{N}$$

Buckling factor for $\lambda = 182.06$ and steel of 370 N/mm^2 grade.
From Table:

$$\omega = 5.50$$

Stress in buckling:

$$\sigma_k = \frac{F_b \times \omega}{A} = \frac{25{,}000 \times 5.50}{15.75 \times 10^2} = 87.30\ \text{N/mm}^2$$

Owing to the magnitude of λ, stress is combined pressure and bending should be of less value:

$$\sigma_k = F_b \times \left[\frac{1}{A} + \frac{e}{2W_{xx}}\right] = 25{,}000 \times \left[\frac{1}{15.75 \times 10^2} + \frac{25}{2 \times 14.6 \times 10^3}\right]$$

$$= 25{,}000 \times [0.0006349 + 0.0008562] = 37.278\ \text{N/mm}^2$$

Stress in buckling is decisive; however, the maximum permissible value of 140 N/mm^2 for steel of 370 N/mm^2 grade was not exceeded.

Lateral forces on guide rails:

$$F_y = \frac{Q \times g_n \times B}{8H} = \frac{1,000 \times 9.81 \times 1,600}{8 \times 3.638} = 537.533 \text{ N}$$

$$F_{x_1} = \frac{5}{64}\frac{Q \times g_n \times D}{H} = \frac{5}{64} \times \frac{1,000 \times 9.81 \times 1,400}{3.650} = 293.973 \text{ N}$$

Deflections in individual planes:

$$\delta_y = \frac{7F_y \times L_Z^3}{480E \times I_{xx}} = \frac{7 \times 537.533 \times 3350^3}{480 \times 2.1 \times 10^5 \times 59.76 \times 10^4} = 2.3484 \text{ mm}$$

$$\delta_x = \frac{7F_{x_1} \times L_Z^3}{480E \times I_{yy}} = \frac{7 \times 293.973 \times 3350^3}{480 \times 2.1 \times 10^5 \times 52.6 \times 10^4} = 1.459 \text{ mm}$$

Total deflection δ_T:

$$\delta_T = \sqrt{\delta_y + \delta_x} = \sqrt{2.3484^2 + 1.459^2} = 2.765 \text{ mm} \approx 3 \text{ mm}$$

In compliance with BS 5655: Part 9, 50% of the rated load is assumed to be placed at a distance from the point of suspension equal to one quarter of the car width or depth (see Section 5.9.2.3, CLASS A loading). Simultaneously eccentricities in two perpendicular directions are not taken into consideration.

Consequently, lateral forces are given by the formulas:

$$F_y = \frac{Q \times g_n \times B}{8H} = 537.533 \text{ N}$$

$$F_x = \frac{5}{64}\frac{Q \times g_n \times D}{H} = 293.973 \text{ N}$$

Deflections in individual planes:

$$\delta_y = \frac{F_y \times L^3}{96E \times I_{xx}} = 1.620 \text{ mm}$$

$$\delta_x = \frac{F_x \times L_Z^3}{96E \times I_{yy}} = 0.807 \text{ mm}$$

The corresponding bending stress will be:

$$\sigma_y = \frac{F_y \times L_Z}{6W_{xx}} = \frac{537.533 \times 3{,}350}{6 \times 14.6 \times 10^3} = 20.56 \text{ N/mm}^2$$

$$\sigma_x = \frac{F_x \times L_Z}{6W_{yy}} = \frac{293.533 \times 3{,}350}{6 \times 11.9 \times 10^3} = 13.793 \text{ N/mm}^2$$

The stress in bending is small.

5.9.4 *Codified methods on stresses in guide rails*

British Standard BS 5655: Part 9

The stress in guide rail during the safety gear operation σ is given by the equation:

$$\sigma_k = \frac{F_b}{A} + \frac{F_b \times e}{2W_{xx}} \times \left[\cos^{-1}\left(\frac{L_k}{2} \times \sqrt{\frac{F_b}{E \times I_x}}\right) + 1\right] \quad (\mathrm{N/mm^2}) \tag{5.80}$$

where,

- F_b is braking force on one guide rail (N)
- A is cross-sectional area of the guide rail ($\mathrm{mm^2}$)
- e is eccentricity of the braking force (horizontal distance from x-x axis of the guide rail cross-section to the point of application of the safety gear jaws (mm)
- W_x is modulus in bending of the guide rail cross-sectional area about x-x axis ($\mathrm{mm^3}$)
- L_k is maximum distance between guide rail brackets (mm)
- E is Young's modulus of elasticity of the guide rail material ($\mathrm{N/mm^2}$)
- I_x is moment of inertia of the guide rail cross-sectional area related to x-x axis ($\mathrm{mm^4}$).

The braking force F_b is specified in BS 5655: Part 1 and in the same way also in the European Standard EN 81.1.

In general the braking force is given by the formula:

$$F_b = \frac{Q + K}{2} \times (\alpha + g_n) \tag{5.81}$$

where,

- K is the mass of the car (kg)
- α is the maximum permissible retardation of the car ($\mathrm{m/s^2}$).

Practical values of the braking force (assuming $g_n = 10\,\mathrm{m/s^2}$) are:

(a) for instantaneous safety gear, excluding captive roller type

$$F_b = 25 \times (Q + M)\,, \quad i.e.\ \alpha = 40\ \mathrm{m/s^2}$$

(b) for captive roller type safety gear

$$F_b = 15 \times (Q + M)\,, \quad i.e.\ \alpha = 20\ \mathrm{m/s^2}$$

(c) for progressive safety gear

$$F_b = 10 \times (Q + M)\,, \quad i.e.\ \alpha = 10\ \mathrm{m/s^2}$$

Then the maximum stress in bending is given by equations:

$$\sigma_y = \frac{F_y \times L_k}{6W_x}, \quad \sigma_x = \frac{F_x \times L_k}{6W_y} \tag{5.82}$$

Horizontal deflections at the midpoint of the beam in two perpendicular directions are given by formulas:

$$\delta_y = \frac{F_y \times L_k^3}{96E \times I_x}, \quad \delta_x = \frac{F_x \times L_k^3}{96E \times I_y} \tag{5.83}$$

European standard EN 81.1
The calculation of stress in guide rails is carried out only for safety gear operation, in the case of buckling, in conformity with the following equation:

$$\sigma_k = \frac{F_b \times \omega}{A} \quad (\mathrm{N/mm^2}) \tag{5.84}$$

where, ω is buckling factor.

5.9.5 *American standard safety code A17.1*

The method of calculation specified in 17.1 is not transparent as it is based on graphs for the calculation of guide rail size without presenting the theoretical background. However, the shape of the graphs is similar to the shape of graphs based on the British criteria.

In the case of a single car or counterweight safety gear being used, the maximum suspended weight of the counterweight, including the weight of any compensating ropes or chains and traveling cables, per pair of guide rails, can be read off the graph.

5.10 DESIGN ANALYSIS FOR BUFFERS

5.10.1 *Introduction*

Lifts (Elevators) are equipped with buffers located in a pit at the bottom limit of travel for both cars and counterweights. There are two types of buffers and they are:

(a) Energy Accumulation Type
(b) Energy Dissipation Type.

The gravity stopping 'S' of a body in free fall from a velocity 'υ' to zero is given by:

$$\upsilon^2 = 2g_n S \tag{5.85}$$

Many details about buffers and their design specifications are given in chapter 4.

5.10.2 *Energy accumulation buffers*

They are with and without buffered return movement. The rated speeds are 1.0 m/sec or 1.6 m/sec for with and without buffered return respectively.

Based on Code EN 81, the total stroke S in meters must not be less than 2 × gravity stopping distance corresponding to 115% of the rated speed υ.

$$S = 2 \times \textit{gravity stopping distance} = 2\frac{(1.15\upsilon)^2}{2g_n} = 0.1348\upsilon^2 \nless 65\,mm \tag{5.86}$$

Generally static loads are for car-counterweights.

In Europe

$$S = [\textit{static for load of (2.5 and 4) times of the car}]\,(M_{cr} + Q) \tag{5.87}$$

In the U.S.A

$$S = [\textit{static for load of (2 and 3) times of the car}]\,(M_{cr} + Q) \tag{5.88}$$

where,

M_{cr} = mass of the car or M_{cw}, the mass of the counterweight
Q = rated load.

Buckling factor ω for steel of 370 N/mm^2 grade

λ	0	1	2	3	4	5	6	7	8	9	λ
20	1.04	1.04	1.04	1.05	1.05	1.06	1.06	1.07	1.07	1.08	20
30	1.08	1.09	1.09	1.10	1.10	1.11	1.11	1.12	1.13	1.13	30
40	1.14	1.14	1.15	1.16	1.16	1.17	1.18	1.19	1.19	1.20	40
50	1.21	1.22	1.23	1.23	1.24	1.25	1.26	1.27	1.28	1.29	50
60	1.30	1.31	1.32	1.33	1.34	1.35	1.36	1.37	1.39	1.40	60
70	1.41	1.42	1.44	1.45	1.46	1.48	1.49	1.50	1.52	1.53	70
80	1.55	1.56	1.58	1.59	1.61	1.62	1.64	1.66	1.68	1.69	80
90	1.71	1.73	1.74	1.76	1.78	1.80	1.82	1.84	1.86	1.88	90
100	1.90	1.92	1.94	1.96	1.98	2.00	2.02	2.05	2.07	2.09	100
110	2.11	2.14	2.16	2.18	2.21	2.23	2.27	2.31	2.35	2.39	110
120	2.43	2.47	2.51	2.55	2.60	2.64	2.68	2.72	2.77	2.81	120
130	2.85	2.90	2.94	2.99	3.03	3.08	3.12	3.17	3.22	3.26	130
140	3.31	3.36	3.41	3.45	3.50	3.55	3.60	3.65	3.70	3.75	140
150	3.80	3.85	3.90	3.95	4.00	4.06	4.11	4.16	4.22	4.27	150
160	4.32	4.38	4.43	4.49	4.54	4.60	4.65	4.71	4.77	4.82	160
170	4.88	4.94	5.00	5.05	5.11	5.17	5.23	5.29	5.35	5.41	170
180	5.47	5.53	5.59	5.66	5.72	5.78	5.84	5.91	5.97	6.03	180
190	6.10	6.16	6.23	6.29	6.36	6.42	6.49	6.55	6.62	6.69	190
200	6.75	6.82	6.89	6.96	7.03	7.10	7.17	7.24	7.31	7.38	200
210	7.45	7.52	7.59	7.66	7.73	7.81	7.88	7.95	8.03	8.10	210
220	8.17	8.25	8.32	8.40	8.47	8.55	8.63	8.70	8.78	8.86	220
230	8.93	9.01	9.09	9.17	9.25	9.33	9.41	9.49	9.57	9.65	230
240	9.73	9.81	9.89	9.97	10.05	10.14	10.22	10.30	10.39	10.47	240
250	10.55										

For steel qualities with intermediate strengths, linear interpolation may be applied to determine the value of ω.

Buckling factor ω for steel of 520 N/mm^2 grade

λ	0	1	2	3	4	5	6	7	8	9	λ
20	1.06	1.06	1.07	1.07	1.08	1.08	1.09	1.09	1.10	1.11	20
30	1.11	1.12	1.12	1.13	1.14	1.15	1.15	1.16	1.17	1.18	30
40	1.19	1.19	1.20	1.21	1.22	1.23	1.24	1.25	1.26	1.27	40
50	1.28	1.30	1.31	1.32	1.33	1.35	1.36	1.37	1.39	1.40	50
60	1.41	1.43	1.44	1.16	1.48	1.49	1.51	1.53	1.54	1.56	60
70	1.58	1.60	1.62	1.64	1.66	1.68	1.70	1.72	1.74	1.77	70
80	1.79	1.81	1.83	1.86	1.88	1.91	1.93	1.95	1.98	2.01	80
90	2.05	2.10	2.14	2.19	2.24	2.29	2.33	2.38	2.43	2.48	90
100	2.53	2.58	2.64	2.69	2.74	2.79	2.85	2.90	2.95	3.01	100
110	3.06	3.12	3.18	3.23	3.29	3.35	3.41	3.47	3.53	3.59	110
120	3.65	3.71	3.77	3.83	3.89	3.96	4.02	4.09	4.15	4.22	120
130	4.28	4.35	4.41	4.48	4.55	4.62	4.69	4.75	4.82	4.89	130
140	4.96	5.04	5.11	5.18	5.25	5.33	5.40	5.47	5.55	5.62	140
150	5.70	5.78	5.85	5.93	6.01	6.09	6.16	6.24	6.32	6.40	150
160	6.48	6.57	6.65	6.73	6.81	6.90	6.98	7.06	7.15	7.23	160
170	7.32	7.41	7.49	7.58	7.67	7.76	7.85	7.94	8.03	8.12	170
180	8.21	8.30	8.39	8.48	8.58	8.67	8.76	8.86	8.95	9.05	180
190	9.14	9.24	9.34	9.44	9.53	9.63	9.73	9.83	9.93	10.03	190
200	10.13	10.23	10.34	10.44	10.54	10.65	10.75	10.85	10.96	11.06	200
210	11.17	11.28	11.38	11.49	11.60	11.71	11.82	11.93	12.04	12.15	210
220	12.26	12.37	12.48	12.60	12.71	12.82	12.94	13.05	13.17	13.28	220
230	13.40	13.52	13.63	13.75	13.87	13.99	14.11	14.23	14.35	14.47	230
240	14.59	14.71	14.83	14.96	15.08	15.20	15.33	15.45	15.58	15.71	240
250	15.83										

For steel qualities with intermediate strengths, linear interpolation may be applied to determine the value of ω.

Plate 5.9. Buckling parameters "ω" (BS5655: Part 9).

5.10.3 *Energy dissipation buffers*

They can be used irrespective of the lifts rated speed υ. Hence in this case the value of S shall be equal to stopping distance in relation to 115% of υ mm/sec.

$$S = \frac{1}{2}\,(\text{Eq.5.85}) = 0.0674\,\upsilon^2 \text{ (in metres)} \tag{5.89}$$

If the speed is monitored at the end of a lifts travel, the stroke may be reduced to 50% for speeds up to 4.0 m/s (minimum stroke 0.42 m) and to $33\frac{1}{3}$% for speeds higher than 4.0 m/s (minimum stroke 0.54 m).

In any case the average retardation calculated must not be more than g_n. The Codes also restrict the retardation of more than, 2.5 g_n shall not last longer than 0.04 second.

The buffer strokes (in metres) for various speeds with buffer types are computed and are given below in the example D.E. 5.10.

D.E. 5.10 EXAMPLE ON STROKES FOR ACCUMULATION AND DISSIPATION TYPES

Determine a typical design stroke for both accumulation and dissipation types. Tabulate results 0.63–10 m/sec speeds.

(a) S (Accumulation type) $= 0.1348\upsilon^2$
$= 0.1348(1.6)^2$
$= 0.345$ m or 345 mm
(shown in the Table below)

(b) S (Dissipation type) $= \frac{1}{2} \times 0.1348\upsilon^2$
$= 0.173$ m or 173 mm
(see Table below).

For other speeds including 50% dissipation and 331/3% dissipation, dissipation full stroke and accumulations.

Speed (m/s)	Accumulation without buffers	Accumulation with buffers	Dissipation full stroke	Dissipation 50% stroke	Dissipation $33\frac{1}{3}$% stroke
0.63	65 mm	65 mm	27 mm	0.42	–
1.00	135 mm	135 mm	67 mm	0.42	–
1.60	–	345 mm	173 mm	0.42	–
2.50	–	–	0.42	0.42	–
3.15	–	–	0.69	0.42	–
4.00	–	–	1.07	0.54	–
5.00	–	–	1.68	–	0.56
6.30	–	–	2.66	–	0.89
10.00	–	–	6.70	–	2.23

5.10.4 *Polyurithane buffers of energy accumulation under reaction force*

The buffer reaction force F_R is expressed as:

$$F_R = Kx^n \ (N) \tag{5.90}$$

where,

K = buffer stiffness (N/mm)
x = buffer compression (mm)

Let
M_{cr} = total mass of the car (kg)
υ_{oi} = car speed at impact occurring instantly
υ_t = car speed at time t.

The principle of energy of conservation is envoked:

$$\int F_R = \int_o^x Kx^n dx = \frac{1}{2}M\left(\upsilon_{oi}^2 - \upsilon_t^2\right) + Mg_n x \tag{5.91}$$

From Equation (5.91) the value of υ_t:

$$\upsilon_t^2 = \upsilon_{oi}^2 - 2g_n\left[\frac{K}{(n+1)Mg_n}x^{n+1} - x\right] \tag{5.92}$$

A trajectory can be drawn easily from Equation (5.92).
Taking differentiation:

$$\frac{d\upsilon_t}{dx} = 0 = -\frac{g_n}{\upsilon}\left[\frac{K}{Mg_n}x_2^n - 1\right] \tag{5.93}$$

$x = x_1$	$F_R = 0$	$\upsilon_t = \upsilon_{oi}$	$\alpha = g_n$
$x = x_2$	$F_R = Mg_n$	$\upsilon_t = \upsilon_{t(\max)}$	$\alpha = 0$
$x = x_3$	$F_R = (n+1)Mg_n$	$\upsilon_t = \upsilon_{oi}$	$\alpha = -ng_n$

x_2 will be a point on trajectory and is computed now as:

$$x_2 = \sqrt[n]{\frac{Mg_n}{K}} \tag{5.94}$$

Looking at a condition when $\upsilon_t = \upsilon_{oi}$, two values of buffer compression x can be obtained while evoking Equation (5.92).

At point 1 when $x = 0$ say $x_1 \quad \Rightarrow \quad x_1 = 0$.

The second term in a bracket = 0, the value of x will be x_3:

$$x_3 = \sqrt[n]{\frac{(n+1)Mg_n}{K}} \tag{5.95}$$

The equation for the retardation or acceleration 'α' can now be written (using the Equation (5.93)) easily:

$$\alpha = -g_n x\left[\frac{Kx^n}{Mg_n} - 1\right] \tag{5.96}$$

The stopping action first period

The car speed decreased to υ_{oi} and leading to zero.

5.11 DESIGN ANALYSIS OF CAR FRAMES

5.11.1 *Introduction*

The car frame is most frequently of a side post construction with guide rails located on two opposite sides. Figure (5.5), shows a traditional side-post car frame. The car frame or car sling is a supporting steel structure for the car. It consists of

(a) cross head beam(s)
(b) stiles which are two vertical car uprights
(c) safety plank channel.

The car frame is bolted, riveted and welded having stiles to the cross head at the top and to the safety plank to the bottom. It is guided on each guide rail by upper and lower guiding members attached to the frame. The car is usually suspended with a suspension device and from the elevator (lift) ropes by means of a hitch plate and shackles. The safety plank forms the base of the uprights and supports car platform, and passengers or other loads resting during the travel. Toe guards are also attached to the car platform and are flushed with hoist-way edges of the sills and spans. The entire width of hoist-way door opening. The end of traveling cables is mounted to the bottom of the platform framing and is also attached to the hangers. A reference is made to various specifications in Section I.

5.11.2 *Design analysis of the car frame*

The frame and its guiding members shall be designed to withstand the forces and moments imposed on them under operational conditions.

5.11.2.1 *Cross-heads*

The stress in the cross-head beam is based on the total load supported by the cross-head beam for the case of the car with its rated load being at rest at the top terminal landing, i.e. the effect of compensating and traveling cables must also be taken into consideration. If the cross-head is considered a simple beam with two pin-jointed ends, the formulae for the stress σ and deflection δ are as follows:

$$\sigma = \frac{N \times g_n \times L}{4Z_{xx}} \quad (\text{N/mm}^2) \tag{5.97}$$

and

$$\delta = \frac{N \times g_n \times L^3}{48E \times I_{xx}} \quad (\text{mm}) \tag{5.98}$$

where,

- N is total load imposed on the cross-head beam (kg),
- L is the span of the beam (mm),
- E is modulus of elasticity of the material of the beam (N/mm^2),
- Z_{xx} is the modulus in bending of the cross-section of the beam, related to the x-x axis (mm^3),
- I_{xx} is moment of inertia of the cross-section of the beam, related to the x-x axis (mm^4).

During normal elevator operation, the stress in the safety plank for the case of the stringers being supported directly on the plank members is based on the sum of 5/8 of the platform mass uniformly distributed, plus concentrated loads due to the tension in the compensating and traveling cables, plus

(i) for passenger elevators: 5/8 of the rated load uniformly distributed
(ii) for freight elevators: the portion of the rated load and its location dependent on the class of loading.

In the case of buffer engagement, account must be taken of the buffer retarding force acting on the safety plank as well as of an appropriate portion of the rated load and platform mass. For passenger elevators this portion should be 5/8 of total values.

The buffer retarding force, acting as a concentrated load, is generally given by the formula:

$$F = (Q + M) \times (g_n + \alpha_{\max}) \tag{5.99}$$

where,

$\alpha_{\max}$ is maximum retardation due to the buffer engagement, lasting for more than 0.04 s (m/s^2).

For oil buffer engagement, the stress σ is:

$$\sigma = \frac{(Q + M)g_n \times d}{2Z_{xx}} \quad (\text{N/mm}^2) \tag{5.100}$$

For stiles under combined tensioned and compression, the value of a critical stress σ_{cr} is given by Equation (5.101):

$$\sigma_{cr} = \frac{N \times g_n}{2A} + \frac{ML}{4H \cdot Z_{xx}} \quad (\text{N/mm}^2) \tag{5.101}$$

where,

A = cross-sectional area of uprights on one side (mm)
M = turning moment
L = free length of an upright
N = loading
H = distance between the centre of upper and lower guide shoes (mm)
Z_{xx} = modulus in bending
e = eccentricity of the load in plane of guide rails

$$M = Q \cdot g_n \cdot e \tag{5.102}$$

For CLASS A Passenger or general freight loading:

$$M = \frac{Qg_nb}{8} \tag{5.103}$$

For CLASS B Loading

$$M = \frac{Qg_nb}{8} \tag{5.104}$$

or

$$M = Qg_n\left[\frac{b}{2} - 1220\right] \tag{5.105}$$

For CLASS C Loading

$$M = \sum \frac{2Qg_nb}{8} \tag{5.106}$$

5.11.2.2 *Distortion of frame parts under loads*

Plate (5.5) shows various forces and moments occurring on the frame.

(1) Under concentrated load $(Q + M)g_n$ acting concentrically

$$\theta = \textit{angle of distortion of the cross-head}$$
$$= -\frac{(Q + M)g_nb^2}{16EI_1} \tag{5.107}$$

(2) If the concentrated load Q is off centre i.e. placed at m and n distance from one end

$$\theta_1 = -\frac{Qg_n n}{6bEI_1}(b^2 - n^2) \tag{5.108}$$

$$\theta_2 = -\frac{Qg_n m \times n(b+m)}{6bEI_1} \tag{5.109}$$

(3) Safety plank under uniform load 'ω' the load is:

$$\omega = \frac{(Q+M)g_n}{b} \tag{5.110}$$

$$\theta_{sp} = \frac{(Q+M)g_n b^2}{24EI_3} \tag{5.111}$$

(4) Two moments M_1 applied at the ends of the cross-head or top of the car:

$$\theta_1 = +\frac{M_1 b}{2EI_1} \tag{5.112}$$

If one end carries M_1

$$\theta_1 = +\frac{M_1 b}{6EI_1}$$

(a) *Under normal operation conditions*
Rated load uniformly distributed on the car floor area.
Inner moments at the ends of the safety plank are M_2.

Equation of Equilibrium
The angles of distortion at say node (1), the inner moment M_1, at (1) of the cross-head and the stile or an upright at (1).

$$\underbrace{-\theta + \theta_1}_{\textit{cross-head}} = -\,\textit{rotation due } M_1 \textit{ of upright at } (1)$$

$$-\,\textit{rotation due to } M_2 \textit{ at node (1) upper end of the upright}$$

$$-\frac{(Q+M)g_n b^2}{16EI_1} + \frac{M_1 L}{3EI_2} = -\frac{M_1 L}{3EI_2} - \frac{M_2 L}{6EI_2} \tag{5.113}$$

Inner moment M_2 involving angles of distortion of plank at bottom and the bottom end of the upright:

$$\underbrace{\theta_{sp}}_{\textit{plank}} - \underbrace{\frac{M_2 b}{2EI_2}}_{\textit{from plank}} = \underbrace{\frac{M_2 b}{2EI_2} + \frac{M_1 L}{6EI_2}}_{\textit{upright}} \tag{5.114}$$

Solving Equations (5.113) and (5.114) for M_1 and M_2, the final values are given as:

$$M_1 = \overline{K}\left[\frac{6LI_2I_3 + 9bI_2^2 - 2LI_1I_2}{\overline{L}}\right] \tag{5.115}$$

$$M_2 = \overline{K}\left[\frac{4LI_2I_3 + 6bI_2^2 - 2LI_1I_3}{\overline{L}}\right] \tag{5.116}$$

R = the horizontal reactions are computed as Equation (5.117):

$$R = \frac{M_1 + M_2}{L} \tag{5.117}$$

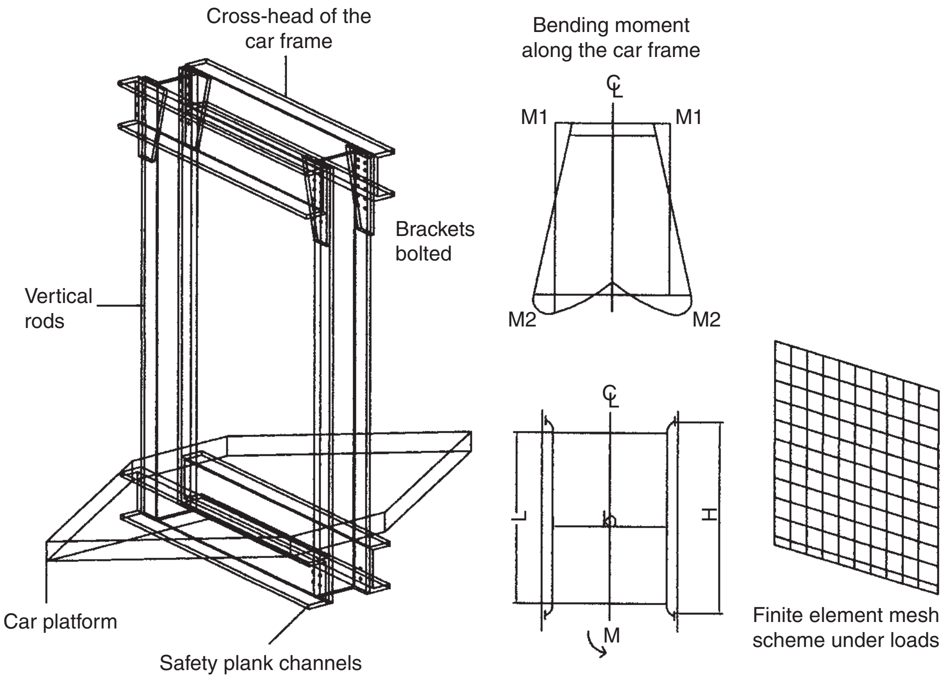

A pictoral view of a car frame.

Plate 5.5. Corner *a* and *c* as sides *ad* and *ab* [or two other sides] must be kept open for loading and unloading.

(b) *Under 'safety gear' Operation*

When the dynamic force due to safety gear operation is considered, the above equations are modified by a coefficient ψ_{SG} which is included in these equations. The value of ψ_{SG} is given as:

$$\psi_{SG} = 1 + \frac{\alpha}{g_n} \tag{5.118}$$

where,

$$\overline{K} = \frac{(Q+M)}{24} g_n b^2;$$

$$\overline{L} = L^2 I_1 I_3 + 2bL(I_1 I_2 + I_2 I_3) + 3b^2 I_2^2 \tag{5.118a}$$

Under safety gear operational condition, the above equations can be re-derived. The final values of M_1 and M_2 are given as:

$$M_1 = 2\psi_{SG}\overline{K}\left[\frac{LI_1I_2}{\overline{L}}\right] \tag{5.119}$$

$$M_2 = 2\psi_{SG}\overline{K}\left[\frac{2LI_1I_2 + 3bI_2^2}{\overline{L}}\right] \tag{5.120}$$

The values $\overline{K}$ and $\overline{L}$ are defined by Equation (5.118a).
The final bending moment of the car frame is given in Plate (5.5).

5.12 DOORS AND DOOR DYNAMICS

5.12.1 *Introduction*

The selection depends upon convenient type of car and landing, kind of elevators and its rated load. In addition the simultaneous transfer of passengers within the door width in shortest opening and closing time can be treated as an efficient door. Normally as stated earlier in Section 1 the normal width of the door shall be at least equal to or greater than 1100 mm. In compliance with EN 81.1 the following conditions are satisfied.

(1) the rated speed does not exceed 0.63 m/sec
(2) the depth of the car is greater then 1.5 m
(3) the edge of the car operating panel is at least 0.4 m from the car entrance.

The conditions for the strength of the door panels vary slightly with different standards. In accordance with EN 81.1 the doors in the locked position shall be subjected to a force of 300N at right angles the panel evenly distributed over an area of 500 mm and must

(a) resist without permanent deformation
(b) resist elastic deformations greater than 15 mm
(c) operate satisfactorily after such a test.

There are many types of car doors. The doors are classified as

(i) swinging doors
(ii) horizontally sliding doors
(iii) vertical sliding doors
(iv) multi-panel doors.

5.13 DOOR DYNAMICS

The EN81 and USA17.1 standards prescribe that the kinetic energy of the power operated lift or elevator car and landing doors must not exceed 10 Joules (EN81) and 9.5 Joules (USA17.1) provided that the reopening exists.

5.13.1 *Kinetic energy of the doors*

The kinetic energy value is reduced to $4.0\,J\{3.4J\}$, if the re-opening device is disabled (eg. During nudging).

Kinetic energy (KE) is given by:

$$KE = \frac{1}{2}Mv_d^2 \tag{5.121}$$

where,

M is the weight of the doors (kg)
v_d^2 is the maximum speed (m/s) that the doors attain.

Table (5.1) gives the maximum speed that the elevator doors are permitted to attain, when closing.

5.13.2 *Door closure force*

The force necessary to prevent a door closing may not exceed 150 N {133 N}. The measurement should be made near the mid point of the door travel.

5.13.3 *Doors closed under continuous control*

When doors are closed by the user continuously pressing a control button, the fastest panel speed may not exceed 0.3 m/s.

Table 5.1. Maximum permitted speed when closing elevator doors.

Total weight (kg)	for 10 J (m/s)	for 4 J (m/s)	for 9.5 J (m/s)	for 3.4 J (m/s)
150	0.37	0.23	0.36	0.21
200	0.32	0.20	0.31	0.18
250	0.28	0.18	0.28	0.17
300	0.26	0.16	0.25	0.15
350	0.24	0.15	0.23	0.14
400	0.22	0.14	0.22	0.13
450	0.21	0.13	0.21	0.12
500	0.20	0.13	0.20	0.12

Note: Do not interpolate for light weight doors, use the formula.

5.13.4 *Door weight*

Where the weight of a door is not known it may be estimated by assuming weight as:

Painted landing doors	35 kg/m^2
Painted car doors	24 kg/m^2
(add 10% if stainless or bronze clad)	
Hangers per door	10 kg
Other hardware (vanes, arms, safe edges, etc.)	5 kg

5.13.5 *Door closing time*

The door closing time for a side closing door is measured from a point 50 mm from the jamb to a point 25 mm from centre.

The door closing time for a centrally closing door is measured from a point 25 mm from the jamb to a point 25 mm from the centre.

D.E. 5.11 EXAMPLE ON SINGLE PANEL SIDE OPENING (SPSO)

Determine the maximum speed of SPSO doors of area 3.0 m^2, use the following data:

Landing door weights	102 kg
Car door weights	70 kg
Hangers weights	20 kg
Other hardware weights	10 kg
Total	202 kg

From the above table (5.1), the maximum door speed for 10 *Joules* for 202 kg total weight is

$$v_d = 0.32\ m/s$$

D.E. 5.12 EXAMPLE ON DOOR CLOSING TIME

The following data for the SPSO Door is as follows, calculate the closing time:

Door width $= 1065$ mm
Weight $= 202$ kg
Time to move $= 1065 - 100 = 965$ mm

will be $= \dfrac{0.965}{0.32} = 3.0$ seconds

Due to acceleration and deceleration at the start and finish of the door close cycle = 1.0 second
Total time = 3.0 + 1.0 = 4.0 seconds.

6

Lift/Elevator travel analysis

6.1 INTRODUCTION

This section gives an abridged methodology as to how to evaluate the elevator travel and the round trip time. The analysis includes up-peak in travel and up-peak handling capacity. A typical example on elevator traffic is given to explain the usage of various formulae.

The Round Trip Time (RTT) in seconds of a single elevator during up-peak traffic is given by:

$$RTT = 2Htv + (S+1)ts + 2N_p tp \tag{6.1}$$

where,

H is the average highest reversal floor
S_{av} is the average number of stops
N_p is the average number of passengers in the car (assuming an 80% occupancy)
tv is the time to transit between two adjacent floors at rated speed (s)
i.e. $tv = df_H/v$

where,

df_H is the average interfloor height (m)
v is the rated speed (m/s)
ts is the time lost at each stop (s)
[i.e. $ts = tf(1) + to + tc - tv = T - tv$]

where:

$tf_H(1)$ is the single floor flight time (s)
to is the door opening time (s)
tc is the door closing time (s)
T is the performance time (s)
tp is the average one away passenger transfer time (s)

The up-peak interval ($UPPINT$) in seconds of a group of (L) cars is given as:

$$UPPINT = RTT/L \tag{6.2}$$

the up-peak handling capacity ($UPPHC$) in persons/5-minutes of a group of (L) cars is given by:

$$UPPHC = \frac{300N_pL}{RTT} = \frac{300N_p}{UPPINT} \tag{6.3}$$

The percentage (% POP) of the total building population (POP) above the main floor terminal floor, that can be served during up-peak is given by:

$$\% POP = \frac{UPPHC}{POP} \times 100 \tag{6.4}$$

Equal interfloor distances and floor populations are assumed.

Values for H and S are normally obtained from a table provided by the manufactures. For example for buildings in the absence of data the following is considered:

(a) 15 floors with 10 persons $H = 13.8$ m; $S_{av} = 6.4$ and $N_p = 8$
(b) 10 floors with 21 persons $H = 9.8$ m; $S_{av} = 8.3$ and $N_p = 16.8$
(c) 5 floors with 13 persons $H = 4.9$ m; $S_{av} = 4.5$ and $N_p = 10.4$

D.E.6.1 EXAMPLE ON ELEVATOR TRAFFIC

Determine *UPPHC* and % *POP* for 21 person car serving 10 floors above the main terminal. Total population above the main floor = 833 persons. Door opening time 2.0 seconds. Door closing time = 2.5 seconds. Peak period = 5 minutes. Transfer time = 1.2 seconds. $H = 9.8$ m; $S_{av} = 8.3$; $N_p = 16.8$.

$$\begin{aligned}
RTT(Eq.6.1) &= 2 \times 9.8 \times \frac{3.3}{1.6} + (8.3 + 1)\left(5.0 + 2.5 + 2.0 - \frac{3.3}{1.6}\right) + 2 \times 16.8 \times 1.2 \\
&= 40.425 + 69.169 + 40.32 = 149.914 \\
\text{Use 5 cars} &= \frac{149.914}{5} = 29.9828 \approx 30\ \textit{seconds} \longleftarrow \textit{UPPINT} \\
UPPHC &= 300 \times \frac{16.8}{30} = 168\ \textit{High} \\
\%\,POP &= 100 \times \frac{168}{833} = 20.17\%\ \textit{High}.
\end{aligned}$$

7

Maximum and minimum stopping distances of car and counterweight (Based on US-A17.1)

7.1 INTRODUCTION

After discussing the design analysis and specifications for lifts/elevators and their components and the methodology of the lift travel, it is essential to give additional information on the car stopping distances. This section gives also the evaluation of the governor tripping speed. A typical explanatory example is given.

It is important to know from simple dynamics that the velocity υ^2 is computed as:

$$\upsilon^2 = 2\alpha S \tag{7.1}$$

The expression used for the governor tripping speed (V_g) shall be based on a retardation:

$$S_{\max} = \frac{V_g^2}{6.87} + 0.26\ (m) \quad \text{for retardation of } 1.0\, g_n \tag{7.2}$$

$$S_{\max} = \frac{V_g^2}{19.63}\ (m) \quad \text{for retardation of } 0.35\, g_n \tag{7.3}$$

where,

V_g = governor tripping speed m/sec
g_n = standard acceleration m/sec^2.

D.E. 7.1 EXAMPLE ON STOPPING DISTANCES FOR LIFTS

Determine the maximum and minimum stopping distances when the governor tripping speeds (m/s) are given below:

V_g (m/s)	0.25	0.5	1.0	2.0	4.0	6.0	8.0	10.0	12.0

Using Equations (7.1) and (7.2) for maximum and minimum stopping distances in metres. The values of V_g are substituted as given in the example.

V_g (m/sec)	0.25	0.50	1.0	2.0	4.0	6.0	8.0	10.0	12.0
$S_{\max}$ (m)	0.27	0.30	0.40	0.84	2.59	5.50	9.56	14.82	21.22
$S_{\min}$ (m)	0.0031	0.0127	0.05	0.20	0.82	1.83	1.73	5.09	7.34

8

Elements of super structures – Finite Element Analysis

8.1 BELT CALCULATIONS

Prior to any belting calculation being carried out it is necessary to establish:

1. the output to be conveyed;
2. the profile of the conveyor(s); and
3. the approximate density of the mineral to be conveyed.

When these data are available it is then possible to determine:

4. the belt width and belt speed;
5. total horsepower required;
6. type of drive unit;
7. tensile strength of belt necessary; and
8. the correct belt type for the installation.

8.1.1 *Belt capacity*

A comprehensive analysis for the belt capacity is given in chapter 4.

When determining the belt width and belt speed the following should be taken into account:

(a) Belt types 10 and 12 will only through and track at the lower throughing angles, i.e. approximately 20;
(b) There is a danger with deep throughing (i.e. 45°) that the stresses produced in the belt carcass at the transition area between the wing and centre idlers will cause premature belt failure;
(c) The size of the roadway or gantry may restrict the choice of belt width;
(d) An increase in belt speed increases the rate of wear of the moving parts and increases the emission of dust at the transfer points.

A length correction factor is generally included, which gives the power required to drive the empty belt and to convey the material only, and is based on the use of ball or roller bearing equipment throughout. The frictional factors expressed may appear to be unnecessarily conservative having regard to the figures derived from laboratory tests but experience has proved their dependability, particularly in view of the effects of dust, water, slimes and other factors that have to be accommodated underground; i.e. tables have been derived from a combination of pit experience as well as mathematics.

The power required to drive the empty belt is derived as follows:

$$\text{Horse power} = \frac{K_x LCWSF}{884 \times E} \tag{8.1}$$

where,

$K_x = 0.03$
L = Length of conveyor in feet (1 ft = 0.3048 m)
C = Coefficient of friction.

8.2 FINITE ELEMENT ANALYSIS

A reference is made to the generalised analysis and computed subroutines given in Appendix I and Appendix III. Here some finite element mesh schemes are given for specific parts of the stress analysis of the travelators. They are listed below.

(a) Mesh scheme for the box for the drive system with gears (Fig. 8.1)
(b) Walking platform for travelators (Fig. 8.2)
  –a typical mesh scheme with and without steps
(c) 3D flange and shear plate moment connection (Fig. 8.3)
(d) 3D flange and seat moment connection (Fig. 8.4)
(e) Finite element mesh schemes for drive system gears and associates parts (Fig. 8.5 to 8.7)
(f) 3D F.E. mesh schemes for the travelators end zone (Fig. 8.8) and the travelator middle zone supported by special fire supports (Fig 8.9)
(g) Finite element mesh scheme for girder supported by columns or strut (Fig. 8.10) carrying travelator platform.

8.2.1 *Finite element analysis of gears and platforms for the travelators*

8.2.1.1 Contact of involute teeth

The involute teeth discussed earlier in case of escalators are now in contact as shown in Plate 8.1 (a-d). The maximum pressure is denoted by P_O. The curvature radii are R_1 and R_2 of the respective teeth at the point of contact. The following input data are considered for the analysis.

DATA:

Number of teeth	38
Normal diametral pitch mm	403.5
Normal pressure angle	20.0
Helix angle at pitch diameter	18.0
Normal circular tooth thickness	
At pitch diameter mm	2.412
No. elements (8 noded isoparametric)	4500/wheel gear
Contact elements	2580 (excluding 280 triangular)
No. total nodes	15500 nodes
No. interactions	15
$b =$ tooth width (mm)	25:4
$E_s =$ GN/m^2 Young's modulus	200
$R =$ radius at tooth contact (mm)	22
$\alpha =$ maximum deformed distance	$= 2\sqrt{\frac{F\left(1 - V^2\right)}{\pi}\frac{R}{E_s}}$
2α	= maximum stretch
$F = F_C/\cos 20°$	$= 600\,\text{kN}$
$H_C =$ element height in contact area	$= 0.85\,\text{mm}$
$D =$ base diameter(mm)	$= 60$
$L =$ (mm)	$= 618.40\,\text{mm}$
Involute ϕ_2	$= 0.29824$
ϕ_2	$= 24.4599°$
$f_y =$ yield stress	$= 460\,\text{N/mm}^2$
$f_{failure} =$ failure stress	$= 673.72\,\text{MN/m}^2$

Plate 8.1 shows the finite element mesh scheme for teeth in contact of the two wheels (Fig. a) and two teeth in contact. The radii R_1 and R_2 and the enlarged mesh scheme are shown in Fig. (b) and (c). the plastic and failure node I given in Fig (d). The procedure for the finite element analysis is given in Appendix I.

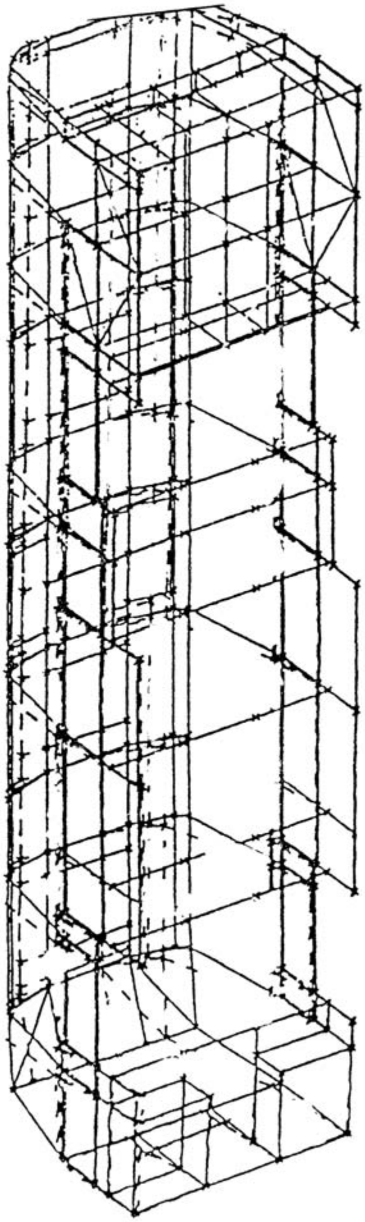

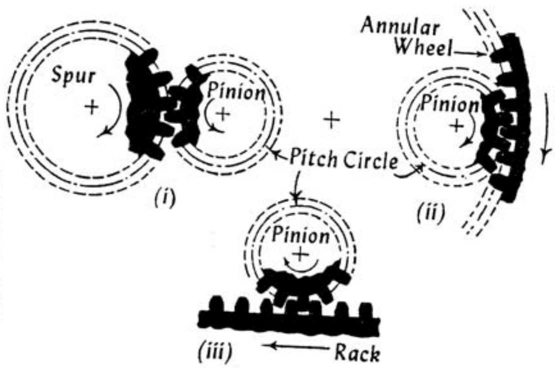

Drive system with annular, pinion and spur wheels.

Figure 8.1. Finite element mesh scheme for a box associated with drive system with gears.

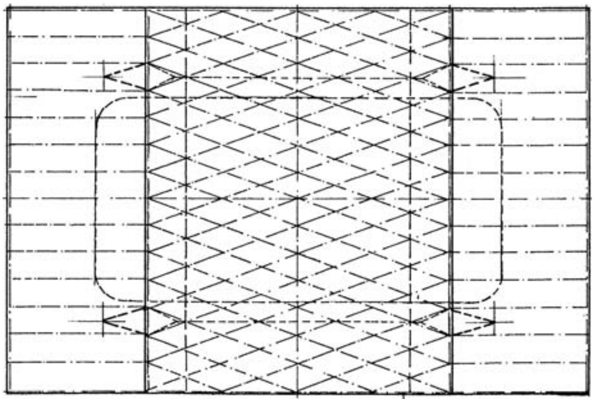

Figure 8.2. Walking platform.

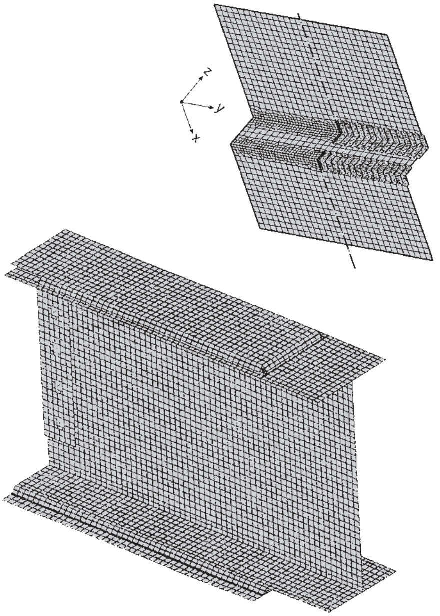

Figure 8.3. Flange and shear plate moment connection – 3D ANSYS mesh scheme.

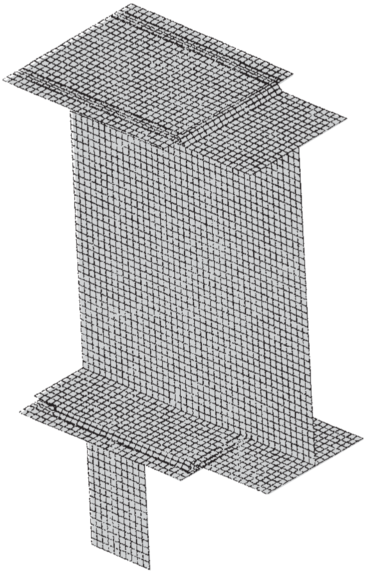

Figure 8.4. Flange and seat moment connection – 3D mesh scheme.

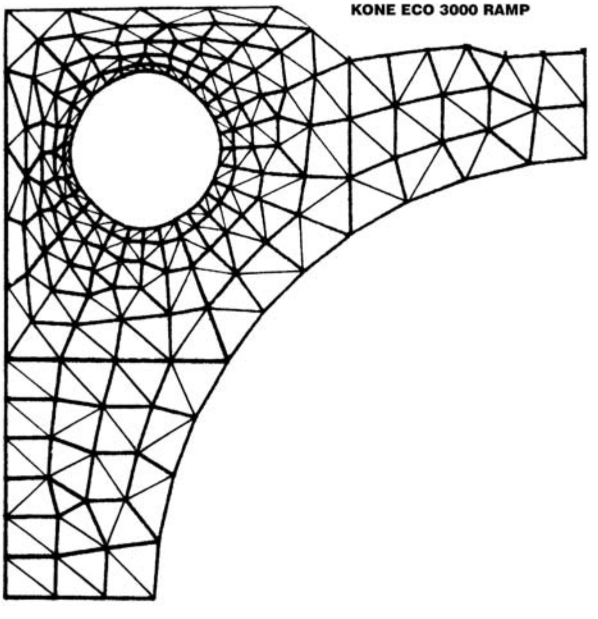

Figure 8.5. Finite element mesh scheme for the analysis chainless drive system with planatory gear.

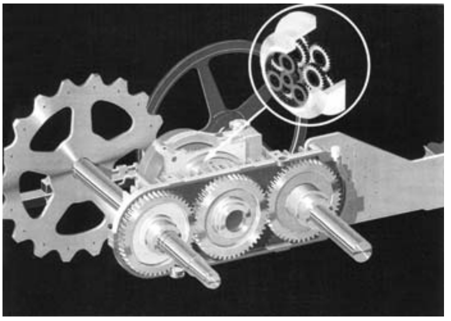

Figure 8.6. Drive system with gears.

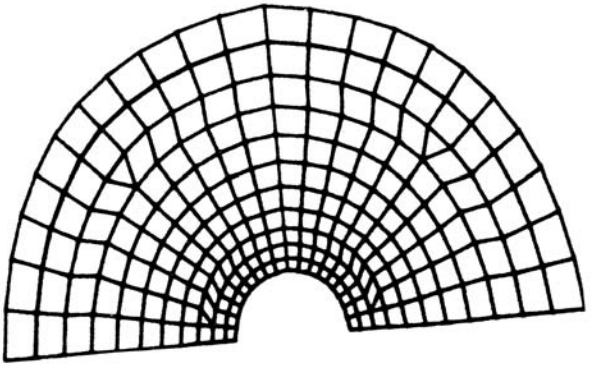

Figure 8.7. Finite element analysis of 1/2 single gear wheel with hole for shaft.

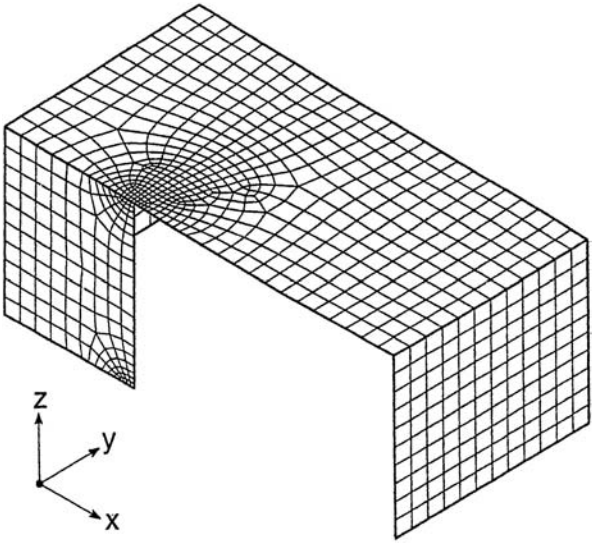

Figure 8.8. 3D F.E. mesh schemes for travelators closed to the end.

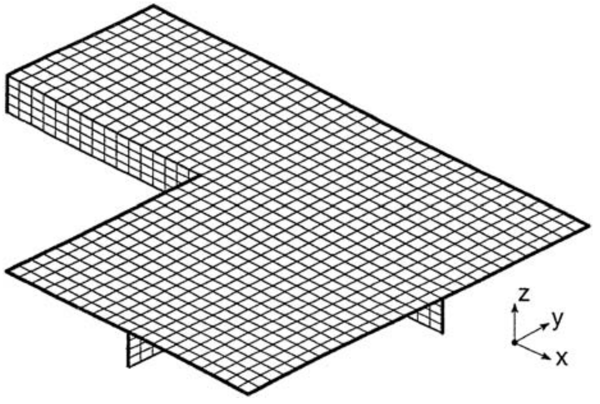

Figure 8.9. F.E. mesh scheme platform supported by fin-edge plates.

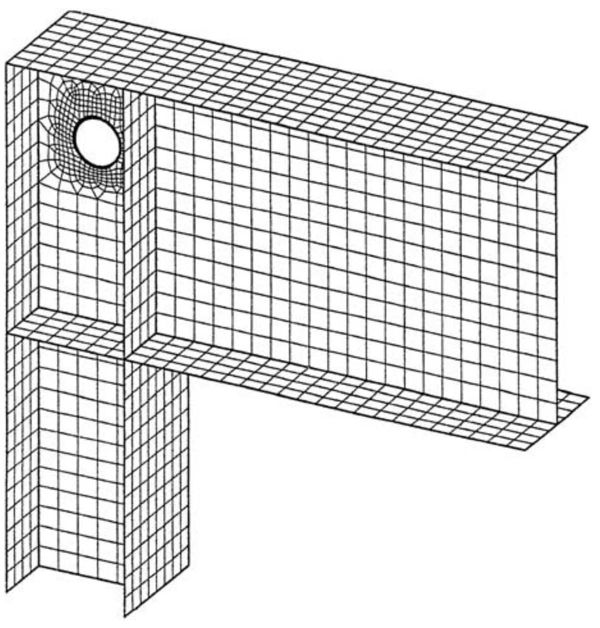

Figure 8.10. Mesh scheme for the girder-column scheme supporting travelators.

8.2.1.2 Step covers and platform

The Schindler passenger conveyor and its data is taken form the Schindler 9300 walkway. A reference is made to section I for technical data. Stainless steel floor cover and etched grid pattern is considered. Using the load of 10 kN/m^2, and the dynamic analysis given in the Appendix III Plate (8.1e) and (8.1f) give track surface waviness and Plate (8.1g) the vertical deformation and stress distribution on the walkways central area connecting the end part of the platform structure. The structure is extremely robust and has a safety factor 5.

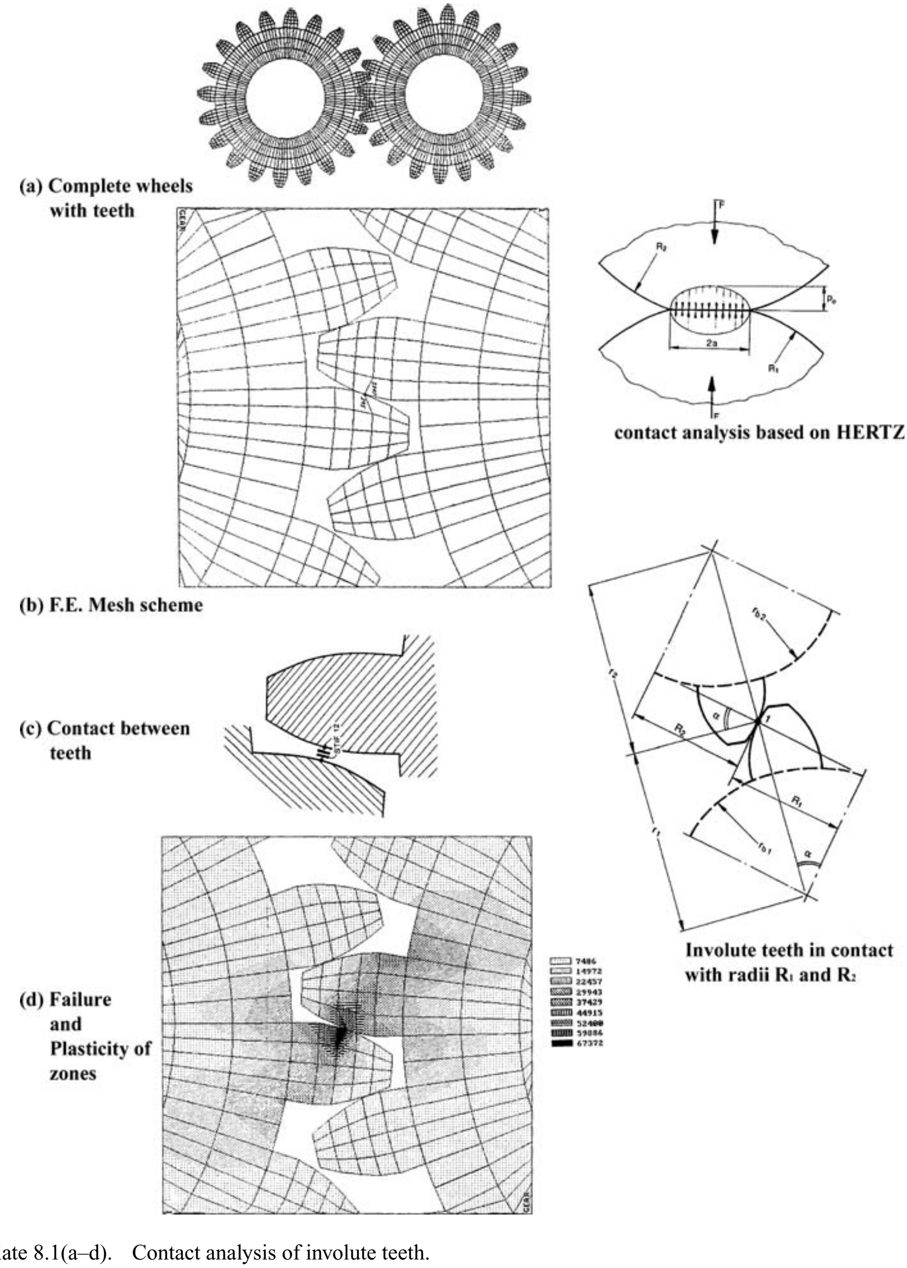

Plate 8.1(a–d). Contact analysis of involute teeth.

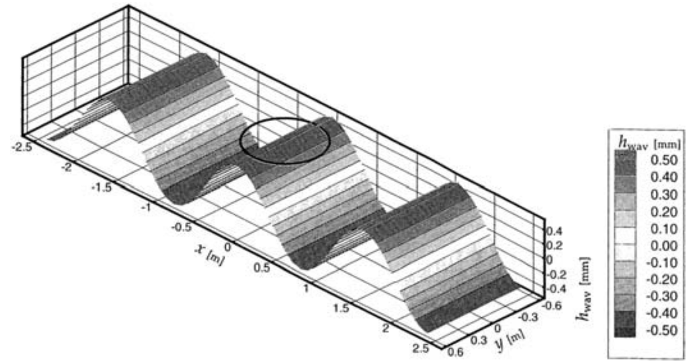

(e) Track surface with waviness (periodic).

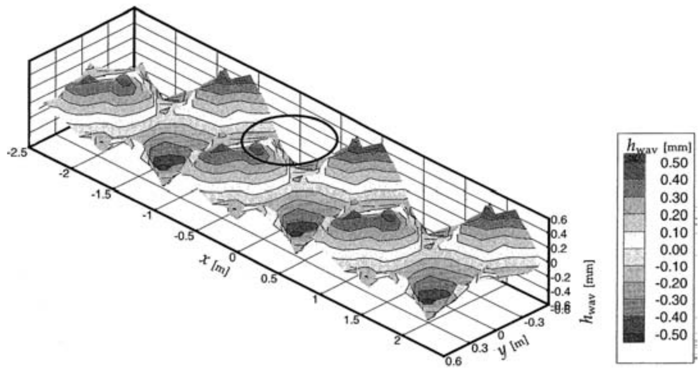

(f) Waviness due to random vibrations.

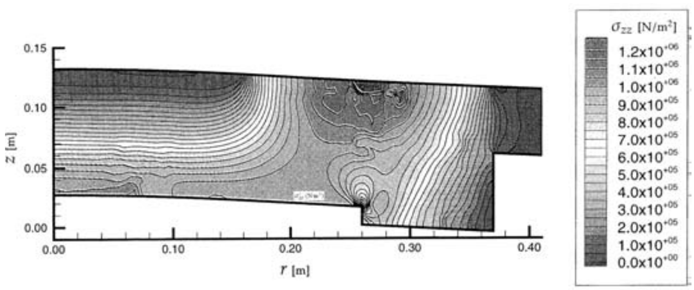

(g) Vertical deformation and stress distribution scale enhanced by 1000. (The maximum deformation = 0.02 mm).

Plate 8.1(e–g). (*Continued*).

8.3 REFERENCES

1. BS EN: 1995 Safety rules for the construction and installation of escalators and passenger conveyors – British Standards, London 1995
2. Timoshenko S.P. Theory of plates and Shells, McCraw-Hill, New York 1959
3. ASME. Inspectors Manual for Escalators and Moving Walks. A17.2.3. American Society of Mechanical Engineers, New York 1998, p.88
4. ASME. Inspectors Manual for Hydraulic Elevators. A17.2.2. American Society of Mechanical Engineers, New York 1997, p.100
5. ASME. Safety Code for Elevators and Escalators. A17.1. American Society of Mechanical Engineers. New York 1996 p.472
6. ASME. Handbook of Safety Code for Elevators and Escalators. A17.1. American Society of Mechanical Engineers. New York 1996 p.624
7. ASME. Check List for Inspection and Test of Electric Elevators. A17.2.1. American Society of Mechanical Engineers. New York, 1994 p.100
8. ASME. Check List for Inspection of Escalators and Inspection of Moving Walks. A17.2.3. American Society of Mechanical Engineers. New York, 1995 p.100
9. ASME. Check List for Inspection of Hydraulic Elevators. A17.2.2. American Society of Mechanical Engineers. New York, 1998, p.100
10. ASME. Safety Code for Existing Elevators and Escalators. A17.3. American Society of Mechanical Engineers. New York, 1996, p.128
11. ASME. Inspectors Manual for Electric Elevators. A17.2.1. American Society of Mechanical Engineers. New York, 1996, p.112
12. HSE. Safety in the Use of Escalators. Health and Safety Executive. Dec. 1983
13. Fenner Power Transmission UK. *Belt drives design manual*. 1994
14. Hamilton, P.: Belt Drives. In Hurst, K. (ed). *Rotary power transmission design*. McGraw Hill. 1994
15. Renold Power Transmission Ltd: *The designer guide*, 22nd edition. 1996
16. BSI. BS 5801: Specification for flat top chains and associated chain wheels for conveyors. BSI. 1979
17. BSI. BS 2969: 1980. Specification for high tensile steel chains (round link) for chain conveyors and coal ploughs. BSI. 1980
18. BSI. BS AU 150b: Specification for automotive V belts and pulleys. 1984
19. BSI. BS 2947: Specification for steel roller chains, types S and C, attachments and chain wheels for agricultural and similar machinery. 1985
20. BSI. BS AU 218: Specification for automotive synchronous belt drives. 1987
21. BSI. BS 4548: Specification for synchronous belt drives for industrial applications. 1987
22. BSI. BS 4116: Conveyor chains, their attachments and associated chain wheels. Specification for chains (metric series). 1992
23. BSI. BS 7615: Specification for motor cycle chains. 1992
    BS 5594: Specification for leaf chain, clevises and sheaves. 1995
24. BSI. BS 228: Specification for short pitch transmission precision roller chains and chain wheels. 1994
25. BSI. BS 3790: Specification for endless wedge belt drives and endless V belt drives. 1995
26. BSI. BS ISO 10823: Guidance on the selection of roller chain drives. 1996
27. ISO. ISO 4348: Flat top chains and associated chain wheels for conveyors. 1978
28. ISO. ISO 610: High tensile steel chains for chain conveyors and coal ploughs. 1980
29. ISO. ISO 487: Steel roller chains, attachments and chain wheels. 1984
30. ISO. ISO 1275: Extended pitch precision roller chains and chain wheels. 1984
31. ISO. ISO 5294: Synchronous belt drives – Pulleys. 1989
32. ISO. ISO 5296-1: Synchronous belt drives – Belts – Part 1: Pitch codes MXL, XL, L, H, XH, and XXH – Metric and Inch dimensions. 1989
33. ISO. ISO 155: Belt drives – Pulleys – Limiting Values for adjustment of centres. 1989
34. ISO. ISO 22: Belt Drives – Flat transmission belts and corresponding pulleys – Dimensions and tolerances. 1991
35. ISO. ISO 4184: Belt drives – Classical and narrow V belts – Lengths and datum system. 1992
36. ISO. ISO 9633: Cycle chains – characteristics and test methods. 1992
37. ISO. ISO 606: Specification for short pitch transmission precision roller chains and chain wheels. 1994
38. ISO. ISO 4183: Belt drives – Classical and narrow V belts – Grooved pulleys (system based on datum width). 1995

39. ISO. ISO 5292: Belt drives – V belts and V ribbed belts – Calculation of power ratings. 1995
40. EN 292-1: 1991 Part 1: *Basic terminology, methodology*. 1991
41. EN 292-1: 1991 Part 1: *Technical principles and specifications*. 1991
42. EN 294: 1992 BSN EN 294: 1992 *Safety of machinery. Safety distances to prevent danger zones being reached by the upper limbs*. 1992
43. EN 60068-2-6: 1995 BS EN 60068-2-6: 1995 *Environmental testing*
    Part 2 *Tests*. *Tests Fc. Vibration (sinusoidal)*. 1995
44. EN 60068-2-27: 1993 BS EN 60068-2-27: 1993 *Environmental testing*
    Part 2 *Tests*
    Test Ea and guidance. Shock 1993
45. EN 60269-1: 1989 BS 88 *Cartridge fuses for voltages up to an including 1000 V a.c. and 1500 V d.c*. 1989
    Part 1: 1988 *Specification of general requirements* 1988
46. EN 60439-1: 1994 BS EN 60439 *Specification for low-voltage switchgear and controlgear assemblies*
    Part 1: 1994 *Specification for type-tested and partially type-tested assemblies*. 1994
47. EN 60529: 1991 BS EN 60529: 1992 *Specification for degrees of protection provided by enclosures (IP code)*. 1991
48. EN 60742: 1989 BS 3535 *Isolating transformers and safety isolating transformers*.
    Part 1: *General requirements*. 1990
    BS EN 60947 *Specification for low-voltage switchgear and controlgear*. 1989
49. EN 60947-4-1: 1992 Part 4 *Contractors and motor-starters*
    Section 1: *Electromechanical control circuit devices*. 1992
50. EN 60947-5-1 Part 5 *Control circuit devices and switching elements*
    Section 1: *Electromechanical control circuit devices*. 1992
51. IEC 249-2 BS EN 60249 *Base materials for printed circuits*
    Part 2 *Specifications*
52. IEC 326-1: 1994 BS 6221 *Printed wiring boards*. 1994
    Part 1: 1990 *Guide for the specification writer*. 1990
53. IEC 747-5: 1992 BS 6493 *Semiconductor devices*. 1992
    Part 1 *Discrete devices*
    Section 1.5: *Recommendations for optoelectronic devices*. 1992
54. OTIS. Travelators. OTIS 606 NCT. 2002
55. Schindler. The reliable moving walks. Schindler 9500. 2002
56. Schindler 9500-10/15 – The reliable moving walk for the shopping centres. 2002
57. Schindler 9500-35 – Minimum installation space, maximum safety. 2002
58. Schindler 9500-45 – The high performance moving walk for long distance. 2002
59. Schindler 9500-55 – Rubber-belt passenger conveyors for comfort and safety. 2002
60. OTIS escalators 30. OTIS 506 NCE. 2002
61. KONE The technically superior ramp. ECO 3000(TM) RAMP. 2002
62. Fujitec High speed elevators. 2002
63. Fujitec. Escalator and Autowalk. GS 5000. 2002
64. Roberts, J.A. Spring design and calculations. 10th edition. The institution of mechanical engineers, London. 1960
65. Gobel, E.F. and Brichta, A.M. Rubber spring design. Newnes-Butterworth. 1974
66. Strakosch, G.R. Vertical transportation: Elevators and escalators. Second edition. John Wiley and Sons. New York. 1983
67. Annett, F.A. Electric elevators. McGraw Hill. New York. 1960
68. Adler, R.R. Vertical transportation. American Elsevier Publishing Company. New York. 1970
69. Barney, G.C. Dos Santos, S.M. Lift traffic analysis, design and control. Peter Pegrinus Ltd U.K. 1970
70. Lindley, P.B. Engineering Design with natural rubber. NRPRA. 1970
71. Morgan, D.J. Vertical Transportation In Metrostations. Technical Note.
    Proc. I. Mech. E. 1999. Vol. 213, Part F. p63–67
72. *Jubilee Line Extension-Escalator Type Selection*, Document
    GEN/SEM/ESC/RP002, London Underground Limited, September 1991
73. *Jubilee Line Extension-Particular Specification*, Working Document,
    GEN/SEM/ESC/SP/004, London Underground Limited, November 1993
74. *North East Line-Design Criteria and Performance Specification*, Land Transport Authority, January 1997

75. Butler, J.S. Lifts and escalators. Imperial College, London December 1968
76. Burney, G.C. Remote Monitoring of Lifts, Escalators and passenger conveyors. International Association of elevator Engineers. London. March 1990
77. ASTM: *Standard specifications for heat-treated flat glass*. C1048-97b. ASTM 1007
78. Glass and Glazing Federation: *Glazing Manual*. 1991
79. Rice, P. and Dutton, H.: *Structural glass*, 2nd edition. E & FN Spon. 1995
80. Roark, R.J. and Young, W.C.: *Formulas for stress and strain.* McGraw-Hill, 6th edition. 1989
81. Ryan, P.A., Otlet, M. and Ogden, R.G.: *Steel supported glazing systems.* Ascot: SCI Publication 193. 1998
82. So, A.K.W. and Chan, S.L.: 'Nonlinear finite element analysis of glass panels'. *Engineering structures* 18(8). 1996
83. Smith, A.D.: 'The analysis design and testing of an asymmetric bolted glass roof panel'. *Proceedings of the Sixth International Conference on Architectural and Automotive Glass*, Tampere, Finland, 13–16 June 1999
84. Timoshenko, S.P. and Woinowski-Krieger, S. (1959): *Theory of plates and shells*, McGraw-Hill
85. Abramowitz, M., and I.A. Stegun, eds. *Handbook of Mathematical Functions*, National Bureau of Standards, Washington, D.C. 1965
86. ANSYS *User's Manual*. Swanson Analysis Systems, Houston, PA. 1989
87. Argyris, J.H. *Energy Theorems and Structural Analysis*, Collection of papers published in Aircraft Engineering. 1954 and 1955
88. Argyris, J.H., and S. Kelsey. *Energy Theorems and Structural Analysis*, Butterworths, London. 1960
89. Bathe, K.J. *Finite Element Procedures in Engineering Analysis*, Prentice-Hall, Inc., Englewood Clifts, NJ. 1982
90. Bathe, K.J. and E.L. Wilson. *Numerical Methods in Finite Element Analysis*, Prentice Hall, Englewood Clifts, NJ. 1976
91. Biezeno, C.B., and R. Grammel. *Engineering Dynamics*, Blackie and Son, London (translated from German, *Technische Dynamik*, Springer–Verlag, Berlin, 1939).
92. Chandrupatla, T.R. and A.D. Belegundu. *Introduction to Finite Elements in Engineering*, Prentice Hall, Englewood Clifts, NJ. 1991
93. ABT-West. *Resultaten Beoordeling Proefbalk Oranjesluizen. Technical report*, Adviesbureau voor Bouwtechniek B.V. (1991). In dutch.
94. XIAOLAN AI and HERBERT S. CHENG. A transient EHL analysis for line contacts with measured surface roughness using multigrid technique. *Journal of Tribology*, 116:549–558. 1994
95. XIAOLAN AI, HERBERT S. CHENG, DONGYUN HUA, K. MOTEKI, and S. AOYAMA. A finite element analysis of dynamically loaded journal bearings in mixed lubrication. *Tribology Transactions*, 41(3): 273–281. 1998
96. M.H. ALIABADI and C. ALESSANDRI, editors. *Contact Mechanics II: Computational Techniques.* Computational Mechanics Publications, Southampton. 1995
97. M.H. ALLIABADI and C.A. BREBBIA, editors. *Contact Mechanics: Computational Techniques.* Computational Mechanics Publications, Southampton. 1993
98. T.S. BARRETT, G.W. STACHOWIAK, and A.W. BATCHELOR. Effect of roughness and sliding speed on the wear and friction of ultra-high molecular weight polythene. Wear, 153:331–350(1995)
99. A. VAN BEEK. *Analysis of Rubber Supported Hydrostatic Bearing systems with Elastic Bearing Surfaces*. Ph.D. thesis, University of Technology Delft (1995)
100. A. VAN BEEK and A. SEGAL. Numerical solution for tilted hydrostatic multi-pad thrust bearings of finite length. *Tribology International*, 30(1):41–46. 1997a
101. BHARAT BHUSAN. Analysis of the real area of contact between a polymeric magnetic medium and a rigid surface. *Journal of Tribology*, 106:26–34. 1984
102. ABDALLAH A. ELSHARKAWY and LOFTI H. GUEDOUAR. An inverse analysis for steady-state elastohydrodynamic lubrication of one-layered journal bearings. *Journal of Tribology*, 123:524–533. 2001
103. EDWIN GELINCK. *Mixed Lubrication of Line Contacts.* Ph.D. thesis, Twente University. 1999
104. A.N. GENT, R.L. HENRY, and M.L. ROXBURY. Interfacial stresses for bonded rubber blocks in compression and shear. *Journal of Applied Mechanics*, pages 855–859. 1974
105. A.N. GENT and P.B. LINDLEY. The compression of bonded rubber blocks. *Proc. Instn. Mech. Engrs.*, 173(3):111–117. 1959
106. I.G. GORYACHEVA. *Contact Mechanics in Tribology*. Kluwer Academic, Dordrecht. 1998

107. C.J. HOOKE and C.H. VENNER. Surface roughness attenuation in line and point contacts. *Proc. Instn. Mech. Engrs.*, 122:1–9. 2000
108. YUAN-ZHONG HU and DONG ZHU. A full numerical solution to the mixed lubrication in point contacts. *Journal of Tribology*, 122:1–9. 2000
109. T.J.R. HUGHES and T.E TEZDUYAR. Finite elements based upon mindlin plate theory with particular references to the four-node bilinear isoparametric element. *Journal of Applied Mechanics*, 48:587–596. 1981
110. K.L. JOHNSON. *Contact Mechanics.* Cambridge University Press. 1985. ISBN 0-521-25576-7
111. K.L. JOHNSON, J.A. GREENWOOD, and S.Y. POON. A simple theory of asperity contact in elastohydrodynamic lubrication. *Wear*, 19:91–108. 1972
112. J.J. KALKER. *Three-Dimensional Elastic Bodies in Rolling Contact.* Kluwer Academic Publishers. 1990. ISBN 0-7923-0712-7
113. P.B. LINDLEY. Plane strain rotation moduli for soft elastic blocks. *Journal of Strain Analysis for Engineering Design,* 14(1):17–22. 1979b
114. GENG LIU, QIAN WANG, and CHIH LIN. A survey of contact models for simulating the contact between rough surfaces. *Tribology Transactions*, 42(3):581–591. 1999
115. ZHIQIANG LIU, ANNE NEVILLE, and R.L. REUBEN. A numerical calculation of the contact area and pressure of real surfaces in sliding wear. *Journal of Tribology*, 123:27–35. 2001
116. A.A. LUBRECHT. *The Numerical Solution of the Elastohydrodynamically Lubricated Line and Point Contact Problem using Multigrid Techniques*. Ph.D. thesis, University of Technology Twente. 1987
117. WEI PEBG and BHARAT BHUSAN. Sliding contact analysis of layered elastic/plastic solids with rough surfaces. *Journal of Tribology*, 124:46–61. 2002
118. A. SEGAL. SERPAN *Standard Problems. Technical report*, Ingenieursbureau SEPRA, Leidschendam. 1993a
119. A. SEGAL. SERPAN *Users Manual. Technical report*, Ingenieursbureau SEPRA, Leidschendam. 1993b
120. M.H. SHARIFF. An approximate analysis of infinitesimal deformations of bonded elastic mounts. *Journal of Strain Analysis*, 23(3):115–120. 1988
121. M.H.B.M. SHARIFF. An analysis of non-linear deformation of bonded rubber blocks. *Journal of Mechanical Engineering Science*, 203:113–119. 1989
122. M. VISSCHER. *The Measurement of the Film Thickness and the Roughness Deformation of Lubricated Contacts.* Ph.D. thesis, University of Technology Eindhoven. 1992
123. W. YAN and K. KOMVOPOULOS. Contact analysis of elastic-plastic fractal surfaces. *J. of Appl. Physics*, 84:3617–3624. 1998
124. X. ZHAI and L. CHANG. An engineering approach to deterministic modelling of mixed-film contacts. *Tribology Transactions*, 41(3):327–334. 1998
125. YATAO ZHANG. Linear deformation of a journal bearing and its relationship to hydrodynamic pressure. *Wear*, 115:41–52. 1987
126. YONGWU ZHAO, DAVID M. MAIETTA, and L. CHANG. An asperity microcontact model incorporating the transition from elastic deformation to fully plastic flow. *Journal of Tribology*, 122:86–93. 2000
127. ZHI-HUA ZHONG. *Finite Element Procedures for Contact-Impact Problems.* Oxford University Press. 1993. ISBN 0-19-856383-3

Section III

Travelators and Moving Walkways – Analysis for Structural Elements

9

General data on travelators/walkways/autowalks: fire analysis of their components

9.1 GENERAL INTRODUCTION

Various structural/mechanical elements are integrated in the principal establishment of escalators and travelators. Chapter 2 gives details of four different manufacturers of these facilities. This section deals with static and dynamic behaviour of these facilities. Only important elements have been described, assessed and analysed. Again credits are given to the following manufacturers for their individual achievements in a very competitive market.

(a) Schindler 9500 – Horizontal moving walk type 35, 40 and 45
(b) Schindler 9500 – Rubber belt passenger conveyor type 55
(c) Fujitec GS 8000 – Escalator and autowalk
(d) Kone ECO3000 – Escalator types 30 and 35
(e) OTIS – Escalators/travelators 660.

9.2 RUBBER BELT PASSENGER CONVEYOR TYPE 55 – SCHINDLER 9500

Plate 9.1 gives a skeleton picture of schindler 9500 in operation. Below the floor cover tension device is located on one side with guide drum. A continuous rubber belt over the rollers passes over guide drums on both sides. The drive unit is located near the driving drum with the guide drum. On top of the rollers and under the floor of the rubber tread are provided transverse steel cord and longitudinal reinforcement. Skert guard is provided for the human traffic. Miconic F, the brain of Schindler 9500, is equipped with intelligent communication capability and therefore can transmit and receive information and commands over a local network and can be controlled through central building system such as lobby vision servitel telemonitoring. They follow the safety codes including EN115/ANSI. It has an exceptionally shallow pit of only 315 mm. Table 9.1 gives specifications for this type of passenger walkway. Generally it reaches 100 m length in various units.

Typical walkways with driving units and drums together with structural details are shown in Plates 9.2 and 9.3 respectively.

9.3 FUJITEC GS 8000 SERIES AUTOWALK

The basic specifications are given in Table 9.1 serves passenger with its exceptional smoothness. The basic specification are for models 1000 and 1200 series. They can be horizontal (0) and inclined types for 10 and 12 angles. The entire design and its specifications are based on EN 115. Plate 9.4 indicates various dimensions of the Autowalks and they are reproduced with the permission of Fujitec London office.

Standard safety devices, which are:

1. H and rail safety guard.
2. Emergency stop button.

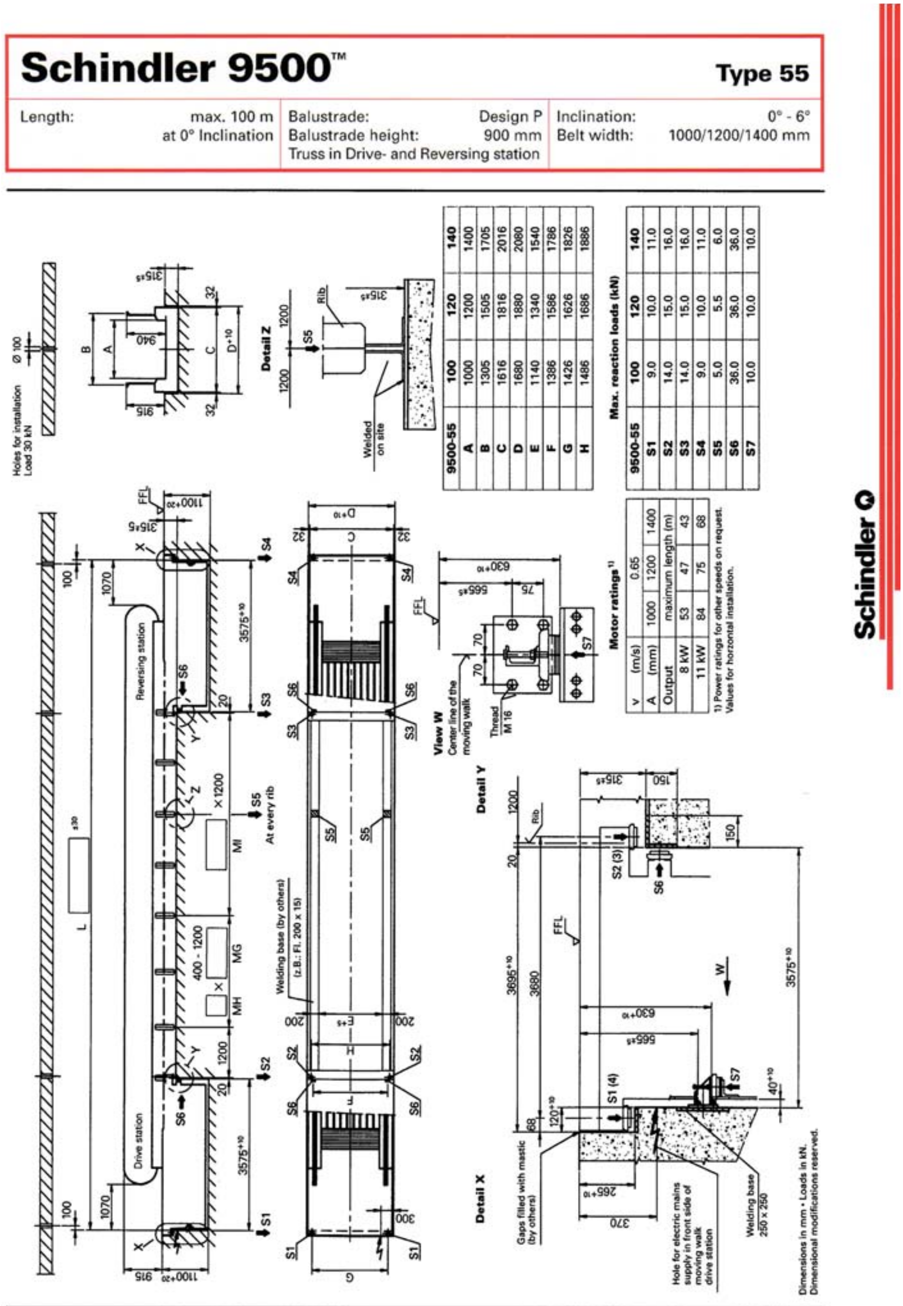

Plate 9.1. Schindler 9500 Type 55 – structural details.

Table 9.1. Passenger conveyor data.

Finish			
Balustrade	(i) Clear or coloured tempered safety glass 10 mm, with/without light (ii) Stainless steel, without lighting		
Balustrade profile	Stainless steel, finish 240		
Skirtings	Stainless steel, finish 240		
Comb	Plastic, yellow		
Floor plate	Rigid aluminium sections, black anodised		
Handrail	Black or coloured		
Specification			
Model type	**100**	**120**	**140**
Belt width A	1000 mm	1200 mm	1400 mm
Balustrade width B	1305 mm	1505 mm	1705 mm
Pit width D	1680 mm	1880 mm	2080 mm
Speed	Standard: 0.65 m/s optional: 0.5, 0.6, 0.75 m/s		
Inclination	0–6		
Power supply	According to local requirements		
Controller	Micronic F microprocessor control		
Key switches	At both ends		
Stop button	At both ends		
Location	Indoor, or outdoor covered		

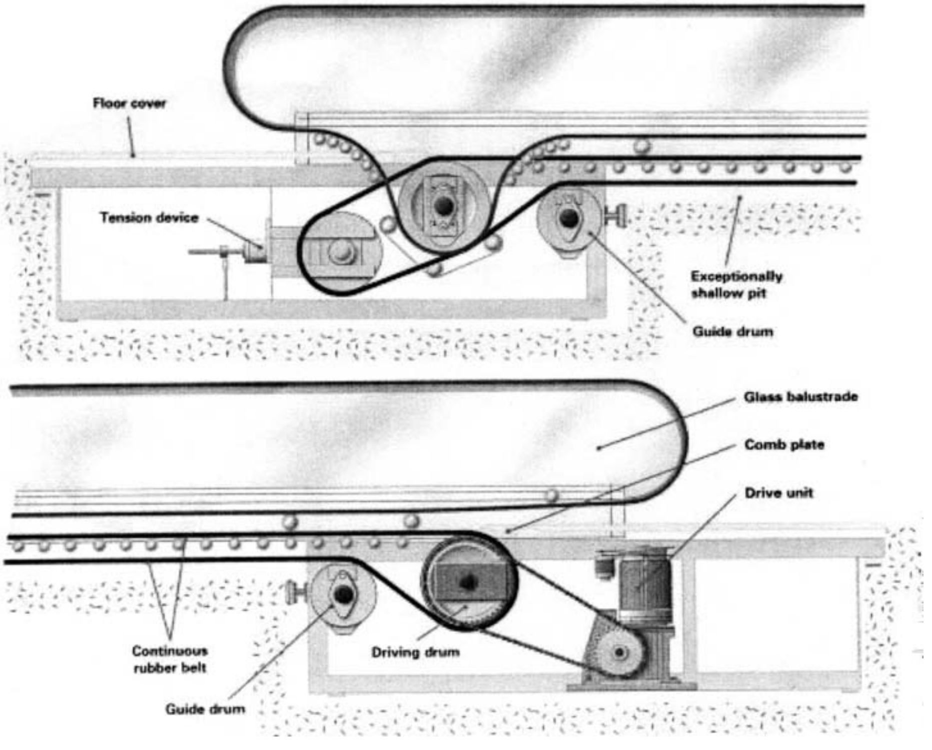

Plate 9.2. Walkways with driving units and drums using continuous rubber belt.

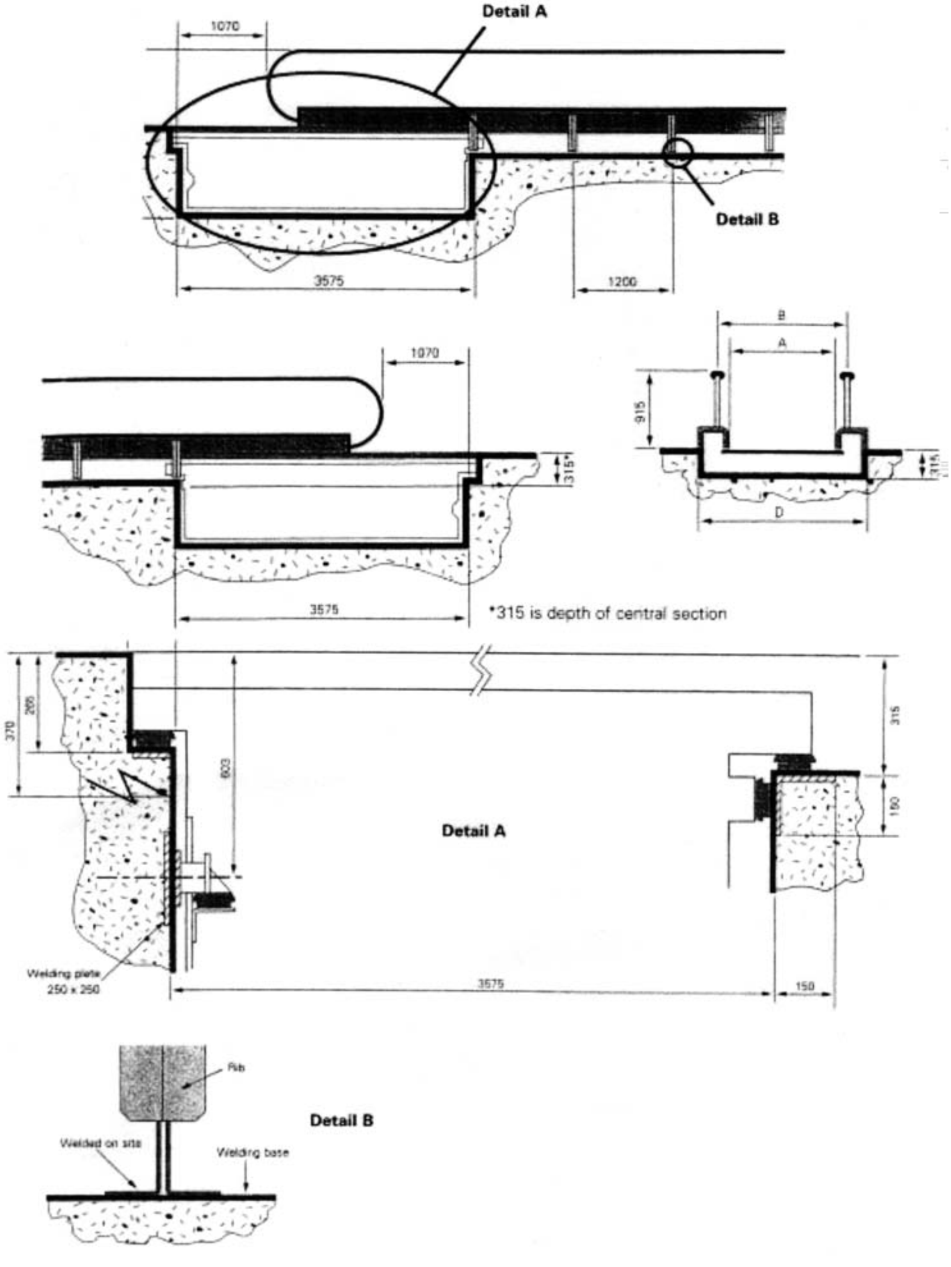

Plate 9.3. Typical structural details.

Layout of Autowalk Horizontal Type

(Interior Panel : Frame or Panel Type)

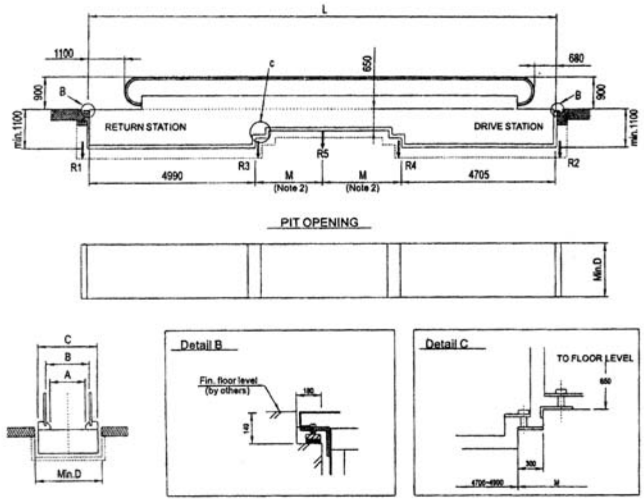

A	800	1000
B	1110	1310
C	1400	1600
D	1460	1660

Notes :
1) The autowalk corresponds to European standard EN-115.
2) MAX. M is 9000mm.

Reactions (KN)

A	800	1000
R1	28	31
R2	32	36
R3	25+M/0.41	28+M/0.36
R4	26+M/0.38	29+M/0.34
R5	M/0.18	M/0.16

Note : M is in meters.

Layout of Autowalk Inclined Type

(Interior Panel : Frame or Panel Type)

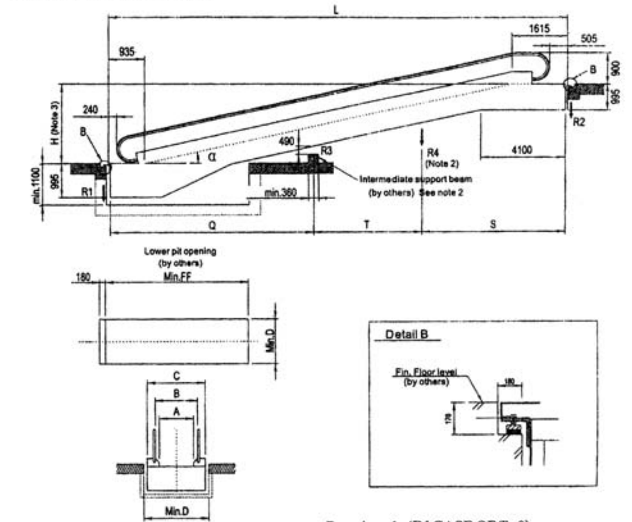

A	800	1000
B	1110	1310
C	1400	1600
D	1460	1660
F	15000	14000
G	30000	28000

α	L	FF
10°	(H+17)×5.6713+2550	4600
12°	(H−17)×4.7046+2550	4000

Notes :
1) The autowalk corresponds to European standard EN-115.
2) If L>F, L≤G, one intermediate support shall be required.
If L>G, two intermediate support shall be required.
3) MAX. H is 6000mm.

Reactions 1 (IN CASE OF T=0)

A	800	1000
R1	3.9Q+4.5	4.5Q+5
R2	3.9S+9.5	4.5S+11
R3	5.07L	5.85L

Note : L,Q,S are in meters.

Reactions 2 (IN CASE OF T≠0)

A	800	1000
R1	3.9Q+4.5	4.5Q+5
R2	3.9S+9.5	4.5S+11
R3	5.07 (Q+T)	5.85 (Q+T)
R4	5.07 (S+T)	5.85 (S+T)

Note : L,Q,S,T are in meters.

Plate 9.4. Data on autowalk Fujitech inc., Japan.

3. Skirt guard obstruction safety device.
4. Broken drive chain safety device.
5. Broken step (pallet) chain safety device.
6. Brake.
7. Demarcation line.
8. Reversal protection device.
9. Governor.
10. Comb safety device.
11. Step (pallet) sag safety device.
12. Auxiliary braise.
13. Phase failure (phase reversal) protection.
14. Step upthrust safety device.

The optional safety devices are mentioned which are:

15. Skirt guards.
16. Fire shutter inter located device.
17. Broken hand rail safety device.
18. Hand rail safety delay sensing device.
19. Tandem operation interlock.
20. Dress guard.

9.4 FIRE AND ESCALATORS/TRAVELATORS

9.4.1 *Introduction*

A reference is made to bibliography (1-250) relevant to this section related to fire. Fire is the primary cause of loss of life and property throughout the world. During the past two decades fire has damaged hundreds of thousands of structures. Significant advances have been made in controlling or mitigating the effects of fire. Various methods have been developed to protect buildings. New materials have been developed or invented. A considerable time is spent by various researchers on the development of mathematical models to simulate the behaviour of structural members in fire. This is possible only if one uses numerical and computer techniques. A large number of computer programs that calculate the fire resistance of structural members now exist. The input data for these computer programs require, apart from loading and fire density, thermal and mechanical properties of various materials at elevated temperatures. In addition, the expected severity of building fires and temperature time relation have also been developed. Most of these properties have been codified. The closet measures related to building design are probably those for the confinement of a fire. These measures include fire barriers capable of delaying or preventing spread of fire, dimensions and locations of buildings. All these measures are directly related to the detailed knowledge of the mechanics and severity of fire. It is, therefore, essential to outline some areas outside the domain of a structural engineer which he or she should be aware of. Some of these are described below:

a) Mechanics of fluids and building aerodynamics applicable to fire engineering.
b) Conduction of heat in solids.
c) Convection and radiation heat transfer.
d) Thermochemistry.
e) Chemical equilibrium and thermal decomposition.
f) Fire dynamics.
    i) Flame height and fire plumes.
    ii) Air entrainment into buoyant jet flames.
    iii) Ceiling jet flows, vent flows and natural convention wall flows.
    iv) Combustion conditions, and smouldering combustion.

v) Flammability limits and flaming ignition of solids.
vi) Smoke production, smoke and heat venting.

g) Burning rates and calorimetry.
h) Compartment fire modelling and fire models for enclosures.
i) Stochastic models for fire growth.
j) Explosion protection.
k) Detection systems, automatic sprinkler systems.
l) Foam system and foam agents.

Within the non-structural analysis, structural analysts must be aware of hazard calculations, risk analysis and probability methods.

The main concern of the structural engineer is the properties of the various materials involved and the analytical tools available for the design of structural elements in fire. They are given later on in this text under various sections.

No matter how many precautions are taken to improve the fire safety design of buildings, they will not be complete without sufficient availability of training in professional education and practice. The main objective is to prepare sufficient manuals of awareness and to transfer knowledge of fire safety of buildings to the building design practitioners by way of courses and seminars at various institutions. Architects and engineers must place importance on fire safety provisions and allow funds for training facilities.

9.4.2 *Loading and restraints*

The load-bearing structures must be subjected to the characteristic dead load G_k and the characteristic imposed load Q_k having the same values as for normal design. The partial safety factors for dead and imposed loads according to BS8110 are 1.4 and 1.6 respectively. In case of fire they are 1.05 for dead load and 1.0 for composed load. In major analysis, it is essential to impose temperature load due to fire, where dynamic analysis is performed, the fire load will be treated as an accidental overload. The American Society of Civil Engineers' Standard ASCE7-93 is not explicit about such a load, as fire is not treated as a permanent load. The best combination is based on the total of the combined effects multiplied by a factor P_F:

$$P_F(L + L_r + {}^*T) + D \tag{9.1}$$

where
$P_F = 0.75$ or 0.66
${}^*T =$ forces due to temperature changes etc.
$L =$ live loads
$L_r =$ roof loads
$D =$ dead loads.

The other indication is to include a factored ${}^*T$, i.e. $1.2{}^*T$ in the above assessment of combined loads. The best combination will then be:

$$1.2D + 1.6L + 0.5L_r + 1.2{}^*T \tag{9.2}$$

where thermal properties of the structural materials known, an approximate relationship has been by Council of Tall Buildings as

$$L = t_f\sqrt{A_W A_T} \tag{9.3}$$

where
$L =$ total weight of fire load in kilograms
$t_f =$ fire resistance in minutes
$A_W =$ windowed area in square metre
$A_T =$ surface area of the enclosed walls and ceiling of the compartment or room containing the fire in square metres.

Generally the fire grading of buildings has been directly related to fire load per unit floor area. Fire loads for domestic, office and hospital buildings are considered as low, for shops and department stores as medium and for storage buildings as high. For modern buildings, based on recent surveys, an average of 25 kg/m^2 (5.75 lbf/ft^2) is used. The logical conclusion would be to keep full dead weight and reduced live load due to occupancy and its reduction in level and full load of fire:

$$(P_F L + L_r + F_L) + 1.2D \tag{9.4}$$

where
F_L = fire load.

The BSI (British Standard Institute) in their draft code 96/540837 indicate that the fire load is influenced by duration and severity of fire and the fire load density is related to a number of different types of occupancy. The effective fire load density is expressed in MJ/m^2 of the floor area as discussed above in other cases. It is suggested that it can also be expressed in terms of equivalent weight of wood as a function of floor area. Several methods may be used to establish the effective fire loads in a room or a compartment:

a) Direct measurement/assessment
b) Static survey
c) Use of characteristic fire load density.

(a) Direct measurement/assessment

Where the fire loading in the direct measurement is unlikely to change over the design life of the building, the fire load density may be estimated from a knowledge of the weight and calorific values of the contents.

The following expressions are adopted:

$$q_{ki} = \frac{\sum m_c H_c}{A_f} \tag{9.5}$$

where
q_{ki} = fire load density of the compartment (MJ/m^2)
m_c = total weights of each combustible material in the compartment (kg)
H_c = calorific value of each combustible material (MJ/kg)
A_f = total internal floor area of the compartment (m^2)

In the case that wet damped materials are present, the effective calorific value H_c is modified by:

$$H_c = H_u(1 - 0.01M) - 0.025M \tag{9.6}$$

where
H_c = effective calorific value of the wet material (MJ/m^2)
H_u = calorific value of the dry material (MJ/m^2)
M = moisture content (in % by dry weight).

Table 9.2 gives calorific values of typical materials.

(b) Statistical survey

A statistical survey is needed for the characteristic fire load density of similar buildings in question. The following points are recommended:
a) a minimum of five buildings
b) buildings investigated should have comparable use and similar size and contents
c) the buildings should be located in the same country in regions of similar socio-economic conditions.

(c) Characteristic fire loads

Recommended values for characteristic fire load densities in various occupancy types are determined from data collected in European countries. They are given in Table 9.3. For the deterministic study it is recommended that the 80% fractile be taken as the characteristic value for design purposes. If only the average value is available, the 80% fractile may be estimated by $1.5q_{ki}$.

Table 9.2. Calorific values of typical materials.

Metal	Properties at 20°C				Thermal conductivity k, W/m·°C									
	ρ, kg/m^3	c_ρ, kJ/ kg·°C	k, W/ m·°C	α, m^2/s $\times 10^5$	−100°C −148°F	0°C 32°F	100°C 212°F	200°C 392°F	300°C 572°F	400°C 752°F	600°C 1112°F	800°C 1472°F	1000°C 1832°F	1200°C 2192°F
Aluminium pure	2 707	0.896	204	8.418	215	202	206	215	228	249				
Lead	11 373	0.130	35	2.343	36.9	35.1	33.4	31.5	29.8					
Iron:														
Pure	7 897	0.452	73	2.034	87	73	67	62	55	48	40	36	35	36
Wrought iron 0.5% C	7 849	0.46	59	1.626		59	57	52	48	45	36	33	33	33
Steel (C max ≈ 1.5%): Carbon steel														
C ≈ 0.5%	7 833	0.465	54	1.474		55	52	48	45	42	35	31	29	31
1.0%	7 801	0.473	43	1.172		43	43	42	40	36	33	29	28	29
1.5%	7 753	0.486	36	0.970		36	36	36	35	33	31	28	28	29
Copper:														
Pure	8 954	0.3831	386	11.234	407	386	379	374	369	363	353			
Aluminum bronze 95% Cu, 5% Al	8 666	0.410	83	2.330										
Molybdenum	10 220	0.251	123	4.790	138	125	118	114	111	109	106	102	99	92
Nickel:														
Pure (99.9%)	8 906	0.4459	90	2.266	104	93	83	73	64	59				
Ni–Cr 90% Ni, 10% Cr	8 666	0.444	17	0.444		17.1	18.9	20.9	22.8	24.6				
Silver:														
Purest	10 524	0.2340	419	17.004	419	417	415	412						
Pure (99.9%)	10 524	0.2340	407	16.563	419	410	415	374	362	360				
Tin, pure	7 304	0.2256	64	3.884	74	65.9	59	57						
Tungsten	19 350	0.1344	163	6.271		166	151	142	133	126	112	76		
Zinc, pure	7 144	0.3843	112.2	4.106	114	112	109	106	100	93				

Source: E. R. G. Eckert and R. M. Drake, *Analysis of Heat and Mass Transfer*, McGraw-Hill, New York (1972). Reprinted by permission of McGraw-Hill, Inc.

Table 9.3. Recommended values for characteristic fire load density various occupancy types.

Substance	Temperature °C	k, W/m·°C	ρ, kg/m^3	C, kJ/kg·°C	α, m^2/s × 10^7
Insulating material					
Asbestos					
Loosely packed	−45	0.149			
	0	0.154	470–570	0.816	3.3–4
	100	0.161			
Asbestos–cement boards	20	0.74			
Sheets	51	0.166			
Balsam wool, 2.2 lb/ft^3	32	0.04	35		
Cardboard, corrugated	...	0.064			
Celotex	32	0.048			
Corkboard, 10 lb/ft^3	30	0.043	160		
Cork, regranulated	32	0.045	45–120	1.88	2–5.3
Ground	32	0.043	150		
Fiber, insulating board	20	0.048	240		
Glass wool, 1.5 lb/ft^3	23	0.038	24	0.7	22.6
Structural and heat-resistant materials					
Asphalt	20–55	0.74–0.76			
Brick:					
Building brick, common	20	0.69	1600	0.84	5.2
Face		1.32	2000		
Carborundum brick	600	18.5			
	1400	11.1			
Chrom brick	200	2.32	3000	0.84	9.2
	550	2.47			9.8
	900	1.99			7.9
Diatomaceous earth,	200	0.24			
moulded and fired	870	0.31			
Fireclay brick,	500	1.04	2000	0.96	5.4
Burnt 2426°F	800	1.07			
	1100	1.09			
Insulating material					
Fireclay brick, burnt 2642°F	500	1.28	2300	0.96	5.8
	800	1.37			
Cement, Portland		0.29	1500		
Mortar	23	1.16			
Concrete, cinder	23	0.76			
Stone 1–2–4 mix	20	1.37	1900–2300	0.88	8.2–6.8
Glass, window	20	0.78 (avg)	2700	0.84	3.4
Corosilicate	30–75	1.09	2200		
Plaster, gypsum	20	0.48	1440	0.84	4.0
Metal lath	20	0.47			
Wood lath	20	0.28			
Stone					
Granite		1.73–3.98	2640	0.82	8–18
Limestone	100–300	1.26–1.33	2500	0.90	5.6–5.9
Marble		2.07–2.94	2500–2700	0.80	10–13.6
Sandstone	40	1.83	2160–2300	0.71	11.2–11.9
Wood (across the grain):					
Balsa 8.8 lb/ft^3	30	0.055	140		
Cypress	30	0.097	460		
Fir	23	0.11	420	2.72	0.96
Maple or oak	30	0.166	540	2.4	1.28
Yellow pine	23	0.147	640	2.8	0.82
White pine	30	0.112	430		

Source: J. P. Holman, *Heat Transfer*, McGraw-Hill, New York (1966). Reprinted by permission of McGraw-Hill, Inc.

In the case of *protected fire loads* (combustible material stored within a container such as a steel filing cabinet), the effective fire load may be less and will depend upon the fire temperature and duration, container integrity and the nature of the combustibles. In such circumstances, with a calorific value of 40% of that of the total contents, the equivalent fire load may be expressed as:

$$q_{\mathrm{e}} = \frac{q_{\mathrm{ki}}}{H_{\mathrm{W}}} \tag{9.7}$$

where
q_{e} = equivalent fire load density of wood (kg/m^2)
q_{ki} = measured fire load density (MJ/m^2)
H_{W} = calorific value of dry wood (18 MJ/m^2).

(d) Safety factors

Safety factors have been discussed under loads. If a fire may put a large number of people at risk, it may be appropriate to include additional safety factors within the design. In buildings where large numbers of people are unaware of exit routes (e.g. shopping centres), it will be appropriate to include additional safety factors to take account of uncertainties in the distribution of occupants between the available exits. The design can be acceptable if the available safe escape time (ASET) is:

$$\mathrm{ASET} \geq \Delta t_{\mathrm{det}} + \Delta t_{\mathrm{pre}} + (\lambda_{\mathrm{flow}} \Delta t_{\mathrm{flow}}) \tag{9.8}$$

where
t_{det} = detection time
Δt_{pre} = pre-movement time
Δt_{flow} = flow time
λ_{flow} = design factor applied to flow time
= 1 for offices and industrial premises
= 2 for large and complex public buildings
such that

$$\mathrm{ASET} \geq t_{\mathrm{esc}} = t_{\mathrm{det}} + \Delta t_{\mathrm{pre}} + \lambda_{\mathrm{flow}} \tag{9.9}$$

Where dynamic analysis using finite element technique for large buildings is required, the value of ASET must be considered in time-steps and overall time required for the resistance. A reference is made to Appendix (I).

Where the occupants remain in tall and complex buildings for an extended period while fire fighting operations take place and where structural failure threatens the life of the occupants, it is recommended that the adequacy of the structural fire should be evaluated as follows:

$$L_{\mathrm{crit}} \geq \lambda_{\mathrm{str}} L \tag{9.10}$$

where
L_{crit} = fire load at structural failure
L = design fire load (805 fractile)
λ_{st} = design factor = 1.5 for tall and unsprinklered buildings >30 m
= 1.0 for low rise <30 m
= 1.0 for sprinklered buildings >30 m
however, if Δt_{flow} is estimated at 2½ minutes with an inherent factor of 2, the ASET value will be 5 min. If the travel distance is increased and Δt_{flow} is raised to 3 min it will be necessary to increase ASET to 6 min such that

$$\frac{\mathrm{ASET}}{\Delta t_{\mathrm{flow}}}\ (\text{base case}) \leq \frac{\mathrm{ASET}}{\Delta t_{\mathrm{flow}}}(\text{new design}) \tag{9.11}$$

This increase in ASET may be achieved by a large smoke reservoir, smoke extract system or by controls on combustible materials that would reduce the expected rate of fire growth. If

$$\frac{\text{ASET}}{\Delta t_{\text{flow}}} \text{ (base case)} < 1.0 \tag{9.12}$$

It should be checked that the base case is not unsafe and that an appropriate fire growth rate has been chosen for the calculations.

The traditional criteria can also be looked at in the following manner.

Travel distance may be increased by a factor of 2 if a smoke control system is provided.
Fire resistance: the required fire resistance is increased by:

(i) ½ hour for every 10 m height to a maximum of 30 m
(ii) 1 hour for basement 10 m deep and ½ hour at the basement level with sprinkler systems.

Compartment size: the floor area is increased by a factor of 2 where a sprinkler system is provided.

The Russians define the fire resistance of the building as the ability of the structure to retain its operating functions in the period of fire for some definite time, after which the structure losses its carrying or protecting capacity. Liley (212, 213) reports that the heat of the fire, q, which he calls warmth of the fire, is given as:

$$q = z\beta_{\text{c}}Q_{\text{H}}n \tag{9.13}$$

where
z = factor for chemical burning
β_{c} = coefficient of the speed of burning
Q_{H} = the lowest warmth of burning
n = weight speed of burning.
The fore load or 'heat load' can be found by:

$$Q_{\text{r}} = Q_{\text{a}}f(\text{Bi; Fo}) \tag{9.14}$$

where
Q_{r} = fire heating load during the period of time
Q_{a} = maximum heat content of the structure
$f(\text{Bi; Fo})$ = function of the Bio and Fourie criteria.
The fire resistance limit corresponding to these fire load equations is given by:

$$L_{\text{F}} = K_{\text{o}}\tau \tag{9.15}$$

where
L_{F} = required fire resistance limits in hours
τ = time of the fire in hours
K_{o} = factor for fire resistance
= 1.5 for vertical structures
= 2.5 for fire-proof structures
= 1.25 for horizontal structures.
This criterion is taken from 'Building Standards and Rules' SNi 11-A.585.

Japan, in its State of the Art Report No. 5A 1978, recommends a fire load of 36 kg/m^2, provided the duration of the fire does not exceed 45 min and the fire temperature does not exceed 150°C.

The Swedes, in their state of the Art Report 5B (1987), assume that tall buildings cannot be evacuated during a fire: they insist that the buildings should be provided with fire protection measures. They have established a relation between effective fire load q and resistance time τ.
For a structure in fire compartment
The fire load q_{c} initially is given by:

$$q_{\text{c}} = \frac{1}{A_f}\Sigma m_v H_v \quad (\text{Mcal/m}^2) \tag{9.16}$$

where
A_f = floor area (m^2)
m_v = the total weight (kg)
H_v = effective heat value (Mcal/m^2) for each individual material v
q_c is also given in terms of an equivalent amount of wood per unit area A_f.

A modified formula exists for q_c:

$$q_c = \frac{1}{A_t} \Sigma m_v H_v \tag{9.17}$$

in which A_t is the total area of the surfaces bounding the compartment (m^2).

The connection between the different fire load definitions is given by:

$$q_c = \frac{A_t}{A_f} q \quad (\text{Mcal/m}^2) \quad \text{and} \quad q_c = \frac{A_t}{4.5 A_f} q \quad (\text{kg/m}^2) \tag{9.18}$$

A further development, leads to a more differentiated characterization of the fire load. The value of q is:

$$q = \frac{1}{A_t} \Sigma \mu_v m_v H_v \tag{9.19}$$

in which μ_v denotes a dimensionless coefficient between 0 and 1, given the real degree of combustible for each individual component v of the fire load. The coefficient μ_v depends on the duration of the fire and the temperature-time characteristics of the fire compartment.

The range of fire density
It is concluded that for q the temperature–time relation is very important.

9.4.3 *Temperature–time relation*

A great deal of research, involving theory, experiment and data monitoring on site (41-250), has been carried out and is still continuing with regard to the time–temperature relation. In this section a few examples are given to show different practices.

In general it is widely believed that the temperature course of fire may be divided into the following three periods:

a) the growth period
b) the fully developed period
c) the capacity period.

To determine the temperature course, it is necessary to know at each moment during a fire rate at which heat is produced and the rate which heat is lost to exposed materials and surroundings. Several of the parameters that determine heat production and heat losses can be categorized as follows:

a) material properties
b) room dimensions
c) emissivity of flames
d) exposed materials

} predicted with reasonable accuracy

e) gases that burn outside the room
f) loss of unburnt particles through window
g) temperature difference in the room.

} predicted with less reasonable accuracy

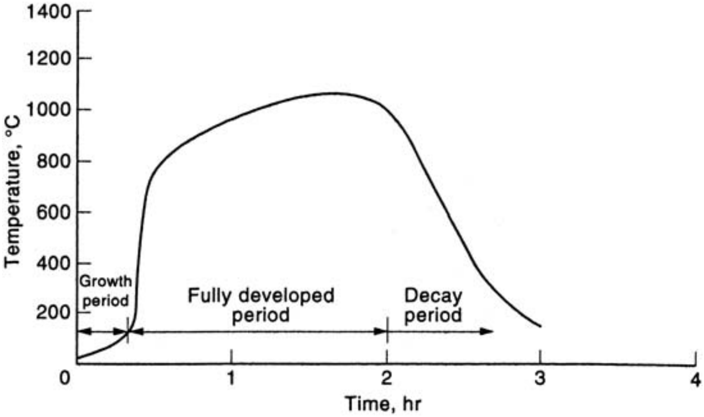

Figure 9.1. Idealized temperature course of fire (reproduced from report No. 5A, 1978).

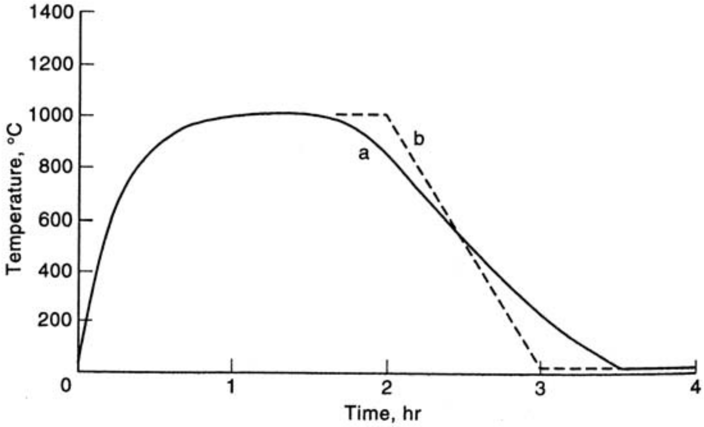

Figure 9.2. Temperature curves for fire resistance design (reproduced courtesy of the ASCE).

h) temperature change with time during the fire, which in turn depends on:
   i) amount
   ii) surface area
   iii) arrangement of combustible contents
   iv) velocity and direction of wind
   v) outside temperatures.

} difficult to predict.

Various unpredictable and variations in approaches exist for computing fire load densities. However, it is possible to indicate for any compartment a characteristic temperature–time curve whose effect will not be exceeded during the lifetime of the building. Such curves are useful for the fire-resistance design of buildings. Tsuchiya, Y. et al have given results (255); Figures 9.1 and 9.2 summarize the results of the temperature-time curve for the resistance design.

The opening factor F which has an effect on the temperature–time relation is given by:

$$F = \frac{A_{\mathrm{W}}\sqrt{H^*}}{A_{\mathrm{t}}} \tag{9.20}$$

Table 9.4. Factors for an enclosure.

Factor	Description
k	Thermal conductivity of bounding material: 1.16 W/m K for a heavy material ($\rho \geq 1600\,\text{kg/m}^3$) 0.58 W/m K for a light material ($\rho < 1600\,\text{kg/m}^3$)
ρ_c	Volumetric specific heat of bounding material: 2150×10^3 J/m^3·K for a heavy material ($\rho \geq 1600\,\text{kg/m}^3$) 1075×10^3 J/m^3·K for a light material ($\rho < 1600\,\text{kg/m}^3$)
A_T	Total inner surface area bounding the enclosure including window area: 1000 m^2
H	Window height: 1.8 m
ε	Emissivity for radiation transfer between hot gases and inner bounding surface of the enclosure: 0.7
α_c	Coefficient of heat transfer by convection between fire and inner bounding surface area: 23 W/m^2·K
α_u	Coefficient of heat transfer between outer bounding surface area and surroundings: 23 W/m^2·K
c	Specific heat of combustion gases: 1340 J/Nm^3·°C
G	Volume of combustion gas produced by burning 1 kg of wood: 4.9 Nm^3/kg
q	Heat released in the enclosure by burning 1 kg of wood: 10.77×10^6 J/kg
T_0	Initial temperature: 20°C
V	Volume of enclosure*: 1000 m^3
Δx	Thickness of elementary layers of bounding material: 0.03 m
Δt	Time increment: 0.0004167 hr
D	Thickness of bounding material: 0.15 m

*It can be shown that the influence of the volume of the enclosure on the fire temperature is negligible.
Courtesy: ASCE.

Where
A_W = area of the openings compartments or enclosures
H^* = height of the opening
A_t = area of the bounding surface (A_t in British codes).

The rate of burning R of the combustible materials in an enclosure is given by:

$$R = 330 A_W \sqrt{H^*} \tag{9.21}$$

The duration time

$$\tau = \frac{q_c A_t}{330 A_W \sqrt{H^*}} = \frac{Q_c}{330F} \tag{9.22}$$

where
q_c = the fire load/unit area.
Here

$$q_c = 330F\tau \tag{9.23}$$

Table 9.4 gives information for various factors regarding the enclosure needed in the above equations. If $R = KA_W\sqrt{H*}$, then the value of K in imperial units is 330; 5.5 to 6 kg/(min m$^{5/2}$) for ¼A_t and 9 to 10 kg min m$^{5/2}$) for small area A_t has been adopted in Denmark, Japan, the USA, the UK and the former USSR.

As an example if the window height H^* is 1.8 m, A_W = total opening = 356 m^2 and A_t = 6337 m^2, the temperature opening factor F will be 0.0754.

The temperature curves for the fire resistance design can be described by:

$$T = 250(10F)^{0.1/F^{0.3}} \mathrm{e}^{-F^2 t}[3(1-\mathrm{e}^{-0.6t}) - (1-\mathrm{e}^{-3t}) + 4(1-\mathrm{e}^{-12t})] + C\left(\frac{600}{F}\right)^{0.5} \tag{9.24}$$

where
T = the fire temperature (°C)
t = time (hr)

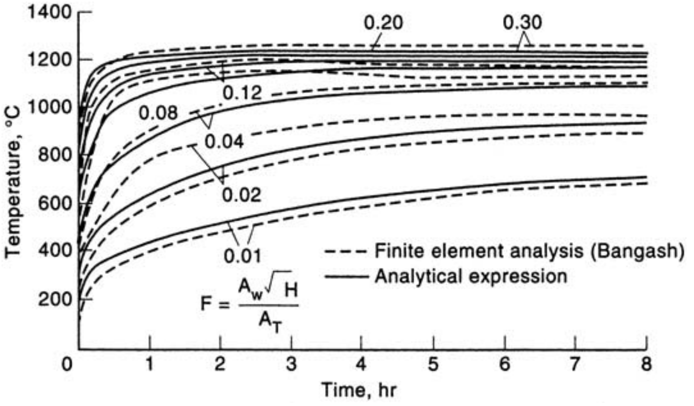

Figure 9.3. Comparison between temperature-time curves obtained by solving a heat balance and those described by an analytical expression for ventilation-controlled fires in enclosures bounded by dominantly heavy materials ($\rho \geq 1600\,\mathrm{kg/m^3}$).

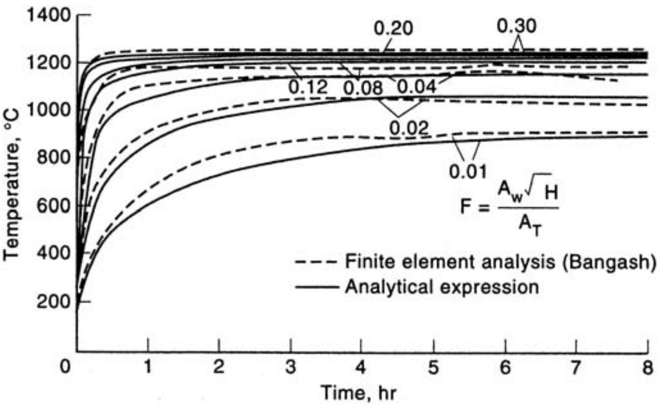

Figure 9.4. Comparison between temperature-time curves obtained by solving a heat balance and those described by an analytical expression for ventilation-controlled fires in enclosures bounded by dominantly light materials ($\rho \geq 1600\,\mathrm{kg/m^3}$).

F = opening factor ($\mathrm{m^{1/2}}$)
C = constant based on the properties of the bounding material in fire
= 0 for heavy materials with $\rho \geq 1600\,\mathrm{kg/m^3}$
= 1 for light materials with $\rho \geq 1600\,\mathrm{kg/m^3}$
ρ = density

$$t = \text{time} \leq \frac{0.08}{F} + 1 \tag{9.25}$$

If

$$t > \frac{0.08}{F} + 1 \quad \text{assume} \quad t = \frac{0.08}{F} + 1 \tag{9.26}$$

If $F > 0.15$ take $F = 0.15$ for design purposes. Figures 9.3 to 9.6 show some temperature-time curves for design purposes.

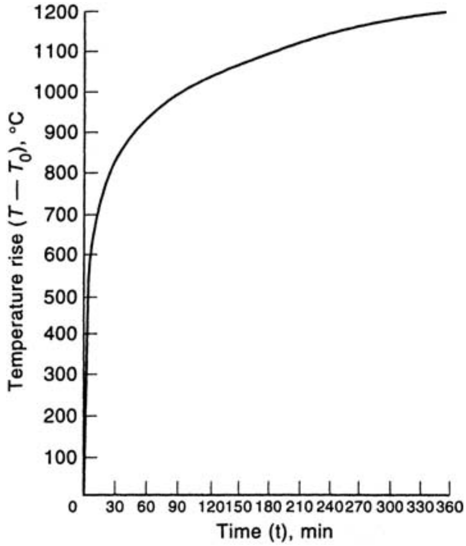

Figure 9.5. Standard time–temperature curve.

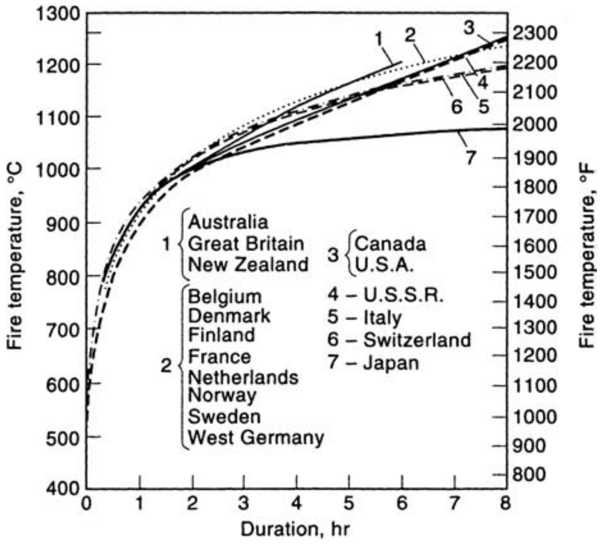

Figure 9.6. Standard fire temperature–time relations used in various countries for testing of building elements (Bangash, M.Y.H., Prototype Building, Thomas Telford, 1999) (298).

The temperature course of fire during the decay period is given by:

$$T = -600\left(\frac{t}{\tau} - 1\right) + T\tau \tag{9.27}$$

$T = 20$ if $T < 20$°C

The International Standards Organisation (ISO) give the following expression for their standard curves (291):

$$T - T_0 = 345\log_{10}(8t + 1) \tag{9.28}$$

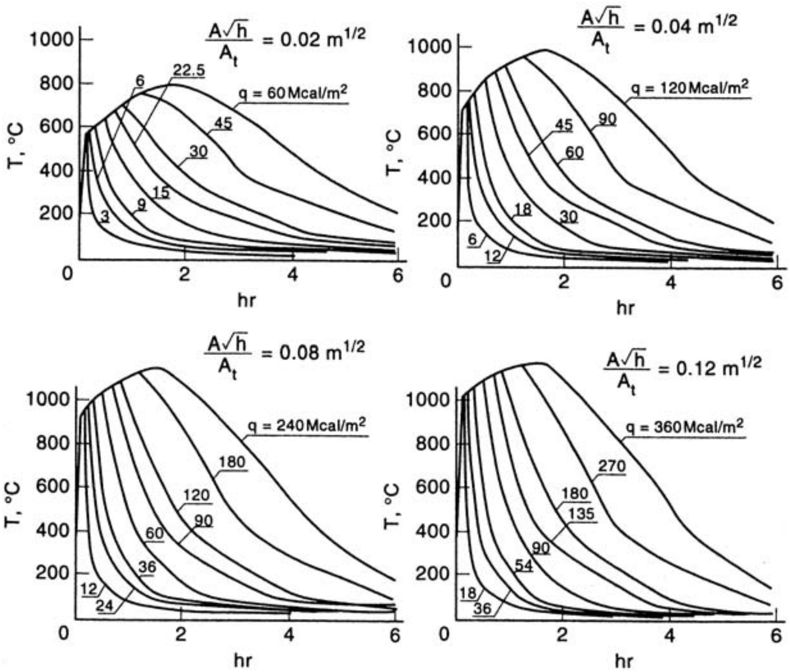

Figure 9.7. Temperature–time–q_c curves for F-values Pettersson (125, 219, 220).

where
t = time (hr)
T = the temperature (°C) = T_f and
T_0 = initial temperature (°C).

In North America an analytical expression exist for temperature–time curves in the form of an exponential function:

$$T - T_0 = a_1(1 - e^{a_4 t}) + a_2(1 - e^{a_5 t}) + a_3(1 - e^{a_6 t}) \tag{9.29}$$

where $a_1 = 532$ for °C, 957 for °F; $a_2 = -186$ for °C, -334 for °F; $a_3 = 820$ for °C, 1476 for °F; $a_4 = -0.6$; $a_5 = -3$; $a_6 = -12$.

This heat transfer equation is integrable and is used in the finite element analysis.

A number of countries have been involved in fire-temperature-time analysis and research. Harmathy (192, 275a, 276) is the first researcher to have collected data from some countries and presented a comparative study graph for the temperature–time relation. Figure 9.7 shows the Harmathy (192, 275a, 276) with data from a few other countries added.

The last step is to see how to fire loads q_c can be graphically related to the temperature–time curve. For design purposes, it is important for the load to be algebraically added to other load. Pettersson (219) has presented four graphs for temperature–time–q_c relations, for

$$F = \frac{A_W\sqrt{H^*}}{A_T} = 0.02\sqrt{m}, \quad 0.04\sqrt{m}, \quad 0.08\sqrt{m} \quad \text{and} \quad 0.12\sqrt{m}.$$

He has taken heat capacity $\gamma c_p = 400\,\text{kcal/m}^3\cdot°\text{C}$, thermal conductivity $\lambda = 0.7\,\text{kcal/m}\cdot\text{h}\cdot°\text{C}$. the value of q_c is in Mcal/m^2. Figures 9.7 and 9.8 show such relationships for four different openings.

British practice allows the opening factor $F = 0.05\sqrt{m}$ for heavy bounding materials. Figure 9.7 shows a simplified temperature-time-fire load q_c curve for the opening factor $F = 0.05\sqrt{m}$. This

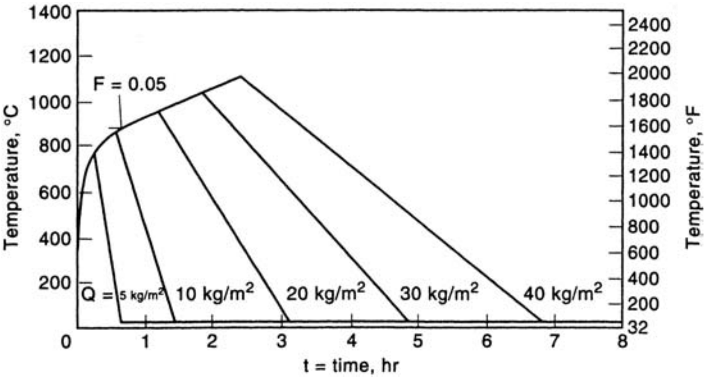

Figure 9.8. Temperature–time–q_c curve for F = 0.005 British and American practice (930,955).

curve is in full agreement with American practice. The standard temperature-time curve adopted by BS 476: Part 8, 1972 is shown in Figure 9.5 and is compared with other countries in Figure 9.6.

9.4.4 *Material properties*

Now that the fire–time relation has been thoroughly reviewed, it is necessary to look at various materials and how they react to the fire environment. The most common materials are steel, concrete, timber and brick. The properties of these materials must be known prior to design of building structures.

9.4.4.1 *Steel in Escalators/Travelators*

The material properties that affect the temperature rise and distribution in a structural steel section are

a) Thermal conductivity
b) Specific heat.

The thermal conductivity K is by the USDA Agricultural Handbook No. 72.1987 as

$$\begin{aligned} K &= -0.022T + 48 \quad \text{for } 0 \le T \le 900^\circ\text{C} \\ &= 28.2 \quad\quad\quad\quad\;\; \text{for } T > 900^\circ\text{C} \end{aligned} \tag{9.30}$$

where T = temperature in steel (°C).

Specific heat is the characteristic that describes the amount of heat input required to raise a unit mass of material a unit of temperature. A constant of 600 J/(kg· K) of the specific heat of steel for the entire temperature range is a reasonable approximation.

Where thermal conductivity and specific heat are involved, thermal diffusivity of the material cannot be ignored, since it is a measure of how the heat is dissipated through the material and is the ratio of the thermal conductivity to the volumetric specific heat of the material. The relationship for thermal diffusivity 'a' is given by

$$a = K/\rho c \tag{9.31}$$

where
K = thermal conductivity
ρ = density
c = specific heat.
In British practice

$c = c_s = 0.52$ kJ/(kg·°C)
$\rho = \rho_s = 7850$ kg/m^3
$K = K_s = 50$ W/(m·°C)

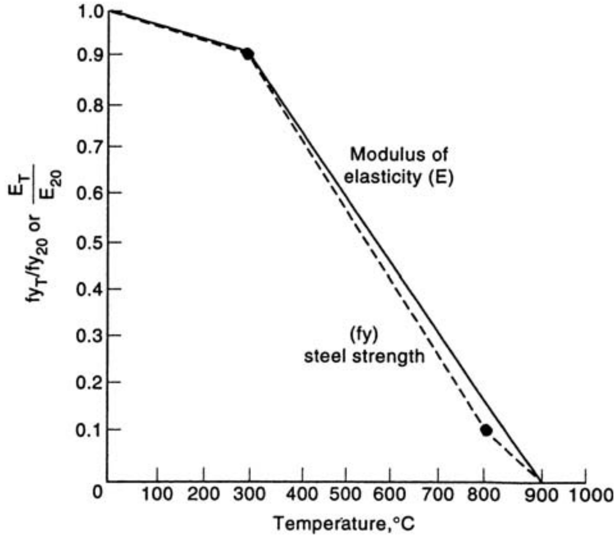

Figure 9.9. Relationship between steel material properties and temperatures in °C (British practice).

$$\left.\begin{array}{ll} \text{At 20°C, the elastic limit (Young's modulus) is:} & E_{20} = 206\,\text{kN/mm}^2 \\ \text{Elastic limit at 20°C stress:} & fy_{20} = 250\,\text{N/mm}^2 \\ \text{Ultimate strength:} & ft_{20} = 450\,\text{N/mm}^2 \end{array}\right\} \text{Grade 43A (BS4360)}$$

From these basic values, the properties at other temperatures are as given below.

	Temperature range		
Elastic properties	20–300°C	300–700°C	700–900°C
$\dfrac{fy_T}{fy_{20}}$	$1 - \dfrac{T°}{3000}$	$0.9 - \dfrac{T° - 300}{500}$	$0.1 - \dfrac{T° - 700}{200}$
$\dfrac{E_T}{E_{20}}$	$1 - \dfrac{T°}{3000}$	$0.9 - \dfrac{T° - 300}{611}(300 - 900°C)$	

Thus it is shown that the modulus of elasticity of steel decreases with increasing temperature. The strength of hot-rolled steel depends on yield and tensile strength. Figures 9.9 and 9.10 show these relations for British and American practices respectively. Lie and Stanzak (48, 62, 86) give the yield strength of steel with temperature as

$$Fy = Fy_0(1 - 0.78\theta - 1.89\theta^4) \tag{9.32}$$

where
$\theta = (T_F - 68)/1800$
T_F = temperature of steel (°F).
The European Convention for Constructional Steelwork (93, 292) utilizes the same concept:

$$Fy = Fy_0(1 + T_C/(767\ln(T_C/1750))) \qquad 0 < T_C \leq 600°C \tag{9.33}$$

$$Fy = Fy_0((108 - T_C/1000)/(T_C - 440)) \qquad 600° < T_C \leq 1000°C \tag{9.34}$$

where
Fy = yield stress at elevated temperature
Fy_0 = yield stress at room temperature
T_C = temperatures of steel (°C)

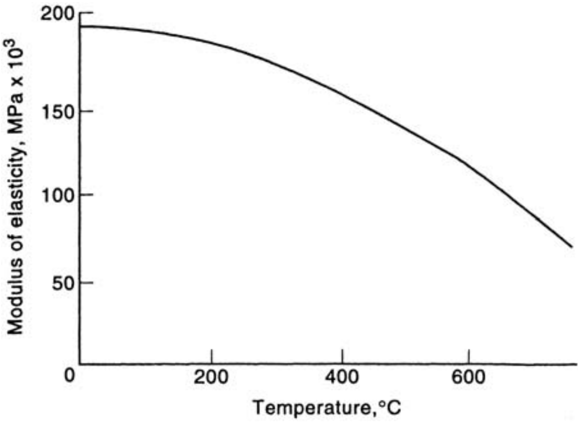

Figure 9.10. Modules of elasticity of steel at elevated temperatures (American practice).

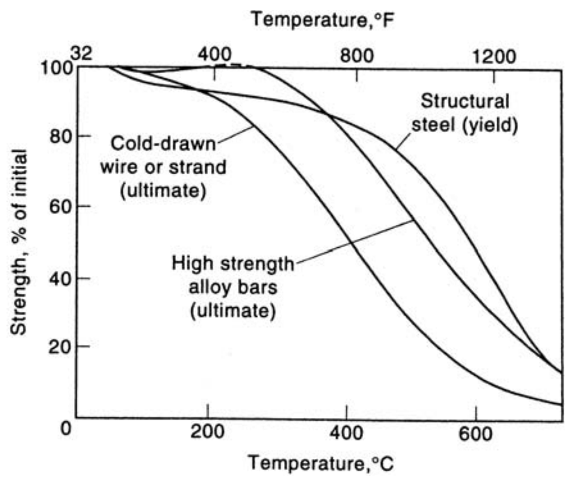

Figure 9.11. Strength of some steels at high temperature.

Figure 9.11 shows strength versus temperature as used in fire resistance.

The American Iron and Steel Institute (63, 263–266) gives the thermal expansion α (temperatures up to 650°C) as:

$$\alpha = (11 + 0.0062T) \times 10^{-6}$$

where $T =$ steel temperature (°C).

The Eurocode ENV 1993-1-2 has an approach originally specified by ECCS as a design guide (1983, 1985) which calculates the ratio of the required strength at elevated temperatures to that at ambient in order to ensure that the structural steel components do not collapse. Hence, for beams, the elastic design should be based on:

$$\frac{f_{\mathrm{a\,max},\theta\mathrm{cr}}}{f_{\mathrm{ay},20^\circ\mathrm{C}}} = \left(\frac{\kappa}{\theta}\right)\left(\frac{W_{\mathrm{el}}}{W_{\mathrm{pl}}}\right)\left(\frac{q_{\mathrm{sd,el}}}{q_{\mathrm{fi,d}}}\right) \tag{9.35}$$

where $f_{\mathrm{amax},\theta\mathrm{cr}}/f_{\mathrm{ay},20^\circ\mathrm{C}}$ is the stress ratio, κ is a factor allowing for the non-uniform temperature distribution, geometric imperfections and strength variations, θ is a factor, greater than unity; allowing for redistribution between the elastic ambient moment distribution and the plastic distribution under fire, W_{pl}/W_{el} is the ratio between the plastic and elastic section module (known as the shape factor), and $q_{fi,d}/q_{sd,el}$ is the ratio of the design load (action) in the fire to the elastic design load (action).

In order to design a beam plastically, the relationship is given as:

$$\frac{f_{a\max,\theta cr}}{f_{ay,20^\circ C}} = \kappa \left(\frac{q_{sd}}{q_{fi,d}} \right) \tag{9.36}$$

where $q_{fi,d}/q_{sd}$ is the ratio of the fire action to the ultimate action.

The Eurocode now gives two methods for steelwork design:

a) Load-carrying capacity
b) Limiting temperature criterion.

(a) Load-carrying capacity

$$S_{d,F} \leq R_{d,F(t)} \tag{9.37}$$

where $S_{d,F}$ is the design value of the internal force to be resisted and $R_{d,F(t)}$ is the design resistance at time t and should be calculated in accordance with ENV 1992-1-1 except for the use of temperature-modified mechanical properties of steel.

For **tension members** (clause 4.2.21)

$$R_{d,F(t)} = k_{amax,\theta} R_d \tag{9.38}$$

where $k_{amax,\theta}$ is the normalized strength reduction at a temperature of θ_a and R_d is the ambient design resistance. Note that if θ_a is less than 550°C at any cross-section, the member may be assumed to be able to carry the fire-induced loading. Where the temperature in a member is non-uniform, then θ_a should be taken as the maximum value in the cross-section.

For **beams** (class 1 and 2, clause 4.2.2.2), under uniform temperature, the rules for tension and bending are the same except that R_d is the design bending resistance.

Under non-uniform temperature distribution, the temperature distribution $R_{d,F(t)}$ is:

$$R_{d,F(t)} = \frac{R_{d,F(\theta)}}{\kappa} \tag{9.39}$$

where κ is a factor allowing for temperature gradient and varying end conditions (Pettersson and Jonsson (219, 220) and $R_{d,F(\theta)}$ is the design resistance calculated from the maximum temperature in the cross-section:

$$\left.\begin{aligned} \kappa &= 1.0 \quad \text{exposed on 4 sides} \\ &= 0.7 \quad \text{exposed on 3 sides} \end{aligned}\right\} \text{simple beams}$$

$$\left.\begin{aligned} &= 0.85 \quad \text{exposed on 4 sides} \\ &= 0.7 \quad\; \text{exposed on 3 sides} \end{aligned}\right\} \text{hyperstatic beams}$$

For **compression members** (class 1 or 2 section classification; clause 4.2.2.3)

$$R_{d,F(t)} = \frac{k_{amx,\theta} R_d}{1.2} \tag{9.40}$$

where R_d is the ambient design strength calculated using the buckling curve c of ENV 1993-1-1, and the 1.2 factor is an empirical correction factor.

θ_a here is less than 510°C for members other than tension members $\theta_a < 350$°C.

(b) Limiting temperature criterion

For a member to perform adequately in a fire, ENV 1993-1-2 requires that

$$\theta_a \leq \theta_{a,cr} \tag{9.41}$$

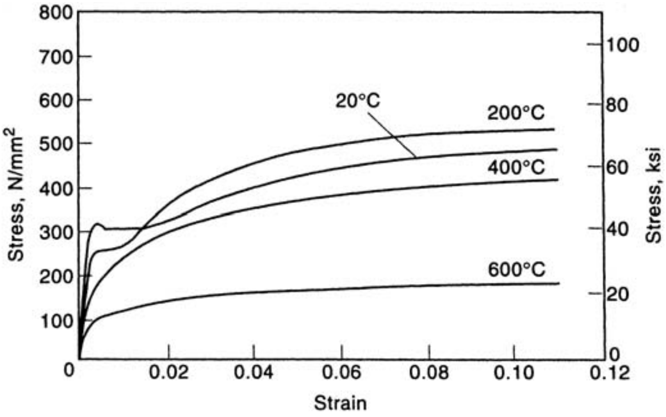

Figure 9.12. Stress–strain curves for a mild steel (ASTM A 36) at various temperatures.

where
θ_a = actual temperature
$\theta_{a,cr}$ = critical temperature which depends on degree of loading $\mu_{(0)}$.

The following formula is suggested using plastic theory and strength reduction due to temperature:

$$\theta_{\mathrm{a,cr}} = 78.38 \ln\left[\left(\frac{1}{0.9674(\mu_{(0)})^{3.833}} - 1\right)^{1/2}\right] + 482 \tag{9.41a}$$

The parameter $\mu_{(0)}$ is the degree of utilization and is given by:

$$\mu_{(0)} = \frac{S_{d.F}}{R_{d.F(0)}} \tag{9.42}$$

9.4.4.2 *Calculations of fire resistance of steel members in travelators*

The temperature rise in a steel structure or its elements can be estimated using quasi-steady-state equation. The equations are derived from one-dimensional heat transfer equations.

(a) *Unprotected steel members*

The equation for temperature rise during a short time period Δt is given by:

$$\Delta T_{\mathrm{s}} = \frac{\alpha}{C_{\mathrm{s}}(W/D)}(T_{\mathrm{f}} - T_{\mathrm{s}})\Delta t \tag{9.43}$$

where
ΔT_{s} = temperature rise in steel (°F/°C)
α = heat transfer for coefficient from exposure to steel member (Btu/(ft^2·sec) or W/m)
D = heated perimeter (ft or m)
C_{s} = specific heat for steel (Btu/(lb·°F)) or J/(kg·°C)
W = weight of steel (lbf/ ft or kg/m)
T_{f} = fire temperature ($\bar{\mathrm{R}}$ or K)
T_{s} = steel temperature ($\bar{\mathrm{R}}$ or K)
Δt = time step (sec)
where

$$\alpha = \alpha_{\mathrm{r}} + \alpha_{\mathrm{c}}$$
$$\alpha_{\mathrm{r}} = \text{radiative portion of heat transfer.} \tag{9.44}$$

(Mulhotra considers:

$$= \frac{1}{W/D} = \frac{S}{m_S} \frac{P_s}{\rho_s A_s} \tag{9.45}$$

where $S =$ area, $m_s =$ mass)
$\alpha_c =$ convective portion of heat transfer
$= 9.8 \times 10^{-4}$ to 1.2×10^{-3} Btu/(ft$^2 \cdot$ sec)
$= 20$ to 25 W/(m$^2 \cdot$ °C)

$$\Delta t < \begin{cases} 15.9\, W/D & \text{Imperial units} \\ 3.25\, W/D & \text{SI units} \end{cases}$$

$P_s/A_s =$ shape factor
α_r (based on the Stefan-Boltzman law for radiation)

$$= \frac{5.77 w_r}{T_f - T_s} \left[\left(\frac{T_f + 273}{100} \right)^4 - \left(\frac{T_3 + 273}{100} \right)^4 \right] \text{W/(m} \cdot \text{°C)} \tag{9.46}$$

$w_r =$ emissivity of flames $= 0.7$ for steel surfaces.
In American practice $w_r = E_f$ and α_r is given as:

$$\begin{aligned} \alpha_r &= \frac{C_1 E_f}{T_f - T_s} (T_f^4 - T_s^4) \\ C_1 &= 4.76 \times 10^{-13}\ \text{Btu/(sec} \cdot \text{ft}^2) R^4 \\ &= 5.77 \times 10^{-8}\ \text{W/m}^3 K^4. \end{aligned} \tag{9.47}$$

The values of w_r or E_f are given for more cases in Table 9.5 along with the shape factor P_s/A_s.
The fire temperature T_f is given evaluated at time t according to ASTME-119 test

$$T_f = C_1 \log_{10} (0.133t + 1) T_0 \tag{9.48}$$

Where t is time and

$$\begin{aligned} C_1 &= 620 \text{ with } T_f, T_0 \text{ in °F} \\ &= 34.5 \text{ with } T_f, T_0 \text{ in °C} \\ T_0 &= \text{initial temperature.} \end{aligned}$$

(b) *Protected steel members*
Here the insulating material is considered along with steel for the overall thermal resistance. If the thermal capacity of the insulating material is neglected, the value of ΔT_s is given as

$$\Delta T_s = \frac{k}{c_s h W/D} (T_f - T_s) \Delta t. \tag{9.49}$$

All symbols are defined above, except k and h:
$k =$ thermal conductivity of the insulating material Btu/(ft $\cdot$ sec $\cdot$ °C) or W/(m $\cdot$ °C)
$h =$ protection thickness (ft or m).
Conditions:
(a) If the thermal capacity of the material, then the following inequality is true:

$$c_s = \frac{W}{D} > 2 c_i \rho_i h. \tag{9.50}$$

Table 9.5. Emissivity ω_r or E_f, heated perimeters and shape factors for steel shapes.

Type of construction exposed to fire	ω_r or E_f	Shapes	Heated perimeter*	Shape factor unprotected steel†
1. Columns on all sides	0.7	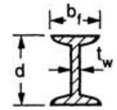	$D = 4b_f + 2d - 2t_w$	$\dfrac{D \text{ or } P_s}{A_s}$
2. Columns outside face	0.3	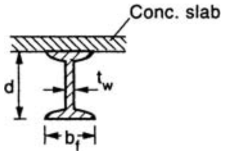	$D = 3b_f + 2d - 2t_w$	$\dfrac{D \text{ or } P_s}{A_s}$
3. Girder with $\dfrac{\text{width}}{\text{depth}} \not< 0.5$	0.5	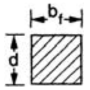	$D^2 = \dfrac{(b_f + d)}{b_f d}$	$\dfrac{D \text{ or } P_s}{A_s}$
4. Girder with $\dfrac{\text{width}}{\text{depth}} < 0.5$	0.7	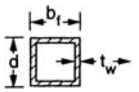	$D = \dfrac{b_f + d}{t_w(b_f + d - 2t_w)}$	$\dfrac{D \text{ or } P_s}{A_s}$
5. Box or lattice girders	0.7	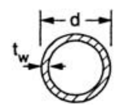	$D = \dfrac{4d}{d^2 - (D - 2t_w)^2}$	$\dfrac{D \text{ or } P_s}{A_s}$
6. Girder with concrete floor slab, only underside of the bottom flange exposed	0.5	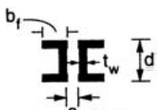	$D = 8b_f + 2d + 2a - 4t_w$	$\dfrac{D \text{ or } P_s}{A_s}$
7. Floor girder with slab on the top flange	0.5	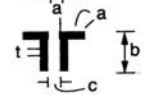	$D = 4a + 2b + 2c$	$\dfrac{D \text{ or } P_s}{A_s}$

* Indicates the surface through which the heat is flowing through the steel.
† The shape factor is the rise of temperature of a steel section.
A_s = surface area.

(b) If the thermal capacity is considered when gypsum and concrete are used as insulating materials, the value of ΔT_s can be written as:

$$\Delta T_s = \frac{k}{h}\left(\frac{T_f - T_s}{c_s(W/D) + \frac{1}{2}c_i\rho_i h}\right)\Delta t \tag{9.51}$$

All symbols are defined above except c_i *and* ρ_i.
c_i = specific heat of insulating material (Btu/(lb · °F)) or J/(kg · °C)
ρ_i = density of insulating material (lb/ft^3 or kg/m^3).
Figure 9.13a–d shows the relationship between D/A_s versus temperatures and durations for various values of h/k values.
The European Commission suggests in Eurocode that the value of Δt can be defined as follows:

$$\Delta t \not> \frac{25\,000}{D/A_s}$$

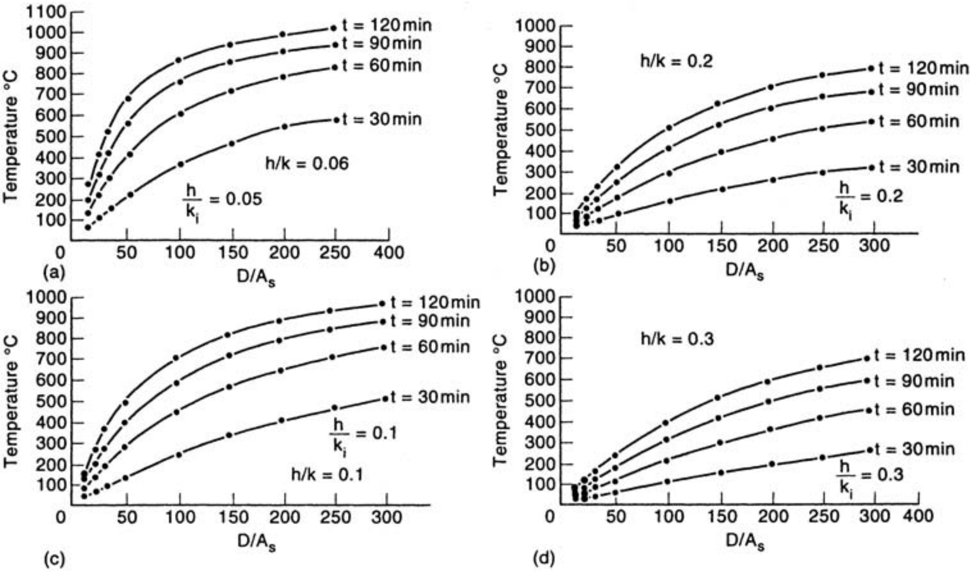

Figure 9.13. Relations between D/A_s versus temperature versus duration for h/k ratios.

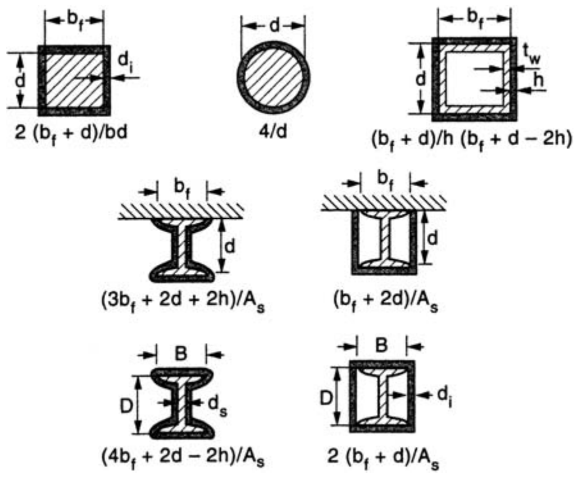

Figure 9.14. Shape factors for protected steel.

Generally, the shape factor for D/A_s is in the range of 10 to 300 for an average resulting emissivity (W_r or E_f) = 0.5. Figure 9.14 shows the shape factors for protected steel sections.

Heat transfer analyses can be very tedious and involved. Computer programs have been developed and the outputs are translated into graphs. Two of such graphs are known as Jeanes' Graph (Fig. 9.15) and Lie's Graphs (47, 48). Jeanes (44) formulated a series of time-temperature graphs of protected steel beams. The protection is generally provided by a specific spray-applied cementitious material with a range of 0.5 in. (12.7 mm) to 1.5 in. (38 mm). They are commonly used for wide-flanged beams. Figure 9.15 shows W/D_s of the beam versus fire endurance for various insulation thicknesses.

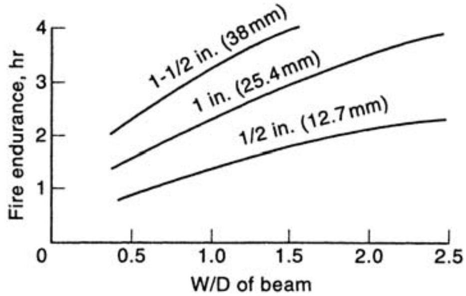

Figure 9.15. Fire protection and endurance of steel beams (average section temperature 1000°F) ASTME-119.

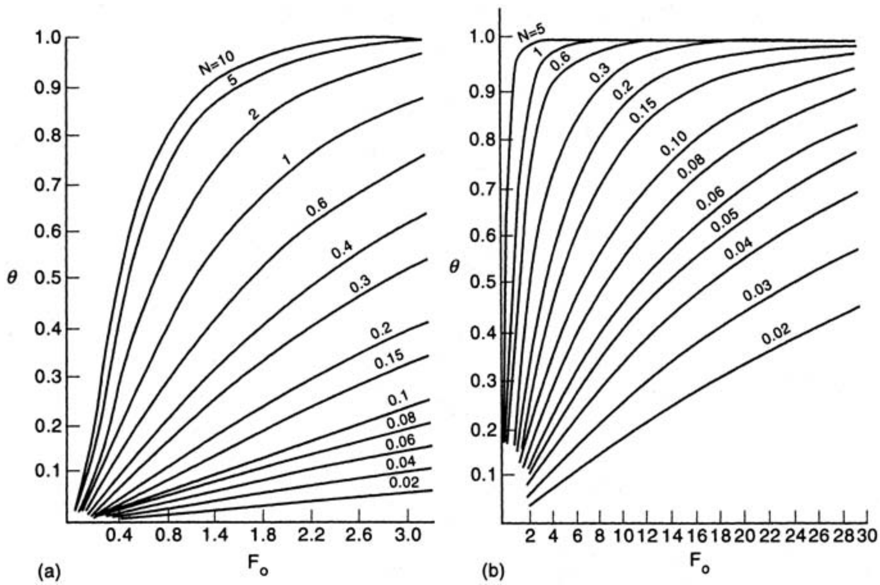

Figure 9.16. Lie's graphs: dimensionless steel temperatures versus Fourier numbers (62, 86, 92, 146, 206–210).

Lie's graphs are shown in Figure 9.16 In order to use these graphs, some dimensionless parameters have to be evaluated: Fourier number F_0 for the layer' and N and 'θ' defined below:

$$F_0 = \frac{\mathrm{d}t}{h^2} \tag{9.52}$$

$$N = \frac{\rho_i c_i h}{c_{\mathrm{S}}(W/D)} \tag{9.53}$$

$$\theta = \frac{T - T_0}{\mathrm{T_m} - T_0} \tag{9.54}$$

The mean temperature T_{m} with a heating time t for these graphs is calculated from the standard time-temperature curve:

$$\begin{aligned} T_{\mathrm{m}} &= 150(\ln 480t - 1) - \frac{30}{t}, T \quad (^\circ\mathrm{C}) \\ &= 270(\ln 480t) - 238 - \frac{54}{t}, T \quad (^\circ\mathrm{F}) \end{aligned} \tag{9.55}$$

Table 9.6a. Steel columns, heated perimeter and fire resistance.

Type	Heated perimeter fully protected box type	Fire resistance R
(1) Low density box protection	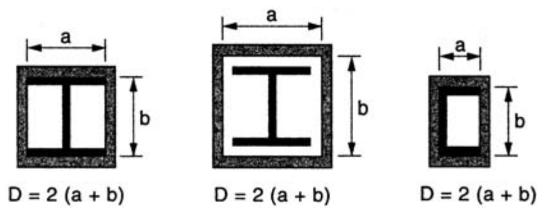	(1) $R = (C_1(W/D) + C_2)h$
(2) Density range $20 < \rho \leq 50\,\text{lb/ft}^3$ $320 \leq \rho \leq 800\,\text{kg}^3/\text{m}^3$ (2a) As above in (2)	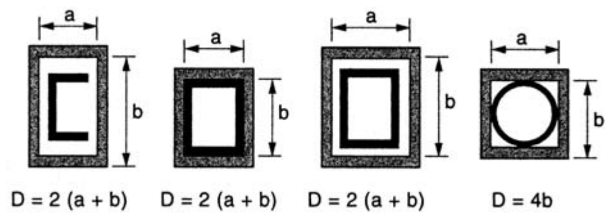	(2) $R = (1200(W/D_p) + 30)h$ Chemically stable materials such as vermiculite, perlite, sprayed mineral fibres and dense mineral wool (2a) Cement paste, gypsum, cementitious mixtures and plasters
(3) Density range as above in (2)	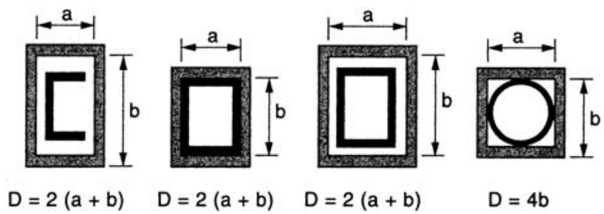	(3) $R = (1200(W/D_p) + 72)h$ Pastes or gypsum such as cementitious mixture and plasters

* C_1, C_2 = material constants; W = weight of steel column lb/ft (kg/m); D = heated perimeter inches (mm or m); h = thickness of protection in (mm or m).

Table 9.6b. Steel columns, heated perimeter and fire resistance.

Type	Heated perimeters fully protected; contour protection	For resistance, R
(4) Density $10 \leq \rho \leq 20$ lb/ft^3 $160 \leq \rho \leq 320$ kg/m^3	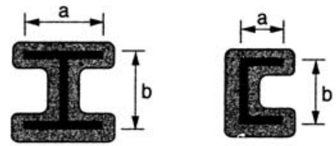 D = 4a + 2b D = 4a + 2b	(4) $R = (45(W/D) + 30)h$ Small round and square columns (width < 6 in. (152 mm)) $h \leq 1.5$ in. (35 mm)
(5) As in (4)	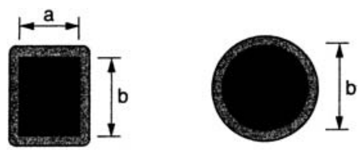 D = 2 (a + b) D = 3.14b	(5) $R = (60(W/D) + 30)h$ All other shapes, sizes and thickness of protection
(6) Gypsum wall board AISI 1980	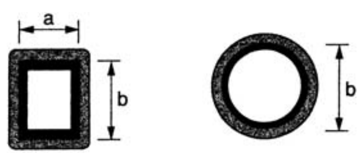 D = 2 (a + b) D = 3.14b	(6) $R = (130(hW'/2D))^{0.75}$ $W' = W + 50(hD/144)$

Note: All parameters as before. W' = weight of steel column with gypsum wall board protection (lb/ft or kg/m).

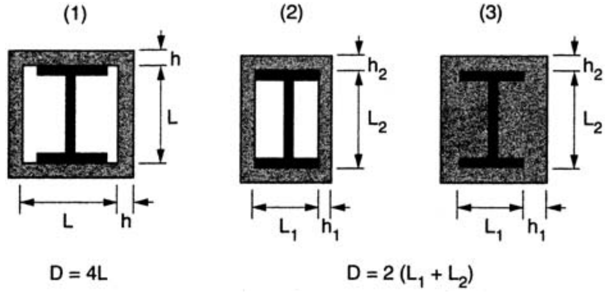

Figure 9.17. Concrete-protected structural steel columns. (1) square shape protection with a uniform thickness of concrete cover on all sides; (2) rectangular shape with varying thickness of concrete cover and (3) encasement having all re-entrant spaces filled with concrete.

(c) *steel columns.*
In steel columns' the temperature due to fire is still a function of W/D, weight-to-heated-perimeter ratio. Hence, to avoid rapid loss of strength in a column it is necessary to insulate it. Similar to beam sections, the heated perimeter D of some steel columns is shown in Table 9.6a and 9.6b along with their fire resistance formulae. Concrete encasement is another form of protection for steel columns. Lie and Harmathy (210, 287) have developed methods of protection. Figure 9.17 gives three cases for which the following equation are given for both normal and lightweight concrete.

(a) Normal concrete protection on all sides. The resistance R is given as:

$$R = 11\left(\frac{W}{D}\right)^{0.7} + 19h^{1.6}\left\{1 + 94\left[\frac{H}{\rho_c h(L+h)}\right]^{0.8}\right\} \tag{9.56}$$

(b) Lightweight concrete protection on all sides. The resistance R is given as:

$$R = 11\left(\frac{W}{D}\right)^{0.7} + 23h^{1.6}\left\{1 + 94\left[\frac{H'}{\rho_c h(L+h)}\right]^{0.8}\right\} \tag{9.57}$$

All notation have been defined previously except
H' = thermal capacity of steel column at ambient temperature (0.11 W Btu/(ft·°F))
ρ_c = concrete density (lb/ft^3 or kN/m^3).

9.4.4.3 *Additional methods of protection for hollow columns*
There are two types of hollow column protection arrangements, as follows.

(a) Filling the hollow columns and carrying a share of the load at room temperature. Concrete acts as a heat sink and takes more load as steel strength is reduced.
(b) Filling the hollow columns with water. Water inside absorbs the heat transferred from the fire to the column. The heat is dissipated by evaporation of the water. Flemington (272) and Miller and Iff (295) have done research on the quantity of water necessary to prevent excessive temperature rise of steel. The quantity of external storage water required to achieve fire resistance is given by

$$V_W = 3.92 \cdot A \cdot q \cdot 10^{-7} \tag{9.58}$$

where
V_W = required external storage water (m^3)
A = surface area of the column (m^2)

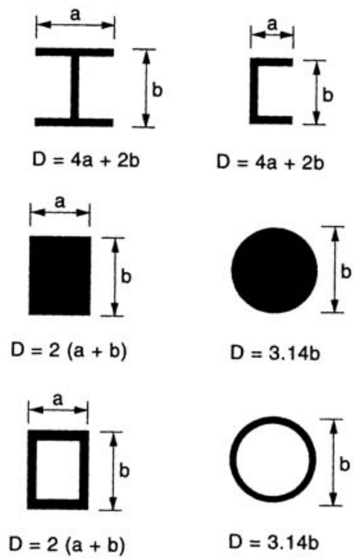

Figure 9.18. Section of unprotected steel columns.

$\bar{q}$ = heat transferred to the column during a fire test per unit surface area (kJ/m^2)
= 150740 for ¾ hour fir rating
= 225260 for 1 hour fire rating
= 580960 for 2 hour fire rating
= 785460 for 3 hour fire rating
= 1014460 for 4 hour fire rating

Column-water interaction

A comprehensive finite element analysis is required for the heat transfer to water while interacting with columns in the fire environment. Appendix I gives a guidance in this direction.

Unprotected steel columns

Figure 9.18 shows data on unprotected steel shapes used in this section. The AISC (263–267) gives the following formulae for the fire resistance of unprotected steel columns:

$$R = 10.3\left(\frac{W}{D}\right)^{0.7} \quad \text{for } W/D < 10 \tag{9.59}$$

$$R = 8.3\left(\frac{W}{D}\right)^{0.8} \quad \text{for } W/D \geq 10 \tag{9.60}$$

R = resistance in minutes
W = weight of steel column per ft length
D = heated perimeter of steel section (in.)
The values of D are given in Table 9.7 and Fig. 9.18.

9.4.4.4 *Summary of empirical equations for steel columns fully protected against fire (USA)*

Table 9.7 provides a summary of the empirical equations of columns when they are protected by various insulations. In each case the resistance R is given.

Table 9.7. Empirical equations for protected columns.

Protection	Empirical equation	Protection	Empirical equation
Column/unprotected	$R = 10.3(W/D)^{0.7}$, for $W/D < 10$ (for critical temperature of 100°F)	Column/spray-applied materials and board products – wide-flange shapes	$R = [C_1(W/D) + C_2]h$
	R = fire endurance time (min) W = weight of steel section per linear foot (lb/ft) D = heated perimeter (in.)		C_1 and C_2 = constants for specific protection material
Column/gypsum wallboard	$R = 130\left(\dfrac{hW/D}{2}\right)^{0.75}$	Column/concrete cover	$R = R_0(1 + 0.03m)$
	where		where
	$W' = W + \left(\dfrac{50hD}{144}\right)$		$R_0 = 10(W/D)^{0.7} + 17\left(\dfrac{h^{1.6}}{k_c^{0.2}}\right)$
	h = thickness of protection (in.)		
	W' = weight of steel section and gypsum wallboard (lb/ft)		$\cdot\left\{1 + 26\left[\dfrac{H}{\rho_c C_c h(L+h)}\right]^{0.8}\right\}$

Column/spray-applied materials and board products – hollow	$R = C_1(A/P)h + C_2$ C_1 and C_2 = constants for specific protection material The A/P ratio of a circular pipe is determined by: A/P pipe $= (t(d - t)/d)$ where d = outer diameter of the pipe (in) t = wall thickness of the pipe (in) The A/P ratio of a rectangular or square tube is determined by: $A/P \text{ tube} = \dfrac{t(a+b-2f)}{a+b}$ where a = outer width of the tube (in) b = outer length of the tube (in) t = wall thickness of the tube (in)		$D = 2(b_f + d)$ R_0 = fire endurance at zero moisture content of concrete (min) m = equilibrium moisture content of concrete (% by volume) b_f = width of flange (in) d = depth of section (in) k_c = thermal conductivity of concrete temp. (Btu/(hr · ft · °F))
		Column/concrete encased	For concrete-encased columns use: $H = 0.11W + \rho_c C_c/144(b_f d - A_s)$ $D = 2(B_r + d)$ $L = (b_f + d)/2$ H = thermal capacity of steel section at ambient temp. $= 0.11W$ (Btu/(ft · °F)) C_c = specific heat of concrete at ambient temp. (Btu/(lb · °F)) L = inside dimension of one side of *square* concrete box protection (in) A_s = cross-sectional area of steel column (in^2)

9.4.4.5 *Examples in steel structures*
Example 9.1
American practice. A wide-flange WF 24 × 76 steel beam with 1 in (25.4 mm) of spray-applied cementitious material (British equivalent 610 × 229 × 113 kg/m). The beam has $W/D = 1.03$ lb/ft and nowhere does the temperature exceed 1000°F. (538°C) or 811 K. The insulation temperature is to be 750°F while keeping the steel temperature at 538°C. The results obtained from

(a) Malhotra's quasi-steady state approach
(b) Jeanes' graph
(c) Lie's graph

are compared. To calculate the fire resistance R for the spray-applied beam, the following data are used:

	Steel	Insulation
K (Btu/ft · hr · °F)	25.6	0.067
C_p (Btu/lb · °F)	0.133	0.305
γ (density/ft^3)	480	14.9

(a) ***Malhotra's method (113, 215)***

$$c_s W/D > 2 c_i \rho_i d$$

$$00.133 \times \frac{1.03}{1/12} > 2 \times 0.305 \times 14.9 \times \frac{1.0}{12}$$

$$1.644 > 0.757.$$

The thermal capacity of insulation is therefore neglected. The steel temperature rise for each time step is:

$$\Delta T_s = \frac{0.067/3600}{10.132 \times \frac{1.0}{12} \times \frac{1.03}{1/12}} (T_f - T_s)\Delta t$$

$$= 1.37 \times 10^{-4} (T_f - T_s)\Delta t$$

$$\Delta t(\max) = 15.9 \frac{W}{D} = 15.9 \times \frac{1.03}{1/12} \approx 195\,\text{sec}$$

One hour allowable time is prescribed by various codes for fire resistance. At T_0 the room temperature is around 21°C(70°F). The time step is chosen to be 3 min.

The results are as follows:

Time (min)	$(T_f - T_s)$°F	ΔT_s (°F)	ΔT_s (°F)
0			70
3	690	18.53	*88.53
6	937	25.16	113.69
⋮	⋮	⋮	⋮
185	764	39	1000

The fire endurance is 106 min.
(Note: to convert to °C, use $°C = \frac{°F - 32}{1.8}$ for all values.)

(b) ***Jeane's graph***
$W/D = 1.03$ lb/ft. In with an insulation thickness of 1 in. The fire endurance is estimated to be 2 hr or 120 min.

(c) ***Lie's graph***
Figures and equation are used.

Dimensionless parameters

$$F_0 = \frac{\alpha t}{h^2} \quad \alpha = \frac{K}{\rho_i c_i} = \frac{0.067}{14.9 \times 0.305} = 0.0147\,\text{ft}^2/\text{hr}$$

$$= \frac{0.0147\,t}{(1/12)^2} = 2.12t\ (t \text{ in hours})$$

$$N = \frac{\rho_i c_i h}{c_s(W/D)} = \frac{14.9 \times 0.305 \times (1/12)}{0.133(1.03/(1/12))} = 0.2304$$

Adopting a trial and error method with a critical temperature of 1000°F, the fire endurance time is 115 min.

Jeane's and Lie's approaches are in close agreement. Malhotra's method is methodical and the small difference may be attributed to the equations being dependent on one-dimensional heat transfer.

Example 9.2

British practice. Calculate the time or duration for a beam of 457 × 152 × 60 kg/m fully protected by 25 mm sprayed fibre insulation for a temperature rise in steel of 270°C. Use the following data and the relevant European Codes including the Eurocode 3 and the ISO formula for the furnace temperature T_f.

Steel:

$A_s = 75.8\,\text{cm}^2$
$\rho_s = 7850\,\text{kg/m}^3$
p_s or $D = 1.254\,\text{m}$
$\bar{c}_s = 520\,\text{J/Kg °C}$

Insulation:

$d_i = 0.025\,\text{m}$
$k_i = 0.11\,\text{W/m°C}$
$c_i = 1050\,\text{J/kg°C}$
$\rho_i = 300\,\text{kg/m}^3$

ISO formula for furnace temperature T_f:

$$T_f = 345\log_{10}(8t+1) + T_0$$

$$\Delta t \not> \frac{2500}{(P_s \text{ or } D)/A_s}$$

$$T_0 = \text{initial temperature} = \text{ambient temperature} = 20°\text{C}$$

$$\frac{P_d}{A_s} = \frac{1.254}{75.8 \times 10^{-4}} = 16.5\,\text{m}$$

$$\Delta t = \frac{25\,000}{1.254/75.8 \times 10^{-4}} = 152\,\text{sec} = 2.5\,\text{min}$$

$$c_s\rho_s A_s = 520 \times 7850 \times 75.8 \times 10^{-4} = 30\,942$$

$$2c_i\rho_i d_i P_i = 2 \times 1050 \times 300 \times 0.025 \times 1.254 = 19\,750$$

30 942 > 19 750: the insulation has a low heat capacity.

$$\Delta T_s = \frac{165 \times 2.5 \times 60}{520 \times 7850}(T_f - T_s) \times \frac{0.11}{0.025} = 0.027(T_f - T_s)$$

$$T_f = 345\log_{10}(8t+1) + T_0.$$

Table 9.8 shows a step-by-step calculation. It can be seen that, for a value of 270°C, the duration is around 150 minutes or 2½ hours.

Table 9.8. Step-by-step calculation.

t (min)	T_f (°C)	$T_f - T_s$ (°C)	ΔT_s (°C)	T_s (°C)
0 ⟵				⟶ 20
$\frac{2.5}{2} = 1.25$		359	9.70	29.70
2.5	486	486.3	12.32	42.02
5.0	598.43	556.41	15.02	57.04
7.5	672.98	615.94	16.63	73.67
10.0	732.1	658.43	17.78	
20.0	852.8	761.35	20.56	91.45
30.0	913.25	821.8	22.20	113.65
40.0	978.4	864.75	23.35	137
60.0	1062.34	925.34	25.00	162
90.0	1148.00	986.00	26.62	188.62
95.0	1182.72	994.10	26.84	215.46
100.0	1217.46	1002.00	27.05	242.51
150	1305.01	1062.5	28.70	271.21

Example 9.3

American practice. A steel column is protected by 1 in thick (25.4 mm) spray-applied cementitious material. Using the American practice and the following data, determine the fire resistance R for the column:

$$C_1 = 63 \quad C_2 = 36 \quad \frac{W}{D} = 1.45\,\text{lb/ft·in.}$$

Protection: contour profile type

$$\begin{aligned} R &= \left(63\frac{W}{D} + 36\right) h \\ &= (63 \times 1.44 + 36) \times 1 \\ &= 126.72\,\text{min} \approx 2\,\text{hr}. \end{aligned}$$

Example 9.4

American practice. A column W8 × 28 is encased in a normal concrete with all spaces duly filled in. Using the American practice and the following data, determine the fire resistance time for the column.

ASTM DATA

$$h_2 = h_1 = h = 1.5\,\text{in.}; B_f = 6.535\,\text{in.}; d = 8.060\,\text{in.}$$
$$w/D = 0.67l/(ft.in.)$$

Protection: Contour profile type

$$A = 8.25\,\text{in.}$$

thermal property of concrete at 70 F°(21°)

	Normal concrete	Lightweight concrete
K(Btu/(ft.F°.hr))	0.95	0.35
$c_p = c_c$(Btu/(lb.F°))	0.20	0.20

$$d_c = \text{density of concrete} = 100\,\text{lb/ft}^3 \rightarrow \text{lightweight concrete}$$
$$= 150\,\text{lb/ft}^3 \rightarrow \text{Normal concrete}$$

concrete cover = 1.5 in.
moisture content in both concrete = 5%
Lightweight column i.e. using lightweight concrete, the protection time shall be calculated as:

$$R = R_0(1 + 0.3)\,\text{m with m} = 5\%$$
$$= 1.15R_0 \text{ for both concrete}$$
$$R_0 = 10(W/D)^{0.7} + 17(h^{1.6}/K_C^{0.2})\left\{1 + 26\left[\frac{H}{d_c c_c h(L+h)}\right]^{0.8}\right\}$$
$$h = 15, H = 0.11\,\text{W} + \frac{d_c c_c}{144}(B_f D - A_s$$
$$= 0.1(28) + \frac{d_c(0.2)}{144}(6.535(8.06 - 8.25))$$
$$\text{for } d_c = 100\,\text{lb/ft}^2 \quad H(\text{lightweight}) = 9.25$$
$$\text{for } d_c = 150\,\text{lb/ft}^2 \quad H(\text{Normal}) = 10.484$$
$$L = \tfrac{1}{2}(B_f + d) = 7.30\,\text{in. (185 mm)}$$

Hence

$$R_0(\text{lightweight concrete}) = 119 \text{ minutes}$$
$$R_0(\text{normal concrete}) = 87 \text{ minutes}$$
$$R = 1.15R_0 = 1.15 \times 119 = 137 \text{ minutes} \leftarrow \text{Lightweight, concrete column}$$
$$R = 1.15R_0 = 1.15 \times 87 = 100 \text{ minutes} \leftarrow \text{Normal concrete column}$$

Adopting Lightweight concrete 1.5 inches thick for insulation, the duration time R is 1.37 times more than for the normal concrete.

Example 9.5
British practice. A steel column 254 × 254 × 167 kg/m is fully exposed to temperature changes. Using the following data and the relevant. Eurocode 3, calculate a step-by-step temperature rise and evaluate the final collapse of this column:

$$A_s = 212\,\text{cm}^2$$
$$D \text{ or } P_s = 1.636\,\text{m}$$
$$\text{ambient temperature} = 20°\text{C}$$
$$\text{gas temperature } T_f = 345\log_{10}(0.133t + 1) + T_0$$
$$t = \text{time (min)}$$
$$T_0 = \text{initial temperature (°C)}$$
$$\alpha = \alpha_c + \alpha_r$$
$$\alpha_c = 25\,\text{W/(m}^2\cdot°\text{C)}$$
$$\alpha_r = \frac{5.75\,w_r}{(T_f - T_s)} \times \left[\left(\frac{T_f + 273}{100}\right)^4 - \left(\frac{T_s + 273}{100}\right)^4\right]\text{W/(m}^2\cdot°\text{C)}$$

Steel properties:

$$C + s = 520\,\text{J/(kg}\cdot{}^{\circ}\text{C)}$$
$$\rho_s = 7850\,\text{kg/m}^3$$
$$\Delta t \not> \frac{25\,000}{P_s \text{ or } D/AS}$$
$$T_s = \text{steel temperature rise at time } t^{\circ}\text{C}$$
$$w_r = \text{average emissivity} = 0.5.$$

Example 9.6
European practice. Determine the sprayed plaster protection to a unival beam Grade S355JR 406 × 178 × 74 kg/m UB for a 90-minute fire duration. Use the following data:
Beam span = 9 m
Bending moments from each simple end at 3 m are 236 and 184 kNm respectively
Partial safety factors 1.0 and 0.8 permanent (dead) load action and live load respectively.

$$\text{concentrated}\begin{cases}\text{load on one side} & \begin{array}{l}\text{dead load 40 kN}\\ \text{imposed load 70 kN}\end{array}\\ \text{load on other side} & \begin{array}{l}\text{dead load 40 kN}\\ \text{imposed load 70 kN}\end{array}\end{cases}$$

$$\text{gypsum plaster } p_p = 800\,\text{kg/m}^3 \quad \lambda_p = 0.2\,\text{W/(m}\cdot{}^{\circ}\text{C)}$$
$$p = 20\%$$

$$R = \text{load ratio} = \frac{M_{fi}}{M_c} \le \frac{mM_{fi}}{M_b}$$
$$\frac{236}{532.5} = 0.443 \le \frac{0.89 \times 236}{378}$$

θ_{lim} (Eurocode 3) = 633°C

$$I_f = \left\{\frac{t_{fi,d}}{40(\theta_{lim} - Ap/Vi = 140/m)}\right\}^{1.3} = 9.06 \times 10^{-4}$$

$$\rho'_p = \text{effective density}$$
$$= \rho_p(1 + 0.03p) = 1280\,\text{kg/m}^3$$
$$\mu = \lambda_p\left(\frac{\rho'_p}{\rho_a}\right) I_f \left(\frac{Ap}{Vi}\right)^2$$
$$= 0.20\left(\frac{1280}{7850}\right) 9.06 \times 10^{-4}(140)^2$$
$$= 0.579$$

$$\mu_{(0)} = \frac{S_{\mathrm{d,f}}}{R_{\mathrm{d,F}}} = \frac{KS_{\mathrm{d,f}}}{R_{\mathrm{d,F}}}$$

$$\mu_{(0)} = 0.7 \times 0.556 = 0.389$$

$$\theta_{\mathrm{a,cr}} = 78.38 \ln \left\{ \left(\frac{1}{0.967(\mu_0)^{3.833}} - 1 \right)^{1/2} \right\} + 482$$

$$= 624°\mathrm{C}.$$

For a 90-minute fire duration, temperate = 607°C and the spray thickness should be 12 mm.
Check

$$F_{\mathrm{w}} = \frac{(1+4\mu)^{1/2} - 1}{2\mu} = \frac{(1 + 4 \times 0.389)^{1/2} - 1}{2 \times 0.389} = 0.76$$

$$\begin{aligned} d_{\mathrm{P}} &= \text{thickness (m)} \\ &= \lambda_{\mathrm{p}} I_{\mathrm{f}} F_{\mathrm{w}} \left(\frac{AP}{Vi} \right) \\ &= 0.2 \times 9.06 \times 10^{-4} \times 0.76(140) \\ &= 0.0193\,\mathrm{m} \\ &= 19.3\,\mathrm{mm}. \end{aligned}$$

Adopt 21 mm as proposed.

REFERENCES/BIBLIOGRAPHY

1. Merrett Cyriax Associates, *The role of structural fire protection*. Cement and Concrete Association, London, November 1969, p. 140.
2. *Money to burn?* Cement and Concrete Association, London. Leaflet Bpe. I, April 1970, p. 4.
3. Taylor, H. D., *Structural fire protection. Proceedings of the Third National Fire Protection Conference*. Fire Protection Association, London, 1968, pp. 76–82.
4. *Fire Prevention Design Guide*: No. 4 in the series ‘Planning for fire safety in buildings’. Fire Protection Association, London. EPA planning programme. *FPA Journal No. 86*, April 1970, pp. 27–38.
5. *Report of the Departmental Committee on the Fire Service* (Chairman: Sir Ronald Holroyd). HMSO, London, May 1970, Cmnd. 4371, pp. 228.
6. Fire losses for 1969 top £120 million. *FPA Journal No. 86*, April 1970, p. 4.
7. Spread of fire in buildings — some statistical studies. *JoFRO* (Joint Fire Research Organization Quarterly). Winter 1968, p. 6.
   Lee, P. G., Contribution to the discussion of Smith, W. J. Fire protection of industrial buildings. *Journal of the Royal Society of Arts*. January 1971, p. 102.
8. Silock, A., *Protecting buildings against fire* — background to costs. The Architect’s Journal Information Library, 13 December 1967.
9. Srother-Smith, N. C., Code of precautions for industry, *The Times*. Monday 2 June 1969. Fire Protection supplement, p. 1. Contributor to the discussion at the National IFPA/BFSA Conference, 18 November 1970, London. Advertisements for Colt Heating and Ventilation.
10. *A hot three hundred million*. The AFA Group, London. (See also *The Engineer*, 18 September 1969, p. 9.)
11. SASCO bounce back. *New Electronics*, 19 August, 1969, p. 17.
12. SASCO are back together again. *SASCO Electronic News*, Vol. 4, September 1969, p. 1.
13. *FPA Journal* No. 86, April 1970, pp. 39–52.
14. Doublet, A. R., Promotion of fire protection by insurers. *Proceedings of the Third National Fire Prevention Conference*. Fire Protection Association, London, 1968, pp. 14, 15.
15. *Fire reinsurance — some solutions*. The Mercantile and General Reinsurance Company Limited, August 1970, p. 8.

16. Lawson, D. I., *Fire research in the United Kingdom. Second National conference on Fire*. Australian Fire Protection Association, August 1968 (see also *Institution of Fire Engineers Quarterly*). Also Fry, J. F. and Eveleigh, C. The behaviour of automatic fire detection systems. Fire Research Stations, F. R. Note 810/1970.
17. Sprinkler system shut down for maintenance: £2½ million fire. *FPA Journal No. 86*, pp. 45 and 46.
18. The fire at Amaljeverket. *Teknisk Ukeblad.* Vol. 115, No. 42, November 1968, pp. 998–1000. (Translation available from National Translation Center.)
19. Planning guide to fire safety when you have outside contractors in *FPA Journal No. 89*, December 1970, pp. 211–218.
20. Early collapse of unprotected steel roof trusses at paper products warehouse. *Fire*, June 1969, p. 40.
21. The behaviour of steel in fire — what is the significance of the British Standard 476 furnace test? *JoFRO* (Joint Fire Research Organization Quarterly), Autumn 1968, pp. 2–5.
22. Forrest, J. C. M. A warehouse to resist fire. *Concrete* Vol. 3, No. 8, August 1969, pp. 315–323.
23. Linblad, A., Pettersson, O., Schmidt, B. and Odeen, K., Fire in Warehouse No. 6 in the Free Port of Stockholm. *ICE Monthly*, July 1969, pp. 326–336.
24. *The Reinstatement of Co-operative House.* Simons Construction Group Ltd, October 1970, p. 12.
25. Report of a meeting on 'The reinstatement of concrete construction after a fire'. *Concrete* Vol. 5, No. 4, April 1971, pp. 115–117.
26. Effect of fire on Glasgow store. *Civil Engineering and Public Works Review* Vol. 60, No. 710, September 1965, pp. 1287, 1289.
27. Facaoaru, I., Non-destructive testing of concrete in Romania. Symposium on non-destructive testing of concrete and timber, 11–12 June 1969. *Institution of Civil Engineers*, Paper No. 4, pp. 23–33.
28. Somerville, G., *Load tests on Smallbrook Ringway Bridge, Birmingham*. Cement and Concrete Association, July 1969, Technical Report TRA 422.
29. Williamson, T. G., In *Evaluation, Maintenance, and Upgrading of Wood Structures*. American Society of Civil Engineers, New York, 1982.
30. Do, M. H. and Springer, G. S., *J. of Fire Sci.*, 1, 1983, p. 271.
31. Do, M. H. and Springer, G. S., *J. of Fire Sci.*, 1, 1983, p. 285.
32. Do, M. H. and Springer, G. S., *J. of Fire Sci.*, 1, 1983, p. 297.
33. DCA No. 2, *Design of Fire-Resistive Exposed Wood Members*. American Forest & Paper Association, Washington, DC, 1985.
34. American Institute of Timber Construction, *Timber Construction Manual. John* Wiley and Sons, New York, 1985.
35. Carling, O., *Study Report No. 18.* Building Research Association of New Zealand, Judgeford, 1989.
36. *Wood Handbook: Wood as an Engineering Material* (*USDA Agr. Hdbk. No. 72)*. Superintendent of Documents, Washington, DC, 1987.
37. Gerhards, C. C., *Wood and Fiber*, 14, 1982, p. 4.
38. Beall, F. C., In *Structural Use of Wood in Adverse Environments*. Van Nostrand Reinhold, New York, 1982.
39. Ostman, B. A.-L., *Wood Sci. Tech.*, 19, 1985, p. 103.
40. Ragland, K. W., Aerts, D. J. and Baker, A. J., *Bioresource Technology*, 37, 1991, p. 161.
41. ASTM E-119-88, *Standard Test Methods for Fire Tests of Building Construction and Materials*. American Society for Testing and Materials, Philadelphia, 1988.
42. Bletzacker, R. W., *Effect of Structural Restraint on the Fire Resistance of Protected Steel Beam Floor and Roof Assemblies*. Ohio State Univ., Columbus, 1966.
43. Boring, D., Spence, J. and Wells, W., Fire *Protection Through Modern Building Codes*. American Iron and Steel Institute, Washington, DC, 1981.
44. Jeanes, D. C., *Technical Report 84-1.* Society of Fire Protection Engineers, Boston, 1984.
45. Abrams, M. S., *ASTM STP 685*. American Society for Testing and Materials, Philadelphia, 1979.
46. Harmarthy, T. Z., *NRCC 20956 (DBR Paper No. 1080)*. National Research Council of Canada, Ottawa, 1983.
47. Lie, T. T., *Fire and Buildings*. Applied Science, London, 1972.
48. Lie, T. T. and Stanzak, W. W., *Eng. J.*, 57, 1974, pp. 5/6.
49. Boring, D. F., *An Analytical Evaluation of the Structural Response of Simply Supported. Thermally Unrestrained Structural Steel Beams Exposed to the Standard Fire Endurance Test*, Master's Thesis, Ohio State University, Columbus, 1979.
50. Lindberg, R. A., *Processes and Materials of Manufacture.* Allyn and Bacon, Inc., Boston, 1978, p. 46.

51. Jeanes, D. C., *Methods of Calculating Fire Resistance of Steel Structures*, Engineering Applications of Fire Technology Workshop, SFPE, Boston, 1980.
52. Malhotra, H. L., *Design of Fire-Resisting Structures*. Chapman and Hall, 1982.
53. Harmathy, T. Z., *ASME J. of Basic Eng*., 1967, p. 89.
54. Harmathy, T. Z., *ASTM STP 422*. American Society for Testing and Materials, Philadelphia, 1967.
55. *Fire Resistant Steel Frame Construction*. American Iron and Steel Institute, Washington, DC, 1974.
56. *Designing Fire Protection for Steel Columns.* American Iron and Steel Institute, Washington, DC, 1980.
57. Stanzak, W. W. and Lie, T. T., *Fire Tests on Protected Steel Columns with Different Cross-Sections*. National Research Council of Canada, Ottawa, 1973.
58. PABCO, *Pabco Super Firetemp Fireproofing Board Fire Protection Guide*, PABCO, Ruston, LA, 1984.
59. Seigel, L. G., *Fire Tech*., 1970, p. 6.
60. Seigel, L. G., *Matls. Res. and Standards*, February 1970, p. 4.
61. Standard Building Code Congress, *South Standard Building Code*, SSBC, Birmingham, 1985.
62. Lie, T. T. and Stanzak, W. W., *Eng. J. Am. Inst. Steel Const.*, 34d Qtr., 1973.
63. *Designing Fire Protection for Steel Beams*. American Iron and Steel Institute, Washington, DC, 1985.
64. *Manual of Steel Construction*. American Institute of Steel Construction, New York, 1981.
65. *Fire Resistance Directory*. Underwriters Laboratories, Northbrook, 1994.
66. *Designing Fire Protection for Steel Trusses*. American Iron and Steel Institute, Washington, DC, 1980.
67. *Fire Resistance Design Manual*. Gypsum Association, Evanston, 1984.
68. Stanzak, W. W., *Technical Trans. 1425.* National Research Council of Canada, Ottawa, 1971.
69. Stanzak, W. W., and Harmathy, T. Z., *Fire Tech*., 4, 1968, p. 4.
70. Pettersson, O., Magnusson, S. and Thor, J., *Bulletin* 52, Lund Institute of Technology, Lund, Sweden, 1976.
71. *Fire-Safe Structural Steel. A Design Guide*. American Iron and Steel Institute, Washington, DC, 1979.
72. Law, M., *AISC Eng. J*., 2nd Qtr., 1978.
73. Bond, G. V. L., *Fire and Steel Construction — Water Cooled Hollow Columns*. Constrado, 1974.
74. Lie, T. T. and Harmathy, T. Z., *Fire Study No. 28*. National Research Council of Canada, Ottawa, 1972.
75. Zienkewicz, O. C., *The Finite Element Method.* McGraw-Hill, New York, 1983.
76. Paulsson, M., *TASEF*-2, Lund Institute of Technology, Lund, Sweden, 1983.
77. Iding, R. H., Nizamuddin, Z. and Bresler, B., *UCB FRB 77-15*. University of California, Berkeley, 1977.
78. Anderberg, A., *PC-TEMPCALC*. Institutet for Brandteknisks Fragor, Sweden, 1985.
79. Milke, J. A., *Estimating Fire Resistance of Tubular Steel Columns*, Proceedings of Symposium on Hollow Structural Sections in Building Construction. ASCE, Chicago, 1985.
80. Bardell, K., *ASTM STP 826*. American Society for Testing and Materials, Philadelphia, 1983.
81. Gross, D., *NBSIR 85-3223*. National Bureau of Standards, Gaithersburg, 1985.
82. Robertson, A. F. and Ryan, J. V., *J. of Res*., 63C, 1959, p. 2.
83. Vinnakota, S., *Calculation of the Fire Resistance of Structural Steel Members.* ASCE Spring Meeting, 1978.
84. Kruppa, J., *J of Struc. Div., ASCE*, 1979, p. 105.
85. European Convention for Constructional Steelwork, Technical Committee 3, *European Recommendations for the Fire Safety of Steel Structures*. Elsevier, Amsterdam, 1983.
86. Lie, T. T. and Stanzak, W. W., *AISC Eng. J*., 13, 1976, p. 2.
87. Chajes, A., *Principles of Structural Stability Theory*. Prentice-Hall, Englewood Cliffs, NJ, 1974.
88. Jeanes, D. C., *F. Safety J*., 9, 1985, p. 1.
89. NFPA 251, *Standard Methods of Fire Tests of Building Construction and Materials*. National Fire Protection Association, Quincy, 1990.
90. UL 263, *Fire Tests of Building Construction and Materials*. Underwriters Laboratories, Northbrook, 1992.
91. *Specification for the Design, Fabrication, and Erection of Structural Steel for Buildings*. American Institute of Steel Construction, New York, 1978.
92. Lie, T. T. (ed.), *Structural Fire Protection*. American Society of Civil Engineers, New York, 1992.
93. *International Fire Engineering Design for Steel Structures: State of the Art.* International Iron and Steel Institute, Brussels, 1993.
94. Gamble, W. L., Predicting Protected Steel Member Fire Endurance Using Spreadsheet Programs, *Fire Technology*, 25, 3, 1989, pp. 256–273.

95. Stubblefield, R. and Edwards, M. L., NODES-T3: Making FIRES-T3 a Little Easier, Department of Fire Protection Engineering, University of Maryland, College Park, 1991 (unpublished).
96. Tomecek, D. V. and Milke, J. A., A Study of the Effect of Partial Loss of Protection on the Fire Resistance of Steel Columns, *Fire Technology*, 29, 1, 1993, pp. 3–21.
97. *Supplement to the National Building Code of Canada*, National Research Council of Canada, Ottawa, 1990.
98. *DCA No. 4: Component Additive Method (CAM) for Calculating and Demonstrating Assembly Fire Endurance*. American Forest & Paper Association, Washington, DC, 1991.
99. *Wood and Fire Safety*. Canadian Wood Council, Ottawa, 1991.
100. White, R. H., in *ASTM STP 826*. American Society for Testing and Materials, Philadelphia, 1983.
101. Richardson, L. R. and Cornelissen, A. A., *Fire and Materials*, 11, 1987, p. 191.
102. White, R. H., *J. of Test. and Eval.*, 14, 1986, p. 97.
103. *Fire Resistance of Wood Structures*. Technical Research Centre of Finland, Helsinki, 1980.
104. Gardner, W. D. and Syme, D. R., *Technical Report No. 5.* N.S.W. Timber Advisory Council Ltd., Sydney, 1991.
105. Fung, F. C. W., *NBSIR 77-1260*. National Bureau of Standards, Washington, DC, 1977.
106. Gammon, B. W., *Reliability Analysis of Wood-Frame Wall Assemblies Exposed to Fire*, Dissertation, University of California, Berkeley, 1987.
107. Mehaffey, J. R. and Sultan, M. A., in *Proc. of First International Fire and Materials Conference*. Interscience Communications Ltd., London, 1992.
108. Browne, F. L., *Report No. 2136.* USDA Forest Service, Forest Product Lab., Madison, 1958.
109. Schaffer, E. L., *Research Note FPL-145*. USDA Forest Service, Forest Product Lab., Madison, 1966.
110. Hall, G. S., Saunders, R. G., Allcorn, R. T., Jackman, P. E., Hickey, M. W. and Fitt, R., *Fire Performance of Timber — A Literature Survey*. Timber Research and Development Association, High Wycombe, 1971.
111. Schaffer, E. L., *Wood and Fiber*, 9, 1977, p. 145.
112. Hadvig, S., *Charring of Wood in Building Fires*. Technical University of Denmark, Lyngby, 1981.
113. Malhotra, H. L., *Design of Fire-Resisting Structures*. Surrey University Press, London, 1982.
114. Schaffer, E. L., *Research Paper FPL 69*. USDA Forest Service, Forest Product Lab., Madison, 1967.
115. White, R. H., *Fire Technology*, 28, 1982, p. 5.
116. Lache, M., *Holz-Zentralblatt*, 117, 1991, p. 473.
117. Colier, P. C. R., *Study Report No. 42*. Building Research Association of New Zealand, Judgeford, 1992.
118. Kanury, A. M. and Holve, D. J., *NBS-GCR 76-50*. National Bureau of Standards, Washington, DC, 1975.
119. Noren, B. J. and Ostman, B. A.-L., in *Fire Safety Science — Proceedings of the First International Symposium*. Hemisphere, New York, 1986.
120. Kerksen-Bradley, M., In *Proc. of Oxford Fire Conference*. Timber Research and Development Association, High Wycombe, 1993.
121. Schaffer, E. L., *J. Fire and Flamm.*, 1, 1974, p. 96.
122. Tran, H. C. and White, R. H., *Fire and Materials*, 16, 1992, p. 197.
123. Mikkola, E., In *Fire Safety Science — Proceedings of the Third International Symposium*. Elsevier Applied Science, London, 1991.
124. Nussbaum, R. M., *J. Fire Sciences*, 6, 1988, p. 290.
125. Pettersson, O., Magnusson, S. E. and Thor, J., *Publication 50*. Swedish Institute of Steel Construction, Sweden, 1976.
126. Oleson, F. B. and Konig, J., *Report No. 19210061*. Swedish Institute for Wood Technology Research (Tratek), Stockholm, 1991.
127. Roberts, A. F., In *Thirteenth Symposium (Int.) on Combustion*. The Combustion Institute, Pittsburgh, 1971.
128. Bamford, C. H., Crank, J. and Malan, D. H., *Proc. of Camb. Phil. Soc.,* 46, 1946, p. 166.
129. Thomas, P. H., *Fire Research Note No. 446*. Fire Research Station, Borehamwood, UK, 1960.
130. Kung, H., *Combustion and Flame*, 18, 1972, p. 195.
131. Tamanini, F., In *Appendix A of Factory Mutual Research Corporation Report No. 21011.7*. Factory Mutual Research Corp., Norwood, 1976.
132. Atreya, A., *Pyrolysis: Ignition and Fire Spread on Horizontal Surfaces of Wood*, PhD Thesis, Harvard University, Cambridge, MA, 1983.

133. PARKER, W. J., In *Fire Safety Science — Proceedings of the Second International Symposium*. Hemisphere, New York, 1989.
134. HAVENS, J. A., *Thermal Decomposition of Wood*, Dissertation, University of Oklahoma (1969).
135. KNUDSON, R. M. and SCHNEIWIND, A. P., *Forest Prod. J.*, 25, 1975, 23.
136. KANSA, E. J., PERLEE, H. E. and CHAIKEN, R. F., *Comb. and Flame*, 29, 1977, 311.
137. HADVIG, S. and PAULSEN, O. R., *J. Fire and Flamm.*, 1, 1976, p. 433.
138. TINNEY, E. R., in *Tenth Symposium (Int.) on Combustion*. The Combustion Institute, Pittsburgh, 1965.
139. WHITE, R. H. and SCHAFFER, E. L., *Wood and Fiber*, 13, 1981, p. 7.
140. WHITE, R. H. and SCHAFFER, E. L., *Fire Tech.*, 14, 1978, p. 279.
141. FREDLUND, B., *Fire Safety J., 20*, 1993, p. 39.
142. SCHAFFER, E. L., MARX, C. M., BENDER, D. A. and WOESTE, F. E., *Research Paper FPL 467*. USDA Forest Service, Forest Product Lab., Madison, 1986.
143. NOREN, J., *Report 1 8810066*. Swedish Institute for Wood Technology (Tratek), Stockholm, 1988.
144. SCHAFFER, E. I., *Research Paper FPL 450*. USDA Forest Service, Forest Product Lab., Madison, 1984.
145. IMAIZUMI, C., *Norsk Skogind*, 16, 1962, p. 140.
146. LIE, T. T., *Can. J. of Civil Engg.*, 4 1977, p. 160.
147. ODEEN, K., In *Fire and Structural Use of Timber in Buildings*. HMSO, London, 1970.
148. FREDLUND, B., *Report No. 79-5*, Lund Institute of Technology, Lund, 1979.
149. MEYER-OTTENS, C., In *Three Decades of Structural Fire Safety*. Building Research Establishment, Fire Research Station, Borehamwood, UK, 1983.
150. PETTERSSON, O., In *Three Decades of Structural Fire Safety*. Building Research Establishment, Fire Research Station, Borehamwood, UK, 1983.
151. BARTHELEMY, B. and KRUPPA, J., *Resistance au Leu des Structures*. Editions Eyrolles, Paris, 1978.
152. KIRPICHENKOV, G. M. and ROMANENKOV, I. G., *NSBIR 80-2188*. National Bureau of Standards, Washington, DC, 1980.
153. ODEEN, K., *Fire Tech.*, 21, 1985, p. 34.
154. WOESTE, F. E. and SCHAFFER, E. L., *Fire and Matls.*, 3, 1979, p. 126.
155. WOESTE, F. E. and SCHAFFER, E. I., *Research Paper FPL 386.* USDA Forest Service, Forest Product Lab., Madison, 1981.
156. WHITE, R. H., SCHAFFER, E. L. and WOESTE, F. E., *Wood and Fiber*, 16, 1984, p. 374.
157. SCHAFFER, E. L., WHITE, R. H. and WOESTE, F. E., In *Proc. 1988 International Conference on Timber Engineering*. Forest Products Research Society, Madison, 1988.
158. WHITE, R. H., CRAMER, S. M. and SHRESTHA, D., *Research Paper FPL 522*. USDA, Forest Service, Forest Products Lab., Madison, 1993.
159. SCHAFFER, E. L. and WOESTE, F. E., In *Proceedings, Metal Plate Wood Truss Conference.* Forest Products Research Society, Madison, 1981.
160. KING, E. G. and GLOWINSKI, R. W., *Forest Prod. J.*, 38(10), 1988, p. 31.
161. BENDER, D. A., WOESTE, F. E., SHAFFER, E. L. and MARX, C. M., *Research Paper FPL 460.* USDA Forest Service, Forest Prod. Lab., Madison, 1985.
162. SCHAFFER, E. L., Structural fire design: wood. *U.S. Forest Service Research Paper FPL 450*, U.S. Dept. Agri., For. Prod. Lab., Madison, WI, 1984.
163. SCHAFFER, E. L., Effects of Pyrolytic Temperatures on the Longitudinal Strength of Dry Douglas-fir. *ASTM J. of Testing and Evaluation*, 1(4), 1973, pp. 319–329.
164. SCHAFFER, E. L., Influence of heat on the longitudinal creep of dry Douglas-fir. *Structural Use of Wood in Adverse Environments*, Robert W. Meyer, and Robert M. Kellogg, eds. Van Nostrand Reinhold Co., New York, NY, 1978.
165. SCHAFFER, E. L., State of structural timber fire endurance. *Wood and Fiber*, 1977.
166. TANG, W. K., Effect of inorganic salts on pyrolysis of wood, alpha-cellulose, and lignin determined by dynamic thermogravimetry. *U.S. Forest Service Research Paper FPL-71*, U.S. Dept. Agri., For. Prod. Lab., Madison, WI, 1967.
167. *USDA Agr. Hdbk. No. 72*. Wood handbook: Wood as an engineering material. Superintendent of Documents, Washington, DC, 1987.
168. US Federal Emergency Management Agency, *Multiprotection design manual*, Fire Section, TR 20, Part 3, Fire, Washington, DC, 1980,
169. ALLEN, D.E. and LIE, T. T., Further studies of the fire resistance of reinforced concrete columns. *NRCC 14047*, National Research Council of Canada, Division of Building Research, Ottawa, 1974.

170. American Society for Testing and Materials, *Standard methods of fire tests of building constructions and materials*, Designation E119-83, Phildelphia, PA, 1985.
171. Atreya, A., *Pyrolysis: ignition and fire spread on horizontal surfaces of wood*. **PhD Thesis**, Harvard University, Cambridge, MA, 1983.
172. Bender, D. A., Woeste, F. E. and Schaffer, E. L., Reliability formulation for the strength and fire endurance of glued-laminated beams. *Research Paper FPL 460*, U.S. Department of Agriculture, Forest Service, Forest Products Laboratory, Madison, WI, 1985.
173. Bresler, B. and Iding, R. H. J., Effect of fire exposure on steel frame buildings. (Computer Program FASBUS II), *Final Report, Vols. 1 and 2*, to American Iron and Steel Institute, Wiss, Janney, Elstner Associates, Inc., Emeryville, CA, 1982.
174. British Iron Steel Res. Assoc., *Physical constants of some commercial steels at elevated temperatures.* Butterworths, London, 1953.
175. Carling, O., Fire resistance of joint details in loadbearing timber construction – A literature survey. (Translated from the original Swedish by B. Harris and P. K. A. Yiu), *BRANZ Study Report SR 18*, Building Research Association of New Zealand, Judgeford, New Zealand, 1989.
176. CEC Research 7210-SA/502-REFAO/CAFIR. Computer assisted analysis of the fire resistance of steel and composite steel — Concrete Structures. (Computer Program CEFI-COSS), *Technical Reports RT1-6*, Luxembourg.
177. CTICM (Centre Technique Industriel de la Construction Métallique), Methode de prévision par le calcul du compartement au feu des structures en acier. (In French), D.T.U. (Document Technique Unifié), *Revue Construction Métallique*, No. 3, 1982.
178. Do, M. H. and Springer, G. S., Mass loss of and temperature distribution in southern pine and Douglas fir in the range 100 to 800°C. *J. of Fire Sci*., 1, 1983, pp. 271–284.
179. Do, M. H. and Springer, G. S., Model for predicting changes in the strength and moduli of timber exposed to elevated temperatures. *J. of Fire Sci*., 1, 1983, pp. 285–296.
180. Do, M. H. and Springer, G. S., Failure time of loaded wooden beams during fire. *J. of Fire Sci*., 1, 1983, pp. 297–303.
181. Dusinberre, G. M., *Heat transfer calculations by finite differences.* International Textbook Co., Scranton, PA, 1961.
182. Forsen, N. E., STEELFIRE — *Finite element program for non-linear analysis of steel frames exposed to fire.* Users Manual, Multiconsult A/S, Oslo, Norway, 1983
183. Fredlund, B., Structural design of fire exposed rectangular laminate wood beams with respect to lateral buckling. *Report No. 79-5*, Department of Structural Mechanics, Lund Institute of Technology, Lund, Sweden, 1979.
184. Fredlund, B., A model for heat and mass transfer in timber structure during fire. *Report LUTVDG/(TVBB-1003)*, Lund University, Department of Fire Safety Engineering, Lund, Sweden, 1988.
185. Fredlund, B., Calculation of fire resistance of wood based boards and wall construction. *Report SE-LUTVDG/(TVBB-3053)*, Lund University, Department of Fire Safety Engineering, Lund, Sweden, 1990.
186. Gammon, B. W., *Reliability analysis of wood frame wall assemblies in fir.* University of California, Berkeley, CA, 1987.
187. Groom, A. J., Modelling of heat transfer in composite structures at fir temperatures. *Proceedings of International Symposium on Fire Engineering Fire Building Structures and Safety*, Building Research Association of New Zealand (Reprints, No. 93), Judgeford, New Zealand, 1989.
188. Hadvig, S. and Paulsen, O. R., One-dimensional charring rates in wood. *J. Fire and Flamm*., 1, 1976, pp. 433–449.
189. Haksever, A., *Rechnerische Untersuchung des Tragverhaltens von einfach statisch unbestimmten Stahlbetonrahmen unter Brandbeanspruchung.* (In German), Institut für Baustoff-kunde und Stahlbetonbau der Technischen Universität Braunschweig, 1975.
190. Haksever, A., *Zur Frage des Trag- und Verformungsverhaltens ebene Stahlbetonrahmen im Brandfall.* (In German), Institut für Baustoffkunde und Stahlbetonbau der Technischen Universität Braunschweig, Heft 35, Braunschweig, 1977.
191. Harmathy, T. Z., Thermal performance of concrete masonry walls in fire. *Special Technical Publication No. 464.* American Society for Testing and Materials, Philadelphia, PA, 1970.
192. Havens, J. A., *Thermal Decomposition of Wood*, Dissertation, University of Oklahoma, 1969.
193. Hognestad, E., A study of combined bending and axial load in reinforced concrete members. *Bulletin No. 399*. University of Illinois Engineering Experiment Station, Urbana, IL, 1951.

194. Iding, R., Bresler, B. and Nizamuddin, Z., FIRES-T3, A computer program for the fire response of structures. *Report No. UCB FRG 77-5*, University of California, Fire Research Group, Berkeley, CA, 1977.
195. Imaizumi, D., Stability in fire of protected and unprotected glued laminated beams. *Norw. Inst. Wood Working Wood Technol.*, Meddelelse (18), 1962.
196. Ingberg, S. H. and Sale, P. D., Compressive Strength and Deformation of Structural Steel and Cast-Iron Shapes at Temperatures up to 950°C (1742°F). *Proceedings of the American Society for Testing and Materials*, 26(II), Philadelphia, PA, 1926.
197. Jeanes, D. C., *Computer modeling the fire endurance of floor systems in steel framed buildings.* ASTM STP 882, T.Z. Harmathy, ed. American Society for Testing and Materials, Philadelphia, PA, 1985.
198. Kansa, E. J., Perlee, H. E. and Chaiken, R. F., Mathematical model of wood pyrolysis including internal forced convection. *Comb. and Flame*, 29, 1977, pp. 311–324.
199. Kanury, A. M., Holve, D. J., *NBS – GCR 76-50.* National Bureau of Standards, Washington, DC, 1975.
200. King, E. G. and Glowinski, R. W., A rationalized model for calculating the fire endurance of wood beams. *Forest Products Journal*, 38(10), 1988, pp. 31–36.
201. Klingsch, W., *Traglastberechnung thermisch belasteter Stahlbetondruckglieder unter Anwendung einer zwei- und dreidimensionalen Diskretisierung.* (In German), Institut für Baustoffkunde und Stahlbetonbau der Technischen Universität Braunschweig, 1975.
202. Knudson, R. M. and Schneiwind, A. P., Performance of structural wood members exposed to fire. *For. Prod. J.*, 25(2), 1975, pp. 23–32.
203. Konicek, L. and Lie, T.T., Fire tests on protected steel columns under different fire severities. *Fire Study No. 34*. NRCC 14170, Division of Building Research, National Research Council of Canada, Ottawa, 1974.
204. Konig, J. and Kallsner, B., The influence of the support conditions on loadbearing capacity of axially loaded wood studs under simulated fire exposure. *Proceedings of the 1988 International Conference on Timber Engineering*, Seattle, WA. Forest Products Research Society, Madison, WI, 1988, pp. 423–421.
205. Lie, T. T., A method for assessing the fire resistance of laminated timber beams and columns. *Canadian Journal of Civil Engineering*, 4(2), 1977, pp. 161–169.
206. Lie, T. T., Temperature distributions in fire-exposed building columns. *Journal of Heat Transfer*, 99(1), 1977.
207. Lie, T. T., Calculation of the fire resistance of composite concrete floor and roof slabs. *Fire Technology*, 14(1), 1978, pp. 28–45.
208. Lie, T. T., A procedure to calculate fire resistance of structural members. *Fire and Materials*, 8(1), 1984, pp. 40–48.
209. Lie, T. T. and Harmathy, T.Z., A numerical procedure to calculate the temperature of protected steel columns exposed to fire. *Fire Study No. 28*. NRCC 12535, Division of Building Research, National Research Council of Canada, Ottawa, 1972.
210. Lie, T. T., Lin, T. D., Allen, D. E. and Abrams, M. S., Fire resistance of reinforced concrete columns. *Technical Paper No. 378*. Division of Building Research, National Research Council of Canada, Ottawa, 1984.
211. Liley, P. E., Physical and chemical data. *Chemical/Engineering Handbook.* McGraw-Hill, New York, 1963, p. 133.
212. Liley, P. E., Touloukian, Y.S. and Gambill, W. R., *Physical and chemical data, chemical engineers handbook*. J. H. Perry (ed.), Sec. 3. McGraw-Hill, New York, 1963.
213. Lim, K. Y. S., King, A. B., Protected nailed gusset connections for glulam members. *BRANZ Study Report SR 29*, Building Research Association of New Zealand, Judgeford, New Zealand, 1990.
214. Malhotra, H. L., *Design of fire-resisting structures*. Surrey University Press, London, 1982.
215. Noren, J., Failure of structural timber when exposed to fire. *Proceedings of the International Conference on Timber Engineering*. Forest Products Research Society, Madison, WI, 1988, pp. 397–406.
216. Odeen, K., Fire resistance of glued, laminated timber structures. *Min. Technol. Fire Offices' Comm. Joint Fire Res. Org. Symp. No. 3*, Paper No. 2, HMSO, London, 1970.
217. Parker, W. J., *Fire Safety Science — Proceedings of the First International Symposium*. Hemisphere, New York, NY, 1986.
218. Pettersson, O., *Structural fire behavior — developments, trends*. C. E. Grant and P. J. Pagni, eds., *Proceedings of the First International Symposium, International Association for Fire Safety Science*. Hemisphere Publishing Corporation, Washington, DC, 1986.

219. Pettersson, O., Jonsson, R., Reliability based design of fire exposed timber structures — State of art and summary design guide. *Report LUTVDG/(TVBB-3040)*, Lund University, Department of Fire Safety Engineering, Lund, Sweden, 1988.
220. Quast, U., Hass R. and Rudolph, K., *STABA-F*; A computer program for the determination of load-bearing and deformation behaviour of uni-axial structural elements under fire action. Institut für Bausoffkunde, Massivbau und Brandschutz der Technischen Universität Braunschweig (1982/85), 1984.
221. Reyer, E., Schlich, C., Investigations on the bending and lateral buckling of laminated wood girders under fire exposure. *Proceedings of the International Conference on Timber Engineering.* Forest Products Research Society, Madison, WI, 1988, pp. 407–422.
222. Ritter, W., *Die Bauweise Hennebique*. (In German), Schweizerische Bauzeitung, Vol. 33, 1899.
223. Roberts, A. F., The heat of reaction during the pyrolysis of wood. *Combustion and Flame*, 17, 1971.
224. Rogowski, B. F. W., Charring of timber in fire tests. *Min. Technol. Fire Offices' Comm. Joint Fire Res. Org. Symp. No. 3, Paper No. 4*. HMSO, London, 1970.
225. Schaffer, E. L., An approach to the mathematical prediction of temperature rise within a semi-infinite wood slab subjected to high temperature conditions. *Pyrodynamics*, 2, 1965, pp. 117–132.
226. Schaffer, E. L., Charring rate of selected woods — Transverse to grain. *U.S. For. Serv. Res. Paper FPL 69*. U.S. Department of Agriculture, Forest Service, Forest Products Laboratory, Madison, WI, 1967.
227. Schaffer, E. L., State of structural timber fire endurance. *Wood and Fiber*, 9(2), 1977, pp. 145–190.
228. Schaffer, E. L., Marx, C. M., Bender, D. A. and Woeste, F. E., Strength validation and fire endurance of glued-laminated timber beams. *Research Paper FPL 467*. U.S. Department of Agriculture, Forest Service, Forest Products Laboratory, Madison, WI, 1986.
229. Schaffer., E. L. and Woeste, F. E., Reliability analysis of a fire-exposed unprotected floor truss. *Proceedings, Metal Plate Wood Truss Conference.* Forest Products Research Society, Madison, WI, 1981, pp. 131–137.
230. Schaffer., E. L. and Woeste, F. E., Second moment reliability of fire-exposed wood joist floor assemblies. *Fire and Matls*. 3(3), 1979, p. 126.
231. Schaffer., E. L. and Woeste, F. E., Second moment reliability of fire-exposed wood joist floor assemblies. *Fire and Matls*. 3(3), 1979, p. 126.
232. Schaffer., E. L. and Woeste, F. E., Reliability analysis of fire-exposed light-frame wood floor assemblies. *Research Paper FPL 386.* USDA Forest Service, Forest Products Lab, Madison, WI, 1981.
233. White, R. H. and Shaffer, E. L., Application of CMA program to wood charring. *Fire Tech*., 14(4), 1989, pp. 279–290, 296.
234. White, R. H. and Shaffer, E. L., Transient moisture gradient in fire-exposed wood slab. *Wood and Fiber*, 13(17), 1981, p. 296.
235. White, R. H. and Shaffer, E. L., Replicate fire endurance tests of an unprotected wood joist floor assembly. *Wood and Fiber*, 16(3), 1984, pp. 374–390.
236. Wickstrom, U., TASEF-2, A computer program for temperature analysis of structures exposed to fire. *Report No. 79-2*, Lund Institute of Technology, Department of Structural Mechanics, Lund, Sweden, 1979.
237. Williams-Leir, G., Analytical equivalents of standard fire temperature curves. *Fire Technology*, 9(2), 1973, pp. 132–136.
238. Williams-Leir, G., Analytical equivalents of standard fire temperature curves. *Fire Technology*, 9(2), 1973, pp. 132–136.
239. Witteveen, J., Twilt, L. and Bylaard, F. S. K., The stability of braced and unbraced frames at elevated temperatures. Second Int. Colloquium on Column Strength, Liege, Belgium, 1977.
240. Zienkiewicz, O. C. and Cheung, Y. K., *The finite element method in structural and continuum mechanics.* McGraw-Hill Publishing Co. Ltd., London, 1967.
241. Schneider, U. and Haksever, A., *Bestimmung der äquivalenten Branddauer von statisch bestimmt gelagerten Stahlbetonbalken bei natürlichen Branden.* (In German), Bericht des Instituts für Baustoffkunde und Stahlbetonbau der Technischen Universität Braunschweig, 1976.
242. Spiers, H. M., *Technical data on fuel*, 6th Edition. World Press Conference, London, 1961.
243. Stanzak, W. W. and Lie, T. T., Fire resistance of unprotected steel columns. *Journal of the Structural Division, ASCE, 99*(ST5), 1973, p. 9719.
244. Tinney, E. R., *Tenth Symposium Int. on Combustion.* The Combustion Institute, Pittsburg, PA, 1965.
245. Trinks, W. and Mawhinney, M. W., *Industrial Furnaces*. Carnegie Inst. Technology, Wiley, New York, 1981.

246. White, R. H., *Charring rate of different wood species.* PhD Dissertation, Madison, WI, University of Wisconsin, 1988.
247. White, R. H. and Nordheim, E. V., Charring rate of wood for ASTM E119 Exposure. *Fire Technology*, 28(1), 1992, pp. 5–30.
248. Lie, T. T., *Fire and buildings.* Applied Science Publishers Limited, London, 1972, pp. 9–11.
249. Lie, T. T., Characteristic temperature curves for various fire severities. *Fire* Technology, 10(4), 1974, pp. 315–326.
250. Magnusson, S. E. and Thelandersson, S., Temperature–time curves of complete process of fire development. Theoretical study of wood fuel fires in enclosed spaces. *Civil Engineering and Building Construction Series No. 65*. Acta Polytechnica Scandinavica, Stockholm, Sweden, 1970.
251. Odeen, K., Theoretical study of fire characteristics in enclosed spaces. *Bulletin 10*, Division of Building Construction, Royal Institute of Technology, Stockholm, Sweden, 1963.
252. Thomas, P. H., Heselden, A. J. M., Fully-developed fires in single compartments. *Fire Research Note No. 923*, Building Research Establishment, Fire Research Station, Boreham-wood, U.K., 1972.
253. Thomas, P. H., Heselden, A. J. M. and Law, M., Fully-developed compartment fires; two kinds of behaviour. *Fire Research Technical Paper No. 18.* HMSO, London, 1967.
254. Tsuchiya, Y. and Sumi, K., Computation of the behaviour of fire in an enclosure. *Combustion and Flame*, 16, 1971, p. 131.
255. Williams-Leir, G., Analytical equivalents of standard fire temperature curves. *Fire Technology*, 9(2), 1973, pp. 132–136.
256. Abrams, M. S., *et al.*, Fire endurance of continuous reinforced concrete beams. *Preliminary Report of the Tenth Congress of the International Association for Bridge and Structural Engineering.* Portland Cement Association, Skokie, IL, 1976.
257. Abrams, M. S. and Gustaferro, A. H., Fire endurance of two-course floors and roofs. *Journal of the American Concrete Institute*, 66(2), 1969, pp. 92–102.
258. Abrams, M. S., Gustaferro, A. H. and Salse, E. A. B., Fire tests of concrete joist floors and roofs. *Research and Development Bulletin No. RD006.01B*. Portland Cement Association, Skokie, IL, 1971.
259. Allen, L. W. and Harmathy, T. Z., *Fire endurance of selected concrete masonry units*. Journal of the American concrete Institute, 69, 1985.
260. American Concrete Institute, *Guide for determining the fire endurance of concrete elements. ACI 216R81,* 1987.
261. American Insurance Services Group, *Fire resistance ratings.* New York, 1985.
262. American Iron and Steel Institute, *Designing fire protection for steel trusses.* Washington, DC, 1976.
263. American Iron and Steel Institute, *Designing fire protection for steel columns*, Third Edition. Washington, DC, 1980.
264. American Iron and Steel Institute, *Fire Resistance Ratings of Load-Bearing Steel Stud Walls.* Washington, DC, 1981.
265. American Iron and Steel Institute, *Designing fire protection for steel beams.* Washington, DC, 1984.
266. American Society for Testing and Materials, *Standard Methods of Fire Tests of Building Construction and Materials, ANSI/ASTM E119–83*. Philadelphia, PA, 1985.
267. Brick Institute of America, Technical notes on brick construction. *Technical Note No. 16.* McLean, VA, 1974.
268. Canadian Standards Association, *Code for the engineering design of wood, CSA standard 086*. Rexdale, Ontario, 1984.
269. Culver, C. G., Aggarwal, V. and Ossenbruggen, P., Buckling of columns at elevated temperatures. *Journal of the Structural Division, ASCE*, 99(ST4), 1973, pp. 715–726.
270. Fitzgerald, R. W., Structural integrity during fire. *Fire Protection Handbook*, National Fire Protection Association, 16th edn, Section 7, Chapter 8. Quincy, MA, 1986, pp. 7–82 to 7–108.
271. Flemington, R. A., Fire protection of hollow structural section. *Technical Bulletin 21.* Stelco Inc., Toronto, Canada, 1980.
272. Gustaferro, A. H., Temperature criteria at failure. *Fire Test Performance, STP-464.* American Society for Testing and Materials, Philadelphia, PA, 1970, pp. 68–84.
273. Gustaferro, A. H. and Selvaggio, S. L., Fire endurance of simply-supported prestressed concrete slabs. *Journal, Prestressed Concrete Institute*, 12(1), 1967, pp. 37–32.
274. Gypsum Association, *Fire resistance design manual.* Evanston, IL, 1978.
Harmathy, T. Z., Ten rules of fire endurance rating. *Fire Technology*, 1(2), 1965, pp. 93–102.
275. Harmathy, T. Z., Thermal performance of concrete masonry walls and fire. *Special Technical Publication 464*. American Society for Testing and Materials, Philadelphia, PA, 1970.

276. Institute for Structural Materials and Buildings Structures, *Fire test of a simple, statically indeterminant beam, Delft.* (English Translation, SLA Translation Center, John Crear Library, Chicago), 1959.
277. International Committee for the Study and Development of Tubular Structures, *CIDECT Document #15A76/36*, 1976.
278. Issen, L. A., Gustaferro, A. H. and Carlson, C. C., Fire tests of concrete members: An improved method for estimating restraint forces. *Fire Test Performance, STP-464*. American Society for Testing and Materials, Philadelphia, PA, 1970, pp. 153–185.
279. Jeanes, David C., Application of the computer in modeling fire endurance of structural steel floor systems. *Fire Safety Journal,* 9, 1985.
280. Klipstein, K. H., Behavior of cold-formed steel studs in fire tests. *Proceedings, Fifth Speciality Conference*, University of Missouri-Rolla, 1980.
281. Lie, T. T., *Fire and Buildings*. Applied Science Publishers Ltd., Barking, U.K., 1982.
282. Lie, T. T., A method for assessing the fire resistance of laminated timber beams and columns. *Canadian Journal of Civil Engineering*, 4(2), 1977, pp. 161–169.
283. Lie, T. T., Calculation of the fire resistance of composite concrete floor and roof slabs. *Fire Technology*, 14(1), 1978.
284. Lie, T. T., A procedure to calculate fire resistance of structural members. *Fire and Materials*, 8(1), 1984.
285. Lie, T. T. and Allen, D. E., Calculation of the fire resistance of reinforced concrete columns. *Technical Paper No. 378.* Division of Building Research, National Research Council of Canada, 1972.
286. Lie, T. T. and Harmathy, T. Z., Fire endurance of concrete-protected steel columns. *Journal of the American Concrete Institute* (1), 1974.
287. Lie, T. T. Lin, T. D., Allen, D. E. and Abrams, M. S., Fire resistance of reinforced concrete columns. *Technical Paper No. 378.* Division of Building Research, National Research Council of Canada, 1984.
288. Lie, T. T. and Stanzak, W. W., Fire resistance of protected steel columns. *Engineering Journal*, American Institute of Steel Construction, 10(3), 1973.
289. British Standards Institution, *Code of practice for fire precautions.* BSI, London, BS 5588.
290. International Standards Organisation, *Fire resistance tests—elements of building constructions*, ISO, 1977.
291. The European Convention for Construction Steelwork. Preprints, 1979.
292. Bangash, M. Y. H., *Concrete and concrete structures numerical modeling and applications*, Thomas Telford, London, 2nd edition, 1999.
293. Purkiss, J. A., Fire safety engineering. *Design of Structures.* Butterworth–Heinemann, Oxford, 1996.
294. Miller, G. D. and Iff, L. W., *Steel fire protection: an engineering approach.* Stelco Inc., Toronto, 1974.
295. American Institute of Steel Construction, *Steel Designer's Manual*. AISC, 1996.
296. Glos, P., *Festigkeit von Bauholz bei hohen Temperaturen.* Research Report, 1990.
297. Bangash, M. Y. H., *Prototype Building Structures*. Analysis and Design. Thomas Telpord, London 1999. p. 921.
298. Bangash, M. Y. H. and Bangash. T., *Explosion Resistant Buildings Springs Verlag*. 2006. p. 789. Heidelberg.

10

Elements for supporting structures

10.1 TRUSSES SUPPORTING TRAVELATORS

10.1.1 *Influence lines method*

The tresses shown on Fig. (10.1) is simply supported at A and B and continuous over support at C and D are to be obtained. The load is assumed to travel on top chord from the treads of this truss.

In the first place both the supports C and D are supposed to be removed and a unit load acting downwards is applied at C. A Williot-Mohr diagram is drawn for the simply supported truss AB and from it the deflection polygon for the top chord is obtained. A similar polygon is drawn for a unit load acting downwards at D. These polygons are also the influence lines for the deflections at C and D respectively and from them we can measure.

Δc, the deflection of point C under a unit load at any panel point M on the top chord.
And δd, the deflection of point C under a unit load at any panel point M on the top chord.

From the Williot-Mohr diagrams the following data are found:

Δc, the vertical movement of the point C for a unit load at C,
Δ'c, the vertical movement of the point C for a unit load at D,
Δd, the vertical movement of the point D for a unit load at D,
Δ'd, the vertical movement of the point D for a unit load at C.

Let Rc and Rd be the reactions at C and D when the supports are in position and a unit load acts at M and suppose these forces are applied upward to the truss deflected by the load at M.

Under the action of such forces alone, the movement of C would be $\mathrm{Rc}\Delta\mathrm{c} + \mathrm{Rd}\Delta'\mathrm{c}$ and the movement of D would be $\mathrm{Rc}\Delta'\mathrm{d} + \mathrm{Rd}\Delta\mathrm{d}$.

Since it is assumed that in the actual truss the points C and D do not move, these movements must be respectively equal to δc and δd, i.e.

$$\delta c = \mathrm{Rc}\Delta\mathrm{c} + \mathrm{Rd}\Delta'\mathrm{c}$$

$$\text{and} \quad \delta\mathrm{d} = \mathrm{Rc}\Delta'\mathrm{d} + \mathrm{Rd}\Delta\mathrm{d}$$

The solution of these simultaneous equations gives the values of Rc and Rd.

The terms Δc, Δ'c, Δd, Δ'd are constants for a given truss and are found once and for all from the Williot-Mohr diagrams while the terms δc and δd are measured directly from the influence diagrams. The above equations can therefore be formed quickly for all panel points on the top chord and the values of Rc and Rd thus determined enable the influence lines of reaction at C and D to be drawn.

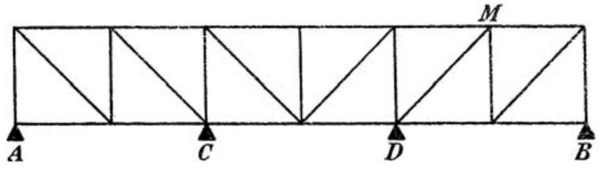

Figure 10.1. N-Trusses.

Methods such as flexibility and stiffness methods can be employed for solving such trusses. They are explained later in this text.

The load is a cling as a transfer load to travel along the bottom chord of the truss. The force in the diagonal member at GE in Fig. (10.2) is considered.

If the shearing force across the panel GE is F, the force in GE is F cosec θ.

As long as the load is between A and Q or between E and C the shearing force across the panel is the same as that for a girder, and the influence line of shearing force is drawn exactly as shown. When it is between Q and E some modification is necessary.

Project points Q and E to cut AN and CP at K and J respectively and AC at R and S. Join KJ and let this line cut AC at O. Through O draw NOP perpendicular at AC.

$$\text{Then} \qquad \frac{ON}{OP} = \frac{KN}{PJ} = \frac{OR}{OS} \tag{10.1}$$

$$\text{and so} \qquad \frac{ON}{NP} = \frac{OR}{RS} = \frac{OR}{c}$$

Since NP represents unity on the influence diagram we obtain

$$ON = \frac{OR}{c} \tag{10.2}$$

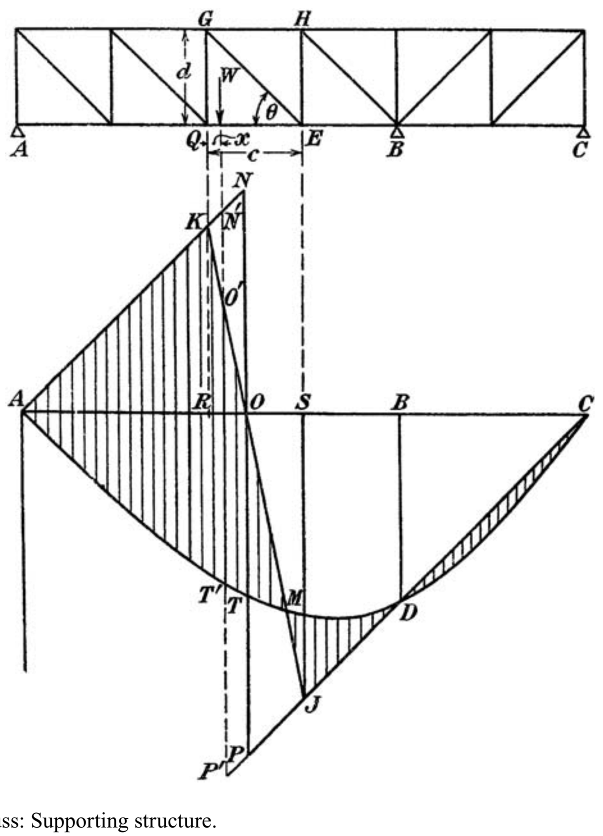

Figure 10.2. N-Truss: Supporting structure.

If the load acts at x from Q and its line of action cuts the diagram at N′O′T′P′, we have

$$O'T' = N'P' - O'N' - T'P' \tag{10.3}$$

$$= 1 - \frac{x}{c} - R_A$$

$$= -R_A + \frac{c-x}{c} \tag{10.4}$$

But $c - x/c$ is the proportion of the load transferred to Q by the beam action of QE and so O′T′ represents the shearing force across the panel GE. The influence diagram for F is therefore as shown shaded in Fig. (10.2) and the ordinates to this when multiplied by cosec θ give the force in GE for all load positions.

The force in the chord member QE is, by the method of sections, equal to

$$\frac{\text{Moment about G}}{d} \tag{10.5}$$

The moments about G are the same as for a continuous girder and so if the influence line of bending moments for G is drawn the ordinates of this diagram when divided by d gives the ordinates of the required influence line of force in QE.

10.1.2 Forces in redundant bars by influence diagrams

The construction of influence lines enables the calculation of the forces in redundant bars of a truss to be made quickly for any position of the load. Let Fig. (10.3) represent a truss supported at A and B and having one redundant member PQ for which the force of influence line is required when the bottom chord is loaded. Suppose the bar PQ to be removed and unit loads to act at P and Q as shown. The forces in all the members of the resulting just-stiff frame can be found and their changes of length calculated. A Williot-Mohr diagram and a deflection polygon for the bottom chord is then constructed. The ordinate δm to this deflection polygon at any panel point M on the bottom chord is the vertical displacement of this point under unit loads at P and Q and by Clerk Maxwell's theorem it is therefore the amount by which the points P and Q separate when a unit load acts vertically at M. The polygon is therefore the influence line of separation of P and Q when the member PQ is removed.

The free separation of P and Q can also be obtained from the Williot-Mohr diagram; let this be Δ.

When the redundant member is in position and a unit load acts at M let R be the force in PQ. This force will cause the member to stretch by an amount RL/AE where L is its length, A is its cross-sectional area and E is Young's modulus for the material, and the force R will pull the points P and Q together by an amount RΔ.

The total separation of the two points in the absence of the member PQ is δm and so

$$R\Delta + \frac{RL}{AE} = \delta_m \tag{10.6}$$

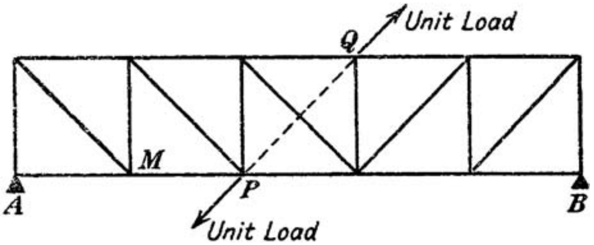

Figure 10.3. N-Truss: Influence line method of finding forces.

or

$$R = \frac{\delta_m}{\Delta + \dfrac{L}{AE}} \tag{10.7}$$

Hence if the ordinates of the deflection polygon for the bottom chord under unit loads at P and Q are divided by the term $\Delta + L/AE$ the deflection polygon represents the influence line for the force in PQ. If the truss has two redundant members PQ and ST as shown in Fig. (10.4) the following method may be used to determine the forces in them as a load crosses the truss.

PQ and ST are assumed to be removed and unit loads placed at P and Q. The stresses in the remaining bars are circulated, the alterations in their lengths determined and a Williot-Mohr diagram is drawn from which the deflection polygon is also the influence line representing the separation of points P and Q. Thus, if a load is of unity is placed at any panel point M in the lower chord the ordinate to the influence line representing the separation of points P and Q. Thus if a load of unity is placed at any panel point M on the lower chord the ordinate to the influence line at M is the amount by which P and Q separate. Call this 1δ m. From the Williot-Mohr diagram are also obtained Δ_1 the amount by which P and Q separate under unit loads at P and Q, and Δ_1' the amount by which S and T separate under the action of the same loads. Similar diagrams are drawn for unit loads acting at S and T for a unit load at M; Δ_2 and Δ_2' the separations of S and T and of P and Q respectively under unit loads at S and T.

The redundant bars PQ and ST are now supposed to be in position, the forces in them when a unit load is placed at M being R_1 and R_2 respectively.

Due to the force R_1 acting at P and Q
P and Q approach by an amount $R_1\Delta_1$
And S and T approach by an amount $R_1\Delta_1'$
Due to the force R_2 acting at S and T,
P and Q approach by an amount $R_2\Delta_2'$
And S and T approach by an amount $R_2\Delta_2$
Hence due to R_1 and R_2 acting together
P and Q approach by an amount $R_1\Delta_1 + R_2\Delta_2'$
While S and T approach by an amount $R_1\Delta_1 + R_2\Delta_2$.

The lengths of the members PQ and ST are increased by amounts R_1L_1/A_1E and R_2L_2/A_2E due to the loads in them and so we have:

$${}_1\delta_m = R_1\Delta_1 + R_2\Delta_2' + \frac{R_1L_1}{A_1E} \tag{10.8}$$

and

$${}_2\delta_m = R_1\Delta_1' + R_2\Delta_2 + \frac{R_2L_2}{A_2E} \tag{10.9}$$

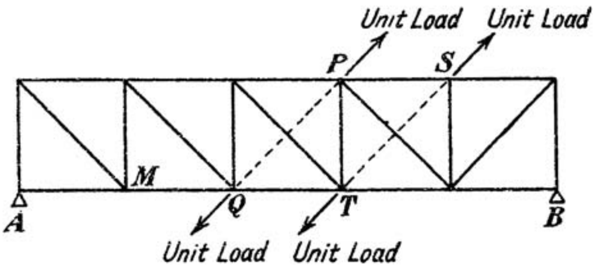

Figure 10.4. N-Trusses: Redundant bars evaluation.

These simultaneous equations enable the values of R_1 and R_2 to be found. It will be noticed that Δ_1 and Δ_1' and Δ_2 and Δ_2' are constant values for the frame whatever the position of the load on the bottom chord, while ${}_1\delta_m$ and ${}_2\delta_m$ are found from the respective deflection polygons. By this method therefore the forces in the two redundant members for any position of the load can be calculated by the solution of two simple simultaneous equations once the influence lines have been drawn.

10.1.3 *Maximum bending moments and shear forces*

The exact calculation of the maximum bending moments and shearing forces at all sections of a travelator as a train of loads passes across it is very laborious and the uncertainties introduced by the dynamic effects of the system travelling at high speed are such that extreme accuracy in calculation is not justified. It is usual therefore in design to adopt conventional systems of load to simplify the procedure.

One method assumes that the effect of a train of rollers can be reproduced by an equivalent uniformly distributed load. It has already been shown that when a single load traverses a girder the curve of maximum bending moments is a parabola having a maximum ordinate WL/4 at the centre of the span: if the concentrated load be supposed to be replaced by a uniformly distributed load of intensity w it is necessary, if the maximum bending moments are to be the same, to make:

$$\frac{wL^2}{8} = \frac{WL}{4} \tag{10.10}$$

$$\text{i.e.} \qquad w = \frac{2W}{L}$$

The bending moments at all the points when this equivalent load w covers the span will be the same as those under the concentrated load W as it traverses the travelators. The maximum shearing forces caused by both will also be the same at the ends of the beam but for no other points, since in the case of the concentrated load the curves of maximum shearing force are straight lines whilst in the case of the uniformly distributed load they are parabolas.

When the train consists of a number of concentrated loads under rollers, the curve of maximum bending moments can be enveloped by a curve which approximates to a parabola but which is rather flatter at midspan and steeper at the ends than a true parabola. It is thus impossible to obtain exact agreement at all points when a uniformly distributed load is substituted for a train. If a parabola is drawn which has the same area as the true curve, the ordinates of the true curves are equal at about the quarter point of the span and one approximate method of determining the effect of a train of loads is to calculate the maximum ending moment they produce at the quarter point and to make the equivalent uniformly distributed load of such magnitude that it gives the same value at that point.

The bending moment at the quarter-point of the span under a uniformly distributed load of intensity w is $3wL^2/32$ and if the calculated maximum bending moment at the same point due to the actual load system is M′ the equivalent load is:

$$w = \frac{32M'}{3L^2} \tag{10.11}$$

This equivalent load gives a bending moment at the centre of the span rather greater and near the end rather less than the correct values. Agreement between the true bending moment and that due to a uniformly distributed load may be obtained for any point other than the quarter span by using a different value of w and if a number of travelators or passenger walks have to be designed for the same rolling load system it is worthwhile to determine the values of w appropriate to a number of points along the span. Once tables or curves embodying these data have been obtained they can be applied very simply to the design of any travelators or passenger walks subjected to the particular load system, but unless the number to be designed is considerable the time involved in obtaining the data will not be justified.

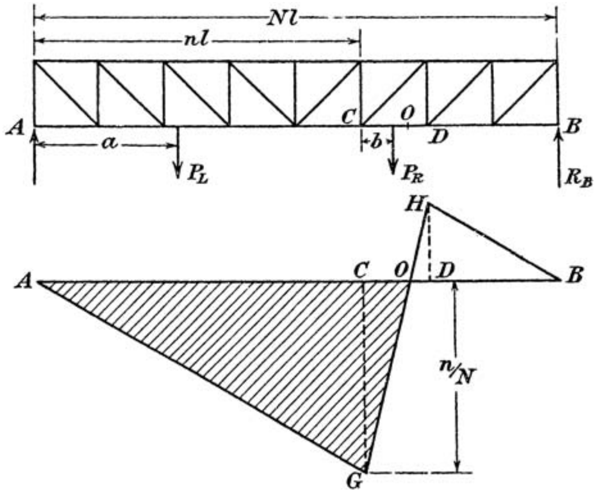

Figure 10.5. Moment in trusses.

In general, if M′ is the true bending moment caused at the $1/n$th point of the bridge by the actual load system and w the equivalent distributed load which produces the same bending moment at this point we make:

$$M' = \frac{w}{2}\left(\frac{n-1}{n^2}\right)L^2 \tag{10.12}$$

or

$$w = \frac{2n^2M'}{(n-1)\,L^2} \tag{10.13}$$

Figure (10.5) shows a truss and the influence line of shearing force for the panel CD. The panels are of equal length l. Suppose that any system of loads is placed on the section AO of the truss and let P_L and P_R be the resultants of the loads to the left and right of C respectively.

These resultants act at distance a from A and b from C. It is evident from the geometry of the diagram that:

$$OC = \frac{nl}{N-1}; \quad AO = \frac{Nnl}{N-1} \tag{10.14}$$

and C is the $1/N$th point of the length OA.

Suppose the length AO to be a simply supported beam, then the bending moment at C, due to the load system is:

$$M_C = -R_0 \cdot CO + P_R \cdot b \tag{10.15}$$

where R_0 is the reaction at O.

$$\text{i.e.}\quad M_C = -\frac{1}{N}\left\{\frac{aP_L}{AO} + \left(\frac{AC+b}{AO}\right)P_R\right\} + P_Rb \tag{10.16}$$

On substituting for the lengths this becomes:

$$M_C = -\frac{1}{N}\left\{aP_L + (nl+b)\,P_R - NbP_R\right\} \tag{10.17}$$

Now consider the complete span AB.

The shearing force across the panel CD is:

$$S_{CD} = R_B - \frac{b}{l} P_R \tag{10.18}$$

which gives on substitution for R_B,

$$S_{CD} = \frac{1}{Nl} \left\{ aP_L + (nl + b)\, P_R - NbP_R \right\}, \tag{10.19}$$

i.e. for any system of loads on AO,

$$M_C = lS_{CD} \text{ numerically} \tag{10.20}$$

Now let w_s be the uniformly distributed load which will give the same maximum shearing force across the panel CD as the actual load system considered. This will occur when the length AO is covered and then,

$$S_{CD} = w_s(\text{area AOG}) \tag{10.21}$$

$$= w_s \times \frac{n}{N} \times \frac{Nnl}{2(N-1)}$$

or

$$S_{CD} = \frac{w_s n^2 l}{2(N-1)} \tag{10.22}$$

Hence the true bending moment at C on a span of length AO is, from Eq. (10.20),

$$M_C = \frac{w_s n^2 l^2}{2(N-1)} \tag{10.23}$$

Now the influence line of bending moments for point C on the span AO is a triangle similar to AOG, the ordinate CG being given by $AC \cdot CO/AO$ i.e. by nl/N.

From the tables or curves of equivalent loading already prepared we determine the value appropriate to the $1/N$th point on a span of length AO. If this is w, the correct bending moment at C is, from the influence line,

$$\frac{w}{2} \times AO \times \frac{nl}{N}$$

or

$$M_C = \frac{wn^2 l^2}{2\,(N-1)}$$

Equating this to the value given in Eq. (10.23) we obtain,

$$w_s = w \tag{10.24}$$

Hence to determine the true value of the shearing force across the panel CD, we assume AO to carry the uniform load which produces the correct bending moment at the $1/N$th point on a span AO.

10.1.4 *Flexibility method of analysis*

The structure is made to statically determinate specifications. Calculate statical moments, shears and axial effects etc. Remove the loads on the travelator deck and apply indeterminate reactions one by one and draw flexibility diagrams. The final diagrams are drawn by algebraically adding all quantities along the ordinates of indeterminacy or other specified locations. The determinate moment, for example is M_0 and various other indeterminates are X_1, X_2, $X_3 \ldots X_n$. The final moment is:

$$M = M_0 + M_1X_1 + M_2X_2 + \ldots\ldots M_nX_n \tag{10.25}$$

where M_1 to M_n are moments from the redundant reactions that are similar for axial effects:

$$N = N_0 + N_1X_1 + N_2X_2 + \ldots.N_nX_n \tag{10.26}$$

Other effects such as shear torsion can be represented in the same way. All are algebraically added in the form:

$$f_{ik} = \underbrace{\int_s M_tM_k\frac{ds}{EI}}_{bending} + \underbrace{\int_s N_iN_k\frac{ds}{EA}}_{direct\ force} + \lambda\underbrace{\int_s \frac{V_iV_kds}{GA}}_{shear} + \underbrace{\int_s \frac{M_{ti}M_{tk}ds}{GI_t}}_{torsion} \tag{10.27}$$

where it has a variable section.

The component of the travelator is divided into several points and moment I is integrated within the established points:

$$\left.\begin{array}{ll} \text{for bending} & ds^I = \frac{I_C}{I}ds \\ \text{for direct force} & ds^{II} = \frac{I_C}{A}ds \\ \text{for shear force} & ds^{III} = \frac{EI_C}{GA}ds \\ \text{for torsional moment} & ds^{IV} = \frac{EI_C}{GI_t} \end{array}\right\} \tag{10.28}$$

A Simpson rule is adopted for the integration process:

$$\text{area under curve} = \frac{L}{3}(y_1 + 4y_2 + y_3) \tag{10.29}$$

Where y_1, y_2, y_3 are the ordinates between two equal spaces L. The product integral can be easily obtained by using Table 10.1. This will ease the job of evaluating various moments and forces. The flexibility matrix for n indeterminacies is given as:

$$\begin{bmatrix} f_{11} & f_{12}\cdots f_{1n} \\ f_{21} & f_{22}\cdots f_{2n} \\ \vdots & \vdots \qquad \vdots \\ f_{n1} & f_{n2}\cdots f_{nn} \end{bmatrix} \begin{Bmatrix} X_1 \\ X_2 \\ \vdots \\ X_n \end{Bmatrix} = -\begin{Bmatrix} D_{10} \\ D_{20} \\ \vdots \\ D_{n0} \end{Bmatrix} \tag{10.30}$$

$$[f] \times \{X\} = -\{D\} \tag{10.31}$$

The Ds are displacements for statically determinate assumed structure and Xs are indeterminate quantities obtained by matrix $[f]$. In the analysis a choice is given either to find moments first or reactions first. All other quantities are determined subsequently.

Table 10.1 gives flexibility coefficients for solving such problems.

Application to deflection of trusses

An expression for the principle of virtual work as applied specifically to trusses. Consider first the case of an ideal pin-jointed truss where both the deforming P loads and the virtual Q loads are applied only at the joints of the truss. In such a case, the individual members will be subjected only to axial member forces F_P with no shear or bending moment involved. Furthermore, the member force F_Q will be constant throughout the length L of a given member, and since:

$$\int_0^L e_o ds = \text{axial change in length of member} = \Delta L \tag{10.32}$$

Table 10.1. Flexibility coefficients.

$\int M_i M_k \, ds$	K ▭ K, l	◺ K, l	K_1 ▭ K_2, l	K_m, l	K, l	K, l	αl, K, l, β
① i, l, i	lik	$\frac{1}{2} lik$	$\frac{1}{2} li(k_1 + k_2)$	$\frac{2}{3} lik_m$	$\frac{2}{3} lik$	$\frac{1}{3} lik$	$\frac{1}{2} lik$
② l, i	$\frac{1}{2} lik$	$\frac{1}{3} lik$	$\frac{1}{6} li(k_1 + 2k_2)$	$\frac{1}{3} lik_m$	$\frac{5}{12} lik$	$\frac{1}{4} lik$	$\frac{1}{6} l(1+\alpha)ik$
③ i, l	$\frac{1}{2} lik$	$\frac{1}{6} lik$	$\frac{1}{6} li(2k_1 + k_2)$	$\frac{1}{3} lik_m$	$\frac{1}{4} lik$	$\frac{1}{12} lik$	$\frac{1}{6} l(1+\beta)ik$
④ i_1, l, i_2	$\frac{1}{2} l(i_1 + i_2)k$	$\frac{1}{6} l(i_1 + 2i_2)k$	$\frac{1}{6} l(2i_1k_1 + i_1k_2$ $+ i_2k_2 + 2i_2k_2)$	$\frac{1}{3} l(i_1 + i_2)k_m$	$\frac{1}{12} l(3i_1 + 5i_2)k$	$\frac{1}{12} s(i_1 + 3i_2)k$	$\frac{1}{6} lk((1+\beta)i_1)$ $+(1+\alpha)i_2$
⑤ i_m, l	$\frac{2}{3} li_m k$	$\frac{1}{3} li_m k$	$\frac{1}{3} li_m(k_1 + k_2)$	$\frac{8}{15} li_m k_m$	$\frac{7}{15} li_m k$	$\frac{1}{5} li_m k$	$\frac{1}{3} l(1+\alpha\beta)i_m k$
⑥ l, i	$\frac{2}{3} lik$	$\frac{5}{12} lik$	$\frac{1}{12} li(3k_1 + 5k_2)$	$\frac{7}{15} lik_m$	$\frac{8}{15} lik$	$\frac{3}{10} lik$	$\frac{1}{12} l(5 - \beta - \beta^2)$
	$\frac{2}{3} lik$	$\frac{1}{4} lik$	$\frac{1}{12} li(5k_1 + 3k_2)$	$\frac{7}{15} lik_m$	$\frac{11}{30} lik$	$\frac{2}{15} lik$	$\frac{1}{12} l(5 - \alpha - \alpha^2)$
⑦ i, l	$\frac{1}{3} lik$	$\frac{1}{4} lik$	$\frac{1}{12} li(k_1 + 3k_2)$	$\frac{1}{5} lik_m$	$\frac{3}{10} lik$	$\frac{1}{5} lik$	$\frac{1}{12} l(1 + \alpha + \alpha^2)$
⑧ l, i	$\frac{1}{3} lik$	$\frac{1}{12} lik$	$\frac{1}{12} li(3k_1 + k_2)$	$\frac{1}{5} lik_m$	$\frac{2}{15} lik$	$\frac{1}{30} lik$	$\frac{1}{12} l(1 + \beta + \beta^2)$
⑨ i, l	$\frac{1}{2} lik$	$\frac{1}{6} l(1+\alpha)ik$	$\frac{1}{6} li(1+\beta)k_1$ $+(1+\alpha)k_2$	$\frac{1}{3} l(1+\alpha\beta)ik_m$	$\frac{1}{12} l(5 - \beta - \beta^2)ik$	$\frac{1}{12} l(1 + \alpha + \alpha^2)ik$	$\frac{1}{3} lik$
⑩ αl, i, βl, l	lk^2	$\frac{1}{3} lk^2$	$\frac{1}{3} l(k_1^2 + k_2^2 + k_1k_2)$	$\frac{8}{15} lk_m^2$	$\frac{8}{15} lk^2$	$\frac{1}{5} lk^2$	$\frac{1}{3} lk^2$

where,

$e_0 =$ axial strains due to P or Q loads and temperature change t.

F_P and F_Q axial forces due to P or Q.

In a similar fashion, the following third and fourth terms could be added by giving the contributions of the deformations due to the bending shears Sp and twisting moments T_P to the total:

$$C_s = \int_0^L \frac{V_Q V_P}{AG} \mathrm{d}s + \int_0^L \frac{T_Q T_P}{K_T G} \mathrm{d}s \tag{10.33}$$

where,

$V_Q, T_Q =$ shear and twisting moment on section m-m′ due to Q loads;

$Cs =$ shape factor varying with shape of cross section;

$K_t =$ torsional constant for cross section (equals polar moment of inertia for circular cross section); and

$G =$ shear modulus of material in addition to the notation introduced previously.

The virtual work of deformation for one particular truss member becomes:

$$W_d = F_Q \int_0^L e_0 ds = F_Q \Delta L \tag{10.34}$$

When such products for all the members of the truss are summed, the internal virtual work of deformation for the entire truss may be represented as:

$$W_d = \sum F_Q \Delta L \tag{10.35}$$

and therefore the principle of virtual work as applied to an ideal pin-jointed truss becomes:

$$\sum Q\delta = \sum F_Q \Delta L \tag{10.36}$$

Suitable expressions for ΔL can easily be developed, depending on whether the imposed change in length is produced by the P loads, by a change in temperature, or by some other cause. For a prismatic member having a constant cross-sectional area A_s and a constant modulus of elasticity E, if the deformation is due to joint loads P on the truss, then

$$\Delta L = \frac{F_P L}{A_s E} \tag{10.37}$$

if the deformation is due to a uniform change in temperature t, then

$$\Delta L = \alpha_t t L \tag{10.38}$$

and if the deformation is caused by both these effects acting simultaneously, then

$$\Delta L = \frac{F_P L}{A_s E} + \alpha_t t L \tag{10.39}$$

Equation (10.36) is the basis for the method of virtual work for computing the deflection of ideal pin-jointed trusses. Suppose, for example, that we wish to compute the vertical component of the deflection of joint c caused by the P loads. Suppose that we select as the virtual Q-load system a unit vertical load at joint c together with its reactions. If we imagine that we first apply this system to the structure, then when we apply the actual deforming loads P, the Q loads will be given a ride and will do a certain amount of external virtual work. According to the principle of virtual work, the internal Q stresses will do an equal amount of internal virtual work as the members change length owing to the Fp stresses. Applying Eq. (10.36) gives:

$$(1)(\delta_c) + W_R = \sum F_Q \frac{F_P L}{A_s E} \tag{10.40}$$

Table 10.2. Truss deflection problems under Q-system of loads.

Deflection component	Q – System	$\Sigma Q\delta = \Sigma F_Q \Delta L$	Remarks
1. Vertical component of deflection of joint	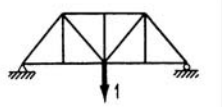	$(1)(\delta_V^{\downarrow}) + \mathcal{W}_R = \Sigma F_Q \Delta L$ $\mathcal{W}_R$ = external virtual work done by Q reactions	δ plus when in same direction as corresponding Q force; plus direction indicated by arrows; therefore, minus direction opposite to arrows; F_Q plus when tension; ΔL plus when elongation; F_P plus when ten. $\mathcal{W}_R = 0$ if supports are unyielding; $\mathcal{W}_R$ easily evaluated if support settlements known.
2. Horizontal comp. of deflection of joint	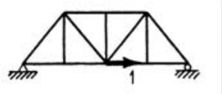	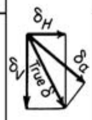 $(1)(\delta_H^{\rightarrow}) + \mathcal{W}_R = \Sigma F_Q \Delta L$	
3. Any component of deflection of joint	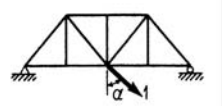	$(1)(\delta_\alpha^{\searrow}) + \mathcal{W}_R = \Sigma F_Q \Delta L$	
4. Relative deflection of two joints along line joining them	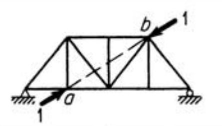	$(1)(\delta_a^{\nearrow}) + (1)(\delta_b^{\swarrow}) + W_R = \Sigma F_Q \Delta L$ $(1)(\delta_a^{\nearrow} + \delta_b^{\swarrow}) + \mathcal{W}_R = 0$ $(1)(\delta_{a-b}^{\nearrow\swarrow}) + \mathcal{W}_R = \Sigma F_Q \Delta L$ $\delta_{a-b}^{\nearrow\swarrow}$ = rel. mov. a and b together	
5. Rotation of a truss bar	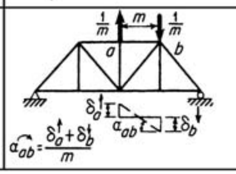	$\left(\frac{1}{m}\right)(\delta_a^{\uparrow}) + \left(\frac{1}{m}\right)(\delta_b^{\downarrow}) + \mathcal{W}_R = \Sigma F_Q \Delta L$ $\left(\frac{1}{m}\right)(\delta_a^{\uparrow} + \delta_b^{\downarrow}) + \mathcal{W}_R = 0$ $(1)(\alpha_{a-b}^{\frown}) + \mathcal{W}_R = \Sigma F_Q \Delta L$	

where,

W_R represents the virtual work done by the Q reactions if the support points move and could be evaluated numerically if such movements were known.

If the supports are unyielding, $W_R = 0$ and

$$(1)(\delta_c) = \sum F_Q F_P \frac{L}{A_s E} \tag{10.41}$$

The bar forces F_Q and F_P due to the Q- and P-load systems, respectively, can easily be computed. These data combined with the given values of L, A and E give us enough information to evaluate the right-hand side of the above equation and therefore to solve for the unknown value of δc.

Table 10.2 shows how to select suitable Q systems for use in the computation of the deflection components that may be required. Note that one has to simply select the virtual Q-force system in such a way that the desired deflection is the only unknown δ appearing on the left hand side of the equation. Worry about the deflection produced by the Q system.

D.E.10.1 EXAMPLE ON JOINT DEFLECTION

A truss in Fig. (10.6) supports the travelator at the edge of the travel. The truss is loaded as shown. Compute the horizontal component of the deflection of joint E due to the load shown.

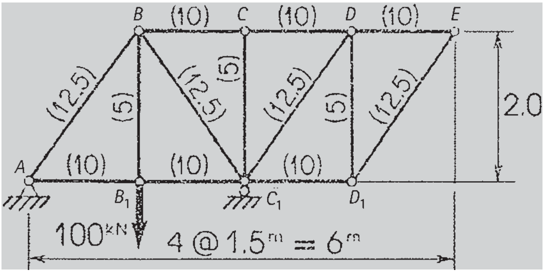

Figure 10.6. Cross-sectional areas in cm^2 shown in parentheses.

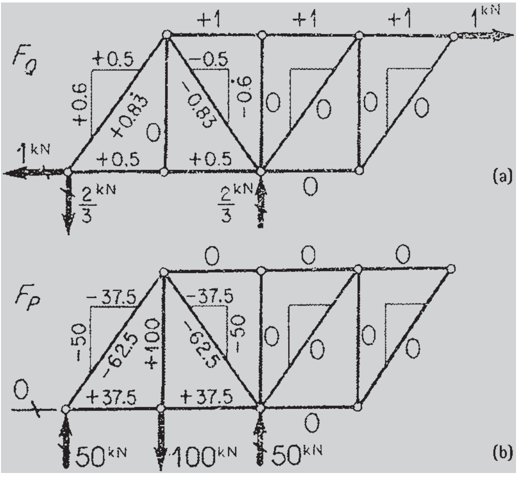

Figure 10.7. Force diagrams.

Bar	L m	A cm^2	L/A m/cm^2	F_Q kN	F_P kN	F_QF_PL/A kN^2·m/cm^2
AB_1	1.5	10	0.15	+0.5	+37.5	+2.813
B_1C_1	1.5	10	0.15	+0.5	+37.5	+2.813
AB	2.5	12.5	0.2	+0.83	−62.5	−10.417
BC_1	2.5	12.5	0.2	−0.83	−62.5	−10.417
$\sum$						+5.625

$$\sum Q\delta = \sum F_Q \Delta L = \sum F_Q F_P \frac{L}{A_s E} \tag{10.42}$$

$$(1\text{kN})\,(\vec{\delta}_E) = \frac{1}{E}\sum F_Q F_P \frac{L}{A_s}$$

$$= \frac{+5.625\,\text{kN}^2\text{m/cm}^2}{20.7\times 10^3\,\text{kN/cm}^2}$$

$$\therefore\ \delta_E = +0.00027174\,\text{m}$$

$$\therefore\ \text{to right}$$

Since:

$\theta \approx \delta/R$. Therefore the following theorem may be stated:

If a rigid body is rotated about some centre O through some small angle θ the component of the displacement of a point m along some direction XX through that point is equal to the angle θ times the perpendicular distance from O to the line XX.

Applied to the above truss,

$$\theta = \frac{0.005\,\text{m}}{3\,\text{m}}$$

Therefore, the horizontal movement of E during the rotation about O is:

$$\frac{0.005\,\text{m}}{3\,\text{m}}(2\,\text{m}) = 0.003\,\text{m}$$

D.E.10.2 EXAMPLE ON RELATIVE DEFLECTIONS OF JOINTS ALONG THE LINE JOINING TWO JOINTS UNDER LOADS AND TEMPERATURE EFFECTS

Compute the relative deflections of joints b and D along the line joining them due to the following causes:

(a) The loads shown.
$E = 207{,}000\,\text{MPa} = 20.7 \times 10^3\,\text{kN/cm}^2$
(b) An increase in temperature of 40°C in the top chord; a decrease of 10°C in the bottom chord.

$$\alpha_t = 1/75{,}000 \text{ per}^\circ C.$$

(a) $\sum Q\delta = \sum F_Q \Delta L = \sum F_Q F_P \dfrac{L}{A_s E}$ (10.43)

$$(1\,\text{kN})\left(\vec{\delta}_b\right) + (1\,\text{kN})\,(\delta_D) = \frac{1}{E}\sum F_Q F_P \frac{L}{A_s}$$
$$(1\,\text{kN})\left(\overleftrightarrow{\delta}_{b-D}\right) = \frac{1.1075\,\text{kN}^2\text{m/cm}^2}{20.7 \times 10^3\,\text{kN/cm}^2}$$
$$\therefore \overleftrightarrow{\delta}_{b-D} = +5.34966 \times 10^{-5}\,\text{m}$$
$\therefore$ together

(b) $\sum Q\delta = \sum F_Q \Delta L = \sum F_Q \alpha_t t L = \alpha_t \sum F_Q t L$ (10.44)

$$\left(1^{\text{kN}}\right)(\delta_{b-D}) = \left(13.3 \times 10^{-6}\right)/^\circ C\left(-74.76^{\text{kN}\cdot{}^\circ\text{C}\cdot\text{m}}\right)$$
$$\therefore \overleftrightarrow{\delta}_{b-D} = -9.968 \times 10^{-4}\,\text{m}$$
$\therefore$ apart

D.E. 10.3 A TYPICAL GIRDER TRUSS LOAD AS SHOWN IN FIGS (12.8) AND (12.11).

Using flexibility method, compute forces from the travelator loads in cases shown below:

$$\Delta_B = \Delta_{BD} + X_B\delta_{BB} + X_C\delta_{BC} = 0 \tag{10.45}$$
$$\Delta_C = \Delta_{CD} + X_B\delta_{CB} + X_C\delta_{CC} = 0 \tag{10.46}$$

From either the method of virtual work or the geometry of the adjacent sketch,

$$\Delta_{BD} = -0.000667 \text{ radian}$$
$$\Delta_{CD} = -0.003444 \text{ radian}$$
$$\delta_{BB} = \frac{6.667\,\text{kNm}^2}{EI_1} \quad \delta_{CC} = \frac{4.667\,\text{kNm}^2}{EI_1}$$
$$\delta_{BC} = \delta_{CB} = \frac{0.833\,\text{kNm}^2}{EI_1}$$

Upon substituting these values, the equations become,

$$6.667X_B + 0.833X_C = 0.000667EI_1$$
$$0.833X_B + 4.667X_C = 0.003444EI_1$$

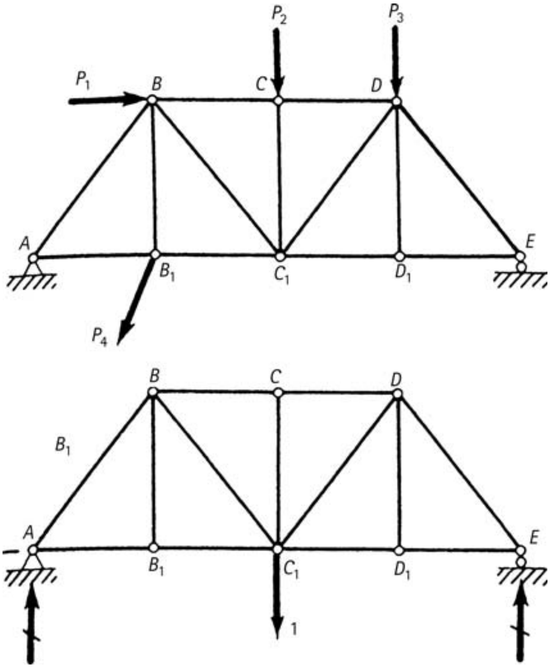

Figure 10.8. Pin-joint. Truss under loads.

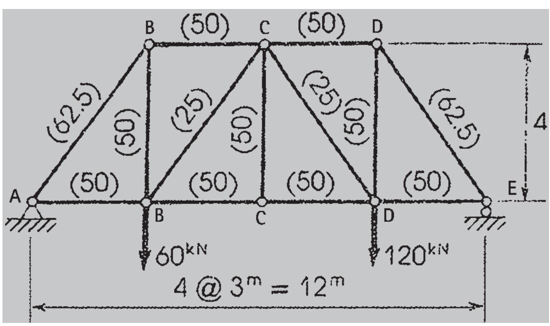

Figure 10.9. Cross-sectional areas in cm^2 shown in brackets.

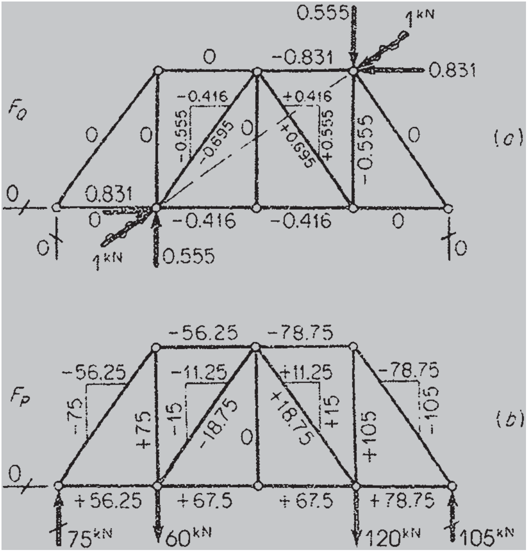

Figure 10.10. Forces in members of the trusses.

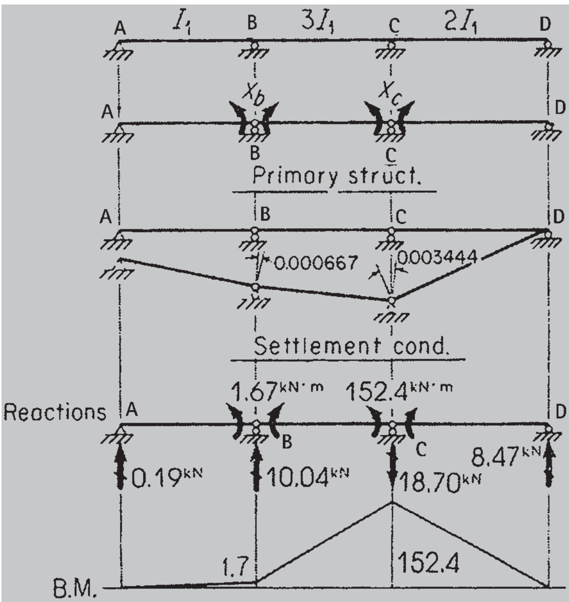

Figure 10.11. Supporting girder under heavy loaded travelators.

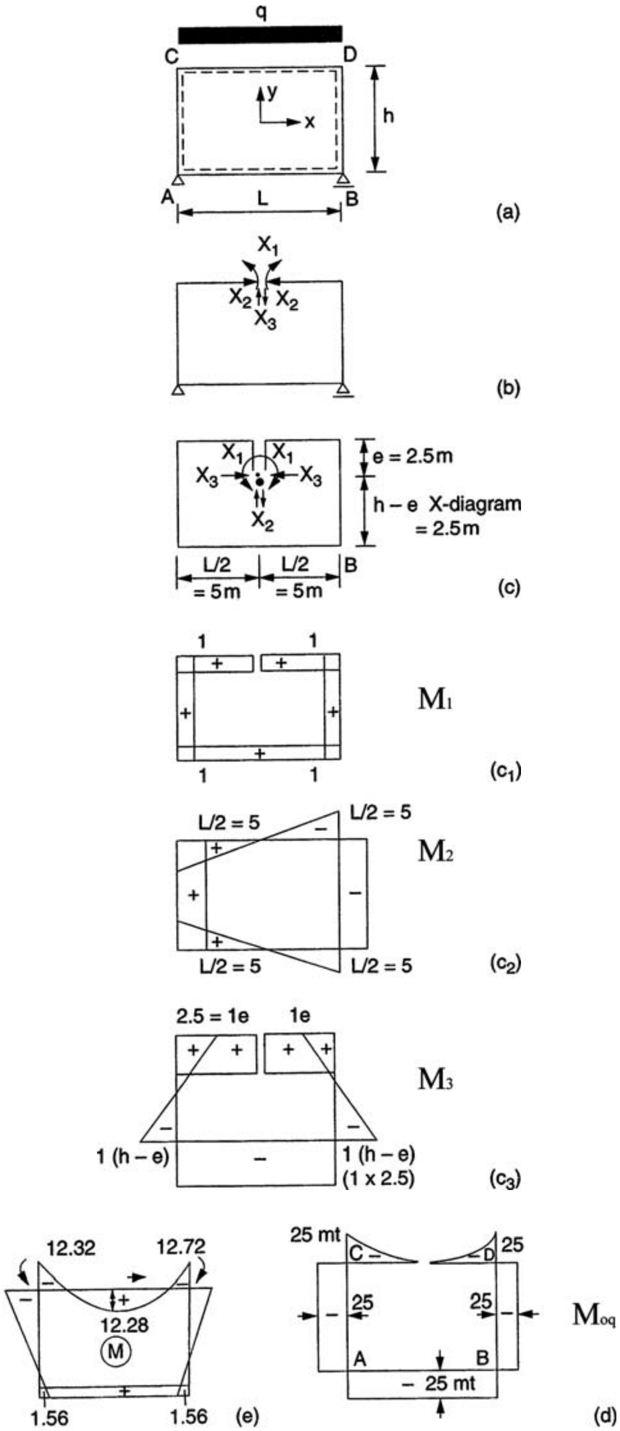

Figure 10.12. A supporting box chamber with flexibility diagrams.

Table 10.3. Tabulated results from flexibility analysis.

Bar	L (m)	A (cm^2)	L/A (m/cm^2)	F_Q (kN)	F_P (kN)	F_QF_PL/A (kN^2·m/cm^2)	t (°C)	F_QtL (kN·°C·m)
B_1C_1	3	50	0.06	−0.416	+67.5	−1.6848	−10	12.48
C_1D_1	3	50	0.06	−0.416	+67.5	−1.6848	−10	12.48
CD	3	50	0.06	−0.831	−78.75	+3.9265	+40	−99.72
B_1C	5	25	0.20	−0.695	−18.75	+2.6063	0	0
CD_1	5	25	0.20	−0.695	+18.75	+2.6063	0	0
D_1D	4	50	0.08	−0.555	+105	−4.6620	0	0
$\sum$						+1.1075		−74.76

Note: The same problems can be solved by reciprocity principles such as Bellis law and Maxwell's law which can be translated into flexibility or stiffness methods.

from which since

$$EI_1 = \left(207 \times 10^6\right) \text{ kN/m}^2 \left(10^{-3}\right) \text{ m}^4 = \left(0.207 \times 10^6\right) \text{ kNm}$$

The values of X_B and X_C are computed:

$$X_B = +0.00000802EI_1 = +1.66\,\text{kNm}$$
$$X_C = +0.000736EI_1 = +152.4\,\text{kNm}$$

The reactions and bending-moment diagram can now easily be computed in Fig. (10.11).

D.E. 10.4

A supporting box structure shown in Fig. (10.12) with constant cross-section is loaded with a portion of placing three travelators loading occurring on the top CD. Assuming $q = 2$ kN/m, $L = 10$ m and h is 5 m, calculate moments at A, B, C and D. Treat the moments above the surface while the interior of the box is used as a maintenance chamber as well. Use the flexibility method for E, I constant, the elastic centre method is adopted, where:

$$e = \frac{h}{2} = \frac{5}{2} = 2.5$$

Various flexibility diagrams are drawn, indicating various flexibility coefficients. Using Table 10.3.

$$M_0 \text{ (at C, D, A and B)} = \frac{qL^2}{8} = 25\,\text{kNm}$$

$$f_{11} = (10 \times 1 \times 1) + 2\,(5 \times 1 \times 1) = 30$$

$$f_{22} = 2\,(5 \times 5 \times 5) + \frac{2}{3} \times 5 \times 5 \times 5 \times 2 = \frac{1250}{3}$$

$$f_{33} = 2 \times 10 \times 2.5^2 + \frac{4}{3} \times 2.5 \times 2.5^2 = 145.8$$

$$f_{21} = f_{12} = 0;\ f_{13} = f_{31} = 0;\ f_{23} = f_{32} = 0$$

$$D_{10} = \int \frac{M_1M_0}{EI}\text{d}s = -\frac{2}{3} \times 5 \times 25 \times 1 - 2 \times 5 \times 25 \times 1 - 10 \times 25 \times 1$$
$$= -\frac{7}{6} \times 250 = \frac{1750}{6}$$

$$D_{20} = 0$$

$$D_{30} = 10 \times 2.5 \times 25 - \frac{10}{3} \times 2.5 \times 25 = \frac{1250}{3}$$

$$X_1 = -\frac{D_{10}}{f_{11}} = 19.42\,\text{kNm}$$

$$X_2 = 0; \quad X_3 = -\frac{D_{30}}{f_{33}} = -2.85\,\text{kN}$$

$$M = M_0 + M_1 X_1 + M_2 X_2 + M_3 X_3$$

$$M_C = -12.72\,\text{kNm}$$

$$M_D = -12.72\,\text{kNm}$$

$$M_A = +1.56\,\text{kNm} = M_B.$$

Appendix I

Supporting Analyses and Computer Programs using Finite Element

Appendix I

IA Material and Structural Matrices For Finite Element Analysis

Table AIA.1. [D] — Variable Young's modulus and constant Poisson's ratio

$$
\begin{array}{llllll}
D_{11} = \dfrac{E_1(E')^3 - E_{cr}}{\nu''} & D_{12} = \dfrac{\nu E_1 E_2 (E')^2 + E_{cr}}{\nu''} & D_{13} = \dfrac{\nu E_1 E_3 (E')^2 + E_{cr}}{\nu''} & D_{14} = 0 & D_{15} = 0 & D_{16} = 0 \\
 & D_{22} = \dfrac{E_2 E_3 (E')^2 + E_{cr}}{\nu''} & D_{23} = \dfrac{\nu E_2 E_3 (E')^2 + E_{cr}}{\nu''} & D_{24} = 0 & D_{25} = 0 & D_{26} = 0 \\
 & & D_{33} = \dfrac{E_3(E')^3 - E_{cr}}{\nu''} & D_{34} = 0 & D_{35} = 0 & D_{36} = 0 \\
 & & & D_{44} = G_{12} & D_{45} = 0 & D_{46} = 0 \\
 & & & & D_{55} = G_{23} & D_{56} = 0 \\
 & & & & & D_{66} = G_{31}
\end{array}
$$

$$
\begin{aligned}
E_{cr} &= \nu^2 E_1 E_2 E_3 E' \\
E' &= (E_1 + E_2 + E_3)/3 \\
\nu'' &= (E')^3 - 2E_1 E_2 E_3 \nu^2 - E'\nu^2(E_1 E_2 + E_1 E_3 + E_2 E_3) \\
G_{12} &= E_{12}/2(1+\nu) \\
E_{12} &= (E_1 + E_2)/2 \\
G_{23} &= E_{23}/2(1+\nu) \\
E_{23} &= (E_2 + E_3)/2 \\
G_{31} &= E_{31}/2(1+\nu) \\
E_{31} &= (E_3 + E_1)/2
\end{aligned}
$$

Table AIA.2. [D] — Variable Young's modulus and Poisson's ratio

$$
\begin{bmatrix}
D_{11} = \dfrac{(1-\nu_{23}\nu_{32})}{\bar{\nu}} E_1 & D_{12} = \dfrac{(\nu_{12}+\nu_{12}\nu_{32})}{\bar{\nu}} E_2 & D_{13} = \dfrac{(\nu_{13}+\nu_{12}\nu_{23})}{\bar{\nu}} E_3 & D_{14} = 0 & D_{15} = 0 & D_{16} = 0 \\
D_{21} = \dfrac{(\nu_{21}+\nu_{23}\nu_{31})}{\bar{\nu}} E_1 & D_{22} = \dfrac{(1-\nu_{13}\nu_{31})}{\bar{\nu}} E_2 & D_{23} = \dfrac{(\nu_{23}+\nu_{13}\nu_{21})}{\bar{\nu}} E_3 & D_{24} = 0 & D_{25} = 0 & D_{26} = 0 \\
D_{31} = \dfrac{(\nu_{31}+\nu_{21}\nu_{32})}{\bar{\nu}} E_1 & D_{32} = \dfrac{(\nu_{32}+\nu_{12}\nu_{31})}{\bar{\nu}} E_2 & D_{33} = \dfrac{(1-\nu_{12}\nu_{21})}{\bar{\nu}} E_3 & D_{34} = 0 & D_{35} = 0 & D_{36} = 0 \\
D_{41} = 0 & D_{42} = 0 & D_{43} = 0 & D_{44} & D_{45} = 0 & D_{46} = 0 \\
D_{51} = 0 & D_{52} = 0 & D_{53} = 0 & D_{54} = 0 & D_{55} & D_{56} = 0 \\
D_{61} = 0 & D_{62} = 0 & D_{63} = 0 & D_{64} = 0 & D_{65} = 0 & D_{66}
\end{bmatrix}
$$

$$\bar{\nu} = 1 - \nu_{12}\nu_{21} - \nu_{13}\nu_{31} - \nu_{23}\nu_{32} - \nu_{12}\nu_{23}\nu_{31} - \nu_{21}\nu_{13}\nu_{32}$$

Table AIA.2. *continued*.

Due to symmetry of compliances, the following relations can be written:

$$E_1\nu_{21} = E_2\nu_{12} \qquad D_{55} = G_{23}$$
$$E_2\nu_{32} = E_3\nu_{23} \qquad D_{66} = G_{13}$$
$$E_3\nu_{13} = E_1\nu_{31}$$

The values of G_{12}, G_{23} and G_{13} are calculated in terms of modulus of elasticity and Poisson's ratio as follows:

$$G_{12} = \frac{1}{2}\left[\frac{E_1}{2(1+\nu_{12})} + \frac{E_2}{2(1+\nu_{21})}\right] = \frac{1}{2}\left[\frac{E_1}{2(1+\nu_{12})} + \frac{E_1}{2\left(\frac{E_1}{E_2}+\nu_{12}\right)}\right]$$

$$G_{23} = \frac{1}{2}\left[\frac{E_2}{2(1+\nu_{23})} + \frac{E_3}{2(1+\nu_{32})}\right] = \frac{1}{2}\left[\frac{E_2}{2(1+\nu_{23})} + \frac{E_2}{2\left(\frac{E_2}{E_3}+\nu_{23}\right)}\right]$$

$$G_{13} = \frac{1}{2}\left[\frac{E_3}{2(1+\nu_{31})} + \frac{E_1}{2(1+\nu_{13})}\right] = \left[\frac{E_3}{2(1+\nu_{31})} + \frac{E_2}{2\left(\frac{E_3}{E_1}+\nu_{31}\right)}\right]$$

For isotropic cases;

$$E_1 = E_2 = E_3 = E$$
$$\nu_{12} = \nu_{13} = \nu_{23} = \nu_{21} = \nu_{31} = \nu_{32} = \nu$$

[D] — Constant Young's modulus and Poisson's ratio

$$[D] = \frac{E}{(1+\nu)(1-2\nu)}\begin{bmatrix} 1-\nu & \nu & \nu & 0 & 0 & 0 \\ \nu & 1-\nu & \nu & 0 & 0 & 0 \\ \nu & \nu & 1-\nu & 0 & 0 & 0 \\ 0 & 0 & 0 & \frac{1-2\nu}{2} & 0 & 0 \\ 0 & 0 & 0 & 0 & \frac{1-2\nu}{2} & 0 \\ 0 & 0 & 0 & 0 & 0 & \frac{1-2\nu}{2} \end{bmatrix}$$

Bulk and shear moduli

$$[D] = \begin{bmatrix} K+\frac{4}{3}G & K-\frac{2}{3}G & K-\frac{2}{3}G & 0 & 0 & 0 \\ K-\frac{2}{3}G & K+\frac{4}{3}G & K-\frac{2}{3}G & 0 & 0 & 0 \\ K-\frac{2}{3}G & K-\frac{2}{3}G & K+\frac{4}{3}G & 0 & 0 & 0 \\ 0 & 0 & 0 & G & 0 & 0 \\ 0 & 0 & 0 & 0 & G & 0 \\ 0 & 0 & 0 & 0 & 0 & G \end{bmatrix}$$

Table AIA.2. *continued*.

For plane stress

$$[D] = \frac{E}{1-\nu^2}\begin{bmatrix} 1 & \nu & 0 \\ \nu & 1 & 0 \\ 0 & 0 & \frac{1-\nu}{2} \end{bmatrix}$$

For plane strain

$$[D] = \frac{E(1-\nu)}{(1+\nu)(1-2\nu)}\begin{bmatrix} 1 & \frac{\nu}{1-\nu} & 0 \\ \frac{\nu}{1-\nu} & 1 & 0 \\ 0 & 0 & \frac{1-2\nu}{2(1-\nu)} \end{bmatrix}$$

For axisymmetric cases

$$[D] = \frac{E}{(1+\nu)(1-2\nu)}\begin{bmatrix} 1-\nu & \nu & \nu & 0 \\ \nu & 1-\nu & \nu & 0 \\ \nu & \nu & 1-\nu & 0 \\ 0 & 0 & 0 & \frac{1-2\nu}{2} \end{bmatrix}$$

Table AIA.3. Two-dimensional elastic beam (courtesy STRUCOM, London)

Element matrices and load vectors

The element stiffness matrix in element co-ordinates is:

$$[K_1] = \begin{bmatrix} \frac{AE}{L} & 0 & 0 & -\frac{AE}{L} & 0 & 0 \\ 0 & \frac{12EI}{L^3(1+\phi')} & \frac{6EI}{L^2(1+\phi')} & 0 & -\frac{12EI}{L^3(1+\phi')} & \frac{6EI}{L(1+\phi')} \\ 0 & \frac{6EI}{L^2(1+\phi')} & \frac{EI(4+\phi')}{L(1+\phi')} & 0 & -\frac{6EI}{L^2(1+\phi')} & \frac{EI(2-\phi')}{L(1+\phi')} \\ -\frac{AE}{L} & 0 & 0 & \frac{AE}{L} & 0 & 0 \\ 0 & -\frac{12EI}{L^3(1+\phi')} & \frac{6EI}{L^2(1+\phi')} & 0 & \frac{12EI}{L^3(1+\phi')} & -\frac{6EI}{L^2(1+\phi')} \\ 0 & \frac{6EI}{L^2(1+\phi')} & \frac{EI(2-\phi')}{L(1+\phi')} & 0 & -\frac{6EI}{L^2(1+\phi')} & \frac{EI(4+\phi')}{L(1+\phi')} \end{bmatrix}$$

where

A = cross-sectional area

E = Young's modulus

L = element length

I = moment of inertia

$\phi' = \frac{12EI}{GA^s L^2}$

G = shear modulus

$A^s = \frac{A}{F^s}$ = shear area

F^s = shear deflection constant

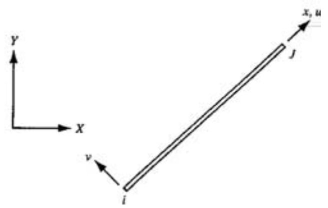

Fig. AIA.1. Two-dimensional beam element centroidal axis

For uniform lateral pressure

$P_1 = P_4 = 0$

$P_2 = P_5 = -\frac{PL}{2}$

$P_3 = -P_6 = -\frac{PL^2}{12}$

P = uniform applied pressure (units = force/length)

Stress calculations

The centroidal stress at end i is:

$$\sigma_i^{\text{dir}} = \frac{F_{x,i}}{A}$$

where

σ_i^{dir} = centroidal stress

$F_{x,i}$ = axial force

The bending stress is

$$\sigma_i^{\text{bnd}} = \frac{M_i t}{2I}$$

where

σ_i^{bnd} = bending stress at end i

M_i = moment at end i

t = thickness of beam in element z direction

Table AIA.4. Three-dimensional elastic beam (courtesy STRUCOM, London)

Element matrices and load vectors

All element matrices and load vectors are generated in the element co-ordinate system and must subsequently then be converted to the global co-ordinate system. The element stiffness matrix is:

$$[K_l] = \frac{AE}{L}\begin{bmatrix} C_1 & 0 & 0 & -C_1 & 0 & 0 \\ 0 & 0 & 0 & 0 & 0 & 0 \\ 0 & 0 & 0 & 0 & 0 & 0 \\ -C_1 & 0 & 0 & C_1 & 0 & 0 \\ 0 & 0 & 0 & 0 & 0 & 0 \\ 0 & 0 & 0 & 0 & 0 & 0 \end{bmatrix}$$

where

A = element cross-sectional area

E = Young's modulus

L = element length

C_1 = value given in the table below.

The element mass matrix is the same as the element stress stiffness matrix:

$$[S_l] = \frac{F}{L}\begin{bmatrix} 0 & 0 & 0 & 0 & 0 & 0 \\ 0 & C_2 & 0 & 0 & -C_2 & 0 \\ 0 & 0 & C_2 & 0 & 0 & -C_2 \\ 0 & 0 & 0 & 0 & 0 & 0 \\ 0 & -C_2 & 0 & 0 & C_2 & 0 \\ 0 & 0 & -C_2 & 0 & 0 & C_2 \end{bmatrix}$$

Value of stiffness coefficient (C_1)

Previous iteration resulted in a tensile stress	Previous iteration resulted in a compressive stress
1.0	0.0
1.0	1.0×10^{-6}
0.0	1.0
1.0×10^{-6}	1.0

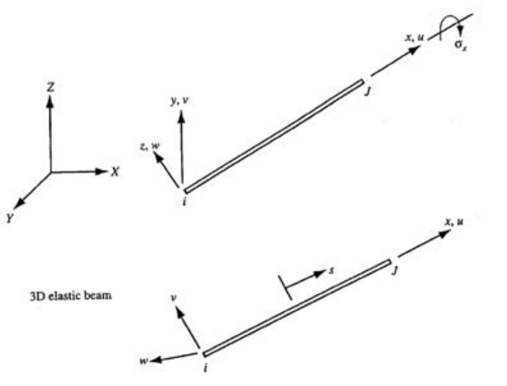

Fig. AIA.2. Three-dimensional elastic beam.

Table AIA.5. Stiffness and mass matrices (courtesy STRUCOM, London)

Orders of degrees of freedom

The stiffness matrix in element co-ordinates is:

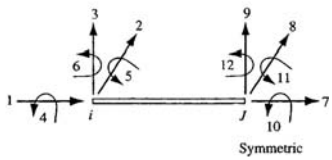

Fig. AIA.3. Order of degrees of freedom.

$$
[K_1] = \begin{bmatrix}
AE/L & & & & & & & & & & & \\
0 & a_z & & & & & & & & & & \\
0 & 0 & a_y & & & & & & & & & \\
0 & 0 & 0 & GJ/L & & & & & & \text{Symmetric} & & \\
0 & 0 & d_y & 0 & e_y & & & & & & & \\
0 & c_z & 0 & 0 & 0 & e_z & & & & & & \\
-AE/L & 0 & 0 & 0 & 0 & 0 & AE/L & & & & & \\
0 & b_z & 0 & 0 & 0 & d_z & 0 & a_z & & & & \\
0 & 0 & b_y & 0 & c_y & 0 & 0 & 0 & a_y & & & \\
0 & 0 & 0 & -GJ/L & 0 & 0 & 0 & 0 & 0 & GJ/L & & \\
0 & 0 & d_y & 0 & f_y & 0 & 0 & 0 & c_z & 0 & e_y & \\
0 & c_z & 0 & 0 & 0 & f_z & 0 & d_y & 0 & 0 & 0 & e_z
\end{bmatrix}
$$

where

A = cross-sectional area

E = Young's modulus

L = element length

G = shear modulus

$r_y = \sqrt{\dfrac{I_{yy}}{A}}$ = radius of gyration

$r_z = \sqrt{\dfrac{I_{zz}}{A}}$ = radius of gyration

$M_t = (\rho A + m)L(1 - \varepsilon^{\text{in}})$

ρ = density

m = added mass

ε^{in} = prestrain

$A_z = A(r_z, \phi'_y)$

$A_y = A(r_y, \phi'_z)$

$B_z = B(r_z, \phi'_y)$

$\vdots$

$F_z = F(r_z, \phi'_y)$

$F_y = F(r, \phi'_z)$

$$
[M_1] = M_t \begin{bmatrix}
1/3 & & & & & & & & & & & \\
0 & A_z & & & & & & & & & & \\
0 & 0 & A_y & & & & & & & & & \\
0 & 0 & 0 & J_x/3A & & & & & & \text{Symmetric} & & \\
0 & 0 & -C_y & 0 & E_y & & & & & & & \\
0 & C_z & 0 & 0 & 0 & E_z & & & & & & \\
1/6 & 0 & 0 & 0 & 0 & 0 & 1/3 & & & & & \\
0 & B_z & 0 & 0 & 0 & D_z & 0 & A_z & & & & \\
0 & 0 & B_y & 0 & -D_y & 0 & 0 & 0 & A_y & & & \\
0 & 0 & 0 & J_x/6A & 0 & 0 & 0 & 0 & 0 & J_x/3A & & \\
0 & 0 & D_y & 0 & F_y & 0 & 0 & 0 & C_y & 0 & E_y & \\
0 & -D_z & 0 & 0 & 0 & F_z & 0 & -C_z & 0 & 0 & 0 & E_z
\end{bmatrix}
$$

and where

$$A(r,\phi') = \frac{13/35 + 7/10\phi' + 1/3\phi'^2 + 6/5(r/L)^2}{(1+\phi')^2}$$

$$B(r,\phi') = \frac{9/70 + 3/10\phi' + 1/6\phi'^2 - 6/5(r/L)^2}{(1+\phi')^2}$$

$$C(r,\phi') = \frac{(11/210 + 11/120\phi' + 1/24\phi'^2 + (1/10 - 1/2\phi')(r/L)^2)L}{(1+\phi')^2}$$

$$D(r,\phi') = \frac{(13/420 + 3/40\phi' + 1/24\phi'^2 - (1/10 - 1/2\phi')(r/L)^2)L}{(1+\phi')^2}$$

$$E(r,\phi') = \frac{(1/105 + 1/60\phi' + 1/120\phi'^2 + (2/15 + 1/6\phi' + 1/3\phi'^2)(r/L)^2)L^2}{(1+\phi')^2}$$

$$F(r,\phi') = -\frac{(1/140 + 1/60\phi' + 1/120\phi'^2 + (1/30 + 1/6\phi' - 1/6\phi'^2)(r/L)^2)L^2}{(1+\phi')^2}$$

$$J = \text{torsional moment of inertia} = \begin{Bmatrix} J_x & \text{if } I_x = 0 \\ I_x & \text{if } I_x \neq 0 \end{Bmatrix}$$

I_x = input as IXX

J_x = polar moment of inertia $= I_y + I_z$

The element mass matrix in element co-ordinates is:

$$[M_l] = (\rho A + m)L(1 - \varepsilon^{\text{in}})$$

$$\times \begin{bmatrix} 1/3 & 0 & 0 & 1/6 & 0 & 0 \\ 0 & A(r,\phi') & C(r,\phi') & 0 & B(r,\phi') & -D(r,\phi') \\ 0 & C(r,\phi') & E(r,\phi') & 0 & D(r,\phi') & -F(r,\phi') \\ 1/6 & 0 & 0 & 1/3 & 0 & 0 \\ 0 & B(r,\phi') & D(r,\phi') & 0 & A(r,\phi') & -C(r,\phi') \\ 0 & -D(r,\phi') & -F(r,\phi') & 0 & -C(r,\phi') & E(r,\phi') \end{bmatrix}$$

where

ρ = density

m = added m

ε^{in} = prestrain

$$A(r,\phi') = \frac{13/35 + 7/10\phi' + 1/3\phi'^2 + 6/5(r/L)^2}{(1+\phi')^2}$$

$$B(r,\phi') = \frac{9/70 + 3/10\phi' + 1/6\phi'^2 - 6/5(r/L)^2}{(1+\phi')^2}$$

$$C(r,\phi') = \frac{(11/210 + 11/120\phi' + 1/24\phi'^2 + (1/10 - 1/2\phi')(r/L)^2)L}{(1+\phi')^2}$$

$$D(r,\phi') = \frac{(13/420 + 3/40\phi' + 1/24\phi'^2 - (1/10 - 1/2\phi')(r/L)^2)L}{(1+\phi')^2}$$

$$E(r,\phi') = \frac{(1/105 + 1/60\phi' + 1/120\phi'^2 + (2/15 + 1/6\phi' + 1/3)(r/L)^2)L^2}{(1+\phi')^2}$$

$$F(r,\phi') = \frac{(1/140 + 1/60\phi' + 1/120\phi'^2 + (1/30 + 1/6\phi' + 1/6\phi'^2)(r/L)^2)L^2}{(1+\phi')^2}$$

$$r = \sqrt{\frac{I}{A}} = \text{radius of gyration}$$

Appendix IB: Element Types, Shape Function, Derivatives, Stiffness Matrices

Table AIB.1. [K] — Shear and torsion included for line element

$$
[D] = \begin{bmatrix}
\frac{EA}{L} \\
0 & \frac{12EI_\xi}{L^3(1+\bar{\tau}_\eta)} \\
0 & 0 & \frac{12EI_\xi}{L^3(1+\bar{\tau}_\xi)} \\
0 & 0 & 0 & \frac{GJ}{L} \\
0 & 0 & \frac{-6EI_\eta}{L^2(1+\tau_\xi)} & 0 & \frac{(4+\bar{\tau}_\xi)EI_\eta}{L(1+\bar{\tau}_\eta)} \\
0 & \frac{6EI_\xi}{L^2(1+\bar{\tau}_\eta)} & 0 & 0 & 0 & \frac{(4+\bar{\tau}_\eta)EI_\xi}{L(1+\bar{\tau}_\eta)} \\
\frac{-EA}{L} & 0 & 0 & 0 & 0 & 0 & \frac{AE}{L} \\
0 & \frac{-12EI_\xi}{L^3(1+\bar{\tau}_\eta)} & 0 & 0 & 0 & \frac{-6EI_\xi}{L^2(1+\bar{\tau}_\eta)} & 0 & \frac{12EI_\xi}{L^3(1+\bar{\tau}_\eta)} \\
0 & 0 & \frac{-12EI_\eta}{L^3(1+\bar{\tau}_\xi)} & 0 & \frac{6EI_\eta}{L^2(1+\bar{\tau}_\xi)} & 0 & 0 & 0 & \frac{12EI_\eta}{L^3(1+\bar{\tau}_\xi)} \\
0 & 0 & 0 & \frac{-GJ}{L} & 0 & 0 & 0 & 0 & 0 & \frac{GJ}{L} \\
0 & 0 & \frac{-6EI_\eta}{L^2(1+\bar{\tau}_\xi)} & 0 & \frac{(2-\bar{\tau}_\xi)EI_\eta}{L(1+\bar{\tau}_\xi)} & 0 & 0 & 0 & \frac{6EI_\eta}{L^2(1+\bar{\tau}_\xi)} & 0 & \frac{(4+\bar{\tau}_\xi)EI_\eta}{L(1+\bar{\tau}_\xi)} \\
0 & \frac{6EI_\xi}{L^2(1+\bar{\tau}_\eta)} & 0 & 0 & 0 & \frac{(2-\bar{\tau}_\eta)EI_\xi}{L(1+\bar{\tau}_\eta)} & 0 & \frac{-6EI_\xi}{L^2(1+\bar{\tau}_\eta)} & 0 & 0 & 0 & \frac{(4+\bar{\tau}_\eta)EI_\xi}{L(1+\bar{\tau}_\eta)}
\end{bmatrix}
$$

where

$$\bar{\tau}_\eta = \frac{12EI_\xi}{GA_{s\eta}L^2} = 24(1+\nu)\frac{A}{A_{s\eta}}\left(\frac{T_\xi}{L}\right)^2 \qquad \bar{\tau}_\xi = \frac{12EI_\eta}{GA_{s\xi}L^2} = 24(1+\nu)\frac{A}{A_{s\xi}}\left(\frac{T_\eta}{L}\right)^2$$

A_s = shear area $\quad T$ = torsional moment of inertia $\quad \rho$ = density $\quad \xi, \eta$ local axes are parallel to Z and Y axes

The element pressure load vector in element coordinates is:

$$\{F_1^{pr}\} = \lfloor P_1 \quad P_2 \quad P_3 \quad P_4 \quad P_5 \quad P_6 \rfloor^T$$

Value of stress stiffness coefficient (C_2)

Previous iteration resulted in a tensile stress	Previous iteration resulted in a compressive stress
1.0	0.0
1.0	$\dfrac{AE}{F \times 10^6}$
0.0	1.0
$\dfrac{AE}{F \times 10^6}$	1.0

$$F = \begin{cases} \text{for the first iteration: } AE\varepsilon^{\text{in}} \\ \text{for all subsequent iterations: the axial force} \\ \text{in the element as computed in the previous} \\ \text{stress pass of the element (output quantity)} \\ \text{FORC} \end{cases}$$

C_2 = value given in the table above.

The matrix for the tension-only or compression-only spar is given by:

$$[M_1] = \frac{M_t}{2} \begin{bmatrix} 1 & & & & & & & & & & & \\ 0 & 1 & & & & & & & & & & \\ 0 & 0 & 1 & & & & & & & & & \\ 0 & 0 & 0 & 0 & & & & & & & & \\ 0 & 0 & 0 & 0 & 0 & & & \text{Symmetric} & & & & \\ 0 & 0 & 0 & 0 & 0 & 0 & & & & & & \\ 0 & 0 & 0 & 0 & 0 & 0 & 1 & & & & & \\ 0 & 0 & 0 & 0 & 0 & 0 & 0 & 1 & & & & \\ 0 & 0 & 0 & 0 & 0 & 0 & 0 & 0 & 1 & & & \\ 0 & 0 & 0 & 0 & 0 & 0 & 0 & 0 & 0 & 0 & & \\ 0 & 0 & 0 & 0 & 0 & 0 & 0 & 0 & 0 & 0 & 0 & \\ 0 & 0 & 0 & 0 & 0 & 0 & 0 & 0 & 0 & 0 & 0 & 0 \end{bmatrix}$$

Appendix IC: Dynamic Finite-Element Analysis

IC.1. FINITE-ELEMENT EQUATIONS

A three-dimensional finite-element analysis is developed in which a provision has been made for time-dependent plasticity and rupturing in steel and cracking in materials such as concrete, etc. The influence of steel liner and studs are included. Concrete, steel liners and studs are represented by solid isoparametric elements, shell elements and line elements with or without bond linkages. To begin with, a displacement finite element is adopted.

The displacement field within each element is defined in Figure 1 as

$$\{x\} = [N]\{x\}^{\mathrm{e}} = \sum_{i=1}^{n} (N_i[I]\{x\}_i) \tag{1}$$

The strains and stresses can then be expressed as

$$\{\epsilon\} = \sum_{i=1}^{n} ([B_i]\{x_i\}) = [D]\{\sigma\} \tag{2}$$

In order to maintain equilibrium with the element, a system of external nodal forces $\{\mathrm{F}\}^{\mathrm{e}}$ is applied which will reduce the virtual work (dW) to zero. In the general equilibrium equations both equations (1) and (2) are included. The final equation becomes

$$(\{\mathrm{d}\delta\}^{\mathrm{e}})^{\mathrm{T}}\{F\}^{\mathrm{e}} = (\{\mathrm{d}\delta\}^{\mathrm{e}})^{\mathrm{T}} \int_{\mathrm{vol}} [B]^{\mathrm{T}}\{\sigma\}\mathrm{d}V \tag{3}$$

In terms of the local co-ordinate (ξ, η, ζ) system, equation (3) is written as

$$\{F\}^{\mathrm{e}} = \int_{\mathrm{vol}} [B]^{\mathrm{T}}[D]\{\epsilon\}\mathrm{d}\xi.\mathrm{d}\eta.\mathrm{d}\zeta \quad \det[J]\{x\}^{\mathrm{c}} \tag{4}$$

The force-displacement relationship for each element is given by

$$\{F\}^{\mathrm{e}} = [K]^{\mathrm{c}}\{u\}^{\mathrm{e}} + \{F_{\mathrm{b}}\}^{\mathrm{e}} + \{F_{\mathrm{s}}\}^{\mathrm{e}} + \{F_{\sigma}\}_i^{\mathrm{e}} + \{F_{\epsilon}\}_c^{\mathrm{e}} \tag{5}$$

where the element stiffness matrix is

$$[K_{\mathrm{c}}] = \int_{vol} [B]^{\mathrm{T}}[D][B]\mathrm{d}V \tag{5a}$$

The nodal force due to the body force is

$$\{\mathrm{F_b}\}^{\mathrm{e}} = -\int_{\mathrm{vol}} [N]^{\mathrm{T}}\{G\}\mathrm{d}V \tag{5b}$$

The nodal force due to the surface force is

$$\{\mathrm{F_s}\}^{\mathrm{e}} = \int_{s} [N]^{\mathrm{T}}\{p\}\mathrm{d}s \tag{5c}$$

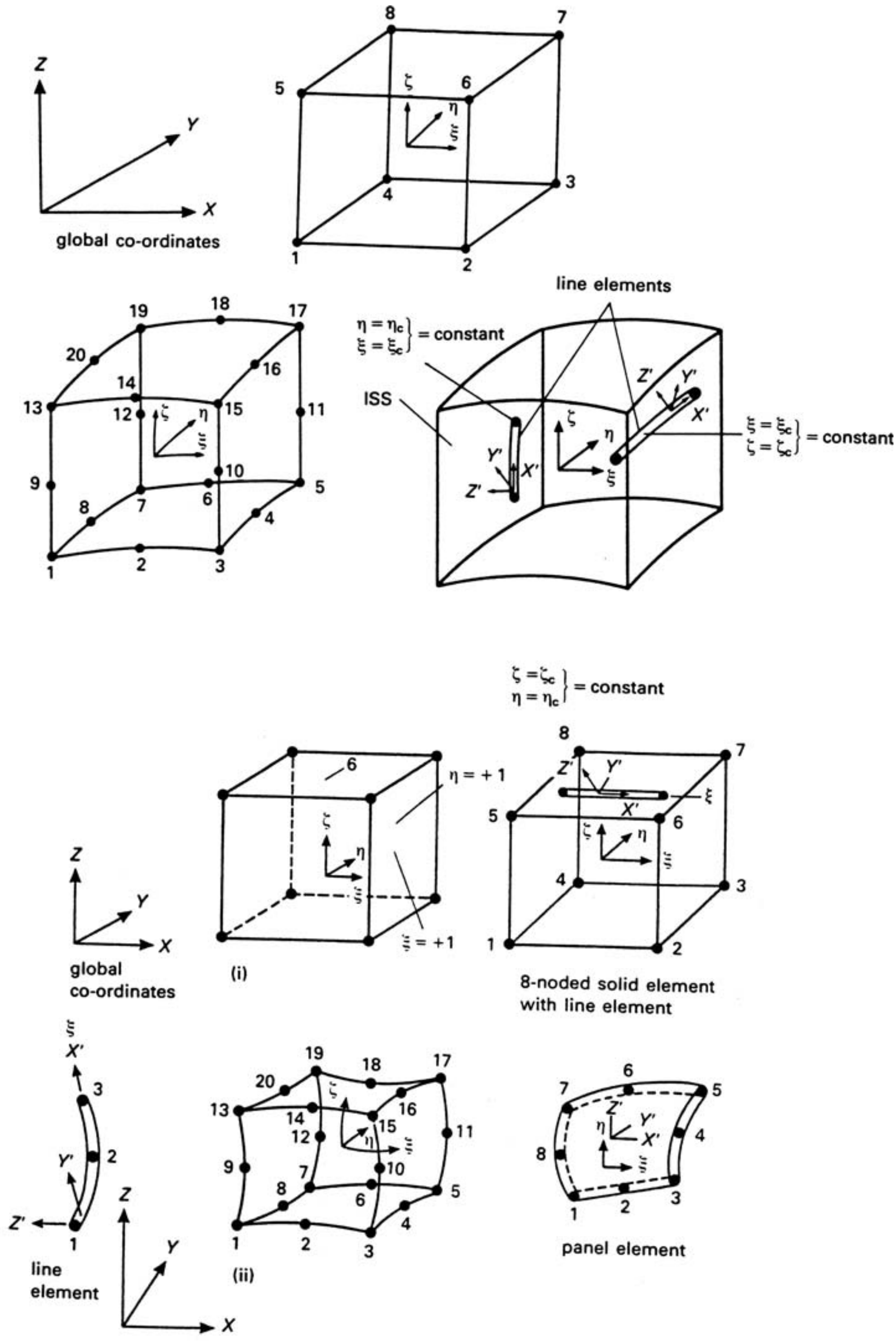

Fig. AIC.1. Types of elements used for the F.E. Mesh Schmes.

The nodal force due to the initial stress is

$$\{P_\sigma\}_i^e = \int_{\text{vol}} [B]^T \{\sigma_0\} \mathrm{d}V \tag{5d}$$

The nodal force due to the initial strain in

$$\{P_\epsilon\}_i^e = -\int_{\text{vol}} [B]^T [D] \{\epsilon_0\} \mathrm{d}V \tag{5e}$$

Equations (4) and (5) represent the relationships of the nodal loads to the stiffness and displacement of the structure. These equations now require modification to include the influence of the liner and its studs. The material compliance matrices [D] are given. The numerical values are given of the constitutive matrices are recommended in the absence of specific information.

If the stiffness matrix $[K_c]$ for typical elements is known from equations (6.4) and (6.5) as

$$[K_\mathrm{c}] = \int_{\text{vol}} [B]^\mathrm{T} [D][B] \mathrm{dvol} \tag{6}$$

The composite stiffness matrix $[K_{TOT}]$, which includes the influence of liner and stud or any other material(s) in association, can be written as

$$[K_{TOT}] = [K_c] + [K_l] + [K_s] \tag{7}$$

where $[K_l]$ and $[K_s]$ are the liner and stud or connector matrices.

If the initial and total load vectors on the liner/stud assembly and others are $[F_T]$ and $[R_T]$, respectively, then equation (4) is written as

$$\{F\}^\mathrm{e} + \{F_\mathrm{T}\} - \{R_\mathrm{T}\} = [K_\mathrm{TOT}]\{x\}^* \tag{8}$$

IC.2. STEPS FOR DYNAMIC NON-LINEAR ANALYSIS

The dynamic coupled equations are needed to solve the impact/explosion problems and to assess the response history of the structure, using the time increment δt. If [M] is the mass and [C] and [K] are the damping and stiffness matrices, the equation of motion may be written in incremental form as

$$[M]\{\ddot{x}(t)\} + [C_{\text{in}}]\{\dot{x}(t)\} + [K_{\text{in}}]\{\delta(t)\} = \{R(t)\} + \{F_1(t)\} \tag{9}$$

where F_1(t) is the impact/explosion load. If the load increment of F_1(t) is δP_n(t), where n is the nth load increment, then

$$P_n(t) = P_{n-1}(t) + \delta P_n(t) \tag{9a}$$

and hence $\{R(t)\} = \{\delta P_n(t)\}$, which is the residual time-dependent load vector. The solution of equation (9) in terms of $t + \delta t$ for a δt increment becomes

$$[M]\{\ddot{x}(t+\delta t)\} + [C_{\text{in}}]\{\dot{x}(t+\delta t)\} + [K_{\text{in}}]\{\delta R(t+\delta t)\} + \{\delta P(t+\delta t)\} \tag{10}$$

where ‘in’ denotes initial effects by interaction using the stress approach; $\delta P(t + \delta t)$ represents the non-linearity during the time increment δt and is determined by

$$\{\sigma\} = [D]\{\epsilon\} - \{\epsilon_0\} + \{\sigma_0\} \tag{11}$$

The constitutive law is used with the initial stress and constant stiffness approaches throughout the non-linear and the dynamic iteration. For the iteration:

$$\{x(t+\delta t)\}_i = [K_{\text{in}}]^{-1}\{R_{\text{TOT}}(t+\delta t)\}_i \tag{12}$$

The strains are determined using

$$\{\epsilon(t+\delta t)\}_i = [B]\{x(t+\delta t)\}_i \tag{13}$$

where [B] is the strain displacement. The stresses are computed as

$$\{\sigma(t+\delta t)\}_i = [D]\{\epsilon(t+\delta t)\}_i + \{\sigma_0(t+\delta t)\}_{i-1} \tag{14}$$

where $\{\sigma_0(t + \delta t)$ is the total initial stress at the end of each iteration. All calculations for stresses and strains are performed at the Gauss points of all elements.

The initial stress vector is given by

$$\{\sigma_0(t+\delta t)\}_i = f\{\epsilon(t+\delta t)\}_i - [D]\{\epsilon(t+\delta t)\}_i \tag{15}$$

Using the principles of virtual work, the change of equilibrium and nodal loads $\{\delta P(t + \delta t)_i$ is calculated as

$$\begin{aligned} F_1(t+\delta t) &= \{\delta P(t+\delta t))_{i\text{TOT}} \\ &= \int_{-1}^{+1}\int_{-1}^{+1}\int_{-1}^{+1} [B]^{\text{T}''}\{\delta\sigma_0(t+\delta t)\}_i \, \mathrm{d}\xi \, \mathrm{d}\eta \, \mathrm{d}\zeta \\ \sigma_0(t) &= \{\sigma_0(t+\delta t)\}_i = 0 \end{aligned} \tag{16}$$

where dξ, dη and dζ are the local co-ordinates and T$''$ is the transpose. The integration is performed numerically at the Gauss points. The effective load vector Fl(t) is given by

$$\begin{aligned} F_1(t+\delta t) &= \{\delta P(t+\delta t)\}_{i\mathrm{TOT}} \\ &= -[\delta C(t)_{\mathrm{in}}](\{x(t+\delta t)\}_i - \{x(t)\}) \\ &\quad -[\delta C(t+\delta t)]_i\{x(t+\delta t)\}_i \\ &\quad -[\delta K(t)_{\mathrm{in}}](\{x(t+\delta t)\}_i - \{x(t)\}_i) \\ &\quad -[\delta K(t+\delta t)]_i\{x(t+\delta t)\}_i \end{aligned} \tag{17}$$

The Von Mises criterion is used with the transitional factor f^*_{TR} to form the basis of the plastic state, such as shown in Figure AIC.2.

$$f^*_{\mathrm{TR}} = \frac{\sigma_y(t) - \sigma_{y-1}(t)}{\sigma(t+\delta t)_i - \sigma(t+\delta t)_{i-1}} \tag{18}$$

The elasto-plastic stress increment will be

$$\{\delta\sigma_i\} = [D]_{\mathrm{ep}}\{\sigma(t+\delta t)\}_{i-1}(1 - f^*_{\mathrm{TR}})\{\delta\epsilon\} \tag{19}$$

If $\sigma(\mathrm{t}+\delta\mathrm{t})_i < \sigma\mathrm{y}(\mathrm{t})$, it is an elastic limit and the process is repeated. The equivalent stress is calculated from the current stress state where stresses are drifted; they are corrected from the equivalent stress-strain curve.

The values of $[\mathrm{D}]_{\mathrm{ep}}$ and $[\mathrm{D}]_{\mathrm{p}}$ are derived using plastic stress/strain increments. In the elasto-plastic stage, the time-dependent yield function is f(t). It is assumed that the strain or stress increment is normal to the plastic potential Q(σ,K). The plastic increment, for example, is given by

$$\delta\epsilon(t+\delta t)_{\mathrm{p}} = \partial Q/\partial\sigma = \lambda b \tag{20}$$

where λ = proportionality constant > 0
b $\approx \partial Q/\partial\sigma(t+\delta t)$

When $f(t) = Q$

$$\delta\epsilon(t+\delta t)_{\mathrm{p}} = \lambda a$$
$$a = \partial f/\partial\sigma(t+\delta t)$$
$$\text{therefore, } \mathrm{d}f = [\partial f/\partial\sigma(t+\delta t)]\,\mathrm{d}\sigma(t+\delta t) + (\partial f/\mathrm{d}K)\mathrm{d}K$$

If A is the hardening plastic parameter, then

$$A = \frac{1}{\lambda}(\partial f/\mathrm{d}K)\mathrm{d}K$$

An expression can easily be derived for the proportionality constant λ

$$\lambda = \frac{a^{\mathrm{T}''} D\delta\epsilon(t+\delta t)}{[A + a^{\mathrm{T}} Db]} \quad \text{hence } \delta\epsilon(t+\delta t)_{\mathrm{p}} = b\lambda \tag{21}$$

The value of the elasto-plastic matrix $[D]_{ep}$ is given by

$$[D]_{\mathrm{ep}} = D - \frac{Dba^{\mathrm{T}''} Db}{[A + a^{\mathrm{T}''} Db]} \tag{22}$$

The value of the plastic matrix [D]p is given by

$$[D]_{\mathrm{p}} = \frac{Dba^{\mathrm{T}''} D}{[A + a^{\mathrm{T}''} Db]} \tag{23}$$

where [D] is the compliance matrix for the elastic case.
The elasto-plastic stress increment is given by

$$\{\delta\sigma_i\}_t = [D]_{\mathrm{ep}}\{\sigma_i\}_t^{Y*}(1 - f_{\mathrm{TR}}^*)\{\delta\epsilon\} \tag{24}$$

for the sake of brevity, $\{\delta\sigma_{\mathrm{i}}\}\mathrm{t} = \delta\sigma(\mathrm{t} + \delta\mathrm{t})$ for the ith point or increment and other symbols are as given above. The total value becomes

$$\{\sigma_i\}_{\mathrm{TOT}} = \{\sigma_i\}_t^{Y*} + \{\delta\sigma_i\} \tag{25}$$

If $\{\sigma_{\mathrm{i}}\}\mathrm{t} < \sigma_{\mathrm{yt}}$ it is an elastic point and $\{\sigma_{\mathrm{i}}\}\mathrm{t} = \{\sigma_{\mathrm{i}}'\}\mathrm{t}$. The process is repeated. Looking at the plastic point in the previous iteration, it is necessary to check for unloading when $\sigma \geq \sigma$y, the unloading will bring about the total stress $\{\sigma_{\mathrm{i}}\}\mathrm{t} = \{\sigma_{\mathrm{i-1}}\}t + \{\delta\sigma_{\mathrm{i}}'\}\mathrm{t}$, and set $\{\sigma_{\mathrm{y}}\}_{\mathrm{t}} = \{\sigma_{\mathrm{i-1}}\}_{\mathrm{t}}$. Then loading at this point gives

$$\{\delta\sigma_i\} = [D]_{\mathrm{ep}}\{\sigma_{i-1}\}_t\{\delta\epsilon\}_t \tag{26}$$

The total stress is then written as

$$\{\sigma_i\}_{\mathrm{TOT}} = \{\sigma_{i-1}\}_t\{\delta\sigma_i\} \tag{27}$$

Stresses are calculated using the elasto-plastic material matrix, which does not drift from the yield surfaces, as shown in Figure AIC.2. Stresses are corrected from the equivalent stress-strain curve by

$$\{\sigma_{\mathrm{corr}}\} = \{\sigma_{i-1}\}_t + K\{\delta\epsilon_{\mathrm{p}}\}_t \tag{28}$$

where, $\{\delta\epsilon_{\mathrm{p}}\}_t = \sqrt{\frac{2}{3}}\{\sqrt{(\delta\epsilon_{ij}^{\mathrm{p}})}\}_i =$ equivalent plastic strain increment. K is the strain-hardened parameter, such that $\{\delta\epsilon_{\mathrm{p}}\}t = \lambda$. The equivalent stress is calculated from the current stress state, as shown below:

$$\{\sigma_i\}_{\mathrm{eq}} = f\{(\sigma_i)\}_t \tag{29}$$

the value of $\sigma_{\mathrm{corr}}/\sigma$ is a factor (31)

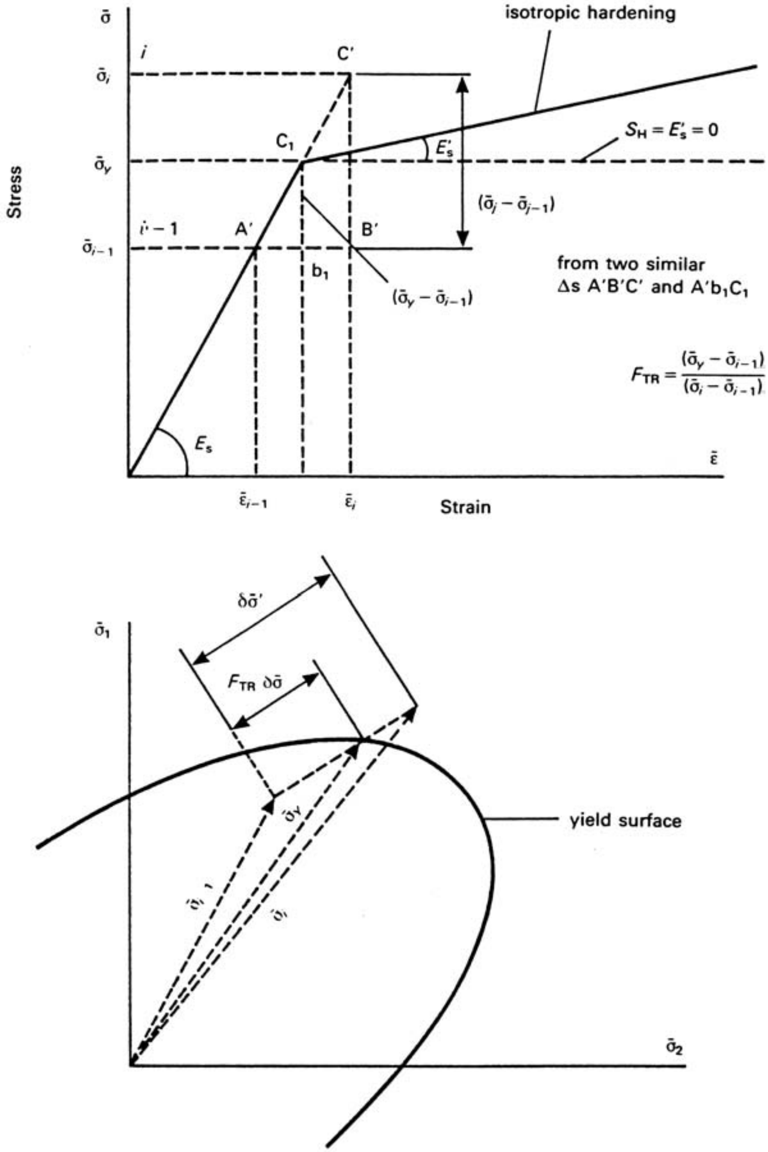

Fig. AIC.2. Transitional factor and plastic point.

Table AIC.1. Chain rule

$$
\begin{bmatrix} \frac{\partial u}{\partial X} \\ \frac{\partial u}{\partial Y} \\ \frac{\partial u}{\partial Z} \\ \frac{\partial v}{\partial X} \\ \frac{\partial v}{\partial Y} \\ \frac{\partial v}{\partial Z} \\ \frac{\partial w}{\partial X} \\ \frac{\partial w}{\partial Y} \\ \frac{\partial w}{\partial Z} \end{bmatrix} = \frac{1}{\det J} \begin{bmatrix} C_{11} & C_{12} & C_{13} & 0 & 0 & 0 & 0 & 0 & 0 \\ C_{21} & C_{22} & C_{23} & 0 & 0 & 0 & 0 & 0 & 0 \\ C_{31} & C_{32} & C_{33} & 0 & 0 & 0 & 0 & 0 & 0 \\ 0 & 0 & 0 & C_{11} & C_{12} & C_{13} & 0 & 0 & 0 \\ 0 & 0 & 0 & C_{21} & C_{22} & C_{23} & 0 & 0 & 0 \\ 0 & 0 & 0 & C_{31} & C_{32} & C_{33} & 0 & 0 & 0 \\ 0 & 0 & 0 & 0 & 0 & 0 & C_{11} & C_{12} & C_{13} \\ 0 & 0 & 0 & 0 & 0 & 0 & C_{21} & C_{22} & C_{23} \\ 0 & 0 & 0 & 0 & 0 & 0 & C_{31} & C_{32} & C_{33} \end{bmatrix} \begin{bmatrix} \frac{\partial u}{\partial \xi} \\ \frac{\partial u}{\partial \eta} \\ \frac{\partial u}{\partial \zeta} \\ \frac{\partial v}{\partial \xi} \\ \frac{\partial v}{\partial \eta} \\ \frac{\partial v}{\partial \zeta} \\ \frac{\partial w}{\partial \xi} \\ \frac{\partial w}{\partial \eta} \\ \frac{\partial w}{\partial \zeta} \end{bmatrix}
$$

where

$$C_{11} = \frac{\partial Y}{\partial \xi}\frac{\partial Z}{\partial \xi} - \frac{\partial Z}{\partial \eta}\frac{\partial Y}{\partial \xi} \qquad C_{12} = \frac{\partial Z}{\partial \xi}\frac{\partial Y}{\partial \zeta} - \frac{\partial Y}{\partial \xi}\frac{\partial Z}{\partial \zeta}$$

$$C_{13} = \frac{\partial Y}{\partial \xi}\frac{\partial Z}{\partial \zeta} - \frac{\partial Z}{\partial \xi}\frac{\partial Y}{\partial \zeta} \qquad C_{21} = \frac{\partial Z}{\partial \xi}\frac{\partial X}{\partial \zeta} - \frac{\partial X}{\partial \xi}\frac{\partial Z}{\partial \zeta}$$

$$C_{22} = \frac{\partial X}{\partial \xi}\frac{\partial Z}{\partial \zeta} - \frac{\partial Z}{\partial \xi}\frac{\partial X}{\partial \zeta} \qquad C_{23} = \frac{\partial Z}{\partial \xi}\frac{\partial X}{\partial \eta} - \frac{\partial X}{\partial \xi}\frac{\partial Z}{\partial \eta}$$

$$C_{31} = \frac{\partial X}{\partial \eta}\frac{\partial Y}{\partial \zeta} - \frac{\partial Y}{\partial \eta}\frac{\partial X}{\partial \zeta} \qquad C_{32} = \frac{\partial Y}{\partial \xi}\frac{\partial X}{\partial \zeta} - \frac{\partial X}{\partial \xi}\frac{\partial Y}{\partial \zeta}$$

$$C_{33} = \frac{\partial X}{\partial \xi}\frac{\partial Y}{\partial \eta} - \frac{\partial Y}{\partial \xi}\frac{\partial X}{\partial \eta}$$

$\det [J]$ = the determinant of the Jacobian matrix.

Table AIC.2. Solid isoparametric elements
Eight-noded solid element

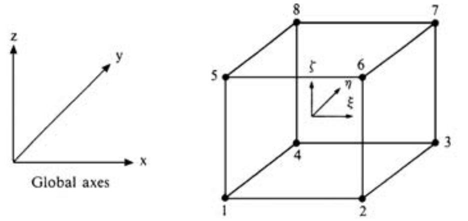

Node i	Shape functions $N_i(\xi,\eta,\zeta)$	Derivatives		
		$\frac{\partial N_i}{\partial \xi}$	$\frac{\partial N_i}{\partial \eta}$	$\frac{\partial N_i}{\partial \zeta}$
1	$\frac{1}{8}(1-\xi)(1-\eta)(1-\zeta)$	$-\frac{1}{8}(1-\eta)(1-\zeta)$	$-\frac{1}{8}(1-\xi)(1-\zeta)$	$-\frac{1}{8}(1-\eta)(1-\xi)$
2	$\frac{1}{8}(1+\xi)(1-\eta)(1-\zeta)$	$\frac{1}{8}(1-\eta)(1-\zeta)$	$-\frac{1}{8}(1+\xi)(1-\zeta)$	$-\frac{1}{8}(1+\eta)(1-\eta)$
3	$\frac{1}{8}(1+\xi)(1+\eta)(1-\zeta)$	$\frac{1}{8}(1+\eta)(1-\zeta)$	$\frac{1}{8}(1+\xi)(1-\zeta)$	$-\frac{1}{8}(1+\eta)(1+\eta)$
4	$\frac{1}{8}(1-\xi)(1+\eta)(1-\zeta)$	$-\frac{1}{8}(1+\eta)(1-\zeta)$	$\frac{1}{8}(1-\xi)(1-\zeta)$	$-\frac{1}{8}(1-\eta)(1+\eta)$
5	$\frac{1}{8}(1-\xi)(1-\eta)(1+\zeta)$	$-\frac{1}{8}(1-\eta)(1+\zeta)$	$-\frac{1}{8}(1-\xi)(1+\zeta)$	$\frac{1}{8}(1-\eta)(1-\eta)$
6	$\frac{1}{8}(1+\xi)(1-\eta)(1+\zeta)$	$\frac{1}{8}(1-\eta)(1+\zeta)$	$-\frac{1}{8}(1+\xi)(1+\zeta)$	$\frac{1}{8}(1+\eta)(1-\eta)$
7	$\frac{1}{8}(1+\xi)(1+\eta)(1+\zeta)$	$\frac{1}{8}(1+\eta)(1+\zeta)$	$\frac{1}{8}(1+\xi)(1+\zeta)$	$\frac{1}{8}(1+\eta)(1+\eta)$
8	$\frac{1}{8}(1-\xi)(1+\eta)(1+\zeta)$	$-\frac{1}{8}(1+\eta)(1+\zeta)$	$\frac{1}{8}(1-\xi)(1+\zeta)$	$\frac{1}{8}(1-\eta)(1+\eta)$

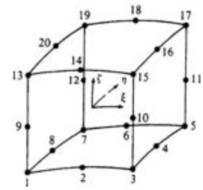

Table AIC.3. Twenty-noded solid element

Node i	Shape functions $N_i(\xi,\eta,\zeta)$	Derivatives		
		$\frac{\partial N_i}{\partial \xi}$	$\frac{\partial N_i}{\partial \eta}$	$\frac{\partial N_i}{\partial \zeta}$
1	$\frac{1}{8}(1-\xi)(1-\eta)(1-\zeta)(-\xi-\eta-\zeta-2)$	$\frac{1}{8}(1-\eta)(1-\zeta)(2\xi+\eta+\zeta+1)$	$\frac{1}{8}(1-\xi)(1-\zeta)(2\eta+\xi+\zeta+1)$	$\frac{1}{8}(1-\xi)(1-\eta)(2\zeta+\eta+\xi+1)$
2	$\frac{1}{4}(1-\xi^2)(1-\eta)(1-\zeta)$	$-\frac{1}{2}(1-\eta)(1-\zeta)\xi$	$-\frac{1}{4}(1-\xi^2)(1-\zeta)$	$-\frac{1}{4}(1-\xi^2)(1-\eta)$
3	$\frac{1}{8}(1+\xi)(1-\eta)(1-\zeta)(\xi-\eta-\zeta-2)$	$\frac{1}{8}(1-\eta)(1-\zeta)(2\xi-\eta-\zeta-1)$	$\frac{1}{8}(1+\xi)(1-\zeta)(2\eta-\xi+\zeta+1)$	$\frac{1}{8}(1+\xi)(1-\eta)(2\zeta-\xi+\eta+1)$
4	$\frac{1}{4}(1+\xi)(1-\eta^2)(1-\zeta)$	$\frac{1}{4}(1-\eta^2)(1-\zeta)$	$-\frac{1}{2}(1+\xi)(1-\zeta)\eta$	$-\frac{1}{4}(1-\eta^2)(1+\xi)$
5	$\frac{1}{8}(1+\xi)(1+\eta)(1-\zeta)(\xi+\eta-\zeta-2)$	$\frac{1}{8}(1+\eta)(1-\zeta)(2\xi+\eta-\zeta-1)$	$\frac{1}{8}(1+\xi)(1-\zeta)(2\eta+\xi-\zeta-1)$	$\frac{1}{8}(1+\xi)(1+\eta)(2\zeta-\xi-\eta+1)$
6	$\frac{1}{4}(1-\xi^2)(1+\eta)(1-\zeta)$	$-\frac{1}{2}(1+\eta)(1-\zeta)\xi$	$\frac{1}{4}(1-\xi^2)(1-\zeta^2)$	$-\frac{1}{4}(1-\xi^2)(1+\eta)$
7	$\frac{1}{8}(1-\xi)(1+\eta)(1-\zeta)(-\xi+\eta-\zeta-2)$	$\frac{1}{8}(1+\eta)(1-\zeta)(2\xi-\eta+\zeta+1)$	$\frac{1}{8}(1-\xi)(1-\zeta)(2\eta-\xi-\zeta-1)$	$\frac{1}{8}(1-\xi)(1+\eta)(2\zeta-\eta+\xi+1)$
8	$\frac{1}{4}(1-\xi)(1-\eta^2)(1-\zeta)$	$-\frac{1}{4}(1-\eta^2)(1-\zeta)$	$-\frac{1}{2}(1-\xi)(1-\zeta)$	$-\frac{1}{4}(1-\eta^2)(1-\xi)$
9	$\frac{1}{4}(1-\xi)(1-\eta)(1-\zeta^2)$	$-\frac{1}{4}(1-\zeta^2)(1-\eta)$	$-\frac{1}{4}(1-\xi)(1-\zeta^2)$	$-\frac{1}{2}(1-\xi)(1-\eta)\zeta$
10	$\frac{1}{4}(1+\xi)(1-\eta)(1-\zeta^2)$	$\frac{1}{4}(1-\eta)(1-\zeta^2)$	$-\frac{1}{4}(1+\xi)(1-\zeta^2)$	$-\frac{1}{2}(1+\xi)(1-\eta)\zeta$
11	$\frac{1}{4}(1+\xi)(1+\eta)(1-\zeta^2)$	$\frac{1}{4}(1+\eta)(1-\zeta^2)$	$\frac{1}{4}(1+\xi)(1-\zeta^2)$	$-\frac{1}{2}(1+\xi)(1+\eta)\zeta$
12	$\frac{1}{4}(1-\xi)(1+\eta)(1-\zeta^2)$	$-\frac{1}{4}(1+\eta)(1-\zeta^2)$	$\frac{1}{4}(1-\xi)(1-\zeta^2)$	$-\frac{1}{2}(1-\xi)(1+\eta)\zeta$
13	$\frac{1}{8}(1-\xi)(1-\eta)(1+\zeta)(-\xi-\eta+\zeta-2)$	$\frac{1}{8}(1-\eta)(1+\zeta)(2\xi+\eta-\zeta+1)$	$\frac{1}{8}(1-\xi)(1+\zeta)(2\eta+\xi-\zeta+1)$	$\frac{1}{8}(1-\xi)(1-\eta)(2\zeta-\eta-\xi-1)$
14	$\frac{1}{4}(1-\xi^2)(1-\eta)(1+\zeta)$	$-\frac{1}{2}(1-\eta)(1+\zeta)\xi$	$-\frac{1}{4}(1-\xi^2)(1+\zeta)$	$\frac{1}{4}(1-\xi^2)(1-\eta)$
15	$\frac{1}{8}(1+\xi)(1-\eta)(1+\zeta)(\xi-\eta+\zeta-2)$	$\frac{1}{8}(1-\eta)(1+\zeta)(2\xi-\eta+\zeta-1)$	$\frac{1}{8}(1+\zeta)(1+\xi)(2\eta-\xi-\zeta+1)$	$\frac{1}{8}(1-\eta)(1+\xi)(2\zeta+\xi-\eta-1)$
16	$\frac{1}{4}(1+\xi)(1-\eta^2)(1+\zeta)$	$\frac{1}{4}(1-\eta^2)(1+\xi)$	$-\frac{1}{2}(1+\xi)(1+\zeta)\eta$	$\frac{1}{4}(1+\xi)(1-\eta^2)$
17	$\frac{1}{8}(1+\xi)(1+\eta)(1+\zeta)(\xi+\eta+\zeta-2)$	$\frac{1}{8}(1+\eta)(1+\zeta)(2\xi+\eta+\zeta-1)$	$\frac{1}{8}(1+\xi)(1+\zeta)(2\eta+\xi+\zeta-1)$	$\frac{1}{8}(1+\xi)(1+\eta)(2\zeta+\eta+\xi-1)$
18	$\frac{1}{4}(1-\xi^2)(1+\eta)(1+\zeta)$	$-\frac{1}{2}\xi(1+\eta)(1+\zeta)$	$\frac{1}{4}(1-\xi^2)(1+\zeta)$	$\frac{1}{4}(1-\xi^2)(1+\eta)$
19	$\frac{1}{8}(1-\xi)(1+\eta)(1+\zeta)(-\xi+\eta+\zeta-2)$	$\frac{1}{8}(1+\eta)(1+\zeta)(2\xi-\eta-\zeta-1)$	$\frac{1}{8}(1-\xi)(1+\zeta)(2\eta-\xi+\zeta-1)$	$\frac{1}{8}(1-\xi)(1+\eta)(2\zeta-\xi+\eta-1)$
20	$\frac{1}{4}(1-\xi)(1-\eta^2)(1+\zeta)$	$-\frac{1}{4}(1-\eta^2)(1+\zeta)$	$-\frac{1}{2}(1-\xi)(1+\zeta)\eta$	$\frac{1}{4}(1-\xi)(1-\eta^2)$

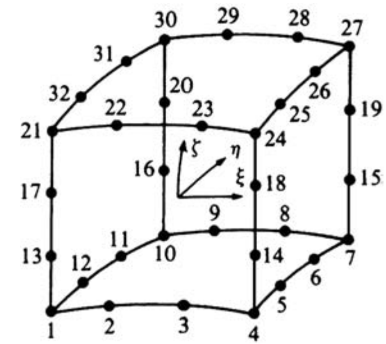

Table AIC.4. Thirty-two-noded solid element

Node i	Shape functions $N_i(\xi,\eta,\zeta)$	Derivatives		
		$\frac{\partial N_i}{\partial \xi}$	$\frac{\partial N_i}{\partial \eta}$	$\frac{\partial N_i}{\partial \zeta}$
23	$\frac{9}{64}(1-\xi^2)(1+3\xi)(1-\eta)(1+\zeta)$	$\frac{9}{64}(3-2\xi-9\xi^2)(1-\eta)(1+\zeta)$	$-\frac{9}{64}(1-\xi^2)(1+3\xi)(1+\zeta)$	$\frac{9}{64}(1-\xi^2)(1+3\xi)(1-\eta)$
24	$\frac{9}{64}(1+\xi)(1-\eta)(1+\zeta)[\xi^2+\eta^2-\frac{19}{9}+\zeta^2]$	$\frac{9}{64}(1+\zeta)(1-\eta)(2\xi+3\xi^2+\zeta^2+\eta^2-\frac{19}{9})$	$\frac{9}{64}(1+\xi)(1+\zeta)(2\eta^2-3\eta-\xi^2-\zeta^2+\frac{19}{9})$	$\frac{9}{64}(1+\xi)(1-\eta)(2\zeta+3\zeta^2+\xi^2+\eta^2-\frac{19}{9})$
25	$\frac{9}{64}(1-\eta^2)(1-3\eta)(1+\xi)(1+\zeta)$	$\frac{9}{64}(1-\eta^2)(1-3\eta)(1+\zeta)$	$\frac{9}{64}(9\eta^2-2\eta-3)(1+\xi)(1+\zeta)$	$\frac{9}{64}(1-\eta^2)(1-3\eta)(1+\xi)$
26	$\frac{9}{64}(1-\eta^2)(1+3\eta)(1+\xi)(1+\zeta)$	$\frac{9}{64}(1-\eta^2)(1+3\eta)(1+\zeta)$	$\frac{9}{64}(3-2\eta-9\eta^2)(1+\xi)(1+\zeta)$	$\frac{9}{64}(1-\eta^2)(1+3\eta)(1+\xi)$
27	$\frac{9}{64}(1+\xi)(1+\eta)(1+\zeta)(\xi^2+\eta^2+\zeta^2-\frac{19}{9})$	$\frac{9}{64}(1+\xi)(1+\zeta)(2\xi+3\xi^2+\eta^2+\zeta^2-\frac{19}{9})$	$\frac{9}{64}(1+\xi)(1+\zeta)(2\eta+3\eta^2+\xi^2+\zeta^2-\frac{19}{9})$	$\frac{9}{64}(1+\xi)(1+\eta)(2\zeta^2+3\zeta+\xi^2+\eta^2-\frac{19}{9})$
28	$\frac{9}{64}(1-\xi^2)(1+3\xi)(1+\eta)(1+\zeta)$	$\frac{9}{64}(1+\eta)(1+\zeta)(3-2\xi-9\xi^2)$	$\frac{9}{64}(1-\xi^2)(1+3\xi)(1+\zeta)$	$\frac{p}{64}(1-\xi^2)(1+3\xi)(1+\eta)$
29	$\frac{9}{64}(1-\xi^2)(1-3\xi)(1+\eta)(1+\zeta)$	$\frac{9}{64}(1+\eta)(1+\zeta)(9\xi^2-2\xi-3)$	$\frac{9}{64}(1-\xi^2)(1-3\xi)(1+\zeta)$	$\frac{9}{64}(1-\xi^2)(1-3\xi)(1+\eta)$
30	$\frac{9}{64}(1-\xi)(1+\eta)(1+\zeta)(\zeta^2+\eta^2+\xi^2-\frac{19}{9})$	$\frac{9}{64}(1+\eta)(1+\eta)(2\xi-3\xi^2-\eta^2-\zeta^2+\frac{19}{9})$	$\frac{9}{64}(1-\xi)(1+\zeta)(2\eta+3\eta^2+\zeta^2+\xi^2-\frac{19}{9})$	$\frac{9}{64}(1-\xi)(1+\eta)(2\zeta+3\zeta^2+\xi^2+\eta^2-\frac{19}{9})$
31	$\frac{9}{64}(1-\eta^2)(1+3\eta)(1-\xi)(1+\zeta)$	$-\frac{9}{64}(1-\eta^2)(1+3\eta)(1+\zeta)$	$\frac{9}{64}(3-2\eta-9\eta^2)(1-\xi)(1+\zeta)$	$\frac{9}{64}(1-\eta^2)(1+3\eta)(1-\xi)$
32	$\frac{9}{64}(1-\eta^2)(1-3\eta)(1-\xi)(1+\zeta)$	$-\frac{9}{64}(1-\eta^2)(1-3\eta)(1+\zeta)$	$\frac{9}{64}(9\eta^2-2\eta-3)(1-\xi)(1+\zeta)$	$\frac{9}{64}(1-\eta^2)(1-3\eta)(1-\xi)$

Table AIC.5. Isoparametric membrane elements

Four-noded membrane element

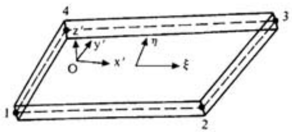

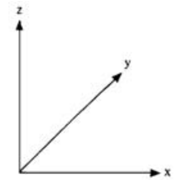

Global cartesian system

Node i	Shape functions $N_i(\xi,\eta)$	Derivatives	
		$\frac{\partial N_i}{\partial \xi}$	$\frac{\partial N_i}{\partial \eta}$
1	$\frac{1}{4}(1-\xi)(1-\eta)$	$-\frac{1}{4}(1-\eta)$	$-\frac{1}{4}(1-\xi)$
2	$\frac{1}{4}(1+\xi)(1-\eta)$	$\frac{1}{4}(1-\eta)$	$-\frac{1}{4}(1+\xi)$
3	$\frac{1}{4}(1+\xi)(1+\eta)$	$\frac{1}{4}(1+\eta)$	$\frac{1}{4}(1+\xi)$
4	$\frac{1}{4}(1-\xi)(1+\eta)$	$-\frac{1}{4}(1+\eta)$	$\frac{1}{4}(1-\xi)$

Eight-noded membrane element

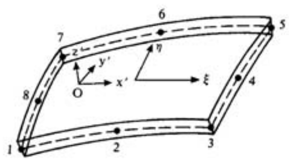

Node i	Shape functions $N_i(\xi,\eta)$	Derivatives	
		$\frac{\partial N_i}{\partial \xi}$	$\frac{\partial N_i}{\partial \eta}$
1	$\frac{1}{4}(1-\xi)(1-\eta)(-\xi-\eta-1)$	$\frac{1}{4}(1-\eta)(2\xi+\eta)$	$\frac{1}{4}(1-\xi)(2\eta+\xi)$
2	$\frac{1}{2}(1-\xi^2)(1-\eta)$	$-\xi(1-\eta)$	$-\frac{1}{2}(1-\xi^2)$
3	$\frac{1}{4}(1+\xi)(1-\eta)(\xi-\eta-1)$	$\frac{1}{4}(1-\eta)(2\xi-\eta)$	$\frac{1}{4}(1+\xi)(2\eta-\xi)$
4	$\frac{1}{2}(1-\eta^2)(1+\xi)$	$\frac{1}{2}(1-\eta^2)$	$-\eta(1+\xi)$
5	$\frac{1}{4}(1+\xi)(1+\eta)(\xi+\eta-1)$	$\frac{1}{4}(1+\eta)(2\xi+\eta)$	$\frac{1}{4}(1+\xi)(2\eta+\xi)$
6	$\frac{1}{2}(1-\xi^2)(1+\eta^2)$	$-\xi(1+\eta)$	$\frac{1}{2}(1-\xi^2)$
7	$\frac{1}{4}(1-\xi)(1+\eta)(-\xi+\eta-1)$	$\frac{1}{4}(1+\eta)(2\xi-\eta)$	$\frac{1}{4}(1-\xi)(2\eta-\xi)$
8	$\frac{1}{2}(1-\eta^2)(1-\xi)$	$-\frac{1}{2}(1-\eta^2)$	$-\eta(1-\xi)$

Table AIC.6. Twelve-noded membrane element

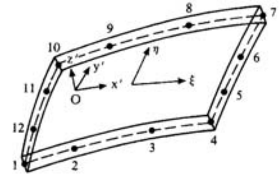

Node i	Shape functions $N_i(\xi,\eta)$	Derivatives	
		$\frac{\partial N_i}{\partial \xi}$	$\frac{\partial N_i}{\partial \eta}$
1	$\frac{9}{32}(1-\xi)(1-\eta)[(\xi^2+\eta^2-\frac{10}{9}]$	$\frac{9}{32}(1-\eta)[2\xi-3\xi^2-\eta^2+\frac{10}{9}]$	$\frac{9}{32}(1-\xi)[2\eta-3\eta^2-\xi^2+\frac{10}{9}]$
2	$\frac{9}{32}(1-\xi)(1-\xi^2)(1-\eta)$	$\frac{9}{32}(1-\eta)(3\xi^2-2\xi-1)$	$-\frac{9}{32}(1-\xi)(1-\xi^2)$
3	$\frac{9}{32}(1-\eta)(1-\xi^2)(1+\xi)$	$\frac{9}{32}(1-\eta)(1-2\xi-3\xi^2)$	$-\frac{9}{32}(1-\xi^2)(1+\xi)$
4	$\frac{9}{32}(1+\xi)(1-\eta)[\xi^2+\eta^2-\frac{10}{9}]$	$\frac{9}{32}(1-\eta)[2\xi+3\xi^2+\eta^2-\frac{10}{9}]$	$\frac{9}{32}(1+\xi)[2\eta-3\eta^2-\xi^2-\frac{10}{9}]$
5	$\frac{9}{32}(1+\xi)(1-\eta^2)(1-\eta)$	$\frac{9}{32}(1-\eta^2)(1-\eta)$	$\frac{9}{32}(1+\xi)(3\eta^2-2\eta-1)$
6	$\frac{9}{32}(1+\xi)(1-\eta^2)(1+\eta)$	$\frac{9}{32}(1-\eta^2)(1+\eta)$	$\frac{9}{32}(1+\xi)(1-2\eta-3\eta^2)$
7	$\frac{9}{32}(1+\xi)(1+\eta)[\xi^2+\eta^2-\frac{10}{9}]$	$\frac{9}{32}(1+\eta)[2\xi+3\xi^2+\eta^2-\frac{10}{9}]$	$\frac{9}{32}(1+\xi)[2\eta+3\eta^2+\xi^2-\frac{10}{9}]$
8	$\frac{9}{32}(1+\eta)(1-\xi^2)(1+\xi)$	$\frac{9}{32}(1+\eta)(1-2\xi-3\xi^2)$	$\frac{9}{32}(1-\xi^2)(1+\xi)$
9	$\frac{9}{32}(1+\eta)(1-\xi^2)(1-\xi)$	$\frac{9}{32}(1+\eta)(3\xi^2-3\xi-1)$	$\frac{9}{32}(1-\xi^2)(1-\xi)$
10	$\frac{9}{32}(1-\xi)(1+\eta)[\xi^2+\eta^2-\frac{10}{9}]$	$\frac{9}{32}(1+\eta)[2\xi-3\xi^2-\eta^2+\frac{10}{9}]$	$\frac{9}{32}(1-\xi)[2\eta+3\eta^2+\xi^2-\frac{10}{9}]$
11	$\frac{9}{32}(1-\xi)(1-\eta^2)(1+\eta)$	$-\frac{9}{32}(1+\eta)(1-\eta^2)$	$\frac{9}{32}(1-\xi)(1-2\eta-3\eta^2)$
12	$\frac{9}{32}(1-\xi)(1-\eta^2)(1-\eta)$	$-\frac{9}{32}(1-\eta)(1-\eta^2)$	$\frac{9}{32}(1-\xi)(3\eta^2-2\eta-1)$

Table AIC.7. Three-dimensional reinforced concrete solid element

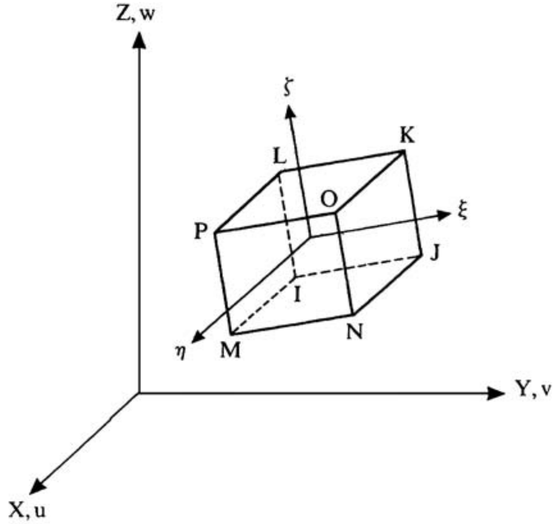

<table>
<tr><th></th><th>Shape functions</th></tr>
<tr><td>Stiffness matrix [K]</td><td>$$\begin{aligned} u = \tfrac{1}{8}[&u_{\mathrm{I}}(1-\xi)(1-\zeta)(1-\eta)\\ &+u_{\mathrm{J}}(1+\xi)(1-\zeta)(1-\eta)\\ &+u_{\mathrm{K}}(1+\xi)(1+\zeta)(1-\eta)\\ &+u_{\mathrm{L}}(1-\xi)(1+\zeta)(1-\eta)\\ &+u_{\mathrm{M}}(1-\xi)(1-\zeta)(1+\eta)\\ &+u_{\mathrm{N}}(1+\xi)(1-\zeta)(1+\eta)\\ &+u_{\mathrm{O}}(1+\xi)(1+\zeta)(1+\eta)\\ &+u_{\mathrm{P}}(1-\xi)(1+\zeta)(1+\eta)]\\ &+u_1(1-\xi^2)\\ &+u_2(1-\zeta^2)\\ &+u_3(1-\eta^2)\end{aligned}$$ $$v = \tfrac{1}{8}(v_{\mathrm{I}}(1-\xi)\ldots$$ (similar to u) $$w = \tfrac{1}{8}(w_{\mathrm{I}}(1-\xi)\ldots$$ (similar to u)</td></tr>
</table>

Table AIC.8. Crack tip solid element

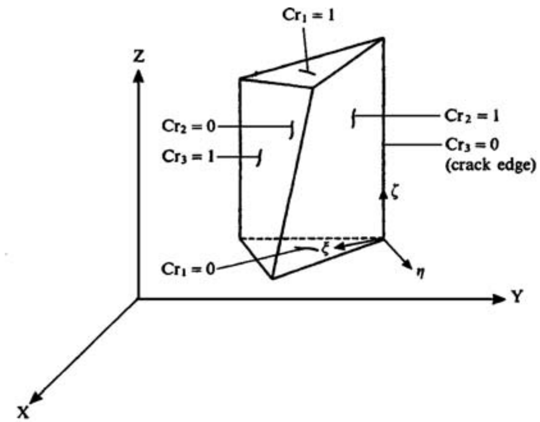

	Shape functions
Stiffness matrix $[K]$	6-node option $\xi = \alpha_1 + \alpha_2\sqrt{Cr_3} + \alpha_3 Cr_2\sqrt{Cr_3}$ $+\alpha_4 Cr_1 + \alpha_5 Cr_1\sqrt{Cr_3} + \alpha_6 Cr_2 Cr_1\sqrt{Cr_3}$ $\eta = \alpha_7 + \alpha_8\sqrt{Cr_3} + \alpha_9 Cr_2\sqrt{Cr_3}$ $+\alpha_{10} Cr_1 + \alpha_{11} Cr_1\sqrt{Cr_3} + \alpha_{12} Cr_2 Cr_1\sqrt{Cr_3}$ $\zeta = \alpha_{13} + \alpha_{14} Cr_3 + \alpha_{15} Cr_2 Cr_3$ $+\alpha_{16} Cr_1 + \alpha_{17} Cr_1 Cr_3 + \alpha_{18} Cr_2 Cr_1 Cr_3$

Table AIC.9. Shape function for a prism element

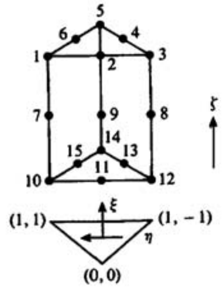

Fifteen nodes

$$N_1(\xi,\eta,\zeta) = -\tfrac{1}{2}(1+\zeta)(1-\xi^{1/2})(\sqrt{2}\xi^{1/2}-\zeta)$$
$$N_2(\xi,\eta,\zeta) = +\tfrac{1}{2}(1+\sqrt{2})(1+\zeta)(1-\xi^{1/2})(\xi^{1/2}+\eta\xi^{-1/2})$$
$$N_3(\xi,\eta,\zeta) = +\tfrac{1}{4}(1+\zeta)(\xi^{1/2}+\eta\xi^{-1/2})[(2+\sqrt{2})(\xi^{1/2}-1)-(\xi-\eta-\zeta)]$$
$$N_4(\xi,\eta,\zeta) = +\tfrac{1}{2}(1+\zeta)(\xi^{3/2}-\eta^2\xi^{-1/2})$$
$$N_5(\xi,\eta,\zeta) = +\tfrac{1}{4}(1+\zeta)(\xi^{1/2}-\eta\xi^{-1/2})[(2+\sqrt{2})(\xi^{1/2}-1)-(\xi+\eta-\zeta)]$$
$$N_6(\xi,\eta,\zeta) = +\tfrac{1}{2}(1+\sqrt{2})(1+\xi)(\xi^{1/2}-\eta\xi^{-1/2})(1-\xi^{1/2})$$
$$N_7(\xi,\eta,\zeta) = (1-\zeta^2)(1-\xi^{1/2})$$
$$N_8(\xi,\eta,\zeta) = +\tfrac{1}{2}(1-\zeta^2)(\xi^{1/2}+\eta\xi^{-1/2})$$
$$N_9(\xi,\eta,\zeta) = +\tfrac{1}{2}(1-\zeta^2)(\xi^{1/2}-\eta\xi^{-1/2})$$
$$N_{10}(\xi,\eta,\zeta) = -\tfrac{1}{2}(1-\zeta)(1-\xi^{1/2})(\sqrt{2}\xi^{1/2}+\zeta)$$
$$N_{11}(\xi,\eta,\zeta) = +\tfrac{1}{2}(1+\sqrt{2})(1-\zeta)(\xi^{1/2}+\eta\xi^{-1/2})(1-\xi^{1/2})$$
$$N_{12}(\xi,\eta,\zeta) = +\tfrac{1}{4}(1-\zeta)(\xi^{1/2}+\eta\xi^{-1/2})[(2+\sqrt{2})(\xi^{1/2}-1)-(\xi-\eta+\zeta)]$$
$$N_{13}(\xi,\eta,\zeta) = +\tfrac{1}{2}(1-\zeta)(\xi^{3/2}-\eta^2\xi^{-1/2})$$
$$N_{14}(\xi,\eta,\zeta) = +\tfrac{1}{4}(1-\zeta)(\xi^{1/2}-\eta\xi^{-1/2})[(2+\sqrt{2})(\zeta^{1/2}-1)-(\xi+\eta+\zeta)]$$
$$N_{15}(\xi,\eta,\zeta) = +\tfrac{1}{2}(1+\sqrt{2})(1-\zeta)(1-\xi^{1/2})(\xi^{1/2}-\eta\xi^{-1/2})$$

Table AIC.10. Boom elements

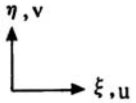

Two nodes

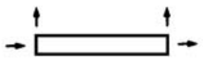

Displacement functions

$u = a_1 + b_1\xi$

$v = a_2 + b_2\xi$

Degrees of freedom = 4

Three nodes

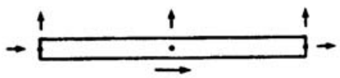

Displacement functions

$u = a_1 + b_1\xi + c_1\xi^2$

$v = a_2 + b_2\xi + c_2\xi^2$

Degrees of freedom = 6

Two nodes

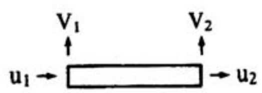

Displacement functions

$u = u_1 L_1(\xi) + u_2 L_2(\xi)$

$v = v_1 L_1(\xi) + v_2 L_2(\xi)$

Degrees of freedom = 4

Beam elements

Two nodes

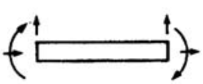

Displacement functions

$u = a_1 + b_1\xi$

$v = a_2 + b_2\xi + c_2\xi^2 + d_2\xi^3$

Degrees of freedom = 6

Three nodes
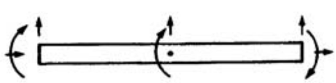
Displacement functions

$u = a_1 + b_1\xi + c_1\xi^2$

$v = a_2 + b_2\xi + c_2\xi^2 + d_2\xi^3 + e_2\xi^4 + f_2\xi^5$

Degrees of freedom = 9

Two nodes

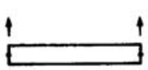

Displacement functions

$u = a_1 + b_1\xi + c_1\xi^2 + d_1\xi^3$

$v = a_2 + b_2\xi + c_2\xi^2 + d_2\xi^3 + e_2\xi^4 + f_2\xi^5$

Degrees of freedom = 10

Table AIC.11. Linear and quadratic two-dimensional disparametric elements

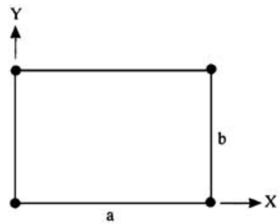

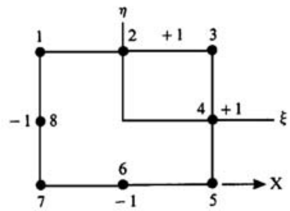

Linear shape functions:

$N_1 = \frac{1}{4}(1-\xi)(1+\eta)$ mid-side nodes 2, 6 $(\xi_r = 0)$

$N_2 = \frac{1}{4}(1+\xi)(1+\eta)$ $N_r = \frac{1}{2}(1-\xi^2)(1+\eta_0)$ Quadratic

$N_3 = \frac{1}{4}(1+\xi)(1-\eta)$ mid-side nodes 4, 8 $(\eta_r = 0)$

$N_4 = \frac{1}{4}(1-\xi)(1-\eta)$

Quadratic general shape function for the corner nodes:

$N_r = \frac{1}{4}(1+\xi_0)(1+\eta_0)(\xi_0+\eta_0+1) \quad (\xi_0 = \xi\xi_r, \eta_0 = \eta\eta_r)$

$$[B] = \sum_{r=1}^{4}[B]_r = \sum_{r=1}^{4}\begin{bmatrix} \dfrac{\partial N_r}{\partial y} & 0 \\ 0 & \dfrac{\partial N_r}{\partial y} \\ \dfrac{\partial N_r}{\partial y} & \dfrac{\partial N_r}{\partial x} \end{bmatrix} \qquad [J] = \begin{bmatrix} \dfrac{\partial X}{\partial \xi} & \dfrac{\partial Y}{\partial \xi} \\ \dfrac{\partial X}{\partial \eta} & \dfrac{\partial Y}{\partial \eta} \end{bmatrix} = \begin{bmatrix} \dfrac{a}{2} & 0 \\ 0 & \dfrac{b}{2} \end{bmatrix}$$

$$[B] = \begin{bmatrix} \dfrac{-(1+\eta)}{2a} & 0 & \dfrac{(1+\eta)}{2a} & 0 & \dfrac{(1-\eta)}{2a} & 0 & \dfrac{-(1-\eta)}{2a} & 0 \\ 0 & \dfrac{1-\xi}{2b} & 0 & \dfrac{(1+\xi)}{2b} & 0 & \dfrac{-(1+\xi)}{2b} & 0 & \dfrac{-(1-\xi)}{2b} \\ \dfrac{1-\xi}{2b} & \dfrac{-(1+\eta)}{2a} & \dfrac{1+\xi}{2b} & \dfrac{1+\eta}{2a} & \dfrac{-(1+\xi)}{2b} & \dfrac{(1+\eta)}{2a} & \dfrac{-(1-\xi)}{2b} & \dfrac{-(1-\eta)}{2a} \end{bmatrix}$$

$$[K] = \int B^{T''} DB \, \mathrm{d\,vol} = t \iint [B]^{T''}[D][B]|J| \, \mathrm{d}\xi \, \mathrm{d}\eta$$

Table AIC.12. Linear strain triangular element (six-noded)

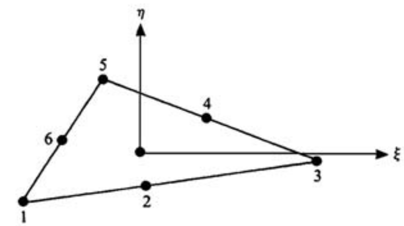

$$[B] = \begin{bmatrix} 0 & 1 & 0 & 2\xi & \eta & 0 & 0 & 0 & 0 & 0 & 0 & 0 \\ 0 & 0 & 0 & 0 & 0 & 0 & 0 & 0 & 1 & 0 & \xi & 2\eta \\ 0 & 0 & 1 & 0 & \xi & 2\eta & 0 & 1 & 0 & 2\xi & \eta & 0 \end{bmatrix}$$

$$[K] = [B]^{T''}[D][B]\,\mathrm{d}A = \frac{\text{Area} \times E}{1-\nu^2}$$

$$= \begin{bmatrix} 0 & 0 & 0 & 0 & 0 & 0 & 0 & 0 & 0 & 0 & 0 \\ 0 & 1 & 0 & 0 & 0 & 0 & 0 & \nu & 0 & 0 & 0 \\ 0 & 0 & d' & 0 & 0 & 0 & d' & 0 & 0 & 0 & 0 \\ 0 & 0 & 0 & 4\overline{\xi\xi} & 2\overline{\xi\eta} & 0 & 0 & 0 & 0 & 2\nu\overline{\xi\xi} & 4\nu\overline{\xi\eta} \\ 0 & 0 & 0 & 2\overline{\xi\eta} & d'\overline{\xi\xi}+\overline{\eta\eta} & 0 & 0 & 0 & G_1' & (\nu+d')\overline{\xi\eta} & 2\nu\overline{\eta\eta} \\ 0 & 0 & 0 & 0 & 2d'\overline{\xi\eta} & G' & 0 & 0 & G_2'' & 2d'\overline{\eta\eta} & 0 \\ 0 & 0 & 0 & 0 & 0 & G'' & 0 & 0 & 0 & 0 & 0 \\ 0 & 0 & d' & 0 & 0 & 0 & 0 & 0 & 0 & 0 & 0 \\ 0 & \nu & 0 & 0 & 0 & 0 & 0 & 1 & 0 & 0 & 0 \\ 0 & 0 & 0 & 0 & 2d'\overline{\xi\xi} & G_2'' & 0 & 0 & G_1'' & 2d'\overline{\xi\eta} & 0 \\ 0 & 0 & 0 & 2d'\overline{\xi\xi} & (\nu+d')\overline{\xi\eta} & G_1' & 0 & 0 & G' & \overline{\xi\xi}+d'\overline{\eta\eta} & 2\overline{\xi\eta} \\ 0 & 0 & 0 & 4d'\overline{\xi\eta} & 2\nu\overline{\eta\eta} & 0 & 0 & 0 & 0 & 2\overline{\xi\eta} & 4\overline{\eta\eta} \end{bmatrix}$$

$d' = (1-\nu)/2 \quad \overline{\xi\xi} = \frac{1}{12}(\xi_1^2+\xi_3^2+\xi_5^2) \quad \overline{\xi\eta} = \frac{1}{12}(\xi_1\eta_1+\xi_3\eta_3+\xi_5\eta_5)$

$\overline{\eta\eta} = \frac{1}{12}(\eta_1^2+\eta_3^2+\eta_5^2) \quad G' = 2d'\overline{\xi\eta} \quad G'' = 4d'\eta\eta$

$G_1' = 2d'\overline{\xi\xi} \quad G_2' = 4d'\overline{\xi\xi} \quad G_1'' = 4d'\overline{\xi\xi} \quad G_2'' = 4d'\overline{\xi\eta}$

Table AIC.13. Constant stress/strain [K] matrix

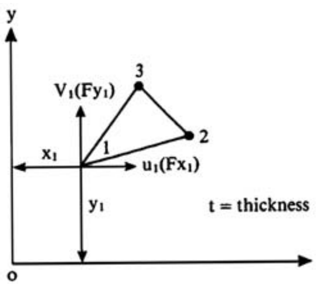

Triangular

Plane stress:

$$\bar{d}_{11} = \bar{d}_{22} = E/(1-\nu^2)$$
$$\bar{d}_{12} = \bar{d}_{21} = \nu E/(1-\nu^2)$$
$$\bar{d}_{33} = E/2(1+\nu)$$

Plane strain:

$$\bar{d}_{11} = \bar{d}_{22} = E(1-\nu)/(1+\nu)(1-2\nu)$$
$$\bar{d}_{12} = \bar{d}_{21} = \nu E/(1+\nu)(1-2\nu)$$
$$\bar{d}_{33} = E/2(1+\nu)$$

$$[K] = \frac{t}{4\Delta}\begin{bmatrix}
\bar{d}_{11}(y_2-y_3)^2 + \bar{d}_{33}(x_3-x_2)^2 & \bar{d}_{12}(x_3-x_2)(y_2-y_3) + \bar{d}_{33}(x_3-x_2)(y_2-y_3) & \bar{d}_{11}(y_2-y_3)(y_3-y_1) + \bar{d}_{33}(x_3-x_2)(x_1-x_3) & \bar{d}_{12}(x_1-x_3)(y_2-y_3) + \bar{d}_{33}(x_3-x_2)(y_3-y_1) & \bar{d}_{11}(y_1-y_2)(y_2-y_3) + \bar{d}_{33}(x_2-x_1)(x_3-x_2) & \bar{d}_{12}(x_2-x_1)(y_2-y_3) + \bar{d}_{33}(x_3-x_2)(y_1-y_2) \\
\bar{d}_{21}(x_3-x_2)(y_2-y_3) + \bar{d}_{33}(x_3-x_2)(y_2-y_3) & \bar{d}_{22}(x_3-x_2)^2 + \bar{d}_{33}(y_2-y_3)^2 & \bar{d}_{12}(y_3-y_1)(x_3-x_2) + \bar{d}_{33}(x_1-x_3)(y_2-y_3) & \bar{d}_{22}(x_3-x_2)(x_1-x_3) + \bar{d}_{33}(y_2-y_3)(y_3-y_1) & \bar{d}_{21}(x_3-x_2)(y_1-y_2) + \bar{d}_{33}(x_2-x_1)(y_2-y_2) & \bar{d}_{22}(x_2-x_1)(x_3-x_2) + \bar{d}_{33}(y_1-y_2)(y_2-y_3) \\
\bar{d}_{11}(y_2-y_3)(y_3-y_1) + \bar{d}_{33}(x_1-x_3)(x_3-x_2) & \bar{d}_{12}(x_3-x_2)(y_3-y_1) + \bar{d}_{33}(x_1-x_3)(y_2-y_3) & \bar{d}_{11}(y_3-y_1)^2 + \bar{d}_{33}(x_1-x_3)^2 & \bar{d}_{12}(x_1-x_3)(y_3-y_1) + \bar{d}_{33}(x_1-x_3)(y_3-y_1) & \bar{d}_{11}(y_1-y_2)(y_3-y_1) + \bar{d}_{33}(x_1-x_3)(x_2-x_1) & \bar{d}_{12}(x_2-x_1)(y_3-y_1) + \bar{d}_{33}(x_1-x_3)(y_1-y_2) \\
\bar{d}_{21}(x_1-x_3)(y_2-y_3) + \bar{d}_{33}(x_3-x_2)(y_3-y_1) & \bar{d}_{22}(x_1-x_3)(x_3-x_2) + \bar{d}_{33}(y_2-y_3)(y_3-y_1) & \bar{d}_{12}(x_1-x_3)(y_3-y_1) + \bar{d}_{33}(x_1-x_3)(y_3-y_1) & \bar{d}_{22}(x_1-x_3)^2 + \bar{d}_{33}(y_3-y_1)^2 & \bar{d}_{21}(x_1-x_3)(y_1-y_2) + \bar{d}_{33}(x_2-x_1)(y_3-y_1) & \bar{d}_{22}(x_1-x_3)(x_2-x_1) + \bar{d}_{33}(y_1-y_2)(y_3-y_1) \\
\bar{d}_{11}(y_1-y_2)(y_2-y_3) + \bar{d}_{33}(x_2-x_1)(x_3-x_2) & \bar{d}_{12}(x_3-x_2)(y_1-y_2) + \bar{d}_{33}(x_2-x_1)(y_2-y_3) & \bar{d}_{11}(y_1-y_2)(y_3-y_1) + \bar{d}_{33}(x_1-x_3)(x_2-x_1) & \bar{d}_{12}(x_1-x_3)(y_1-y_2) + \bar{d}_{33}(x_2-x_1)(y_3-y_1) & \bar{d}_{11}(y_1-y_2)^2 + \bar{d}_{33}(x_2-x_1)^2 & \bar{d}_{12}(x_2-x_1)(y_1-y_2) + \bar{d}_{33}(x_2-x_1)(y_1-y_2) \\
\bar{d}_{21}(x_2-x_1)(y_2-y_3) + \bar{d}_{33}(x_3-x_2)(y_1-y_2) & \bar{d}_{22}(x_2-x_1)(x_3-x_2) + \bar{d}_{33}(y_1-y_2)(y_2-y_3) & \bar{d}_{12}(x_2-x_1)(y_3-y_1) + \bar{d}_{33}(x_1-x_3)(y_1-y_2) & \bar{d}_{22}(x_1-x_3)(x_2-x_1) + \bar{d}_{33}(y_1-y_2)(y_3-y_1) & \bar{d}_{21}(x_2-x_1)(y_1-y_2) + \bar{d}_{33}(x_2-x_1)(y_1-y_2) & \bar{d}_{22}(x_2-x_1)^2 + \bar{d}_{33}(y_1-y_2)^2
\end{bmatrix}$$

Table AIC.14. Linear strain rectangular element

Rectangular four-noded element

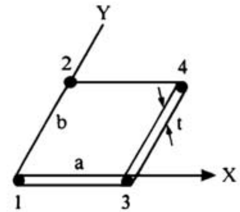

$$
[K] = \frac{t}{12}\begin{bmatrix}
4\bar{d}_{11}/(a/b) + 4\bar{d}_{33}(a/b) & & & & & & & \\
3\bar{d}_{21} + 3\bar{d}_{33} & 4\bar{d}_{22}(a/b) + 4\bar{d}_{33}/(a/b) & & & & \text{symmetric} & & \\
2\bar{d}_{11}/(a/b) - 4\bar{d}_{33}(a/b) & 3\bar{d}_{21} - 3\bar{d}_{33} & 4\bar{d}_{11}/(a/b) + 4\bar{d}_{33}(a/b) & & & & & \\
-3\bar{d}_{21} + 3\bar{d}_{33} & -4\bar{d}_{22}(a/b) + 2\bar{d}_{33}/(a/b) & -3\bar{d}_{21} - 3\bar{d}_{33} & 4\bar{d}_{22}(a/b) + 4\bar{d}_{33}/(a/b) & & & & \\
-4\bar{d}_{11}/(a/b) + 2\bar{d}_{33}(a/b) & -3\bar{d}_{21} + 3\bar{d}_{33} & -2\bar{d}_{11}/(a/b) - 2\bar{d}_{33}(a/b) & 3\bar{d}_{21} + 3\bar{d}_{33} & 4\bar{d}_{11}/(a/b) + 4\bar{d}_{33}(a/b) & & & \\
3\bar{d}_{21} - 3\bar{d}_{33} & 2\bar{d}_{22}(a/b) - 4\bar{d}_{33}/(a/b) & 3\bar{d}_{21} + 3\bar{d}_{33} & -2\bar{d}_{22}(a/b) - 2\bar{d}_{33}/(a/b) & -3\bar{d}_{21} - 3\bar{d}_{33} & 4\bar{d}_{22}(a/b) + 4\bar{d}_{33}/(a/b) & & \\
-2\bar{d}_{11}/(a/b) - 2\bar{d}_{33}(a/b) & -3\bar{d}_{21} - 3\bar{d}_{33} & -4\bar{d}_{11}/(a/b) + 2\bar{d}_{33}(a/b) & 3\bar{d}_{21} - 3\bar{d}_{33} & 2\bar{d}_{11}/(a/b) - 4\bar{d}_{33}(a/b) & -3\bar{d}_{21} + 3\bar{d}_{33} & 4\bar{d}_{11}/(a/b) + 4\bar{d}_{33}(a/b) & \\
-3\bar{d}_{21} - 3\bar{d}_{33} & -2\bar{d}_{22}(a/b) - 2\bar{d}_{33}/(a/b) & -3\bar{d}_{21} + 3\bar{d}_{33} & 2\bar{d}_{22}(a/b) - 4\bar{d}_{33}/(a/b) & 3\bar{d}_{21} - 3\bar{d}_{33} & -4\bar{d}_{22}(a/b) + 2\bar{d}_{33}/(a/b) & 3\bar{d}_{21} + 3\bar{d}_{33} & 4\bar{d}_{22}(a/b) + 4\bar{d}_{33}/(a/b)
\end{bmatrix}
$$

Table AIC.15. The rectangular finite element for plate flexure.

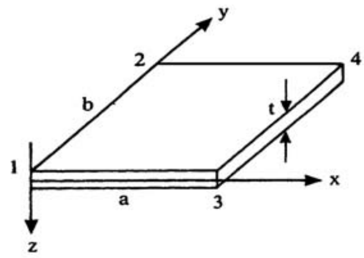

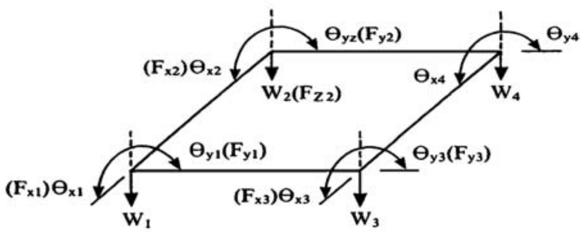

$$
\begin{aligned}
w &= \text{displacement} \\
&= a_1 + a_2 x + a_3 y + a_4 x^2 + a_5 xy + a_6 y^2 \\
&\quad + a_7 x^3 + a_8 x^2 y + a_9 x y^2 + a_{10} y^3 \\
&\quad + a_{11} x^3 y + a_{12} x y^3
\end{aligned}
$$

$$\theta_x = -\partial w/\partial y \qquad \theta_y = \partial w/\partial x$$

$$\{\delta_1\} = \begin{Bmatrix} \theta_{x_1} \\ \theta_{y_1} \\ w_1 \end{Bmatrix} \text{ etc.}$$

$$\{F_1\} = \begin{Bmatrix} F_{x_1} \\ F_{y_1} \\ F_{z_1} \end{Bmatrix} \text{ etc.}$$

$$[K] = \begin{bmatrix} L^{\mathrm{I}} & & & \\ L^{\mathrm{II}} & L^{\mathrm{III}} & & \\ L^{\mathrm{IV}} & L^{\mathrm{V}} & L^{\mathrm{VI}} & \\ L^{\mathrm{VII}} & L^{\mathrm{VIII}} & L^{\mathrm{IX}} & L^{\mathrm{X}} \end{bmatrix}$$

$$[L^{\mathrm{I}}] = \begin{bmatrix} A & & \\ -B & C & \\ -D & E & F \end{bmatrix} \qquad [L^{\mathrm{II}}] = \begin{bmatrix} G & H & I \\ J & K & L \\ M & N & O \end{bmatrix}$$

$$[L^{\mathrm{III}}] = \begin{bmatrix} A & & \\ B & C & \\ D & E & F \end{bmatrix} \qquad [L^{\mathrm{IV}}] = \begin{bmatrix} P & Q & R \\ S & T & S' \\ X & Y & Z \end{bmatrix}$$

$$[L^{\mathrm{V}}] = \begin{bmatrix} G' & H' & I' \\ J' & K' & L' \\ M' & N' & O' \end{bmatrix} \qquad [L^{\mathrm{VI}}] = \begin{bmatrix} A & & \\ B & C & \\ -D & -E & F \end{bmatrix}$$

$$[L^{\mathrm{VII}}] = \begin{bmatrix} G' & H' & -I' \\ J' & K' & L' \\ M' & -N' & O' \end{bmatrix} \qquad [L^{\mathrm{VIII}}] = \begin{bmatrix} P & Q & -R \\ S & T & S' \\ -X & Y & Z \end{bmatrix}$$

$$[L^{\mathrm{IX}}] = \begin{bmatrix} G & H & I \\ J & K & -L \\ -M & -N & O \end{bmatrix} \qquad [L^{\mathrm{X}}] = \begin{bmatrix} A & & \\ -B & C & \\ D & -E & F \end{bmatrix}$$

$$H = 0 = J \qquad Q = O = S \qquad H' = 0 = J'$$

$$A = 20a^2 D_y + 8b^2 D_{xy} \qquad P = 10a^2 D_y - 8b^2 D_{xy}$$

$$B = 15abD_1$$

$$R = -15\frac{a^2}{b} D_y + 15bD_1 + 6bD_{xy}$$

$$C = 20b^2 D_x + 8a^2 D_{xy}$$

$$G' = 5a^2 D_y + 2b^2 D_{xy}$$

$$D = 30\frac{a^2}{b} D_y + 15bD_1 + 6bD_{xy}$$

$$M' = 15\frac{a^2}{b} D_y - 6bD_{xy}$$

$$E = 30\frac{b^2}{a} D_x + 15aD_1 + 6aD_{xy} \qquad T = 10b^2 D_x - 2a^2 D_{xy}$$

$$F = 60\frac{b^2}{a^2} D_x + 60\frac{b^2}{a^2} D_y + 30D_1 + 84D_{xy} \qquad Y = 30\frac{b^2}{a} D_x + 6aD_{xy}$$

$$G = 10a^2 D_y - 2b^2 D_{xy} \qquad K' = 5b^2 D_x + 2a^2 D_{xy}$$

$$I = -30\frac{a^2}{b} D_y - 6bD_{xy} \qquad N' = 15\frac{b^2}{a} D_x - 6aD_{xy}$$

$$K = 10b^2 D_x - 8a^2 D_{xy}$$

$$Z = 60\frac{b^2}{a^2} D_x + 30\frac{a^2}{b^2} D_y - 30D_1 - 84D_{xy}$$

$$L = 15\frac{b^2}{a} D_x - 15aD_1 - 6aD_{xy}$$

$$O' = -30\frac{b^2}{a^2} D_x - 30\frac{a^2}{b^2} D_y + 30D_1 + 84D_{xy}$$

$$O = 30\frac{b^2}{a} - 60\frac{a^2}{b^2} D_y - 30D_1 - 84D_{xy}$$

Table AIC.16. Stress and strain transformation matrices

$\{T''_\sigma\}\{T''_\varepsilon\}$

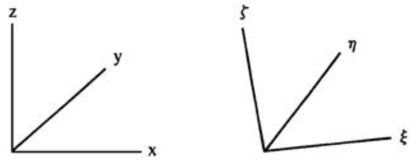

Global axis   Local axis

	x	y	z
ξ	l_1	m_1	n_1
η	l_2	m_2	n_2
ζ	l_3	m_3	n_3

Direction cosines of the two axes are given by:

$$l_1 = \cos(\xi, x) \qquad m_1 = \cos(\xi, y) \qquad n_1 = \cos(\xi, z)$$
$$l_2 = \cos(\eta, x) \qquad m_2 = \cos(\eta, y) \qquad n_2 = \cos(\eta, z)$$
$$l_3 = \cos(\zeta, x) \qquad m_3 = \cos(\zeta, y) \qquad n_3 = \cos(\zeta, z)$$

The following relationships can be written for local and global strain and stress vectors:

$$\{\varepsilon'_x\} = [T_\varepsilon]\{\varepsilon_x\} \qquad \{\sigma_x\} = [T_\varepsilon]^T\{\sigma'_x\}$$

and also

$$\{\sigma'_x\} = [T_\sigma]\{\sigma_x\} \qquad \{\varepsilon_x\} = [T_\sigma]^T\{\varepsilon'_x\}$$

$$[T''_\varepsilon] = \begin{bmatrix} l_1^2 & m_1^2 & n_1^2 & l_1m_1 & m_1n_1 & l_1n_1 \\ l_2^2 & m_2^2 & n_2^2 & l_2m_2 & m_2n_2 & l_2n_2 \\ l_3^2 & m_3^2 & n_3^2 & l_3m_3 & m_3n_3 & l_3n_3 \\ 2l_1l_2 & 2m_1m_2 & 2n_1n_2 & l_1m_2 + l_2m_1 & m_1n_2 + m_2n_1 & l_1n_2 + l_2n_1 \\ 2l_2l_3 & 2m_2m_3 & 2n_2n_3 & l_2m_3 + l_3m_2 & m_2n_3 + n_2m_3 & l_2n_3 + l_3n_2 \\ 2l_1l_3 & 2m_1m_3 & 2m_1n_3 & l_1m_3 + m_1l_3 & m_1n_3 + m_3n_1 & l_1n_3 + n_1l_3 \end{bmatrix}$$

$$[T''_\sigma] = \begin{bmatrix} l_1^2 & m_1^2 & n_1^2 & 2l_1m_1 & 2m_1n_1 & 2l_1n_1 \\ l_2^2 & m_2^2 & n_2^2 & 2l_2m_2 & 2m_2n_2 & 2l_2n_2 \\ l_3^2 & m_3^2 & n_3^2 & 2l_3m_3 & 2m_3n_3 & 2l_3n_3 \\ l_1l_2 & m_1m_2 & n_1n_2 & l_1m_2 + l_2m_1 & m_1n_2 + n_1m_2 & l_1n_2 + l_2n_1 \\ l_2l_3 & m_2m_3 & n_2n_3 & l_2m_3 + l_3m_2 & m_2n_3 + n_2m_3 & l_2n_3 + l_3n_2 \\ l_1l_3 & m_1m_3 & n_1n_3 & l_1m_3 + l_3m_1 & m_1n_3 + m_3n_1 & l_1n_3 + n_1l_3 \end{bmatrix}$$

Appendix ID: Criteria for convergence and acceleration

Convergence criteria

To ensure convergence to the correct solution by finer sub-division of the mesh, the assumed displacement function must satisfy the convergence criteria given below:

(a) Displacements must be continuous over element boundaries.
(b) Rigid body movements should be possible without straining.
(c) A state of constant strain should be reproducible.

Euclidean norm $\psi_i / R_i \leq C$. The term ψ_i represents the unbalanced forces and the norm of the residuals. With the aid of the iterative scheme described above, the unbalanced forces due to the initial stresses $\{\sigma_0\}$ become negligibly small. As a measure of their magnitude, the norm of the vector $||\psi_i||$ is used. The Euclidean norm and the absolute value of the largest component of the vector are written as

$$||\psi_i|| = (|\psi_1|^2 + \cdots + |\psi_n|^2)^{1/2} \tag{1}$$

$$||R_i|| = (|\{R_i\}^T \{R_i\}|)^{1/2}$$

the convergence criterion adopted is

$$||\psi|| = \max_i |\psi_i| < C = 0.001 \tag{2}$$

Uniform acceleration

Various procedures are available for accelerating the convergence of the modified Newton–Raphson iterations. Figure AIII.1 shows the technique of computing individual acceleration factors, δ_1 and δ_2 are known. Then, assuming a constant slope of the response curve, and from similar triangles, the value of δ_3 is computed.

$$\frac{\delta_1}{\delta_2} = \frac{\delta_2}{\delta_3} \qquad \delta_3 = \delta_2 \frac{\delta_2}{\delta_1} \tag{3}$$

When δ_3 is added to δ_2, then the accelerated displacement δ_2' is expressed as

$$\delta_2' = \delta_2 + \delta_3 = \delta_2 \left(1 + \frac{\delta_2}{\delta_1}\right) = \alpha \delta_2 \tag{4}$$

where the acceleration factor α is

$$\alpha = 1 + \frac{\delta_2}{\delta_1} \tag{5}$$

Generally the range of α is between 1 and 2. The value of $\alpha = 1$ for zero acceleration, and the value of α reaches the maximum value of 2 when the slope of the δ–R curve approaches zero.

The acceleration factor α is computed individually for every degree of freedom of the system. The displacement vector obtained from the linear stiffness matrix $[k_0]$ is then multiplied by the $[\alpha]$ matrix having the above constants on its diagonals. The remaining components of $[\alpha]$ are zero. The accelerated displacement vector is then expressed as follows:

$$\{\Delta u_i'\} = [a_{i-1}]\{\Delta u_i\} \tag{6}$$

From these accelerated displacements $\{\Delta u_i'\}$, the initial stresses $\{\sigma_0\}$ are found and they are equilibrated with the forces $\{\psi_i\}$. They are then used for the next solution

$$\{\Delta \bar{u}_i\} = [k_0]^{-1}\{\psi_i\} \tag{7}$$

which results in a new set of acceleration factors. Now an estimate for the displacement increment is made in order to find the incremental stresses and total stresses.

The residual forces needed to re-establish equilibrium can now easily be evaluated

$$\{\hat{\psi}_i\} = \int_v [B]^T \{\sigma_{0_T}\} \, dV - \{R_i\} \tag{8}$$

where $\{R_i\}$ represents the total external load; dV is the volume.

A new displacement now results from

$$\{\Delta u_{i+1}\} = -[k_0]^{-1}\{\hat{\psi}_i\} \tag{9}$$

In order to carry out these iterative steps, numerical integration is required. First of all the evaluation of $\{\hat{\psi}_i\}$ from the initial stresses is required, and this requires integration over the elastic–plastic region only. The value of $\{\hat{\psi}_i\}$ is computed by carrying out the integration over the entire domain of the analysis. Since these kinds of accelerated steps unbalance the equilibrium, therefore it has to be re-established by finding the residual forces $\{\hat{\psi}_i\}$. Since the state of stress produced by the accelerated displacements is not in balance with the residual forces of the previous iteration, the new residual forces $\{\hat{\psi}_i\}$ of Equation 9 must balance $\{\sigma_T\}$ and $\{R_i\}$. Here the acceleration scheme is needed to preserve equilibrium, which will eventually make the equivalent forces over the whole region unnecessary. This is achieved by applying a uniform acceleration, i.e. the same acceleration factor $\bar{A}$ to all displacements, found by averaging the individual factors α_i

$$\bar{A} = \frac{1}{n}\sum_{i=1}^{n} \alpha_i \tag{10}$$

The force–displacement equation is then written by multiplying both sides with the scalar quantity $\bar{A}$ without disturbing the equilibrium.

$$\bar{A}\{\Delta u_i\} = [k_0]^{-1}\bar{A}\{\psi_i\} \tag{11}$$

Now to evaluate $\{\psi_{i+1}\}$, the previous value of $\{\psi_i\}$ must be multiplied by $\bar{A}$, and the previously accelerated forces from the initial stresses $\{\sigma_0\}$ must be included such that

$$\{\psi_{i+1}\} = \int_V [B]^T \{\sigma_0\} \, dV - (A-1)\{\psi_{i-1}\} \tag{12}$$

Appendix II

Computer Programs

```
      IND.EQ.0, PRINT DISPL/VEL/ACC AT ALL NODES
      IND.NE.0, PRINT DISPL/VEL/ACC ONLY AT NODES
                CONTAINED IN PRINTOUT BLOCKS

      COMMON /EL/ IND,ICOUNT,NPAR(20),NUMEG,NEGL,NEGNL,IMASS,IDAMP,ISTAT,
     1           NDOFDM,KLIN,IEIG,IMASSN,IDAMPN
      COMMON /PRCON/ NPB,IDC,IVC,IAC,IPC,IPNODE(2,8)
      DIMENSION DISP(NEQ),VEL(NEQ),ACC(NEQ),ID(NDOF,1)
      DIMENSION D(6)

      READ ID ARRAY INTO CORE

      REWIND 8
      NDBLK = NUMNP
      READ (8) ((ID(I,J),I = 1,NDOF),J = 1,NUMNP)

      PRINT DISPLACEMENTS

      IC = 4
      IF (IND.EQ.0) GO TO 10
      IF (IND.EQ.0) GO TO 180
   10 WRITE (6,2000)
      WRITE (1,2000)
      IC = IC + 5
      DO 150 IB = 1,NPB
      NODE1 = IPNODE(1,IB)
      IF (NODE1.EQ.0) GO TO 150
      NODE2 = IPNODE(2,IB)
      IF (IND.EQ.0) NODE1 = 1
      IF (IND.EQ.0) NODE2 = NUMNP

      DO 100 II = NODE1,NODE2
      IC = IC + 1
      IF (IC.LT.56) GO TO 105
      WRITE (6,2045)

      WRITE (1,2045)
      IC = 4
  105 DO 110 I = 1,6
  110 D(I) = 0.
      DO 120 I = 1,NDOF
      KK = ID(I,II)
      IL = I
      IF (NDOF.EQ.2) IL = I + 1
  120 IF (KK.NE.0) D(IL) = DISP(KK)
      WRITE (1,2010) II,D
  100 WRITE (6,2010) II,D

      IF (IND.EQ.0) GO TO 180
      IF (IC.GE.55) GO TO 150
      IC = IC + 1
      WRITE (6,2050)
      WRITE (1,2050)
  150 CONTINUE
  180 IF (ISTAT.EQ.0) RETURN
      PRINT VELOCITIES
      IF (IND.EQ.0) GO TO 201
      IF (IVC.EQ.0) GO TO 280
  201 IC = IC + 5 + IDC
      IF (IDC.NE.0) WRITE (6,2050)
      IF (IDC.NE.0) WRITE (1,2050)
      IF (IC.GE.54) GO TO 205
      WRITE (6,2020)
      WRITE (1,2020)
      GO TO 206
  205 WRITE (6,2022)
      WRITE (1,2022)
      IC = 4
  206 DO 250 IB = 1,NPB
      NODE1 = IPNODE(1,IB)
      IF (NODE1.EQ.0) GO TO 250
      NODE2 = IPNODE(2,IB)
      IF (IND.EQ.0) NODE1 = 1
      IF (IND.EQ.0) NODE2 = NUMNP

      DO 200 II = NODE1,NODE2
      IC = IC + 1
      IF (IC.LT.56) GO TO 207
      WRITE (6,2022)
      WRITE (1,2022)
      IC = 4
  207 DO 210 I = 1,6
  210 D(I) = 0.
      DO 220 I = 1,NDOF
      KK = ID(I,II)
      IL = I
      IF (NDOF.EQ.2) IL = I + 1
  220 IF (KK.NE.0) D(IL) = VEL(KK)
      WRITE (1,2010) II,D
  200 WRITE (6,2010) II,D

      IF (IND.EQ.0) GO TO 280
      IF (IC.GE.55) GO TO 250
      IC = IC + 1
      WRITE (6,2050)
      WRITE (1,2050)

  250 CONTINUE

      PRINT ACCELERATIONS

  280 IF (IND.EQ.0) GO TO 290
      IF (IAC.EQ.0) RETURN
      IF (IDC.EQ.0 .AND. IVC.EQ.0) GO TO 305
  290 IC = IC + 6
      IF (IC.GE.54) GO TO 303
      WRITE (6,2050)
      WRITE (1,2050)
      WRITE (6,2030)
      WRITE (1,2030)
      GO TO 308
  303 WRITE (6,2032)
      WRITE (1,2032)
      IC = 4
      GO TO 308
  305 IC = IC + 5
      WRITE (6,2030)
      WRITE (1,2030)
  308 DO 350 IB = 1,NPB
      NODE1 = IPNODE(1,IB)
      IF (NODE1.EQ.0) GO TO 350
      NODE2 = IPNODE(2,IB)
      IF (IND.EQ.0) NODE1 = 1
      IF (IND.EQ.0) NODE2 = NUMNP

      DO 300 II = NODE1,NODE2
      IC = IC + 1
      IF (IC.LT.56) GO TO 307
      WRITE (6,2032)
      WRITE (1,2032)
      IC = 4
  307 DO 310 I = 1,6
  310 D(I) = 0.
      DO 320 I = 1,NDOF
      KK = ID(I,II)
      IL = I
      IF (NDOF.EQ.2) IL = I + 1
  320 IF (KK.NE.0) D(IL) = ACC(KK)
      WRITE (1,2010) II,D
  300 WRITE (6,2010) II,D

      IF (IND.EQ.0) RETURN
      IF (IC.GE.55) GO TO 350
      IC = IC + 1
      WRITE (6,2050)
      WRITE (1,2050)
  350 CONTINUE

      RETURN
```

Table AII.1. Program ISOPAR to print displacements and (if ISTAT.NE.0) velocities and accelerations (Jointly developed by J. Tang and the author.).

Table AII. 1. Algorithm for principal stresses

Principal stresses and direction cosines D1, D2, D3 are the direction cosines of principal stresses PS1, PS2, PS3

```
      IF (X5 .GE. X6 .AND. X6 .GE. X7) GOTO 430
      IF (X5 .GE. X7 .AND. X7 .GE. X6) GOTO 431
      IF (X6 .GE. X5 .AND. X5 .GE. X7) GOTO 432
      IF (X6 .GE. X7 .AND. X7 .GE. X5) GOTO 433
      IF (X7 .GE. X5 .AND. X5 .GE. X6) GOTO 434
      IF (X7 .GE. X5 .AND. X6 .GE. X5) GOTO 435
430   X1 = X5
      X2 = X6
      X3 = X7
      GOTO 438
431   X1 = X5
      X2 = X7
      X3 = X6
      GOTO 438
432   X1 = X6
      X2 = X5
      X3 = X7
      GOTO 438
433   X1 = X6
      X2 = X7
      X3 = X5
      GOTO 438
434   X1 = X7
      X2 = X5
      X3 = X6
      GOTO 438
435   X1 = X7
      X2 = X6
      X3 = X5
438   CONTINUE
      PRINCIPAL STRESSES
      PS1(IPT) = X1
      PS2(IPT) = X2
      PS3(IPT) = X3
      DO 440 IS = 1,3
      GOTO (443,445,447),IS
443   AS1 = G1 - X1
      AS2 = G2 - X1
      AS3 = G3 - X1
      GOTO 444
445   AS1 = G1 - X2
      AS2 = G2 - X2
      AS3 = G3 - X2
      GOTO 444
447   AS1 = G1 - X3
      AS2 = G2 - X3
      AS3 = G3 - X3
444   CONTINUE
      AK = G4
      BK = G5
      CK = G6
      YAP1 = AS2*CK - BK*AK
      YAP2 = AK*AK - AS1*AS2
      IF (YAP1 .EQ. 0.0) YAP1 = 1.0
      IF (YAP2 .EQ. 0.0) YAP2 = 1.0
      BJM1 = (BK*BK - AS2*AS3)/YAP1
      BJM2 = (AS1*BK - AK*CK)/YAP2
      BJ1 = BJM1*BJM1
      BJ2 = BJM2*BJM2
      ZIP = DSQRT(BJ1 + BJ2 + 1.0)
```

Material matrix

```
      IMPLICIT REAL*8(A - H,O - Z)
      COMMON /MTMD3D/ D(6,6),STRESS(6),STRAIN(6),IPT,NEL
      DIMENSION PROP(1),DS(6,6),SIG(1),EPS(1),NCK(1),PS1(1),PS2(1),
     1          PS3(1),DC1(1),DC2(1),DC3(1)
      DO 111 II = 1,6
      DO 111 JJ = 1,6
 111  DS(II,JJ) = 0.0
      DS(1,1) = PROP(9)/PROP(6)*PROP(2)
      DS(2,2) = PROP(10)/PROP(7)*PROP(2)
      DS(3,3) = PROP(11)/PROP(8)*PROP(2)
      CALL TESTCK (PROP,SIG,EPS,NCK,PS1,PS2,PS3,DC1,DC2,DC3)
      IF (NCK(1) EQ. 1 .OR. NCK(2) .EQ. 1 .OR. NCK(3) .EQ. 1)
     @    GOTO 220
      CALL DMAT(PROP,NCK)
 220  DO 222 III = 1,6
      DO 222 JJJ = 1,6
 222  D(III,JJJ) = D(III,JJJ) + DS(III,JJJ)
      RETURN
      END
```

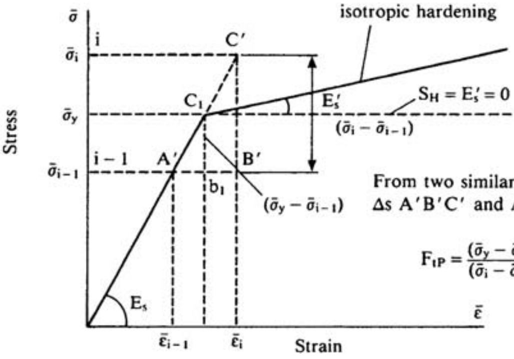

S_{H} = strain hardening

$$S_{\mathrm{H}} = \frac{\mathrm{d}\sigma}{\mathrm{d}\varepsilon_{\mathrm{p}}} = \frac{E_{\mathrm{s}}E'_{\mathrm{s}}}{E_{\mathrm{s}} + E}$$

$$E_{\mathrm{s}} = K_0$$

Figure AII.1. Equivalent stress-strain curve for steel (E_s = initial yield modulus; E'_s = post-yield modulus.).

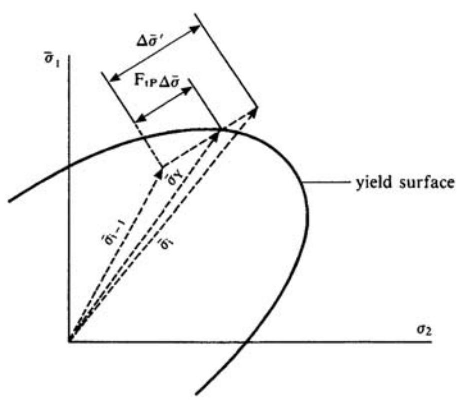

Figure AII.2. Failure surface.

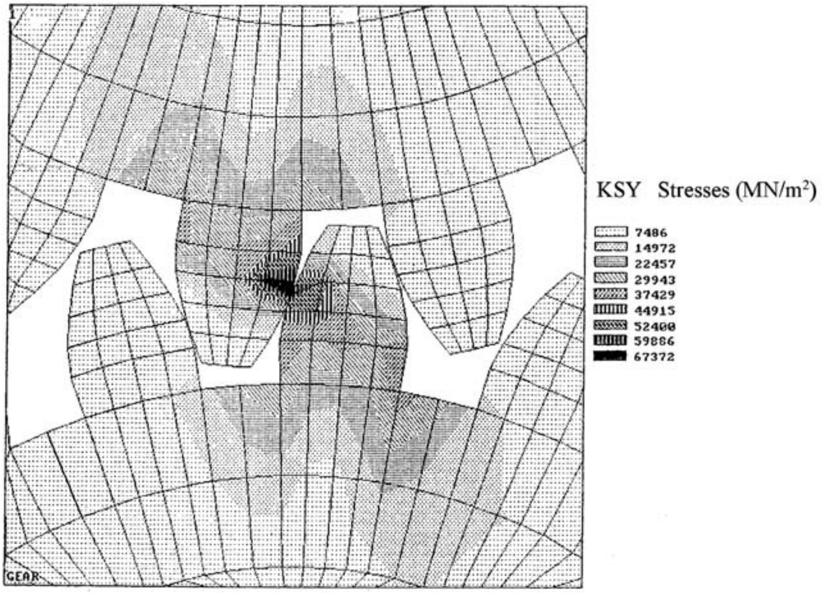

Figure AII.3. Distribution of Equivalent stresses in Gear using quadratic Isoparametric Finite Element.

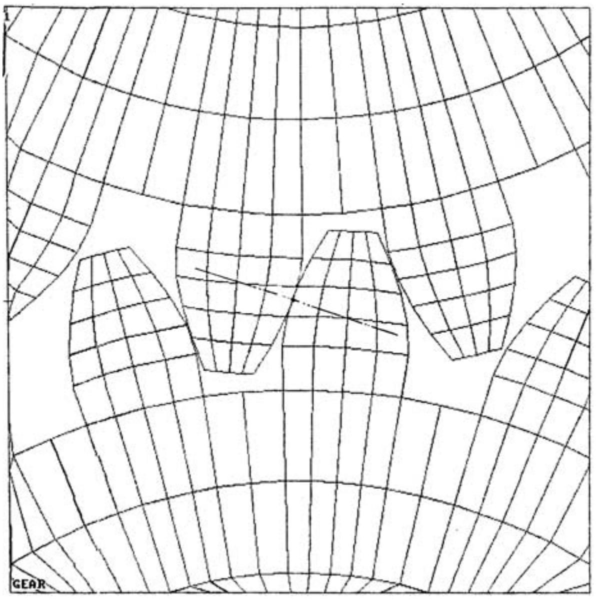

Figure AII.4. Finite Element modelling of gear and teeth using a mixture of Isoparametric 20 noded and prismatic Elements with tips.

. 1.7(d) ISOPAR finite-element program: subroutine

```
      INTEGER*4 MT1,MT2
      IMPLICIT REAL*8(A-H,O-Z)
      COMMON/BBB/ D(6,6),D1(6,6),E(12,3),POIS(12,6),MCODE(12,20),
     1            EK(60,60) ,H(6,60),LRF(12),IDENT(12),RAW(1),EM(60,60)
      COMMON/LID/ SK(366,165),SM(366,165),SKK(1,1)
      COMMON/BON/ NNODE, NEUB,NETB,NBLOK
      COMMON/REL/ U(366),P(366),PT(366),U1(366),U10(366),U2(366)
     1  ,U20(366),U0(366),P1(366),PS(366),PIU(366),PIT(366)
      COMMON/CCC/ X(128),Y(128),Z(128),NZN(366) ,NFIX(366) ,
     1 AST(12),EST(12),DIA(12),ELINE(6,6),ELINK(6,6)
      COMMON/AAA/ NEL,NNP,NEQ,NHBD,NBC,NTE1,NTE2,NTE3,NTE4,
     1 NNE1,NNE2,NNE3,NNE4,NDF,NRF,NRS,DETJ
      COMMON/GSS/ ZETA(27), ETA(27), ZI(27), W(27), NGP
C ISOPARAMETRIC ELEMENTS REPRESENT V   CONCRETE OF THE VESSEL
CLINE ELEMENTS REPRESENT PRESTRESSING CABLES AND REINFORCEMENTS
C LINKAGE ELEMENTS REPRESENT NON-LINEAR BOND
C+++++
      CALL CTIM£A(MT1)
C...      NBC NUMBER OF BOUNDARY CONDITIONS
C...      NDF        NUMBER OF DEGREES OF FREEDOM PER NODE
C...      NEL        TOTAL NUMBER OF ELEMENTS
C...      NGP        NUMBER OF GAUSS POINTS FOR INTEGRATION
C...      NNE1       NUMBER OF NODES IN ELEMENT TYPE 1 **20 NODED ISOP**
C...      NNE2                                   2
      CALL TIMING(1)
C+++++
      READ(5, *)NNP,NTE1,NTE2,NTE3,NNE1,NNE2,NNE3,NRF,NBC,NDF,NGP,NRS,
CXXXXX
     1  NNE4 ,NTE4, NTYPE
   10 FORMAT(15I3)
      NEL=NTE1
      WRITE (6,15) NEL,NNP,NTE1,NTE2,NTE3,NNE1,NNE2,NNE3,NRF,NBC,NDF,NGP
     1,   NRS
15    FORMAT(1H1,20X,37HNUMBER OF ELEMENTS                        =,I5//
     1             20X,37HNO OF NODAL POINTS                      =,I5//
     2             20X,37HNO OF TYPE 1 ELEMENT                    =,I5//
     3             20X,37HNO OF TYPE 2 ELEMENT                    =,I5//
     4             20X,37HNO OF TYPE 3 ELEMENT                    =,I5//
     5             20X,37HNO OF NODESIN TYPE1 ELEMENT             =,I5//
     6             20X,37HNO OF NODESIN TYPE2 ELEMENT             =,I5//
     7             20X,37HNO OF NODESIN TYPE3 ELEMENT             =,I5//
     8             20X,36HSECTION REFERENCE FOR TYPE1 ELEMENT=,I5//
     9             20X,37HNO OF BOUNDARY CONDITIONS               =,I5//
     1             20X,35H NO OF DEGREES OF FREEDOM PER NODE=,I5//
     1             20X,37HNO OF GASS POINTS FOR INTEGRATION   =,I5//
     1             20X,38HSECTION REFERENCE FOR TYPE2 ELEMENT  =,I5////)
      CALL INPUT
C+++++
      CALL BAND
C+++++
      CALL GAUSS
C+++++
      CALL MACRO
C+++++
      CALL TIMING(2)
C+++++
      CALL CTIM£A(MT2)
C+++++
      RT = FLOAT((MT2-MT1)/100.)
      WRITE(6,1000) MT2,MT1,RT
C####
1000  FORMAT('CPUTIME AT THE END OF EXECUTION =',I10,'CENTISECS'/
     1    'CPU TIME AT THE START OF EXECUTION =',I10,'CENTISECS'/
     2    'CPU TIME TAKEN TO EXECUTE THE PROGRAM    =',F10.2,'SECS'/)
      CALL EXIT
C+++++
      END
C££££££££££££££££££££
      SUBROUTINE INPUT
C...     THIS ROUTINE IS CODED BY THIRU (29/10/80)
      IMPLICIT REAL*8(A-H,O-Z)
C££££££££££££££££££££
      LOGICAL PCOMP,DYN
      COMMON/CCC/ X(128),Y(128),Z(128),NZN(366) ,NFIX(366) ,
     1 AST(12),EST(12),DIA(12),ELINE(6,6),ELINK(6,6)
      COMMON/SEP/ NDI(366), JRC(3),XJN(12)
      COMMON/BON/ NNODE, NEUB,NETB,NBLOK
      COMMON/AAA/ NEL,NNP,NEQ,NHBD,NBC,NTE1,NTE2,NTE3,NTE4,
     1 NNE1,NNE2,NNE3,NNE4,NDF,NRF,NRS,DETJ
      COMMON/BBB/ D(6,6),D1(6,6),E(12,3),POIS(12,6),MCODE(12,20),
     1            EK(60,60) ,H(6,60),LRF(12),IDENT(12),RAW(1),EM(60,60)
      COMMON/GSS/ ZETA(27), ETA(27), ZI(27), W(27), NGP
      DIMENSION WD(10)
      DATA WD/4HCOOR,4HELEM,4HMATE,4HBOUN,4HFORC,
     1        4HTEMP,4HEND ,4HPRIN,4HNOPR,4HPAGE/
      DATA LIST/10/
C...     DYN         =.FALSE. - STATIC LOADING
200   READ(5,201)CC
CXXXXX
201   FORMAT(A4,75X,A1)
      DO 202 I2=1,LIST
202   IF(PCOMP(CC,WD(I2))) GO TO 203
      GO TO 200
203   GO TO(204,205,206,207,208,209,210,211,212,213),I2
C...  NODAL COORDINATE INPUT
204   WRITE(6,30)
C#####
30    FORMAT(5X,'NODES',10X,'X-COORDINATE',10X,'Y-COORDINATE',
     1     10X,'Z-COORDINATE')
      DO 418 II=1,NNP
      READ(5,*)II,X(II),Y(II),Z(II)
CXXXXX
301   FORMAT(I5,3F10.4)
      WRITE(6,302)II,X(II),Y(II),Z(II)
C#####
418   CONTINUE
302   FORMAT(5X,I4,3(8X,F13.4))
      GO TO  200
C...  CONECTIVITY
205   CONTINUE
      DO 1 I=1,NTE1
1     IDENT(I)=1
      READ(5,*) (LRF(I),I=1,NTE1)
CXXXXX
16    FORMAT(4I2)
66    FORMAT(5X,I5,5X,8I5,18X,I3,14X,I5)
C
      WRITE(6,60)
C#####
60    FORMAT(1H1,5X,'ELEMENT NO.',10X,'CONNECTIVITY ARRAYS(NODE NOS)'
     1     10X,'SECTION REFERENCE',3X,'EL IDENTIFICATION')
      DO 400 I=1,NTE1
      READ(5,*)I,(MCODE(I,J),J=1,NNE1)
CXXXXX
400   CONTINUE
65    FORMAT(21I3)
      DO 19 I=1,NTE1
19    WRITE(6,66) I , (MCODE(I,J),J=1,NNE1)
C#####
      GO TO 200
C..      MATERIAL
206   CONTINUE
      NEQ=NNP*NDF
      WRITE(6,75)
C#####
75    FORMAT(1H1,3X,'SECTION REFERENCE',5X,'ELASTIC MODULUS OF CONCRETE',
     1     1'POISONS RATIO')
      DO 11 I=1,NRF
      READ(5,*) (E(I,J),J=1,3),(POIS(I,M),M=1,3),RAW(I)
CXXXXX
80    FORMAT(3F6.0,4F3.1)
11    WRITE(6,85)I,(E(I,J),J=1,3),(POIS(I,M),M=1,3),RAW(I)
C#####
85    FORMAT(8X,I3,12X,F10.2,2X,F10.2,2X,F10.2,4X,F4.2,2X,F4.2,2X,F4.2
     1     ,2X,F4.2)
C
C        READ YOUNG7S MODULUS FOR PRESTRESSING STEEL
CXXXXX
      GO TO  200
C...     BOUNDARY COND
207   CONTINUE
501   WRITE(5,90)
C#####
90    FORMAT(1H1,5X,'NODES',10X,'CONSTRAINTS')
      NEQ=NNP*NDF
      DO 850 I=1,NEQ
850   NZN(I)=0
      DO 855 I=1,NBC
854   READ(5,*) N,NZN(N*3-2),NZN(N*3-1),NZN(N*3)
CXXXXX
```

```
1500   FORMAT(4I2)
       WRITE(6,1400)N,NZN(N*3-2),NZN(N*3-1),NZN(N*3)
C#####
855    CONTINUE
1400   FORMAT(5X,I5,12X,3I3)
       GO TO 200
C...      LOADING
208    DYN = .FALSE.
       CALL LOAD(DYN)
C+++++
       GO TO 200
209    GO TO 200
210    RETURN
211    GO TO 200
212    GO TO 200
213    GO TO 200
       END
C££££££££££££££££££
C££££££££££££££££££££££
       SUBROUTINE GAUSS
C...      DATA FOR GAUSSIAN 2X2 AND 3X3 INTEGRATION
C££££££££££££££££££££££
       IMPLICIT REAL*8(A-H,O-Z)
       COMMON/CAP/ GE1(27),GE2(27),GE3(27),WE(4)
       COMMON/GS/ NG1
       COMMON/GSS/ ZETA(27),ETA(27),ZI(27),W(27),NGP
       IF(NGP.EQ.8) GO TO 25
       NG1=3
       G=0.774596669241483
       GE1(1)=G
       GE2(1)=G
       GE3(1)=G
       GE1(3)=-G
       GE2(3)=-G
       GE3(3)=-G
       GE1(2)=0.0
       GE2(2)=0.0
       GE3(2)=0.0
       WE(3)=0.5555555556
       WE(1)=0.5555555556
       WE(2)=0.88888888889
       GO TO 33
25     NG1=2
       WE(1)=1.0
       WE(2)=1.0
       G=-0.577350269189626
       GE1(1)= G
       GE2(1)= G
       GE3(1)= G
       GE1(2)=-G
       GE2(2)=-G
       GE3(2)=-G
33     CONTINUE
       RETURN
       END
C££££££££££££££££££££££
       SUBROUTINE ASSEMB
C££££££££££££££££££££££
       IMPLICIT REAL*8(A-H,O-Z)
        COMMON/LID/ SK(366,165),SM(366,165),SKK(1,1)
       COMMON/BBB/ D(6,6),D1(6,6),E(12,3),POIS(12,6),
     1           EK(60,60) ,H(6,60),LRF(12),IDENT(12)
       COMMON/CCC/ X(128),Y(128),Z(128),NZN(366) ,NFI
     1 AST(12),EST(12),DIA(12),ELINE(6,6),ELINK(6,6)
       COMMON/SEP/ NDI(366), JRC(3),XJN(12)
       COMMON/BON/ NNODE, NEUB,NETB,NBLOK
       COMMON/AAA/ NEL,NNP,NEQ,NHBD,NBC,NTE1,NTE2,NTE
     1 NNE1,NNE2,NNE3,NNE4,NDF,NRF,NRS,DETJ
       CALL TIMING(1)
C+++++
       NNODE=NNP
        NEUB=NEQ
       NETB=NEQ
       NBLOK=1
       MATER=0
       NEQN = 0
       DO 105 J=1,NEUB
105    NFIX(J)=NZN(J)
       DO 200 J=1, NETB
       DO 200 IJ=1, NHBD
```

```
      SK(J,IJ) = 0.0
200   CONTINUE
C                   WHEN AN ELEMENT IS PROCESSED THE SIGN OF FIRST NODE
C                   SET TO A NEGATIVE VALUE
      NFST = 1
      DO 270 NBL = 1, NBLOK
      IF(NBLOK .EQ. 1) GO TO 210
      IF(NBL .EQ. NBLOK) GO TO 245
210   CONTINUE
      NLAST = (NBL+1) * NNODF
      DO 240 I=1, NEL
C                        DETERMINE THE ELEMENT IS PROCESSED
C
      IF( MCODE(I,1) .LT. 0) GO TO 240
      LET = IDENT(I)
215   CONTINUE
      GO TO(117,118,119,120),LET
117   CALL ELSTIF(I)
C+++++
      NER=NNE1
      GO TO 121
118   CONTINUE
119   CALL LINEL(I)
C+++++
      NER = NNE3
      GO TO 121
120   CONTINUE
C                   *****FORM INDICES FOR ROW AND COLUMN OF
C                        STRUCTURE STIFFNESS MATRIX******
121   CONTINUE
      DO 225 IM = 1, NER
      IND = (IM-1)*NDF
      JND = MCODE(I,IM) - NFST+1
      KND = (JND-1)*NDF
      DO 220 IS = 1, NDF
      KND=KND+1
      NDI(IND+IS)=KND
220   CONTINUE
225   CONTINUE
C                        GIVE MINUS SIGN TO THE FIRST NODE OF THE ELEMEN
C                        BEING PROCESSED
C
C
      JP = NER * NDF
      DO 235 II = 1, JP
      NR = NDI(II)
      DO 230 JJ = 1, JP
      NCL = NDI(JJ)
      IF(NCL .LT. NR) GO TO 230
      NCL = NCL-NR+1
      GO TO(122, 123, 124, 125) ,LET
122   SK(NR,NCL)=SK(NR,NCL) + EK(II,JJ)
      GO TO 230
123   CONTINUE
      GO TO 230
124   SK(NR,NCL)=SK(NR,NCL) +EK(II,JJ)
      GO TO 230
125   SK(NR,NCL)=SK(NR,NCL) +EK(II,JJ)
230   CONTINUE
235   CONTINUE
240   CONTINUE
      IF(NBLOK  .EQ. 1) GO TO 245
      IMIN=NEUB+1
      DO 243 IS = IMIN,NETB
      IDS = IS-NEUB
      IAS=NBL*NEUB+IDS
      IF( IAS .GT. NEQ ) GO TO 245
      NFIX(IS) = NZN(IAS)
243   CONTINUE
245   CONTINUE
      IF( MATER .EQ. 0 ) GO TO 251
      WRITE(6,301)
C#####
      WRITE(6,302)NBL
C#####
      DO 250 J = 1,NEUB
      NEQN=NEQN+1
      WRITE(6,303)NEQN,(SK(J,IJ),IJ=1,NHBD)
C#####
250   CONTINUE
C
C                         THIS BLOCK GOES FOR BOUNDAR MODIFICATION
C
251   CONTINUE
      CALL BCOND
C+++++
270   CONTINUE
      DO 275 I = 1, NEL
      MCODE(I,1) = IABS(MCODE(I,1) )
275   CONTINUE
      WRITE(6,1000)
C#####
1000  FORMAT('TIME TO ASSEMBLE STIFNESS MATRIX = ')
      CALL TIMING(2)
C+++++
      IF (MATER .EQ. 0 ) RETURN
      WRITE(6,304)
C#####
      NEQN=0
      DO 285 NBL =1, NBLOK
      WRITE(6,302) NBL
C#####
      DO 280 J=1, NEUB
      NEQN = NEQN + 1
      WRITE(6,303) NEQN, (SK(J,IJ),IJ=1,NHBD)
C#####
280   CONTINUE
285   CONTINUE
      RETURN
301   FORMAT(1H1,26HSTIFFNESS MATRIX BY BLOCKS)
302   FORMAT(1H0,5HBLOCK, I3, / , 1H0,9HEQUATIONS,/)
303   FORMAT(2X, I3, 10E12.4, (/, 1X, 3X, 10E12.4))
304   FORMAT(1H1,4X,47H BLOCK FORM OF STIFFNESS MATRIX AFTER BOUN.COND)
      END
C££££££££££££££££££££
      SUBROUTINE ELSTIF(I)
C££££££££££££££££££££
      IMPLICIT REAL*8(A-H,O-Z)
       COMMON/DLE/S(20,3),CC(3,20),C(3,3)
      COMMON/AAA/ NEL,NNP,NEQ,NHBD,NBC,NTE1,NTE2,NTE3,NTE4,
     1 NNE1,NNE2,NNE3,NNE4,NDF,NRF,NRS,DETJ
      COMMON/CAP/ GE1(27),GE2(27),GE3(27),WE(4)
      COMMON/BBB/ D(6,6),D1(6,6),E(12,3),POIS(12,6),MCODE(12,20),
     1          EK(60,60) ,H(6,60),LRF(12),IDENT(12),RAW(1),EM(60,60)
      COMMON/CCC/ X(128),Y(128),Z(128),NZN(366) ,NFIX(366) ,
     1 AST(12),EST(12),DIA(12),ELINE(6,6),ELINK(6,6)
      COMMON/GSS/ ZETA(27), ETA(27), ZI(27), W(27), NGP
      COMMON /GS/NG1
      JP=NDF*NNE1
      DO 12 IS =1,60
      DO 12 JS =1,60
12    EK(IS,JS) =0.0
      CALL DMAT(I)
C+++++
      IF( NGP .EQ.  14 ) GO TO 23
C
C               (2X2X2) AND(3X3X3) GAUSS INTEGRATION
C
      DO 39   J1 = 1 , NG1
      DO  39   J2 = 1 , NG1
      DO  39   J3 = 1, NG1
      CALL ISOP2(I,J1,J2,J3,3,4)
C+++++
      DOS = WE(J1)*WE(J2)*WE(J3)*DETJ
      DO 17 N1=1,6
      DO 17 N2 =1,6
17    D(N1,N2)=DOS*D1(N1,N2)
      DO 38 II=1, JP
      DO 38 JJ=1, JP
      IF(II .GT.  JJ) GO TO 2522
      EIKJ = 0.0
      DO 37 IJ=1,6
      HTDIK = 0.0
      DO 36 JI=1,6
      HTDIK = HTDIK + H(JI,II) * D(JI,IJ)
36    CONTINUE
      EIKJ = EIKJ + HTDIK * H(IJ,JJ)
37    CONTINUE
      EK(II,JJ) = EK(II,JJ) + EIKJ
2522  CONTINUE
38    CONTINUE
```

```
      CONTINUE
      GO TO 333
      CONTINUE
      DO21 M=1, NGP
       CALL ISOP2(I,M,M,M,3,1)
 ****
   MATERIAL PROPERTY MATRIX !D" , !D" IS MULTIPLIED BY
   WEIGHTING COEFFICIENTS AND DET. OF JACOBIAN DETJ

      DOS= W(M)*DETJ
      DO 18 N1=1,6
      DO 18 N2=1,6
       D(N1,N2)=DOS*D1(N1,N2)
      DO 6  II= 1,24
      DO 5 JJ =1, 24
      IF(II .GT. JJ) GO TO 5
      EIKJ =0.0
      DO 4 IJ =1,6
      HTDIK =0.0
      DO 3 JI = 1, 6
      HTDIK = HTDIK + H( JI, II)*D(JI,IJ)

           H(JI,II)= TRANSPOSE OF  H(II,JI)

      CONTINUE
      EIKJ =EIKJ +HTDIK *H(IJ,JJ)
      CONTINUE
      EK(II,JJ) = EK(II,JJ) +EIKJ
      CONTINUE
      CONTINUE
1     CONTINUE
      GO TO  333
;     WRITE(6,10)
####
)     FORMAT(  //8X,32HTHE TERM RATIO  OR  RAT IS  ZERO)
53    CONTINUE
      DO 2523 II=1,JP
      DO 2523 JJ=1,JP
523   EK(JJ,II)=EK(II,JJ)
      THIRU=1.1
      WRITE(6,96)THIRU
####
5     FORMAT(1X,7HTHIRU==,F5.3)
      RETURN
      END
CCCCCCCCCCCCCCCCCCCCC
      SUBROUTINE DMAT(I)
...      THIS ROUTINE CALCULATES 'D' MATRIX FOR ELEMENT (I)
CCCCCCCCCCCC  CCCCC
      IMPLICIT REAL*8(A-H,O-Z)
      COMMON/BBB/ D(6,6),D1(6,6),E(12,3),POIS(12,6),MCODE(12,20),
     1           EK(60,60) ,H(6,60),LRF(12),IDENT(12),RAW(1),EM(60,60)
      N= LRF(I)
       IF(N .EQ. LIVER)RETURN
       LIVER=N
   DUE TO SYMMETRY OF THE COMPLIANCES, THREE RELATION EXIST
      POIS(N,4) = POIS(N,1)* E(N,2)/ E(N,1)
      POIS(N,5) = POIS(N,2)* E(N,3)/ E(N,2)
      POIS(N,6) =POIS(N,3)* E(N,3)/ E(N,1)
      RAT = 1.- POIS(N,1)* POIS(N,4)-POIS(N,3)* POIS(N,6)-POIS(N,2)
     1*POIS(N,5) -POIS(N  ,1) * POIS(N,2)*POIS(N,3) -
     2   POIS(N,4) * POIS(N,5) * POIS(N,6)
3     D1(1,1)= ( 1.-POIS(N,2) * POIS(N,5))* E(N,1)/ RAT
      D1(1,2)= (POIS(N,1) + POIS(N,3) * POIS(N,5))*E(N,2)/RAT
      D1(1,3)= (POIS(N,3) + POIS(N,1) * POIS(N,2))*E(N,3)/RAT
      D1(2,2)= (1.- POIS(N,3)* POIS(N,6))*E(N,2)/RAT
      D1(2,3)= (POIS(N,2) + POIS(N,3)*POIS(N,4))*E(N,3)/RAT
      D1(2,1)  = D1(1,2)
      D1(3,1) =D1(1,3)
      D1(3,2) = D1(2,3)
      D1(3,3)= (1.-POIS(N,1)*POIS(N,4))* E(N,3)/RAT
      E11 = 0.5 *(E(N,1)/ (1.+POIS(N,1)))
      E22 = 0.5 *(E(N,1)/ (    POIS(N,1) + E(N,1)/E(N,2)))
      D1(4,4)=  0.5 * (E11+ E22)
      E31 = 0.5 *  (E(N,2)/(1+ POIS(N,2)))
      E32 = 0.5 *  (E(N,2)/(E(N,2)/ E(N,3) + POIS(N,2)))
      D1(5,5)=  0.5 * (E31+ E32)
      E42 = 0.5 *(E(N,3) /(1+ POIS(N,6)))
      E43=0.5*(E(N,3)/(E(N,3)/E(N,1)+POIS(N,6)))
      D1(6,6)=0.5*(E42+E43)
      SUDM=2.0
      WRITE(6,1)((D1(I1,J),J=1,6),I1=1,6)
C#####
1     FORMAT(6(1X,E10.3)/)
      RETURN
      END
CCCCCCCCCCCCCCCCCCCCCCC
      SUBROUTINE ISOP2(I,J1,J2,J3,NEJ,NF)
CCCCCCCCCCCCCCCCCCCCCCC
      IMPLICIT REAL*8(A-H,O-Z)
      COMMON/AAA/ NEL,NNP,NEQ,NHBD,NBC,NTE1,NTE2,NTE3,NTE4,
     1 NNE1,NNE2,NNE3,NNE4,NDF,NRF,NRS,DETJ
      COMMON/DLE/S(20,3),CC(3,20),C(3,3)
      COMMON/BBB/ D(6,6),D1(6,6),E(12,3),POIS(12,6),MCODE(12,20),
     1          EK(60,60) ,H(6,60),LRF(12),IDENT(12),RAW(1),EM(60,60)
      COMMON/MEM/ SP(20),SJ(3,3)
      COMMON/CCC/ X(128),Y(128),Z(128),NZN(366) ,NFIX(366) ,
     1 AST(12),EST(12),DIA(12),ELINE(6,6),ELINK(6,6)
      COMMON/CAP/ GE1(27),GE2(27),GE3(27),WE(4)
C
      JP=NNE1*NDF
      DO 80 J=1,6
      DO 80 K=1,JP
80    H(J,K)=0.0
      S1= 1.0 + GE1(J1)
      S2= 1.0 - GE1(J1)
      S3= 1.0 + GE2(J2)
      S4= 1.0 - GE2(J2)
      S5= 1.0 + GE3(J3)
      S6= 1.0 - GE3(J3)
      A=0.125
      IF(NNE1 .EQ. 20  .OR.NNE1.EQ.32 ) GO TO 34
      IF(NEJ .GT. 2 )GO TO 81
C
      SP(1) = A*S2*S4*S6
      SP(2) = A*S1*S4*S6
      SP(3) = A*S1*S3*S6
      SP(4) = A*S2*S3*S6
      SP(5) = A*S2*S4*S5
      SP(6) = A*S1*S4*S5
      SP(7) = A*S1*S3*S5
      SP(8) = A*S2*S3*S5
      IF(NEJ .EQ. 1) RETURN
81    CONTINUE
      S(1,1) = -A*S4*S6
      S(1,2) = -A*S2*S6
      S(1,3) = -A*S4*S2
      S(2,1) = A*S4*S6
      S(2,2) = -A*S1*S6
      S(2,3) = -A*S1*S4
      S(3,1) = A*S3*S6
      S(3,2) = A*S1*S6
      S(3,3) = -A*S1*S3
      S(4,1) = -A*S3*S6
      S(4,2) = A*S2*S6
      S(4,3) = -A*S2*S3
      S(5,1) = -A*S4*S5
      S(5,2) = -A*S2*S5
      S(5,3) = A*S2*S4
      S(6,1) = A*S4*S5
      S(6,2) = -A*S1*S5
      S(6,3) = A*S1*S4
      S(7,1) = A*S3*S5
      S(7,2) = A*S1*S5
      S(7,3) = A*S1*S3
      S(8,1) = -A*S3*S5
      S(8,2) = A*S2*S5
      S(8,3) = A*S2*S3
      GO TO 38
34    CONTINUE
      S7= S1*S2
      S8 = S3*S4
      S9 = S5*S6
      S11 = GE1(J1)
      S12 = GE2(J2)
      S13 = GE3(J3)
      IF(NNE3 .EQ. 32 ) GO TO 36
      IF(NEJ .GT. 2 )GO TO 82
C
```

```
C         SHAPE FUNCTIONS FOR 20-NODE ELEMENT
      SP(1) =  A* S2* S4 *S6 *(-S11-S12- S13-2)
      SP(2) =  2*A* S7* S4*S6
      SP(3) =  A* S1* S4* S6*(S11 -S12-S13 -2)
      SP(4) =  A*2*S1*S8* S6
      SP(5) =  A*S1*S3* S6* (S11+S12 -S13 -2)
      SP(6)= 2*A*S7* S3* S6
      SP(7)=  A* S2*S3* S6*(-S11+S12-S13-2)
      SP(8)= 2*A*S2* S8 *S6
      SP(9)=  2*A*S2*S4* S9
      SP(10) = 2*A*S1* S4* S9
      SP(11)= 2*A*S1* S3* S9
      SP(12)= 2*A*S2*S3* S9
       SP(13)=A*S2*S4*S5*(-S11-S12+S13-2.)
      SP(14) =  2*A * S7* S4* S5
      SP(15) = A* S1* S4 *S5* (S11-S12+ S13-2)
      SP(16) = 2*A*S1* S8*S5
       SP(17)=A*S1*S3*S5*(S11+S12+S13-2)
      SP(18) =  2*A* S7* S3*S5
       SP(19)=A*S2*S3*S5*(-S11+S12+S13-2)
      SP(20) = 2*A* S2* S8* S5
C-----------------------------------------------------------------------
82    CONTINUE
      IF(NEJ .EQ. 1) RETURN
      S(1,1) = 0.125 * S4 * S6 *(2.0*S11+1.0+S12+S13)
      S(1,2) = 0.125 * S2 * S6*(2.0*S12+1.0+S11+S13)
      S(1,3)=0.125*S2*S4*(2.0*S13+1.0+S12+S11)
      S(2,1) = -0.5*S11*S4*S6
      S(2,2) = -0.25* S7*S6
      S(2,3) = -0.25*S7*S4
       S(3,1)=0.125*S4*S6*(2.0*S11-1.0-S12-S13)
      S(3,2) = 0.125*S1*S6*(2.0*S12+1.0-S11+S13)
      S(3,3) = 0.125*S1*S4*(2*S13 + 1.0- S11+S12)
      S(4,1) = 0.25*S6*S8
      S(4,2) = -0.5*S12*S1*S6
      S(4,3) = - 0.25*S1*S8
      S(5,2) = 0.125*S1*S6*(2*S12 -1.0+S11-S13)
      S(5,3)=0.125*S1*S3*(2.*S13+1.0-S11-S12)
      S(5,1) = 0.125*S3*S6*(2*S11-1.0+S12-S13)
      S(6,1) = -0.5*S3*S6*S11
      S(6,2) = +0.25*S7*S6
      S(6,3) = -0.25 * S7*S3
      S(7,1) = 0.125*S3*S6*(2.*S11+1.0-S12+S13)
       S(7,2)=0.125*S2*S6*(2.0*S12-1.0-S11-S13)
      S(7,3)=0.125*S2*S3*(2.*S13+1.0+S11-S12)
      S(8,1)  = - 0.25*S8*S6
      S(8,2) =-0.50*S12*S2*S6
      S(8,3)  = - 0.25* S2 * S8
      S(9,1)  = - 0.25*S4*S9
      S(9,2)  =  -0.25*S2*S9
      S(9,3) = -0.5*S13*S2*S4
      S(10,1) =  0.25*S4*S9
      S(10,2) =  -0.25*S1*S9
      S(10,3)=-0.5*S13*S1*S4
      S(11,1) =  0.25*S3*S9
      S(11,2) = +0.25*S1*S9
      S(11,3)=-0.5*S1*S3*S13
      S(12,1) = -0.25*S3*S9
      S(12,2) = +0.25*S2*S9
      S(12,3)=-0.5*S13*S2*S3
      S(13,1)=0.125*S4*S5*(2*S11+1.0+S12-S13)
      S(13,2)= 0.125*S2*S5*(2*S12+1.0-S13+S11)
      S(13,3)=0.125*S2*S4*(2.0*S13-1.0-S12-S11)
      S(14,1)= -0.5*S11*S4*S5
      S(14,2) = -0.25*S7*S5
      S(14,3)= 0.25*S7*S4
      S(15,1)=0.125*S4*S5*(2.0*S11-S12+S13-1.0)
      S(15,2)=0.125*S1*S5*(2.0*S12-S11-S13+1.0)
      S(15,3)=0.125*S1*S4*(2.0*S13+S11-S12-1.0)
      S(16,1) = 0.25*S8*S5
      S(16,2)=-0.5*S12*S1*S5
      S(16,3) = 0.25*S8*S1
       S(17,1)=0.125*S3*S5*(2.*S11+S13+S12-1.0)
      S(17,2) =0.125*S1*S5*(2.0*S12+S11 +S13-1.0)
      S(17,3) =0.125*S1*S3*(2.0*S13 +S11+S12-1.0)
      S(18,1)=-0.5*S3*S5*S11
      S(18,2)= +0.25*S7*S5
      S(18,3)= 0.25*S7*S3
      S(19,1)=0.125*S3*S5*(2.*S11-S12-S13+1.0)
      S(19,2)=0.125*S2*S5*(2.0*S12-S11+S13-1.0)
      S(19,3)=0.125*S2*S3*(2.0* S13-S11+S12-1.0)
      S(20,1)= - 0.25*S8*S5
      S(20,2)= -0.5*S12*S2*S5
      S(20,3)  = 0.25*S2*S8
      GO TO 38
36    CONTINUE
38    CONTINUE
       P1=0.0
       P2=0.0
       P3=0.0
       P4=0.0
       P5=0.0
       P6=0.0
       P7=0.0
       P8=0.0
       P9=0.0
      DO 44 J = 1,NNE1
      M1 = MCODE(I,J)
      P1 = P1 +  S(J,2)* Y(M1)
      P2 = P2 + S(J,3)*Z(M1)
      P3 = P3 + S(J,2)*Z(M1)
      P4 = P4 +S(J,3)*Y(M1)
      P5 = P5 + S(J,1)*Z(M1)
      P6 = P6 + S(J,1)*Y(M1)
      P7 = P7 + S(J,3)*X(M1)
      P8 = P8 + S(J,2)*X(M1)
      P9 = P9 + S(J,1)*X(M1)
44    CONTINUE
      SJ(1,1) = P1*P2-P3*P4
      SJ(1,2)= P3*P7 -P8* P2
      SJ(1,3) = P8*P4 -P1*P7
      SJ(2,1)= P4*P5- P2*P6
      SJ(2,2) =P2*P9 - P5*P7
      SJ(2,3)= P7*P6-P4*P9
      SJ(3,1)= P6*P3 - P5*P1
       SJ(3,2)=P5*P8-P9*P3
      SJ(3,3) = P9*P1 - P6*P8
C    DETERMINANT  OF  JACOBIAN
C
C     IF(J1.GT.1.AND.J2.GT.1.AND.J3.GT.1)GO TO 200
      DETJ=(P9*(P1*P2-P3*P4)+P8*(P4*P5-P2*P6)
     1  +P7*(P3*P6-P1*P5))
C     DETJ=ABS(DETJ)
C     IF(DETJ .LE. 0.0) WRITE(6,133) I,J1,J2,J3
C#####
133   FORMAT(5X, 44HDETERMINANT OF JACOBIAN IS  ZER(
C      WRITE(6,1111)DETJ
C#####
200   CONTINUE
1111   FORMAT(1X,E16.8)
C
C    JACOBIAN   INVERSION
C
      IF(NEJ .EQ. 2) RETURN
      DO 75 N1=1,3
      DO 75 N2 =1,3
75    C(N2,N1)=SJ(N1,N2)/DETJ
C
      DO 45 K=1,3
      DO 45 J=1,NNE1
      CC(K,J)=0.0
```

```
      DO 47  K=1,3
      DO 47  J=1,NNE1
      DO 46  N1=1,3
6     CC(K,J) = CC(K,J) + C(K,N1)*S(J,N1)
7     CONTINUE

              STRAIN-DISPLACEMENT MATRIX

      DO 54  N1=1,NNE1
      N2 = (N1-1)*NDF
      L1=N2+1
      L2=N2+2
      L3=N2+3
       H(1,L1)=CC(1,N1)
      H(4,L1+1)=CC(1,N1)
      H(6,L1+2)=CC(1,N1)
      H(2,L2)=CC(2,N1)
      H(4,L2-1)=CC(2,N1)
      H(5,L2+1)=CC(2,N1)
      H(3,L3)=CC(3,N1)
      H(5,L3-1)=CC(3,N1)
      H(6,L3-2)=CC(3,N1)
54    CONTINUE
      IF(NF .EQ. 4) RETURN
C
C     - - - - - - - - - - - MODIFY 'H" MATRIX FOR INCLINED BOUNDARY CONDIT
C
      DO 68 J=1,NNE1
      MC=(MCODE(I,J)-1)*NDF
      DO 62 K=1,NDF
      MC=MC+1
      IF(NZN(MC).LT.0)GO TO 64
62    CONTINUE
      GO TO 68
64    NJ=J
      N2=(NJ-1)*NDF
      L1=N2+1
        L2=N2+2
        L3=N2+3
      C1= CC(1,NJ)
      C2 =CC(2,NJ)
      C3=CC(3,NJ)
C
      H(1,L1)=CS*C1
       H(1,L2)=-SN*C1
       H(2,L1)=SN*C2
      H(2,L2)=CS*C2
      H(3,L3)=C3
       H(4,L1)=CS*C2 SN*C1
        H(4,L2)=CS*C1-SN*C2
      H(5,L1)=SN*C3
      H(5,L3)=C2
      H(6,L1)=CS*C3
       H(6,L2)=-SN*C3
      H(6,L3)=C1
68    CONTINUE
C
 118  CONTINUE
      RETURN
      END
CCCCCCCCCCCCCCCCCCCCCCCCC
      SUBROUTINE DECOMP
C...      THIS ROUTINE TRIANGULARIZE STIFNESS MATRIX STORED
C...      IN BANDED FORM
CCCCCCCCCCCCCCCCCCCCCCCCC
      IMPLICIT REAL*8(A-H,O-Z)
       COMMON/LID/ SK(366,165),SM(366,165),SKK(1,1)
      COMMON/BON/ NNODE, NEUB,NETB,NBLOK
      COMMON/AAA/ NEL,NNP,NEQ,NHBD,NBC,NTE1,NTE2,NTE3,NTE4,
     1 NNE1,NNE2,NNE3,NNE4,NDF,NRF,NRS,DETJ
      CALL TIMING(1)
C+++++
      MATER=0
      NEQN=0
      DO 25  IS=1, NEUB
      DO 24  IJ=2, NHBD
      IF( SK(IS,IJ) .EQ. 0.0) GO TO 24
      II=IS+IJ-1
      CZ = SK(IS,IJ)/SK(IS,1)
      J=0
      DO 23  NI=IJ,NHBD
      J=J+1
      SK(II,J)=SK(II,J)-CZ*SK(IS,NI)
23    CONTINUE
      SK(IS,IJ) = CZ
24    CONTINUE
25    CONTINUE
      IF( MATER .EQ. 0) GO TO 28
      DO 27  IJ = 1,NEUB
      NEQN=NEQN+1
      WRITE(6,300) NEQN, (SK(IJ,J), J=1,NHBD)
C#####
27    CONTINUE
28    CONTINUE
      WRITE(6,1000)
C#####
1000  FORMAT('TIME TO DECOMP =')
```

```
      CALL TIMING(2)
C+++++
      RETURN
300   FORMAT(1H ,I3, 10E12.4, (/, 1H ,3X, 10E12.4))
      END
C££££££££££££££££££££££
      SUBROUTINE LOAD(DYN)
C...     THIS ROUTINE IS MODIFIED BY THIRU TO INCLUDE DYNAMIC LOADING
C...     CONVERTS SURFACE PRESSURES TO EQUIVALENT NODAL FORCES
C...     READS IN NODAL FORCES DIRECTLY
CXXXXX
C...     CALCULATES LOADS DUE TO TEMPERATURE
C££££££££££££££££££££££
      IMPLICIT REAL*8(A-H,O-Z)
      INTEGER*4 MTL1,MTL2
      LOGICAL DYN
      COMMON/MEM/ SP(20),SJ(3,3)
      COMMON/CAP/ GE1(27),GE2(27),GE3(27),WE(4)
      COMMON/BBB/ D(6,6),D1(6,6),E(12,3),POIS(12,6),MCODE(12,20),
     1            EK(60,60) ,H(6,60),LRF(12),IDENT(12),RAW(1),EM(60,60)
      DIMENSION TF(60)
      COMMON/CCC/ X(128),Y(128),Z(128),NZN(366) ,NFIX(366) ,
     1 AST(12),EST(12),DIA(12),ELINE(6,6),ELINK(6,6)
      COMMON/AAA/ NEL,NNP,NEQ,NHBD,NBC,NTE1,NTE2,NTE3,NTE4,
     1 NNE1,NNE2,NNE3,NNE4,NDF,NRF,NRS,DETJ
      COMMON/SEP/  NDI(366),JRC(3), XJN(12)
      COMMON/GS/ NG1
      COMMON/TOR/ SV(4,3),TE(20),CET(6),CTE
      COMMON/REL/ U(366),P(366),PT(366),U1(366),U10(366),U2(366)
     1  ,U20(366),U0(366),P1(366),PS(366),PIU(366),PIT(366)
C------------------------------------------------------------------------
C------------------------------------------------------------------------
      CALL CTIM£A(MTL1)
C+++++
      DO 8 I=1, NEQ
8     P(I)=0.0
      JP=NNE1*NDF
      READ(5,*)NFACES
CXXXXX
5     FORMAT(I2)
      WRITE(6,100)NFACES
C#####
100   FORMAT(1X,'NFACES=',I5)
      IF( NFACES .EQ. 0)GO TO  37
      DO 35 IS=1, NFACES
      CALL GAUSS
C+++++
C - - - - - - - - - - - - - - - - - - - - - - - - - - - - - - - - - - -
C                       DISTRIBUTED  SURFACE  PRESSURE
C-------------------------NS=0<  C   CONSTANT PRESSURE OVER THE SURFACE--
C-------------------------NS=1<      VARIABLE PRESSURE OVER THE SURFACE--
C------------------------------------------------------------------------
10    FORMAT(20F0.0)
9     FORMAT(8F0.0)
      READ(5,*)I,NF,NS
CXXXXX
4     FORMAT(3I3)
      WRITE(6,102)I,NF,NS
C#####
102   FORMAT(1X,'I=',I5,'NF=',I5,'NS=',I5)
      IF(NS .EQ.0)GO TO 16
      IF(NNE1.EQ.20)GO TO 6
      READ(5,*)(TE(J),J=1,NNE1)
CXXXXX
      GO TO 17
6     READ(5,*)(TE(J),J=1,NNE1)
CXXXXX
      GO TO 17
16    READ(5,*)   PRESS
CXXXXX
15    FORMAT(F5.3)
      WRITE(6,101)PRESS
C#####
101   FORMAT(1X,E10.3)
17    CONTINUE
      DO 22 IJ= 1,JP
22    TF(IJ)=0.0
       NM=IABS(NF)
      DO 32 J1=1,NG1
      DO 32 J2=1,NG1
      IF(NF .EQ. 1 .OR. NF .EQ. -1)GO TO 21
      IF(NF .EQ. 2 .OR. NF .EQ. -2)GO TO 23
      IF(NF .EQ. 3 .OR. NF .EQ. -3)GO TO 24
21    CONTINUE
      IF(NF .EQ. 1) GE1(1)=1.0
      IF(NF .EQ.-1) GE1(1)=-1.0
      JL= 1
      JM= J1
      JN= J2
      GO TO 25
23    IF(NF .EQ. 2) GE2(1)=1.0
      IF(NF .EQ.-2)GE2(1)=-1.0
      JL=J1
      JM=  1
      JN= J2
      GO TO 25
24    IF(NF. EQ. 3 ) GE3(1)=1.0
      IF(NF .EQ. -3) GE3(1)=-1.0
      JL=J1
      JM= J2
      JN= 1
25    CONTINUE
      CALL ISOP2(I,JL, JM, JN, 2 ,NF)
C+++++
      DOS= WE(J1)*WE(J2)
      IF(NS .EQ. 0) GO TO 41
      PRESS=0.0
      DO 42 J=1,NNE1
42     PRESS=PRESS+SP(J)*TE(J)
41    CONTINUE
C------------------------------------------------------------------------
C                    CALCULATE DIRECTION COSINES OF THE SURFACE
      C1=DABS(SJ(NM,1))
      C2=DABS(SJ(NM,2))
      C3=DABS(SJ(NM,3))
C     WRITE(6,103)C1,C2,C3
C#####
103   FORMAT(1X,'C1=',E10.3,'C2=',E10.3,'C3=',E10.3)
      CAZ=DSQRT(C1*C1+C2*C2+C3*C3)
      C1=C1/CAZ
      C2=C2/CAZ
      C3=C3/CAZ
C
C     WRITE(6,101)PRESS
C#####
C     WRITE(6,103)C1,C2,C3
C#####
      XJN(1)=C1*PRESS
      XJN(2)=C2*PRESS
      XJN(3)=C3*PRESS
C     WRITE(6,104)(XJN(IA),IA=1,3)
C#####
104   FORMAT(3(1X,E10.3)/)
      DO 27 JS=1,NNE1
      IF(SP(JS) .EQ. 0.0) GO TO 27
      JJ= (JS-1)* NDF
      DO 26 JK=1, NDF
      JJ= JJ+1
26     TF(JJ)=TF(JJ)+SP(JS)*SJ(NM,JK)*XJN(JK)*DOS
C     WRITE(6,106) JJ,JS,NM,JK
C#####
106   FORMAT(1X,'JJ=',I3,'JS=',I3,'NM=',I3,'JK=',I3)
C     WRITE(6,107) TF(JJ),SP(JS),SJ(NM,JK),XJN(JK),DOS
C#####
107   FORMAT(1X,'TF=',E10.3,'SP=',E10.3,'SJ=',E10.3,'XJN=',E10.3,'DOS=',
     1E10.3)
27    CONTINUE
C     WRITE(6,105)(TF(JS),JS=1,NNE1)
C#####
105   FORMAT(10(1X,E10.3)/)
32    CONTINUE
      DO34 IK= 1,NNE1
      M1=(MCODE(I,IK) -1)*NDF
      JJ=(IK-1)*NDF
      DO34 MJ= 1,NDF
      M1=M1+1
      JJ= JJ+1
34    P(M1)= P(M1)+ TF(JJ)
35    CONTINUE
37    CONTINUE
```

```
      DO 35 IJ= IS, IM
      MS = J- IJ+ 1
      SK(IJ,MS) = 0.0
5     CONTINUE
0     CONTINUE
      IF(NBLOK .EQ. 1) RETURN
      IMIN=NEUB+1
      IMAX = NETB-1
      DO 50 J=IMIN,IMAX
      IF(NFIX(J) .EQ. 0) GO TO 50
      IS=J-NHBD+1
      DO 45 IJ = IS, NEUB
      MS= J-IJ+1
      SK(IJ,MS) = 0.0
5     CONTINUE
0     CONTINUE
      RETURN
      END
££££££££££££££££££££££
      SUBROUTINE RESOLV
££££££££££££££££££££££
      IMPLICIT REAL*8(A-H,O-Z)
      COMMON/CCC/ X(128),Y(128),Z(128),NZN(366) ,NFIX(366) ,
     1 AST(12),EST(12),DIA(12),ELINE(6,6),ELINK(6,6)
       COMMON/LID/ SK(366,165),SM(366,165),SKK(1,1)
      COMMON/REL/ U(366),P(366),PT(366),U1(366),U10(366),U2(366)
     1   ,U20(366),U0(366),P1(366),PS(366),PIU(366),PIT(366)
      COMMON/BON/ NNODE, NEUB,NETB,NBLOK
      COMMON/AAA/ NEL,NNP,NEQ,NHBD,NBC,NTE1,NTE2,NTE3,NTE4,
     1 NNE1,NNE2,NNE3,NNE4,NDF,NRF,NRS,DETJ
      MATER =0
      CALL TIMING(1)
+++++
       DO 310 IJ=1,NEQ
      DO 305 IS=2,NHBD
      IF(SK(IJ,IS).EQ.0.0) GO TO 305
      II=IJ+IS-1
      P(II)=P(II)-SK(IJ,IS)*P(IJ)
)5    CONTINUE
      P(IJ)=P(IJ)/SK(IJ,1)
.0    CONTINUE
      KEUB=NEUB
      DO 85 IS=1, NEUB
      JL=NEUB+1-IS
      DO 82 KL=2, NHBD
      IF(SK(JL,KL) .EQ. 0.0) GO TO 82
      JJ= JL+KL-1
      P(JL) = P(JL) - SK(JL,KL)* P(JJ)
      CONTINUE
      CONTINUE
      DO 99 J=1,NEQ
      U(J)=P(J)
 8    CONTINUE
      WRITE(6,1000)
####
00    FORMAT('TIME TAKEN TO RESOLV = ')
      CALL TIMING(2)
++++
      WRITE(6,2002)
####
02    FORMAT(1H1 , 5X,6H NODES, 8X, 10H X- DISPL., 8X,9H Y-DISPL. ,
     1 8X, 9H Z-DISPL.)
      DO 912 I=1,NNP
2     WRITE(6,412) I , U(3*I-2)    ,U(3*I-1) , U(3*I )
####
2     FORMAT(/,5X, I5, 6X, E16.8, 6X, E16.8, 6X, E16.8)
      RETURN
      END
      SUBROUTINE STRESS
££££££££££££££££££££££
      IMPLICIT REAL*8(A-H,O-Z)
      INTEGER*4 MTS1,MTS2
      DIMENSION TF(60),A(9),R(9)
      COMMON/TOR/ SV(4,3),TE(20),CET(6),CTE
      COMMON/REL/ U(366),P(366),PT(366),U1(366),U10(366),U2(366)
     1   ,U20(366),U0(366),P1(366),PS(366),PIU(366),PIT(366)
      COMMON/DLE/S(20,3),CC(3,20),C(3,3)
      COMMON/AAA/ NEL,NNP,NEQ,NHBD,NBC,NTE1,NTE2,NTE3,NTE4,
     1 NNE1,NNE2,NNE3,NNE4,NDF,NRF,NRS,DETJ
      COMMON/BBB/ D(6,6),D1(6,6),E(12,3),POIS(12,6),MCODE(12,20),
     1          EK(60,60) ,H(6,60),LRF(12),IDENT(12),RAW(1),EM(60,60)
      COMMON/CCC/ X(128),Y(128),Z(128),NZN(366) ,NFIX(366) ,
     1 AST(12),EST(12),DIA(12),ELINE(6,6),ELINK(6,6)
      COMMON/GSS/ ZETA(27), ETA(27), ZI(27), W(27), NGP
       COMMON/FFF/ SIGG1(110)
      COMMON/GS/NG1
      COMMON/CAP/ GE1(27),GE2(27),GE3(27),WE(4)
      COMMON/ABC/ PS1(27),PS2(27),PS3(27),SIG(27,6),EC(27,6)
     1,DC1(27,3), DC2(27,3), DC3(27,3)
      CALL CTIMEA(MTS1)
C+++++
      WRITE(6,316)
C#####
316   FORMAT(1H1,43HELEMENT STRAINS STRESSES PRINCIPAL STRESSES,
     1 21HAND DIRECTION COSINES////)
      CALL GAUSS
C+++++
      WRITE(6,465)
C#####
465   FORMAT(///,5X, 7HELEMENT,5X,9HGAUSS PT., 8X,6H SIGMX, 8X,7H SIGMY
     1, 8X,6H SIGMZ, 8X, 7H SIGMXY,8X,7H SIGMYZ,8X,7H SIGMZX)
      JP=NNE1*NDF
      DO 18 I = 1 , NEL
      LET = IDENT(I)
      GO TO (111,211,222,333),LET
111   CONTINUE
      CALL DMAT(I)
C+++++
      DO 24 IS = 1, NGP
      DO 24 IM = 1, 6
      SIG(IS,IM)=0.0
      EC(IS,IM)=0.0
24    CONTINUE
      DO 114 J=1,NNE1
      JK= (J-1)*NDF
       MJ=(MCODE(I,J)-1)*NDF
      DO 114 K=1,NDF
      MJ=MJ+1
      JK=JK+1
114   TF(JK)=U(MJ)
312   FORMAT(5X,I5)
      WRITE(6,312)I
C#####
      IF(NGP .EQ. 14 ) GO TO 42
      M=0
      DO 115 J1=1,NG1
      DO 115 J2=1,NG1
      DO 115 J3=1,NG1
      M=M+1
       CALL ISOP2(I,J1,J2,J3,3,4 )
C+++++
C
C                         STRAINS IN CONCRETE
      DO 116 K=1,6
      DO 116 J=1,JP
116   EC(M,K)=EC(M,K)+H(K,J)*TF(J)
C
      DO 118 J=1,3
118   EC(M,J)=EC(M,J)-SV(I,J)
C
C
C                         CORRESPONDING STRESSES
C
      DO 122 J=1,6
      DO 122 K=1,6
122   SIG(M,J)=SIG(M,J)+D1(J,K)*EC(M,K)
115   CONTINUE
      GO TO 125
42    CONTINUE
      DO130 M=1,NGP
       CALL ISOP2(I,M,M,M,3,1)
C+++++
      DO 131 K=1,6
      DO 131 J=1,JP
131   EC(M,K)=EC(M,K)+H(K,J)*TF(J)
      DO 132 J=1,3
132   EC(M,J)=EC(M,J)-SV(I,J)
      DO 134 J=1,6
      DO 134 K=1,6
134   SIG(M,J)=SIG(M,J)+D1(J,K)*EC(M,K)
130   CONTINUE
```

```
125   CONTINUE
      DO 321 IS=1,NGP
321   WRITE(6,313) IS,( EC(IS,J),J=1,6)
C#####
      DO 322  IS=1,NGP
322   WRITE(6,314) IS,( SIG(IS,J),J=1,6)
C#####
313   FORMAT(12X,I5,9X,F10.8,4X,F10.8,4X,F10.8,4X,F10.8,4X,F10.8,4X,
     1 F10.8)
314   FORMAT(12X,I5,9X,F10.4,4X,F10.4,4X,F10.4,4X,F10.4,4X,F10.4,4X,
     1 F10.4)
      WRITE(6,323)
C#####
323   FORMAT(///)
      WRITE(6,324)
C#####
324   FORMAT(//,12X, 3HPT., 9X,31HPRINCL. STRESS AND DIRE.COSINES)
      DO 20  M=1,NGP
      G1 = SIG(M,1)
      G2 = SIG(M,2)
      G3 = SIG(M,3)
      G4 = SIG(M,4)
      G5 = SIG(M,5)
      G6 = SIG(M,6)
      ZNV1 = G1 + G2 + G3
      ZNV2 = G1 *G2 + G2*G3 + G3*G1 - G4*G4 - G5*G5- G6*G6
      ZNV3 = G1*G2*G3 + 2.0*G4*G5*G6 - G1*G5*G5
     1     - G2*G6*G6 - G3*G4*G4
      PS1(M) = 0.0
      PS2(M) = 0.0
      PS3(M) = 0.0
      BB = -ZNV1
      CW = ZNV2
      DD = - ZNV3
C...     FIND ALL ROOTS OF CUBIC EQUATION AA*X*3 + BB*X*2 + CC*X + DD
C...     FIRST ROOT (X5) IS FOUND BY NEWTON'S METHOD USING 0 AS FIRST
C...     APPROX. THEN SOLVE QUADRATIC BY STANDARD FORMULA. ERR IS THE
C...     ACCURACY REQUIRED FOR ROOT X5
      ERR = 1E-6
      X1 = 0.0
      CORR = 2.0*ERR
1000  B1 = BB + X1
      B2 = CW + X1*B1
      IF(DABS(CORR).LT.ERR) GO TO 2000
      B3 = DD+ X1*B2
      C3 = (X1+B1)*X1 + B2
      IF(DABS(C3) .LT . 1E-30) C3 = 1.0
      CORR = B3/C3
      X1 = X1 - CORR
      GO TO 1000
2000  X5 = X1
C...
C...     SECOND PART TO FIND ROOTS OF QUADRATIC
C...     X**2 + B1*X1 + B2 = 0.0
C...
      DIP = B1*B1 - 4.0*B2
      IF(DIP .LT . 0.0) GO TO 3000
      SD = DSQRT(DIP)
      X6 = (SD - B1) * 0.5
      X7 = -(SD + B1) * 0.5
      GO TO 336
3000  X6 = -0.5* B1
      X7 = 0.5*DSQRT(-DIP)
      WRITE(6,800) I,M
C#####
800   FORMAT(/,15X,'CONJUGATE',2I5)
336   CONTINUE
      IF(X5 .GE. X6 .AND. X6 .GE. X7) GO TO 430
      IF(X5 .GE. X7 .AND. X7 .GE. X6) GO TO 431
      IF(X6 .GE. X6 .AND. X5 .GE. X7) GO TO 432
      IF(X6 .GE. X7 .AND. X7 .GE. X5) GO TO 433
      IF(X7 .GE. X5 .AND. X5 .GE. X6) GO TO 434
      IF(X7 .GE. X6 .AND. X6 .GE. X5) GO TO 435
 30   PS1(M) = X5
      PS2(M) = X6
      PS3(M) = X7
      GO TO 438
 31   PS1(M) = X5
      PS2(M) = X7
      PS3(M) = X6
      GO TO 438
432   PS1(M) = X6
      PS2(M) = X5
      PS3(M) = X7
      GO TO 438
433   PS1(M) = X6
      PS2(M) = X7
      PS3(M) = X5
      GO TO 438
434   PS1(M) = X7
      PS2(M) = X5
      PS3(M) = X6
      GO TO 438
435   PS1(M) = X7
      PS2(M) = X6
      PS3(M) = X5
438   CONTINUE
17    CONTINUE
C...
C...     PRINCIPAL DIRECTIONS
C...     DC1,DC2,DC3 ARE THE DIRECTION COSINES OF
C...     PRINCIPAL STRESSES PS1,PS2,PS3
C...
      DO 440 IS = 1,3
      GO TO (443,445,447),IS
443   AS1 = G1 - PS1(M)
      AS2 = G2 -PS1(M)
      AS3 = G3 - PS1(M)
      GO TO 444
445   AS1 = G1 - PS2(M)
      AS2 = G2 - PS2(M)
      AS3 = G3 - PS2(M)
      GO TO 444
447   AS1 = G1 - PS3(M)
      AS2 = G2 - PS3(M)
      AS3 = G3 - PS3(M)
444   CONTINUE
      AK = G4
      BK = G5
      CK = G6
      YAP1 = AS2*CK -BK*AK
      YAP2 = AK*AK - AS1*AS2
      IF(YAP1 .EQ . 0.0) YAP1 = 1.0
      IF(YAP2 . EQ .0.0) YAP2 = 1.0
      BJM1 = (BK*BK - AS2*AS3)/YAP1
      BJM2 = (AS1*BK - AK*CK) / YAP2
      BJ1 = BJM1*BJM1
      BJ2 = BJM2*BJM2
      ZIP = DSQRT(BJ1 + BJ2 + 1.0)
      DC3(M,IS) = 1.0/ZIP
      DC2(M,IS) = BJM2*DC3(M,IS)
      DC1(M,IS) = BJM1*DC3(M,IS)
440   CONTINUE
20    CONTINUE
      DO 325 J = 1,NGP
      WRITE(6,317)J,PS1(J),PS2(J),PS3(J),(DC1(J,IJ),DC2(J,IJ),DC3(J,IJ)
C#####
     1    ,IJ = 1,3)
325   CONTINUE
317   FORMAT(2X,I3,3F10.4,2X,9(F7.5,1X))
      GO TO 19
211   CONTINUE
      GO TO 19
222   CONTINUE
C
C     THERMAL STRESS  IN  STEEL
C
      N =  LRF(I)
      MN1 = MCODE(I,1)
      MN2 = MCODE(I,2)
      EL    =DSQRT (( X(MN2)- X(MN1))**2 +(Y(MN2) - Y(MN1))**2 +
     1         ( Z(MN2) - Z(MN1))**2)
      AST(N) =(3.14  * DIA(N)**2)/4
      AL    =  (X(MN2) - X(MN1))/EL
      AM    =  (Y(MN2) - Y(MN1))/EL
      AN    =  (Z(MN2) - Z(MN1))/ EL
      MN1= (MN1-1)*NDF+1
      MN2= (MN2-1)*NDF+1
      CR1 = AL * U(MN1) + AM*U(MN1+1)+AN*U(MN1+2)
      CR2=AL*U(MN2)+AM*U(MN2+1)+AN*U(MN2+2)
```

```
      SIGG1(I) = EST(N)*(CR2 - CR1) / EL
      GO TO 19
333   CONTINUE
C
C   CALL SUBR. BOND TO CALCULATR THE BOND STRESSES
C+++++
C
19    CONTINUE
18    CONTINUE
22    CONTINUE
      WRITE(6,311)
C#####
311   FORMAT(1H1,5X,13HSTEEL ELEMENT,10X,8HSTRESSES)
      LEN1=NTE1+NTE2+1
      LEN2=NTE1+NTE2+NTE3
      DO  491 JS=LEN1,LEN2
      WRITE(6,309)JS,SIGG1(JS)
C#####
491   CONTINUE
309   FORMAT(7X,I5,10X,F12.6)
      CALL CTIMEA(MTS2)
C+++++
      WRITE(6,1001) MTS2 ,MTS1 ,RTS
C#####
1001  FORMAT('CPUTIME AT EXIT FROM STRESS ROUTINE =',I10/
     1    'CPU TIME AT ENTRY TO STRESS ROUTINE =',I10/
     2    'CPU TIME SPENT IN STRESS ROUTINE       =',F10.2/)
      RETURN
      END
CLLLLLLLLLLLLLLLLLLLL
CLLLLLLLLLLLLLLLLLLLL
      SUBROUTINE ASSEMM
C...      THIS ROUTINE IS CODED BY **THIRU** (29/10/80)
C...      ROUTINE TO ASSEMBLE CONSISTENT MASS MATRIX IN
C...      BANDED FORM.
      IMPLICIT REAL*8(A-H,O-Z)
CLLLLLLLLLLLLLLLLLLLL
      COMMON/AAA/ NEL,NNP,NEQ,NHBD,NBC,NTE1,NTE2,NTE3,NTE4,
     1 NNE1,NNE2,NNE3,NNE4,NDF,NRF,NRS,DETJ
      COMMON/SEP/ NDI(366), JRC(3),XJN(12)
      COMMON/BBB/ D(6,6),D1(6,6),E(12,3),POIS(12,6),MCODE(12,20),
     1              EK(60,60) ,H(6,60),LRF(12),IDENT(12),RAW(1),EM(60,60)
       COMMON/LID/ SK(366,165),SM(366,165),SKK(1,1)
      COMMON/BON/ NNODE, NEUB,NETB,NBLOK
      CALL TIMING(1)
C+++++
      DO 1 J=1,NEQ
      DO 1 IJ=1,NHBD
      SM(J,IJ)=0.0
1     CONTINUE
      DO 2 I=1,NEL
      CALL MASS(I)
C+++++
      DO 3  IM=1,NNE1
      IND=(IM-1)*NDF
      JND=MCODE(I,IM)
      KND=(JND-1)*NDF
      DO 4 IS=1,NDF
      KND=KND+1
      NDI(IND+IS)=KND
4     CONTINUE
3     CONTINUE
      JP=NNE1*NDF
      DO 5 II=1,JP
      NR=NDI(II)
      DO 6 JJ=1,JP
      NCL=NDI(JJ)
      IF(NCL.LT.NR)GO TO 6
      NCL=NCL-NR+1
      SM(NR,NCL)=SM(NR,NCL)+EM(II,JJ)
6     CONTINUE
5     CONTINUE
2     CONTINUE
      WRITE(5,1000)
C#####
      CALL TIMING(2)
C+++++
1000  FORMAT('TIME TO ASSEMBLE CONSISTENT MATRIX = ')
C     DO 7 J=1,NEUB
C     NEQN=NEQN+1
C     WRITE(6,100)NEQN,(SM(J,IJ),IJ=1,NHBD)
C#####
C100   FORMAT(2X,I3,10E12.4,(/,4X,10E12.4))
C7     CONTINUE
      RETURN
      END
      SUBROUTINE MASS(I)
      IMPLICIT REAL*8(A-H,O-Z)
CLLLLLLLLLLLLLLLLLLLL
      COMMON/GS/ NG1
      COMMON/MEM/ SP(20),SJ(3,3)
      COMMON/CAP/ GE1(27),GE2(27),GE3(27),WE(4)
       COMMON/DLE/S(20,3),CC(3,20),C(3,3)
      COMMON/AAA/ NEL,NNP,NEQ,NHBD,NBC,NTE1,NTE2,NTE3,NTE4,
     1 NNE1,NNE2,NNE3,NNE4,NDF,NRF,NRS,DETJ
      COMMON/SEP/ NDI(366), JRC(3),XJN(12)
      COMMON/BBB/ D(6,6),D1(6,6),E(12,3),POIS(12,6),MCODE(12,20),
     1              EK(60,60) ,H(6,60),LRF(12),IDENT(12),RAW(1),EM(60,60)
       COMMON/LID/ SK(366,165),SM(366,165),SKK(1,1)
      COMMON/BON/ NNODE, NEUB,NETB,NBLOK
      WRITE(6,6)
C#####
6     FORMAT('MASS')
      JP=NDF*NNE1
      N=LRF(I)
      DO 1 IS=1,60
      DO 1 JS=1,60
1     EM(IS,JS)=0.0
      DO 2 J1=1,NG1
      DO 2 J2=1,NG1
      DO 2 J3=1,NG1
      CALL ISOP2(I,J1,J2,J3,2,4)
C+++++
      DOS=WE(J1)*WE(J2)*WE(J3)*DETJ
      DO 3 II=1,NNE1
      DO 3 JJ=1,NNE1
      IF(II.GT.JJ) GO TO 10
      EIMJ=0.0
      EIMJ=EIMJ+RAW(N)*SP(II)*SP(JJ)*DOS
      I3=3*(II-1)
      J3=3*(JJ-1)
      DO 4 III=1,3
      EM(I3+III,J3+III)=EM(I3+III,J3+III)+EIMJ
10    CONTINUE
4     CONTINUE
3     CONTINUE
2     CONTINUE
      DO 5 II=1,JP
      DO 5 JJ=1,JP
5     EM(JJ,II)=EM(II,JJ)
      RETURN
      END
      SUBROUTINE EIG(A,R,N,MV)
      IMPLICIT REAL*8(A-H,O-Z)
CLLLLLLLLLLLLLLLLLLLL
      DIMENSION A(1),R(1)
C        GENERATE IDENTITY MATRIX
      IF(MV-1) 10,25,10
10    IQ=-N
      DO 20 J=1,N
      IQ=IQ+N
      DO 20 I9=1,N
      IJ=IQ+I9
      R(IJ)=0.0
      IF(I9-J) 20,15,20
15    R(IJ)=1.0
20    CONTINUE
C        COMPUTE INITIAL AND FINAL NORM(ANORM AND ANORMX)
25    ANORM=0.0
      DO 35 I9=1,N
      DO 35 J=1,N
      IF(I9-J) 30,35,30
30    IA=I9+(J*J-J)/2
      ANORM=ANORM+A(IA)*A(IA)
35    CONTINUE
      IF(ANORM)165,165,40
40    ANORM=1.414*DSQRT(ANORM)
      ANRMX=ANORM*1.0E-6/FLOAT(N)
C        INITIALIZE INDICATORS AND COMPUTE THRESHOLD THR
      IND=0
```

```
      THR=ANORM
45    THR=THR/FLOAT(N)
50    L=1
55    M=L+1
C         COMPUTE SIN AND COS
60    MQ=(M*M-M)/2
      LQ=(L*L-L)/2
      LM=L+MQ
62    IF(DABS(A(LM))-THR)130,65,65
65    IND=1
      LL=L+LQ
      MM=M+MQ
      X=0.5*(A(LL))-A(MM)
68    Y=-A(LM)/DSQRT(A(LM)*A(LM)+X*X)
      IF(X) 70,75,75
70    Y=-Y
75    SINX=Y/DSQRT(2.0*(1.0+(DSQRT(1.0-Y*Y))))
      SINX2=SINX*SINX
78    COSX=DSQRT((1.0-SINX2))
      COSX2=COSX*COSX
      SINCS=SINX*COSX
      ILQ=N*(L-1)
      IMQ=N*(M-1)
      DO 125 I9=1,N
      IQ=(I9*I9-I9)/2
      IF(I9-L) 80,115,80
80    IF(I9-M) 85,115,90
85    IM=I9+MQ
      GO TO 95
90    IM=M+IQ
95    IF(I9-L)100,105,105
100   IL=I9+LQ
      GO TO 110
105   IL=L+LQ
110   X=A(IL)*COSX-A(IM)*SINX
      A(IM)=A(IL)*SINX+A(IM)*COSX
      A(IL)=X
115   IF(MV-1)120,125,120
120   ILR=ILQ+I9
      IMR=IMQ+I9
      X=R(ILR)*COSX-R(IMR)*SINX
      R(IMR)=R(ILR)*SINX+R(IMR)*COSX
      R(ILR)=X
125   CONTINUE
      X=2.0*A(LM)*SINCS
      Y=A(LL)*COSX2+A(MM)*SINX2-X
      X=A(LL)*SINX2+A(MM)*COSX2+X
      A(LM)=(A(LL)-A(MM))*SINCS+A(LM)*(COSX2-SINX2)
      A(LL)=Y
      A(MM)=X
C         TESTS FOR COMPLETION
C         TEST FOR M=LAST COLUMN
130   IF(M-N) 135,140,135
135   M=M+1
      GO TO 60
140   IF(L-(N-1))145,150,145
145   L=L+1
      GO TO 55
150   IF(IND-1)160,155,160
155   IND=0
      GO TO 50
180   R(IMR)=X
185   CONTINUE
      RETURN
      END
C£££££££££££££££££££
      SUBROUTINE PFORM(DT,TAW)
C£££££££££££££££££££
      IMPLICIT REAL*8(A-H,O-Z)
      COMMON/REL/ U(366),P(366),PT(366),U1(366),U10(366),U2(366)
     1   ,U20(366),U0(366),P1(366),PS(366),PIU(366),PIT(366)
       COMMON/LID/ SK(366,165),SM(366,165),SKK(1,1)
      COMMON/AAA/ NEL,NNP,NEQ,NHBD,NBC,NTE1,NTE2,NTE3,NTE4,
     1 NNE1,NNE2,NNE3,NNE4,NDF,NRF,NRS,DETJ
      COMMON/CCC/ X(128),Y(128),Z(128),NZN(366) ,NFIX(366) ,
     1 AST(12),EST(12),DIA(12),ELINE(6,6),ELINK(6,6)
      CALL TIMING(1)
C+++++
      TAW1=6.0/TAW
      TAW2=TAW1/TAW
      K2=NEQ-NHBD
      DO 1 I1 = 1,NEQ
      P1(I1)=0.0
      IF(NZN(I1).EQ.1) GO TO 1
      K1=I1+NHBD-1
      IF(I1.GT.K2)K1=NEQ
      DO 2 I2 =I1,K1
      I4=I2-I1+1
      SMI=TAW2*U0(I2)
      SMI=SMI+TAW1*U10(I2)
      SMI=SMI+2.0*U20(I2)
      SMI=SMI*SM(I1,I4)
      P1(I1)=P1(I1)+SMI
2     CONTINUE
1     CONTINUE
      DO 3 I3=1,NEQ
      P(I3)=PS(I3)+PIT(I3)+P1(I3)
3     CONTINUE
      WRITE(6,1000)
C#####
1000  FORMAT(1X,'PFORM')
      WRITE(6,1001)
C#####
1001  FORMAT('TIME TO FORM LOAD VECTOR = ')
      CALL TIMING(2)
C+++++
      CALL WRITE1(PIT,NEQ,4HPT   ,2)
C+++++
      CALL WRITE1(PS,NEQ,4HP    ,2)
C+++++
      CALL WRITE1(P1,NEQ,4HP1   ,2)
C+++++
      CALL WRITE1(U0,NEQ,4HU0   ,2)
C+++++
      CALL WRITE1(U10,NEQ,4HU10 ,2)
C+++++
      CALL WRITE1(U20,NEQ,4HU20 ,2)
C+++++
      RETURN
      END
C£££££££££££££££££££
      SUBROUTINE EFSTIF(DT,TAW,THET)
C...       THIS ROUTINE IS CODED BY THIRU 29/10/80 TO FORM
C...       THE EFFECTIVE STIFNESS BY ADDING A SCALAR MULTIPLE OF
C...       CONSISTENT MASS MATRIX TO THE  GLOBAL STIFNESS MATRIX
      IMPLICIT REAL*8(A-H,O-Z)
       COMMON/LID/ SK(366,165),SM(366,165),SKK(1,1)
      COMMON/AAA/ NEL,NNP,NEQ,NHBD,NBC,NTE1,NTE2,NTE3,NTE4,
     1 NNE1,NNE2,NNE3,NNE4,NDF,NRF,NRS,DETJ
      CALL TIMING(1)
C+++++
      TAW=THET*DT
      TAW2=6.0/TAW**2
      WRITE(6,1000)DT,TAW,THET,TAW2
C#####
1000  FORMAT(1X,'DT= ',F5.2,'TAW =',F5.2,'THET =',F5.2,'TAW2=',F5.2)
      DO 1 I1=1,NEQ
      DO 1 I2 =1,NHBD
      SK(I1,I2)=TAW2*SM(I1,I2)+SK(I1,I2)
1     CONTINUE
      WRITE(6,1001)
```

```
#####
)01   FORMAT('TIME TO ASSEMBLE EFFECTIVE STIFNESS = ')
      CALL TIMING(2)
+++++
      CALL BCOND
+++++
      CALL WRITE2(SK,NEQ,NHBD,4HSK   ,1)
+++++
      CALL WRITE2(SM,NEQ,NHBD,4HSM   ,1)
+++++
      RETURN
      END
££££££££££££££££££
      SUBROUTINE ACVEDI(TAW,THET)
...        THIS ROUTINE IS CODED BY THIRU 29/10/80
...        THIS ROUTINE IS CALLED IN TO CALCULATE THE DISPLACEMENT ,
++++
...        VELOCITY AND ACCELERATION FOR EACH TIME STEP
...        TAW         =THET*DT
...        THET        >1.37 (B.KEBORA)
      IMPLICIT REAL*8(A-H,O-Z)
      COMMON/REL/ U(366),P(366),PT(366),U1(366),U10(366),U2(366)
    1  ,U20(366),U0(366),P1(366),PS(366),PIU(366),PIT(366)
       COMMON/LID/ SK(366,165),SM(366,165),SKK(1,1)
      COMMON/AAA/ NEL,NNP,NEQ,NHBD,NBC,NTE1,NTE2,NTE3,NTE4,
    1 NNE1,NNE2,NNE3,NNE4,NDF,NRF,NRS,DETJ
..         U...ON ENTRY DISP AT T...ON EXIT DISP AT T+DT
..         U1 VELOCITY AT T+DT
..         U10 VELOCITY AT T
..         U2... ACCN AT T+DT
..         U20 ACCN AT T
      CALL TIMING(1)
++++
      TAW1=6.0/(TAW*THET)
      TAW2=TAW1/TAW
      DT1=TAW1/TAW
      DT2=0.5*DT1
      DT3=DT1**2/6.0
      TAW3=1.0-3.0/THET
      DO 1 I1 =1,NEQ
      U2(I1)=TAW2*(U(I1)-U0(I1))
    2     -TAW1*U10(I1)
    2     +TAW3*U20(I1)
      U1(I1)=U10(I1)+DT2*(U20(I1)+U2(I1))
      U(I1)=U(I1)+DT1*U10(I1)
    1     +DT3*(2.0*U20(I1)+U2(I1))
      CONTINUE
      CALL WRITE1(U,NEQ,4HU    ,1)
++++
      CALL WRITE1(U1,NEQ,4HU1   ,1)
++++
      CALL WRITE1(U2,NEQ,4HU2   ,1)
++++
      DO 2 I1=1,NEQ
      U0(I1)=U(I1)
      U10(I1)=U1(I1)
      U20(I1)=U2(I1)
      CONTINUE
      WRITE(6,1000)
####
)0    FORMAT('TIME SPENT IN ACVEDI = ')
      CALL TIMING(2)
++++
      RETURN
      END
££££££££££££££££££
      SUBROUTINE WRITE1(A,N,NAME,MOD)
      IMPLICIT REAL*8(A-H,O-Z)
      DIMENSION A(N)
      IF(MOD.EQ.1) RETURN
      WRITE(6,1001) NAME,N
####
)1    FORMAT(1X,A4,' MATRIX ',I4)
      WRITE(6,1000) (A(J),J=1,N)
####
)0    FORMAT(5X,6F15.4)
      RETURN
      END
££££££££££££££££££
      IMPLICIT REAL*8(A-H,O-Z)
      DIMENSION A2(M,N)
      IF(MOD.EQ.1) RETURN
      WRITE(6,1001) NAME,M,N
C#####
1001  FORMAT(1X,A4, ' MATRIX ',I3,1X,I3)
      K=0
      DO 1 J=1,M
      K=K+1
      WRITE(6,1000) K,(A2(J,IJ),IJ=1,N)
C#####
1000  FORMAT(2X,I3,10E12.4,(/,1X,10E12.4))
1     CONTINUE
      RETURN
      END
C£££££££££££££££££££
      LOGICAL FUNCTION PCOMP(A,B)
C£££££££££££££££££££
      IMPLICIT REAL*8(A-H,O-Z)
      PCOMP=.FALSE.
      IF(A.EQ.B) PCOMP=.TRUE.
      RETURN
      END
C£££££££££££££££££££
      SUBROUTINE MACRO
      IMPLICIT REAL*8(A-H,O-Z)
      LOGICAL DYN
      COMMON/LID/ SK(366,165),SM(366,165),SKK(1,1)
      COMMON/BBB/ D(6,6),D1(6,6),E(12,3),POIS(12,6)
    1           EK(60,60) ,H(6,60),LRF(12),IDENT(12
      COMMON/CCC/ X(128),Y(128),Z(128),NZN(366) ,NF
    1 AST(12),EST(12),DIA(12),ELINE(6,6),ELINK(6,6
      COMMON/REL/ U(366),P(366),PT(366),U1(366),U10
    1  ,U20(366),U0(366),P1(366),PS(366),PIU(366),I
      COMMON/SEP/ NDI(366), JRC(3),XJN(12)
      COMMON/BON/ NNODE, NEUB,NETB,NBLOK
      COMMON/AAA/ NEL,NNP,NEQ,NHBD,NBC,NTE1,NTE2,NTI
    1 NNE1,NNE2,NNE3,NNE4,NDF,NRF,NRS,DETJ
      LOGICAL PCOMP,AFL,AFR,BFL,BFR,CFL,CFR,DFL,DFR,
      DIMENSION WD(21),CT(4,32),LVE(9),LVS(9)
      DATA WD/4HTOL  ,4HDT   ,4HSTRE,4HPAVD,4HTANG,4HI
    1        4HNEXT,4HPROP,4HDATA,4HTIME,4HCONV,4HI
    2        4HCMAS,4HMESH,4HEIGE,4HEXCD,4HACCN,4H
      DATA NWD/21/,ENDM/4HEND /
C...       SET INITIAL VALUES OF THE PARAMETERS
      DT=0.0
      PROP=1.0
      RNMAX=0.0
      TOL=1.E-9
      THET=1.4
      UN=0.0
      TIME = 0.0
      K1 = 0
      NPLD = 0
      AFL=.TRUE.
      AFR=.FALSE.
      BFL=.TRUE.
      BFR=.FALSE.
      CFL=.TRUE.
      CFR=.FALSE.
      DFL=.FALSE.
```

```
      NE=NEND
      JP=NDF*NNE1
      DO 30  I=1,NEQ
      U0(I)=0.0
      U10(I)=0.0
      U20(I)=0.0
30    CONTINUE
C...     READ MACRO CARDS
C%%%%%
      LL=1
      LMAX=16
      CT(1,1)=WD(7)
      CT(3,1)=1.0
100   LL=LL+1
C     WRITE(6,4005)
C#####
4005  FORMAT(1X,'100+')
      IF(LL.LT.LMAX) GO TO 110
      LMAX=LMAX+16
110   READ(5,1000) (CT(J,LL),J=1,4)
C%%%%%
1000  FORMAT(A4,1X,A4,1X,2F5.0)
      WRITE(6,2000) (CT(J,LL),J=1,4)
C#####
2000  FORMAT(10X,A4,1X,A4,1X,2G15.5)
      IF(.NOT.PCOMP(CT(1,LL),ENDM)) GO TO 100
200   CT(1,LL)=WD(8)
C...     SET LOOP MARKERS
      LX=LL-1
      DO 230 L=1,LX
      IF(.NOT.PCOMP(CT(1,L),WD(7))) GO TO 230
      J=1
      K=L+1
      DO 210 I2=K,LL
      IF(PCOMP(CT(1,I2),WD(7))) J=J+1
      IF(J.GT.9) GO TO 401
      IF(PCOMP(CT(1,I2),WD(8))) J=J-1
210   IF(J.EQ.0) GO TO 220
      GO TO 400
220   CT(4,I2)=L
      CT(4,L)=I2
230   CONTINUE
      J=0
      DO 240 L=1,LL
      IF(PCOMP(CT(1,L),WD(7))) J=J+1
240   IF(PCOMP(CT(1,L),WD(8))) J=J-1
      IF(J.NE.0) GO TO 400
C...     EXECUTE MACRO INSTRUCTION PROGRAM
      LV=0
      L=1
299   DO 300 J=1,NWD
300   IF(PCOMP(CT(1,L),WD(J))) GO TO 310
      GO TO  330
310   I2=L-1
      IF(L.NE.1.AND.L.NE.LL)
     1WRITE(6,2010) I2, (CT(K,L),K=1,4)
C#####
2010  FORMAT(2X,'MACRO INSTRUCTION',I4,2X,'EXECUTED',2X,
     12(A4,2X),'V1 =',G13.4,'V2 =',G13.4)
      GO TO (1,2,3,4,5,6,7,8,9,10,11,12,13,14,15,16,17,18,19,20,21),J
C...     SET SOLUTION TOLERENCE
1     TOL=CT(3,L)
      GO TO 330
C...     SET TIME INCREMENT
2     DT=CT(3,L)
      GO TO 330
C...     PRINT STRESS VALUES
3     CONTINUE
      CALL STRESS
C+++++
      GO TO  330
4     LX = LVE(LV)
      IF(DMOD(CT(3,LX),DMAX1(CT(3,L),1.)).EQ.0.0) CALL PAVD
      GO TO 330
C...     FORM TANGENT STIFFNESS
5     IF(J.EQ.5) CFR=.FALSE.
      CALL ASSEMB
C+++++
      AFR=.TRUE.
      GO TO  330
C...     FORM OUT OF BALANCE FORCE FOR TIME STEP
6     IF(NPLD.GT.0)CALL PROPL(TIME,0,PROP,DT,INT1,INT,TL)
C+++++
      CALL PLOAD(PROP)
C+++++
      CALL PFORM(DT,TAW)
C+++++
      GO TO  330
C...     SET LOOP START INDICATORS
7     LV=LV+1
      LX=CT(4,L)
      LVS(LV)=L
      LVE(LV)=LX
      CT(3,LX)=1.0
      GO TO 330
C...     SET LOOP TERMINATOR CONTROLS
8     N=CT(4,L)
```

```
      CT(3,L)=CT(3,L)+1.0
      IF(CT(3,L).GT.CT(3,N)) LV=LV-1
      IF(CT(3,L).LE.CT(3,N)) L=N
      GO TO  330
9     NPLD = CT(3,L)
      CALL PROPL(0.,NPLD,PROP,DT,INT1,INT,TL)
C+++++
      CT(3,L+1) = INT1
      GO TO 330
10    GO TO 330
11    K1 = K1 + 1
      IF(K1.GT.INT) GO TO 101
      TIME = TIME + DT
      GO TO 330
101   TIME = TIME + TL
      GO TO 330
12    GO TO 330
13    CALL DECOMP
C+++++
      GO TO 330
14    CALL RESOLV
C+++++
      GO TO 330
15    CALL ASSEMM
C+++++
      GO TO  330
16    GO TO  330
17    GO TO 330
18    CALL EFSTIF(DT,TAW,THET)
C+++++
      GO TO 330
19    CALL ACVEDI(TAW,THET)
C+++++
      GO TO 330
20    CONTINUE
      CALL STDISP
      GO TO 330
21    DYN = .TRUE.
      CALL LOAD(DYN)
C+++++
      GO TO 330
330   L=L+1
      IF(L.GT.LL) RETURN
      GO TO 299
400   WRITE(6,4000)
C#####
      RETURN
4000  FORMAT(5X,'FATAL ERROR 10 UNBALANCED LOOP NEXT MACROS')
401   WRITE(6,4001)
C#####
      RETURN
4001  FORMAT(5X,'FATAL ERROR 11 LOOP NESTED DEEPER THAN 8')
402   WRITE(6,4002)
C#####
      RETURN
4002  FORMAT(5X,'FATAL ERROR 12 MACRO LABEL MISMATCH ON A READ COMMAND')
CXXXXX
403   WRITE(6,4003)
C#####
      RETURN
4003  FORMAT(5X,'FATAL ERROR 13 MACRO EXCD MUST BE PRECEEDED BY LMAS AND
     1FORM')
      RETURN
404   WRITE(6,4004)
C#####
4004  FORMAT(5X,'FATAL ERROR 14 ATTEMPT TO CHANGE BOUNDARY RESTRAINT')
      RETURN
      END
C££££££££££££££££
C£££££££££££££££££££££
      SUBROUTINE BAND
C...     THIS ROUTINE CALCULATES BANDWITH(SEMI).
C...     BANDWIDTH WILL DETERMINE THE SIZE OF THE 'SK'
C...     AND 'SM' MATRICES
C££££££££££££££££££££
      IMPLICIT REAL*8(A-H,O-Z)
      COMMON/SEP/ NDI(366), JRC(3),XJN(12)
      COMMON/AAA/ NEL,NNP,NEQ,NHBD,NBC,NTE1,NTE2,NTE3,NTE4,
     1 NNE1,NNE2,NNE3,NNE4,NDF,NRF,NRS,DETJ
      COMMON/BBB/ D(6,6),D1(6,6),Z(12,3),POIS(12,6),MCODE(12,20),
     1          EK(60,60) ,H(6,60),LRF(12),IDENT(12),RAW(1),EM(6
C
C          CALCULATE   HALF - BANDWIDTH
C
      JHBD = 1
      DO  266  I =  1, NEL
      LET =  IDENT(I)
      GO TO (256,257,258,260) ,LET
256   NER = NNE1
      GO TO 259
257   NER = NNE2
      GO TO  259
258   NER = NNE3
      GO TO 259
260   NER=NNE4
259   MET = 10000
      JET = 1
      DO  266 J = 1, NER
      IF  (MCODE(I , J) .LT. MET)    MET = MCODE(I,J)
      IF  (MCODE(I,  J) .GT. JET)    JET = MCODE(I,J)
      IF  ((JET - MET). GT. JHBD)    JHBD =(JET - MET )
266   CONTINUE
      NHBD = (JHBD+ 1 )*NDF
      WRITE(6,207) NHBD
C#####
207   FORMAT(8X,20HHALF BANDWIDTH IS  =,I5)
      RETURN
      END
C££££££££££££££££££££
      SUBROUTINE PLOAD(PR)
      IMPLICIT REAL*8(A-H,O-Z)
      COMMON/CCC/ X(128),Y(128),Z(128),NZN(366) ,NFIX(366) ,
     1 AST(12),EST(12),DIA(12),ELINE(6,6),ELINK(6,6)
      COMMON/AAA/ NEL,NNP,NEQ,NHBD,NBC,NTE1,NTE2,NTE3,NTE4,
     1 NNE1,NNE2,NNE3,NNE4,NDF,NRF,NRS,DETJ
      COMMON/REL/ U(366),P(366),PT(366),U1(366),U10(366),U2(366)
     1   ,U20(366),U0(366),P1(366),PS(366),PIU(366),PIT(366)
      DO 1 I = 1,NEQ
      J = NZN(I)
1     IF(J.EQ.0) PIT(I) = PIU(I) * PR
      RETURN
      END
      SUBROUTINE PROPL(T,J,PROP,DT,INT1,INT,TL)
      IMPLICIT REAL*8(A-H,O-Z)
C
C
C
      DIMENSION A(2)
      IF(J.GT.0) GO TO 200
C...       COMPUTE VALUE AT TIME T
      PROP = 0.0
      IF(T.LT.TMIN.OR.T.GT.TMAX) RETURN
      PROP = A(1) + A(2)*T
      RETURN
200   READ(5,*)K,L,TMIN,TMAX,A(1),A(2)
CXXXXX
      WRITE(6,2000) K,L,TMIN,TMAX,A(1),A(2)
C#####
2000  FORMAT(5X,'PROPORTIONAL LOAD TABLE'//'NUMBER TYPE.',
     1     'MINIMUM TIME','MAXI TIME ',5X,'A1',13X,'A2'
     2     /2I8,4G15.5)
      INT = (TMAX -TMIN)/DT
      TL = TMAX -(INT*DT + TMIN )
      IF(TL.GT.1.E-4) GO TO 1
      INT1 = INT
      RETURN
1     INT1= INT + 1
      RETURN
      END
      SUBROUTINE TIMING(NTIM)
      IMPLICIT REAL*8(A-H,O-Z)
      INTEGER*4 ICP,ITM1,ITM2
      DOUBLEPRECISION TIM
      CALL CTIM£A(ICP)
C+++++
      CALL TIME£A(TIM)
C+++++
      WRITE(6,101)NTIM,TIM,ICP
C#####
101   FORMAT(I5,A8,I10)
      GO TO (1,2),NTIM
```

```
1       ITM1 = ICP
        RETURN
2       ITM2 = ICP
        RTM = FLOAT((ITM2 - ITM1)/100.0)
        WRITE(6,100) RTM
C#####
100     FORMAT(1H+,50X,F10.2,'SECS')
        RETURN
        END
        SUBROUTINE PAVD
        IMPLICIT REAL*8(A-H,O-Z)
        COMMON/AAA/ NEL,NNP,NEQ,NHBD,NBC,NTE1,NTE2,NTE3,NTE4,
       1 NNE1,NNE2,NNE3,NNE4,NDF,NRF,NRS,DETJ
        COMMON/REL/ U(366),P(366),PT(366),U1(366),U10(366),U2(366)
       1  ,U20(366),U0(366),P1(366),PS(366),PIU(366),PIT(366)
        CALL WRITE1(U,NEQ,4HU    ,2)
        CALL WRITE1(U1,NEQ,4HU1   ,2)
        CALL WRITE1(U2,NEQ,4HU2   ,2)
        RETURN
        END
        SUBROUTINE STDISP
        IMPLICIT REAL*8(A-H,O-Z)
        COMMON/AAA/ NEL,NNP,NEQ,NHBD,NBC,NTE1,NTE2,NTE3,NTE4,
       1 NNE1,NNE2,NNE3,NNE4,NDF,NRF,NRS,DETJ
        COMMON/REL/ U(366),P(366),PT(366),U1(366),U10(366),U2(366)
       1  ,U20(366),U0(366),P1(366),PS(366),PIU(366),PIT(366)
        WRITE(6,2002)
C#####
2002    FORMAT(1H1 , 5X,6H NODES, 8X, 10H X- DISPL., 8X,9H Y-DISPL.
       1 8X, 9H Z-DISPL.)
        DO 912 I=1,NNP
912     WRITE(6,412) I , U(3*I-2)   ,U(3*I-1) , U(3*I )
C#####
412     FORMAT(/,5X, I5, 6X, E16.8, 6X, E16.8, 6X, E16.8)
        RETURN
        END
```

```
  FACTecC
    0.901600   6.21000E-03
   E
    5444.44
    5444.44
142.5
290
  TEa
    56.2500
    56.2500
  TE1,TE2,FAC1,FAC2,ec1,ec2
    100.0000   20.0000   0.970000   1.00000   3.50000E-03   2.50000E-03
  FACTecC
    0.986406   2.95312E-03
   E
    12525.8
    12525.8
47.5
406
  TEa
    314.000
    314.000
  TE1,TE2,FAC1,FAC2,ec1,ec2
    400.000   300.000   0.850000   0.910000   7.50000E-03   6.00000E-03
  FACTecC
    0.901600   6.21000E-03
   E
    5444.44
    5444.44
47.5
```

Table AII.2. Table for variation of steel strength with time
$B = 285\,\text{mm},\ H = 580\,\text{mm},\ H1 = 531\,\text{mm},\ L = 8000\,\text{mm},\ As = 1631\,\text{mm}^2$

Times (h)	*EC coefficient strength (MPa)*	*HZ coefficient strength (MPa)*
0	420	420
0.5	420	379.3
1	420	322.9
1.5	390	278.3
2	358.4	224
2.5	317.2	192.6
3	263.4	157.1

1.7(c) U L F Wickstrom program on thermal analysis

Reproduced courtesy of U L F Wickstrom and the Lund Institute of Technology.

```
      SUBROUTINE PROG2(IX,IY,NN,NE,NR,N,KTOP,NODFL,MNODFL,X,Y,T,TT,TMAX,
     1 ELA,EV4,A,MAX,P,W,EN,F,FLOW,AXIAL,NODCPL,NODINT,DTA)
C-------------------------------------------------------------------------------
C-----
C-----                        *** T A S E F ***
C-----
C-----TEMPERATURE ANALYSIS OF STUCTURES EXPOSED TO FIRE
C-----
C-----FINITE ELEMENT PROGRAM FOR ANALYSIS OF TRANSIENT NONLINEAR
C-----HEAT TRANSFER PROBLEMS
C-----
C-----PROGRAMMED BY
C-----ULF WICKSTROM
C-----LUND INSTITUTE OF TECHNOLOGY
C-----MARCH 1979
C-----
C-------------------------------------------------------------------------------
C-----THIS IS THE MAIN CONTROL ROUTINE
C-----
C-----DEFINITIONS OF VARIABLES
C-----IX, IY      NUMBER OF X- AND Y- LINES
C-----NN          NUMBER OF NODES IN BASE STRUCTURE
C-----NE          NUMBER OF ELEMENTS IN BASE STRUCTURE
C-----NR          NUMBER OF REGIONS
C-----N           VECTOR OF REGION NUMBERS
C-----KTOP        NODES ADJACENT TO EACH ELEMENT
C-----NODEL       ELEMENTS ADJACENT TO EACH NODE
C-----MNODEL      NUMBER ELEMENTS ADJACENT TO EACH NODE
C-----X, Y        NODE COORDINATES
C-----T           CURRENT NODAL TEMPERATURES
C-----TT          MAXIMUM NODAL TFMPERATURE5
C-----TMAX        TRUE IF MAXIMUM NODAL TEMPERATURE OBTAINED
C-----ELA,EV4     DUMMY GEOMETRICAL CONSTANTS
C-----A           HEAT CONDUCTION MATRIX
C-----P           HEAT CAPACITY VECTOR
C-----W           NODAL VOLUME VECTOR
C-----EN          MODAL ENTHALPY VECTOR
C-----F           INTERNAL NODAL HEAT FLOW VECTOR
C-----FLOW        EXTERNAL NODAL HEAT FLOW VECTOR
C-----AXIAL       TRUE IF AXISYMMETRIC PROBLEM
C-----NODCPL      INDICATES COUPLED NODES
C-----NODINT      INDICATES INTERFACE NODES
C-----DTA         DUMMY VECTOR FOR CRITICAL TIME INCREMENT CALCULATION
C-----
C-----PARAMETER CONSTANT5
C-----
```

```
      SUBROUTINE OUTMA2(IX,IY,NN,NE,X,Y,TIME,KTIME,T,TT,TMAX,FLOW,AXIAL)
C-----THIS ROUTNE PRINTS MAXIMUM CALCULATED NODAL TEMPERATURES
      COMMON/FIRE/TIM(5C),TB(50),TITFIR
      INTEGER TITFIR(18)
      LOGICAL TMAX,AXIAL
      DIMENSION X(NN),Y(NN),T(NN),TT(NN),TMAX(NN),FLOW(NN)
      PRINT 200,TITFIR,X(NN),Y(NN)
      IDUM1=1-IY
      DO 10 I=1,IX
      IDUM1=IDUM1+IY
      IDUM2=IDUM1+IY-1
      IF (IY.LE.7) PRINT 210, (J,TT(J),J=IDUM1,IDUM2)
      IF (IY.GT.7) PRINT 230, (TT(J),J=IDUM1,IDUM2)
   10 CONTINUE
      PRINT 220,TIME,KTIME
  200 FORMAT(/////1X,75(1HF)/2H,F/*F       MAXIMAL TEMPERATURES'/' F *,
      1 18A4/' F XMAX=',F8.3,1CX,'YMAX=',F8.3/' F')
  210 FORMAT(' F',13(I5,F5.0))
  220 FORMAT(2H F/2H F/' F MAX-TIME',F7.2,10X,'NUMBER OF '
      1         'TIME INCREMENTS',I5/2H F/2H F/2H F,75(1HF))
  230 FORMAT(' F',18F7.C)
      RETURN
      END

      SUBROUTINE OUT2(IX,IY,NN,NE,X,Y,TIME,KTIME,DELTI,T,TT,TMAX,FLOW,
      1     TFIRE,NODT,AXIAL)
C-----THIS ROUTINE PRINTS NODAL TEMPERATURES AND VOID AIR TEMPERATURES
      DIMENSION X(NN),Y(NN),T(NN),TT(NN),TMAX(NN),FLOW(NN)
      LOGICAL TMAX,AXIAL,LDUM,LEN
      COMMON/ENCON/H(50),TAIR(2)
      COMMON/ENCLOS/LEN,NENC,NENCNG(2),IGREN(2,4),NNODEN(2),
      1     INODEN(100),XSYM(7),YSYM(2)
      COMMON/TOUT/II,TOUT(100),TIMMAX,DTMAX,TIMFAC,KTMAX,KUPDA
      TIME1=TIME-DELTI
      DO 5 IJ=1,NN
      IF(TMAX(IJ)) GOTO 5
C-----IF THE NODAL TEMPERATURE DECREASES SET TMAX=.TRUE. AND PRINT
C-----MAX TEMPERATURE TT
      IF(TT(IJ).GT.1.001*T(IJ))
      1     PRINT 200,IJ,TT(IJ),TIME1,DELTI
      IF(TT(IJ).GT.1.001*T(IJ)) TMAX(IJ)=.TRUE.
      TT(IJ)=AMAX1(TT(IJ),T(IJ))
    5 CONTINUE
C-----IF TIME=TOUT PRINT ALL TEMPERATURES
      IF((TIME-TOUT(II)).LT.-1.E-4) GOTO 70
      PRINT 100,TIME,KTIME,TFIRE,NODT
      IF(.NOT.LEN) GOTO 30
      PRINT 300
      DO 20 I=1,NENC
   20 PRINT 310,I,TAIR(I)
   30 CONTINUE
      II1=II+1
      IDUM1=1-IY
      LDUM=IY.LT.7
      DO 10 I=1,IX
      IDUM1=IDUM1+IY
      IDUM2=IDUM1+IY-1

      SUBROUTINE BRBCA(BR,BC,EPSIG,BET,BAR,NUMI,N3,ING1)
C-----FORM BOUNDARY RADIATION AND CONVECTION MATRICES
      DIMENSION BR(NUMI,2),BC(NUMI,2),BAR(NB,NUMI)
      BR(1,1)=0.
      BR(1,2)=.33333333*BAR(ING1,2)
      NUM1=NUMI-1
      IF(NUM1.EQ.1) GOTO 20
      DO 10 I=2,NUM1
      BR(I,1)=.16666667*BAR(ING1,I)
      BR(I,2)=.3333333*(BAR(ING1,I)+BAR(ING1,I+1))
   10 CONTINUE
   20 CONTINUE
      BR(NUM1,1)=.16666667*BAR(ING1,NUMI)
      BR(NUM1,2)=.33333333*BAR(ING1,NUMI)
C
      DO 30 I=1,NUMI
      DO 30 J=1,2
      BC(I,J)=BET*BR(I,J)
      BR(I,J)=EPSIG*BR(I,J)
   30 CONTINUE
      RETURN
      END

      SUBROUTINE BRBCB(BR,BC,TR,TC,TRD,TCD,NUMI,DTA,NN,MAX,FLOW,TG,
      1     T,ING1)
C-----THIS ROUTINE CALCULATES EXTERNAL HEAT FLOW BY RADIATION AND
C-----CONVECTION AND ADDS THE CORRESPONDING CONTRIBUTIONS TO THE
C-----VECTOR DATA FOR CALCULATION OF CRITICAL TIME INCREMENT
      DIMENSION BR(NUMI,2),BC(NUMI,2),DTA(NN),FLOW(NN),T(NN)
      1,  TR(NUMI),TC(NUMI),TRD(NUMI),TCD(NUMI)
      PARAMETER NB=10,NNP=30,NNB2=2*NNB
      COMMON/BNOD/NUMB(NB),NBOUND(NB,NNB),BAREA(NB,NNB),
      1     EPSG(NB),BETA(NB),CPG(NB),FA(NB)
      LOGICAL FA
C
C-----FIRST NODE
C
      NODE=NBOUND(ING1,1)
      TR2=TR(1)
      TC2=TC(1)
      TR3=TR(2)
      TC3=TC(2)
```

```
      INTEGER EN
      IND=1
C-----FORM ZONE CONVECTION ARRAY
C-----EACH VOID
      DO 150 EN=1,NENC
      SYM=XSYM(EN).OR.YSYM(EN)
      IN=0
      NENG=NENCNG(EN)
C-----EACH NODE GROUP
      D0 10 IG=1,NENG
      I1=IGREN(EN,IG)
      NUMI=NUMB(I1)
      BE=BETA(I1)
C-----EACH ZONE
      DO 10 I=2,NUMI
      IN=IN+1
10    HZ(IN)=BE*BAREA(I1,I)
C-----FORM NODE CONVECTION ARRAY
      CALL HTRANS(HZ,H(IND),IN,SYM)
      N=IN
      IF(SYM) N=N+1
      IND=IND+N
150   CONTINUE
      RETURN
      END

      SUBROUTINE TIME
C-----READ TIME INTEGRATION CONTROL DATA
      COMMON/TOUT/II,TOUT(100),TIMMAX,DTMAX,TIMEAC,KTMAX,KUPDA
      PRINT 200
C-----
      READ I00,NT,TIMMAX,DTMAX,TIMFAC,KTMAX,KUPDA
C-----
      IF(DTMAX.EQ.0) DTMAX=TIMMAX
      IF(TIMFAC.EQ.0) TIMFAC=.8
      IF(KTMAX.EQ.0) KTMAX=1000
      IF(KUPDA.EQ.0) KUPDA=1
C-----
      READ 100,(TOUT(I),I=1,NT)
C-----
      PRINT 210,TIMMAX,DTMAX,TIMFAC,KTMAX,KUPDA
      PRINT 220,(TOUT(I),I=1,NT)
100   FORMAT( )
220   FORMAT(' PRINT OUT TIMES',3X,8G7.2/(19X,8G7.2))
200   FORMAT(//' TIME'/' ****'/)
210   FORMAT(' MAXIMUM TIME=',G8.3/' MAXIMUM TIME INCREMENT=',G8.3/
      1     ' CRITICAL TIME INCREMENT FACTOR=',G8.3/
      2     ' MAXIMUM NUMBER OF TIME INCREMENTS=',I5/
      3     ' NUMBER OF STEPS BETWEEN UPDATING OF CONDUCTION MATRIX=',I5)
      RETURN
      END
```

```
      SUBROUTINE ENRAD1(X,Y)
C-----FORM RADIATION MATRICES FOR EACH VOID AND STORE THEM IN
C-----THE VECTOR E.
C-----CALCULATE VIEW-FACTOR MATRIX VIEW AND ZONE AREA VECTOR D
      DIMENSION X(1),Y(1),A(25,25),B(25,25)
      PARAMETER NB=10,NNB=30,NNB2=2*NNB
      COMMON/BNOD/NUMB(NB),NBOUND(NB,NNB),BAREA(NB,NNB),
      1     EPSG(NB),BETA(NB),CPG(NB),FA(NB)
      COMMON/ENCLOS/LEN,NENC,NENCNG(2),IGREN(2,4),NNODEN(2),
      1     INODEN(100),XSYM(2),YSYM(2)
      COMMON/ENRAD/E(1000)
      COMMON/UNIT/SIGMA,TABS
      COMMON/DIM/MAXNG,MAXNOD
      COMMON/DUMMY/D(25),DUM2(25)
      DIMENSION VIEW(25,25)
      EQUIVALENCE (A(1),VIEW(1))
      DATA IND,IE/0,1/
      LOGICAL LEN
      LOGICAL XSYM,YSYM,SYM
      INTEGER EN
C-----EACH VOID
      DO 150 EN=1,NENC
      CALL VIEWFC(X,Y,D,EN,VIEW,MAXNOD)
C-----FORM THE MATRICES A AND B
      NENG=NENONG(EN)
      IN=0
C-----EACH NODE GROUP
      DO 120 IG=1,NENG
      I1=IGREN(EN,IG)
      NUMI=NUMB(I1)
C-----EACH ZONE
      DO 120 I=2,NUMI
      IN=IN+1
      JN=0
      DO 120 JG=1,NENG
      J1=IGREN(EN,JG)
      NUMJ=NUMB(J1)
      EPSJ=EPSG(J1)
      DO 120 J=2,NUMJ
      JN=JN+1
      B(IN,JN)=VIEW(IN,JN)*SIGMA
      A(IN,JN)=-VIEW(IN,JN),(1.-EPSJ)/EPSJ/D(JN)
      IF B(IN.NE.JN) GOTO 120
      B(IN,JN)= -SIGMA+B(IN,JN)
      A(IN,JN)=1./EPSJ/D(JN)+A(IN,JN)
120   CONTINUE
      N=IN
C-----INVERT A AND STORE RESULT IN A
      CALL INVER(A,N,MAXNOD)
C-----MULTIPLY A AND B AND STORE RESULT IN A
      CALL MULT(A,B,N,MAXNOD)
```

```
      SYM=.FALSE.
      IF(XSYM(EN).OR.YSYM(EN)) SYM=.TRUE.
      NZ=N
      IF(SYM) N=N+1
C-----TRANSFORM THE LOCAL RADIATION MATRICE A AND STORE THE RESULT IN
C-----VECTOR E
C-----B IS EMPLOYED AS A DUMMY MATRIX
      CALL ETRANS(A,B,E(IE),N,NZ,SYM,MAXNOD)
      IE=IE+N*N

      SUBROUTINE FQBNDB(T,FLOW,DTA,NN,MAX,TFIRE)
C-----THIS ROUTINE PREPARES CALCULATION OF PRESCRIBED BOUNDARY FLOW
      DIMENSION T(NN),DTA(NN),FLOW(NN)
      PARAMETER NB=10,NNB=30,NNB2=2*NNB
      COMMON/FQB/NFQNG,NFQG(NB),TR(NNB),TC(NNB)
      1     ,BR(NNB2),BC(NNB2),TRD(NNB),TCD(NNB)
      COMMON/BNOD/NUMB(NB),NBOUND(NB,NNB),BAREA(NB,NNB),
      1     EPSG(NB),BETA(NB),CPG(NB),FA(NB)
      COMMON/UNiT/SIGMA,TABS,TINIT,TAMB,TAMB4
      LOGICAL FA
C-----NULL FLOW VECTOR
      DO 777 1=1,NN
777   FLOW(I)=0.
C-----RETURN IF NO PRESCRIBED BOUNDARY FLOW
      IF(NFQNG.EQ.0) RETURN
      TF4=(TFIRE+TABS)**4
      IND=1
C-----EACH BOUNDARY FLOW NODE GROUP
      DO 30 IB=1,NFQNG
      TG4=TAMB4
      TG=TAMB
      ING1=NFQG(IB)
      IF(FA(ING1)) TG=TFIRE
      IF(FA(ING1)) TG4=TF4
      NUMI=NUMB(ING1)
      CP=CPG(ING1)
      DO 20 I=1,NUMI
      NODE=NBOUND(ING1,I)
      TNODE=T(NODE)
      TNABS=TNODE+TABS
C-----RADIATION
      TRD(I)=4.*TNABS**3
      TR(I)=TG4-TNABS**4
C-----CONVECTION
      DUM=TG-TNODE
      TCD(I)=CP*ABS(DUM)**(CP-1.)
```

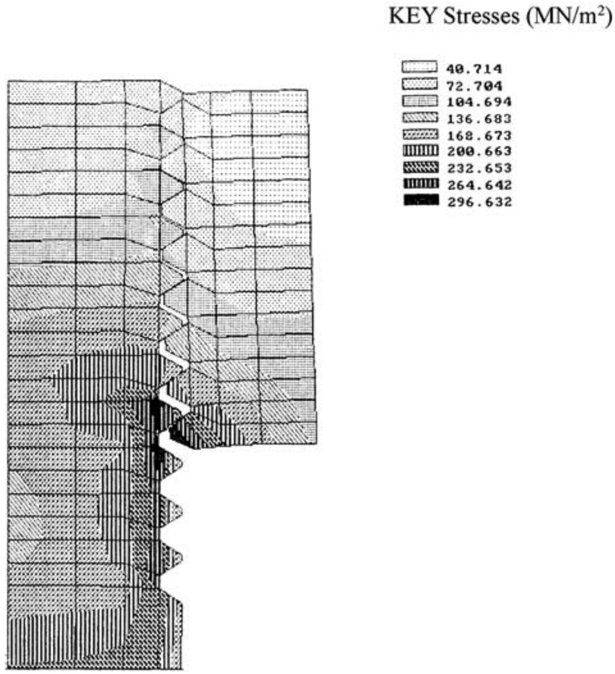

Figure AII.5 Equivalent stress distribution in bolts and nuts using mixed finite elements.

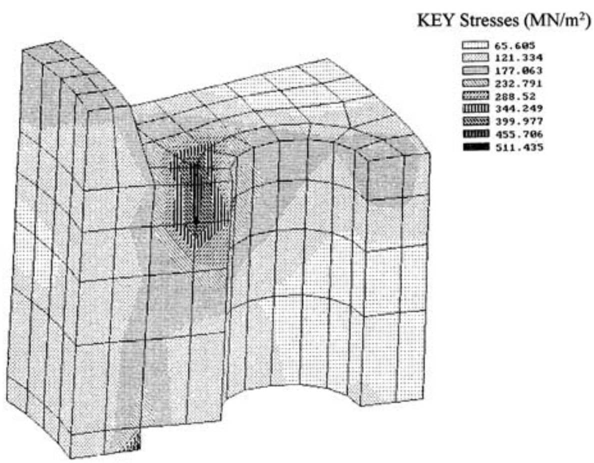

Figure AII.6 Equivalent stress distribution in Flanges.

Appendix III

Dynamic Finite Element Analysis-Solution Procedures

Appendix III

Dynamic Finite Element Analysis-Formulations Super Element and Substructuring

Dynamic finite element analysis formulations

In general terms, such formulations are described by the following:

$$\left[\begin{array}{c|c} K & K_{\mathrm{R}} \\ \hline K_{\mathrm{R}}^{\mathrm{T}''} & K_{\mathrm{RR}} \end{array}\right]\left\{\begin{array}{c} U \\ \hline U_{\mathrm{R}} \end{array}\right\}=\left\{\begin{array}{c} F \\ \hline F_{\mathrm{R}} \end{array}\right\} \tag{1}$$

The subscript R represents reaction forces. The top half of Equation (1) is used to solve for $\{U\}$:

$$\{U\}=-[K]^{-1}[K_{\mathrm{R}}]\{U_{\mathrm{R}}\}+[K]^{-1}\{F\} \tag{2}$$

The reaction forces $\{F_{\mathrm{R}}\}$ are computed from the bottom half of the equation as

$$\{F_{\mathrm{R}}\}=[K_{\mathrm{R}}]^{\mathrm{T}''}\{U\}+\{K_{\mathrm{RR}}\}\{U_{\mathrm{R}}\} \tag{3}$$

Equation (2) must be in equilibrium with Equation (3).

III.1. *The superelement and substructuring*

For large structures with complicated features, a substructure (superelement) may be adopted on the lines suggested in Equation (1). This superelement may then be used as a reduced element from the collection of elements. If subscripts γ and γ' represent the retained and removed degrees of freedom of the equations partitioned into two groups, then the expressions in Equation (1) can be written as

$$\left[\begin{array}{c|c} K_{\gamma\gamma} & K_{\gamma\gamma'} \\ \hline K_{\gamma'\gamma} & K_{\gamma'\gamma'} \end{array}\right]\left\{\begin{array}{c} U_{\gamma} \\ \hline U_{\gamma'} \end{array}\right\}=\left\{\begin{array}{c} F_{\gamma} \\ \hline F_{\gamma'} \end{array}\right\} \tag{4}$$

Equation (4) when expanded assumes the following form:

$$\{F_{\gamma}\}=[K_{\gamma\gamma}]\{U_{\gamma}\}+[K_{\gamma\gamma'}]\{U_{\gamma'}\} \tag{5}$$

$$\{F_{\gamma'}\}=[K_{\gamma'\gamma}]\{U_{\gamma}\}+[K_{\gamma'\gamma}]\{U_{\gamma'}\} \tag{6}$$

When a dynamic analysis is carried out, the subscript γ (retained) represents the dynamic degrees of freedom.

When Equation (6) is solved, the value of $U_{\gamma'}$ is then written, similarly to Equation (2),

$$\{U_{\gamma'}\}=[K_{\gamma'\gamma'}]^{-1}\{F_{\gamma'}\}-[K_{\gamma'\gamma'}]^{-1}[K_{\gamma'\gamma}]\{U_{\gamma}\} \tag{7}$$

Substituting $\{U_{\gamma'}\}$ into Equation (3) gives:

$$[[K_{\gamma\gamma}]-[K_{\gamma'\gamma}][K_{\gamma\gamma'}]^{-1}[K_{\gamma'\gamma}]]\{U_{\gamma}\}=[\{F_{\gamma}\}-[K_{\gamma\gamma'}][K_{\gamma\gamma'}]^{-1}\{F_{\gamma'}\}] \tag{8}$$

or

$$[\overline{K}]\{\overline{U}\}=\{\overline{F}\} \tag{9}$$

where

$$[\overline{K}] = [K_{\gamma\gamma}] - [K_{\gamma\gamma'}][K_{\gamma'\gamma'}]^{-1}[K_{\gamma'\gamma}] \tag{9a}$$

$$\{\overline{F}\} = \{F_\gamma\} - [K_{\gamma\gamma'}][K_{\gamma'\gamma'}]^{-1}\{F_{\gamma'}\} \tag{9b}$$

$$\{\overline{U}\} = \{U_\gamma\} \tag{9c}$$

and $[\overline{K}]$ and $\{\overline{F}\}$ are generally known as the substructure stiffness matrix and load vector, respectively.

In the above equations, the load vector for the substructure is taken as a total load vector. The same derivation may be applied to any number of independent load vectors. For example, one may wish to apply thermal, pressure, gravity and other loading conditions in varying proportions. Expanding the right-hand sides of Equations (5) and (6) gives:

$$\{F_\gamma\} = \sum_{i=1}^{n}\{F_{\gamma i}\} \tag{10}$$

$$\{F_{\gamma'}\} = \sum_{i-1}^{n}\{F_{\gamma' i}\} \tag{11}$$

where $n =$ the number of independent load vectors.

Substituting into Equation (9c)

$$\{\overline{F}\} = \sum_{i=1}^{n}\{F_{\gamma\gamma'}\} - [K_{\gamma\gamma'}][K_{\gamma'\gamma'}]^{-1}\sum_{i=1}^{n}\{F_{\gamma' i}\} \tag{12}$$

where the initial load $\{P_t\}$ is specified by

$$\{P_t\} = -[\Delta C_{0\to t}]\{\dot{U}_t\} - \{\Delta K_{0\to t}\}\{\delta_t\} \tag{13}$$

To obtain the solution at time $t + \Delta t$, the equation is stated as

$$\begin{aligned}[M]\{\ddot{U}_{t+\Delta t}\} + [C_0]\{\dot{U}_{t+\Delta t}\} + [K_0]\{U_{t+\Delta t}\} \\ = \{R_{t+\Delta t}\} + \{P_t\} + \{\Delta P_{t\to t+\Delta t}\}\end{aligned} \tag{14}$$

$\{\Delta P_{t\to t+\Delta t}\}$ represents the influence of the nonlinearity during the time increment t and is determined by iteration and satisfied for $t + \tau$, where $\tau = \theta\Delta t$ ($\theta > 1.37$ for an unconditionally stable method) when applied to a linear problem. $[\Delta C_{0\to t}]$ and $[\Delta K_{0\to t}]$ represent the change of $[C]$ and $[K]$, respectively, from $t = 0$ to t.

To obtain the solution at time $t + \Delta t$, Equation (15) can be written as

$$\begin{aligned}[M]\{\ddot{U}_{t+\Delta t}\} + [C_0]\{\dot{U}_{t+\Delta t}\} + [K_0]\{U_{t+\Delta t}\} \\ = \{R_{t+\Delta t}\} + \{F_t\} + \{\Delta F_{t\to t+\Delta t}\}\end{aligned} \tag{15}$$

$\{\Delta P_{t\to t+\Delta t}\}$ represents the influence of the nonlinearity during the time increment t and is determined by iteration:

$$\begin{aligned}\{\Delta P_{t\to t+\Delta t}\} = &-[\Delta C_{0\to t}]\{\Delta\dot{U}_{t\to t+\Delta t}\} - [\Delta C_{t\to t+\Delta t}](\{\dot{U}\} + \{\Delta\dot{U}_{t\to t+\Delta t}\}) \\ &-[\Delta K_{0\to t}]\{\Delta U_{t\to t+\Delta t}\} \\ &-[\Delta K_{t\to t+\Delta t}](\{U_t\} + \{\Delta U_{t\to t+\Delta t}\})\end{aligned} \tag{16}$$

$(\Delta P_{t\to t+\Delta t})$ is calculated using the initial stress approach.

A modified Newton–Raphson or initial stress approach is adopted for solving these nonlinear equations. A step-by-step integration method is given. Using these methods along with acceleration and convergence procedures described in this chapter allows successful solution of finite element-based problems.

Reduced linear transient dynamic analysis

This is a reduced from of nonlinear transient dynamic analysis. This analysis is carried out faster than the nonlinear analysis since the matrix of Equation (15) requires to be inverted once, and the analysis is reduced to a series of matrix multiplications and essential degrees of freedom (dynamic or master of freedoms) to characterize the response of the system. The analysis generally has restrictions such as constant $[M]$, $[C_t]$, $[K_t]$ and time interval for all iterations and nodal forces applied at dynamic or master degrees of freedom.

Quadratic integration

$$\begin{aligned}\left(\frac{1}{\Delta t^2}[M]_{\mathrm{R}} + \frac{3}{2\Delta t}[\hat{C}_t]_{\mathrm{R}} + [K_t]_{\mathrm{R}}\right)\{U_t\}_{\mathrm{R}} \\ = \{F(t)\}_{\mathrm{R}} + [M]_{\mathrm{R}}\frac{1}{\Delta t^2}(2\{U_{t-1}\}_{\mathrm{R}} - \{U_{t-2}\}_{\mathrm{R}}) \\ + \frac{1}{\Delta t}(2\{U_{t-1}\}_{\mathrm{R}} - \tfrac{1}{2}\{U_{t-2}\}_{\mathrm{R}})\end{aligned} \tag{17}$$

The symbol R represents reduced matrices and vectors.

Cubic integration

$$\begin{aligned}\left(\frac{2}{\Delta t^2}[M]_{\mathrm{R}} + \frac{11}{6\Delta t}[C_t]_{\mathrm{R}} + [K_t]_{\mathrm{R}}\right)\{U_t\}_{\mathrm{R}} \\ = \{F(t)\}_{\mathrm{R}} + [M]_{\mathrm{R}}\frac{1}{\Delta t^2}(5\{U_{t-1}\}_{\mathrm{R}} - 4\{U_{t-2}\}_{\mathrm{R}} + \{U_{t-3}\}) \\ + [C_t]_{\mathrm{R}}\frac{1}{\Delta t^2}(3\{U_{t-1}\}_{\mathrm{R}} - \tfrac{3}{2}\{U_{t-2}\}_{\mathrm{R}} + \tfrac{1}{3}\{U_{t-3}\}_{\mathrm{R}})\end{aligned} \tag{18}$$

Mode frequency analysis

The equation of motion for an undamped structure with no applied forces is written as

$$[M]\{\ddot{U}_t\} + [K_t']\{U_t\} = \{0\} \tag{19}$$

$[K_t']$ the structure stiffness matrix, may include stress-stiffening effects.

The system of equations is initially condensed down to those involved with the master (dynamic) degrees of freedom.

The number of dynamic degrees of freedom would at least be equal to two times the selected frequencies. The reduced form of Equation (19) can be written as

$$[M]_{\mathrm{R}}\{\ddot{U}_t\}_{\mathrm{R}} + [K_t']_{\mathrm{R}}\{U\}_{\mathrm{R}} = \{0\} \tag{20}$$

For a linear system, free vibrations of harmonic type are written as

$$\{U_t\}_{\mathrm{R}} = \{\psi_i\}_{\mathrm{R}}\cos\omega_i t \tag{21}$$

where $\{\psi_i\}_R$ = the eigenvector representing the shape of the ith frequency; ω_i = the ith frequency (radians/unit time); and t = time.

Equation (19) assumes the form

$$(-\omega_i^2[M]_R + [K_t']_R\{\psi_i\}_R = \{0\} \tag{22}$$

which is an eigenvalue problem with n values of ω^2 and n eigenvectors $\{\psi_i\}_R$ which satisfy Equation (22), where n is the number of dynamic degrees of freedom. Using standard iteration procedures, Equation (22) will yield a complete set of eigenvalues and eigenvectors.

Each eigenvector, $\{\psi_i\}_R$, is then normalized such that:

$$\{\psi_i\}_R^{T''}[M]_t\{\psi_i\}_R = 1 \tag{23}$$

These n eigenvectors are now expanded to the full set of structure modal displacement degrees of freedom:

$$\{\psi_{\gamma' i}\}_R = [K_{\gamma'\gamma'}]^{-1}[K_{\gamma'\gamma}]\{\psi_i\}_R \tag{24}$$

where $\{\psi_i\}_R$ = the slave degree of freedom vector of mode i; and $[K_{\gamma'\gamma'}]$, $[K_{\gamma'\gamma}]$ = submatrix parts as shown in Equation (24) onwards.

The above dynamic analysis approach is generally adopted for structures subjected to normal dynamic loads, wind, wave and seismic loads. The above analysis, with modifications, is also applied to missile and aircraft explosions/impact problems.

Spectrum analysis

Spectrum analysis is an extension of the mode frequency analysis, with both base and force excitation options. The base excitation option is generally suitable for seismic and wave applications. A direction vector and a response spectrum table will be needed in addition to the data and parameters required for the reduced model analysis. The response spectrum table generally includes displacements, velocities and accelerations. The force excitation is, in general, used for wind and space structures and missile/aircraft impact. It requires a force distribution and an amplitude multiplier table in addition to the data and parameters needed for the reduced modal analysis. A study of the mass distribution is made. Generally the masses are kept close to the reaction points on the finite element mesh rather than the (master) degrees of freedom. It is important to calculate the participation factors in relation to a given excitation direction. The base and forced excitations are given below.

$$\tilde{\gamma}_i = \{\psi_i\}_R^{T''}[M]\{\tilde{b}\} \quad \text{for the base excitation} \tag{25}$$

$$\tilde{\gamma}_i = \{\psi_i\}_R^{T''}\{F_t\} \quad \text{for the force excitation} \tag{26}$$

where $\{\tilde{b}\}$ = the unit vector of the excitation direction; and $\{F_t\}$ = an input force vector.

The values of $\{\psi\}_R$ are normalized, and the reduced displacement vector is calculated from the eigenvector by using a mode coefficient $\tilde{M}$:

$$\{\tilde{U}\}_i = [\tilde{M}_i]\{\psi\}_i \tag{27}$$

where $\{\tilde{U}_i\}$ = the reduced displacement vector; and $[\tilde{M}_i]$ = the mode coefficient and where (a) for velocity spectra

$$[\tilde{M}_i] = \frac{[V_{si}]\{\tilde{\gamma}_i\}}{\omega_i} \tag{28}$$

(V_{si} = spectral velocity for the ith mode); (b) for force spectra

$$[\tilde{M}_i] = \frac{[\bar{f}_{si}]\{\tilde{\gamma}_i\}}{\omega_i^2} \tag{29}$$

($\bar{f}_{si}$ = spectral force for the ith mode); (c)

$$[\tilde{M}_i] = \frac{[a_{si}]\{\tilde{\gamma}_i\}}{\omega_i^2} \tag{30}$$

(a_{si} = spectral acceleration for the ith mode); (d)

$$[\tilde{M}_t] = \frac{[U_{si}]\{\tilde{\gamma}_i\}}{\omega_i^2}] \tag{31}$$

(U_{si} = spectral displacement for the ith mode);

$\{U\}_i$ may be expanded to compute all the displacements, as was done in Equation (2) onwards.

$$\{U_{\gamma'}\}_i = [K_{\gamma'\gamma'}]^{-1}[K_{\gamma'\gamma}]\{U_i\}_{\mathrm{R}} \tag{32}$$

where $\{U_{\gamma'}\}_i$ = the slave degree of freedom vector of mode i; and $[K_{\gamma'\gamma'}]$, $[K_{\gamma'\gamma}]$ = submatrix parts.

Sometimes an equivalent mass M_i^{e} is needed for the ith mode since it may not be a function of excitation direction. This M_i^{e} is computed as

$$[M_i^{\mathrm{e}}] = 1/\{\psi_i\}_{\mathrm{R}}^{\mathrm{T}''}\{\psi_i\}_{\mathrm{R}} \tag{33}$$

This is derived from the definition of the diagonal matrix of equivalent masses $[M^{\mathrm{e}}]$

$$[\psi]_{\mathrm{R}}^{\mathrm{T}''}[M_{\mathrm{e}}][\psi]_{\mathrm{R}} = [I] \tag{34}$$

where $[I]$ = the identity matrix; and $[\psi]_R$ = a square matrix containing all mode shape vectors.

Where damping is included, the damping ratio $D_{\mathrm{R}i}$ for the data input, including damping C_{e}, is given for a matrix of coupling coefficient as

$$D_{\mathrm{R}i} = C_{\mathrm{e}}\omega_{i/2} \tag{35}$$

where ω_{I} is the undamped natural frequency of the ith mode.

In between the modes i and j, a modified damping ratio $D'_{\mathrm{R}i}$ is

$$D'_{\mathrm{R}i} = D_{\mathrm{R}i} + 2/t_{\mathrm{e}}\omega_i \tag{36}$$

where t_{e} is the duration.

Summary of step-by-step integration method

Initialization

(1) Effective stiffness matrix $[K_0^*] = (6/\tau^2)[M] + (3/\tau)[C_0] + [K_0]$ (37)
(2) Triangularize $[K_0^*]$

For each time step:

Calculation of displacement $\{U_{t+\tau}\}$

(1) Constant part of the effective load vector

$$\begin{aligned}\{R^*_{t+\tau}\} =&\{R_t\} + \theta(\{R_{t+\Delta t}\} - \{R_t\}) + \{F_t\} + [M] \\ &+ \left(\left(\frac{6}{\tau^2}\right)\{U_t\} + \frac{6}{\tau}\{\dot{U}_t\} + 2\{\ddot{U}_t\}\right) \qquad \text{(B)} \\ &+ [C_0]\left(\frac{3}{\tau}\{U_t\} + 2\{\dot{U}_t\} + \frac{\tau}{2}\{U_t\}\right)\end{aligned} \tag{38}$$

(2) Initialization $i = 0$, $\{\Delta P^i_{t\to t+\tau}\} = 0$
(3) Iteration (C)
  (a) $i \to i+1$ (D)
  (b) Effective load vector $\{R^*_{t+\tau_{\text{tot}}}\} = \{R^*_{t+\tau}\} + \{\Delta P^{i-1}_{t\to t+\tau}\}$
  (c) Displacement $\{U^i_{t+\tau}\}[K^*_0]\{U^i_{t+\tau}\} = \{R^{*i}_{t+\tau_{\text{tot}}}\}$ (39)
  (d) Velocity $\{\dot{U}^i_{t+\tau}\} + (3/\tau)(\{U^i_{t+\tau}\} - \{U_t\}) - 2\{\dot{U}_t\} - (\tau/2)\{\ddot{U}_t\}$
  (e) Change of initial load vector caused by the nonlinear behaviour of the material $\{\Delta P^i_{t\to t+\tau}\}$

$$\begin{aligned}\{\Delta P^i_{t\to t+\tau}\} =& -[\Delta C_{0\to t}](\{\dot{U}^i_{t+\tau}\} - \{\dot{U}_t\}) - [\Delta C^i_{t\to t+\tau}]\{\dot{U}^i_{t+\tau}\} \\ & \times [\Delta K_{0\to t}](\{U^i_{t+\tau}\} - \{U_t\}) - [\Delta K^i_{t\to t+\Delta t}]\{U^i_{t+\tau}\}\end{aligned} \tag{40}$$

In fact, $\{\Delta P^i_{t\to t+\tau}\}$ is calculated using the initial-stress method.
  (f) Iteration convergence

$$||\{\Delta P^i_{t\to t+\tau}\} - \{\Delta P^{i-1}_{t\to t+\tau}\}||/||\{\Delta P^i_{t\to t+\tau}\}|| < \text{tol} \tag{41}$$

or analogously, on stress.

Note that $\{P\}$ could be any value of $\{F\}$.

Calculation of velocity, acceleration

Calculate new acceleration $\{\ddot{U}_{t+\Delta t}\}$, velocity $\{\dot{U}_{t+\Delta t}\}$, displacement $\{U_{t+\Delta t}\}$ and initial load $\{P_{t+\Delta t}\}$:

$$\begin{aligned}\{\ddot{U}_{t+\Delta t}\} &= (6/\theta\tau^2)(\{U_{t+\tau}\} - \{U_t\}) - (6/\tau\theta)\{\dot{U}_t\} + \left(1 - \frac{3}{\theta}\right)\{\ddot{U}_t\} \\ \{\dot{U}_{t+\Delta t}\} &= \{\dot{U}_t\} + \frac{\tau}{2\theta}\{\ddot{U}_t\} + \{\ddot{U}_{t+\Delta t}\} \\ \{U_{t+\Delta t}\} &= \{U_t\} + \frac{\tau}{\theta}\{\dot{U}_t\} + (\tau^2/6\theta^2)(2\{\ddot{U}_t\} + \{\ddot{U}_{t+\Delta t}\}) \\ \{P_{t+\Delta t}\} &= \{P_t\} + \{\Delta P^i_{t\to t+\tau}\}\end{aligned} \tag{42}$$

Calculation by quadratic integration

When the velocity varies linearly and the acceleration is constant across the time interval, appropriate substitutions are made to obtain the following equation:

$$[f_1[M] + f_2[C_t] + [K'_t]]\{U_t\} = \{F(t)\} + \{f_3([C_t], [M], U_t, U_{t2}, \ldots)\} \tag{43}$$

where f_1, f_2, f_3 = functions of time.

This results in an implicit time integration procedure. The only unknown is $\{U_t\}$ at each time point and this is calculated in the same way as in static analysis. Equation (43) is then written as:

$$\begin{aligned}&\left(\frac{2}{\Delta t_0 \Delta t_{01}}[M] + \frac{2\Delta t_0 + \Delta t_1}{\Delta t_0 t_{01}}[C] + [K'_t]\right)\{U_t\} \\ &\quad = \{F(t)\} + [M]\left(\frac{2}{\Delta t_0 \Delta t_1}\{U_{t-1}\} - \frac{2}{\Delta t_1 \Delta t_{01}}\{U_{t-2}\}\right) \\ &\quad\quad + [C_t]\left(\frac{\Delta t_{01}}{\Delta t_0 \Delta t_1}\{U_{t-1}\} - \frac{\Delta t_0}{\Delta t_{01}\Delta t_1}\{U_{t-2}\}\right)\end{aligned} \tag{44}$$

where

$\Delta t_0 = t_0 - t_1$
$\Delta t_1 = t_1 - t_2$
$\Delta t_2 = t_2 - t_3$
$t_0 =$ time of current iteration
$t_1 =$ time of previous iteration
$t_2 =$ time before previous iteration
$t_3 =$ time before t_2
$\Delta t_2 = \Delta t_0 + \Delta t_1 = t_0 - t_2$

Calculation by cubic integration

Equation 43 becomes cubic and is written as

$$\begin{aligned}(a_1[M] + a_2[C_t] + [K_t'])\{U_t\} \\ = \{F(t)\} + [M](a_3\{U_{t-1}\} - a_4\{U_{t-2}\} + a_5\{U_{t-3}\}) \\ +[C](a_6\{U_{t-1}\} - a_7\{U_{t-2}\} + a_8\{U_{t-3}\})\end{aligned} \tag{45}$$

where a_1 to a_8 are functions of the time increments; these functions are derived by inverting a four by four matrix.

For clear-cut solutions, the size of the time step between adjacent iterations should not be more than a factor of 10 in nonlinear cases and should not be reduced by more than a factor of 2 where plasticity exists.

Solution procedures: acceleration and convergence criteria

Criteria for convergence and acceleration

Convergence criteria

To ensure convergence to the correct solution by finer sub-division of the mesh, the assumed displacement function must satisfy the convergence criteria given below:

(a) displacements must be continuous over element boundaries;
(b) rigid body movements should be possible without straining; and
(c) a state of constant strain should be reproducible.

Euclidean norm is given by $\psi_i/R_i \leq C$. The term ψ_i represents the unbalanced forces and the norm of the residuals. With the aid of the iterative scheme described above, the unbalanced forces due to the initial stresses $\{\sigma_0\}$ become negligibly small. As a measure of their magnitude, the norm of the vector $||\psi_i||$ is used. The Euclidean norm and the absolute value of the largest component of the vector are written as

$$\begin{aligned}||\psi_i|| &= (|\psi_1|^2 + \cdots + |\psi_n|^2)^{1/2} \\ ||R_i|| &= (|\{R_i\}^T\{R^i\}|)^{1/2}\end{aligned} \tag{46}$$

the convergence criterion adopted is

$$||\psi|| = \max_i|\psi_i| < C = 0.001 \tag{47}$$

Uniform acceleration

Various procedures are available for accelerating the convergence of the modified Newton–Raphson iterations. Figure AIII.1. shows the technique of computing individual acceleration factors when δ_1 and δ_2 are known. Then, assuming a constant slope of the response curve, and from similar

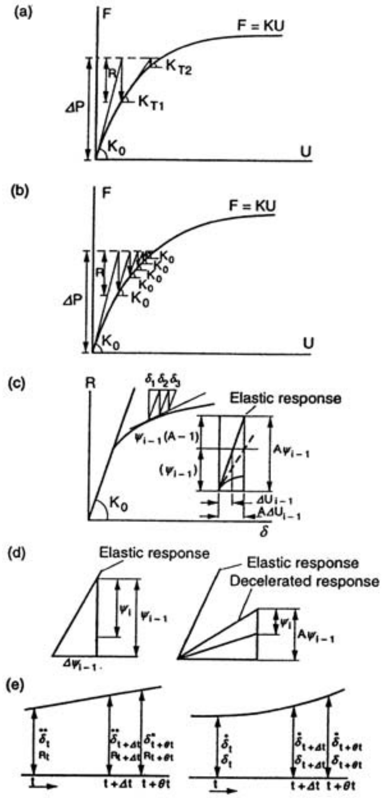

Figure AIII.1. (a) Newton-Raphson method. (b) Initial stress method. (Note that ΔP is a specific value of F.) (c) Technique of computing acceleration factor. (d) Graphical representation. (e) Linear acceleration and load assumptions of the Wilson θ method (left). Quadratic and cubic variation of velocity and displacement assumptions of the Wilson θ method (right).

triangles, the value of δ_3 is computed:

$$\frac{\delta_1}{\delta_2} = \frac{\delta_2}{\delta_3} \qquad \delta_3 = \delta_2 \frac{\delta_2}{\delta_1} \tag{48}$$

When δ_3 is added to δ_2, then the accelerated displacement δ_2' is expressed as

$$\delta_2' = \delta_2 + \delta_3 = \delta_2 \left(1 + \frac{\delta_2}{\delta_1}\right) = \alpha\delta_2 \tag{49}$$

where the acceleration factor α is

$$\alpha = 1 + \frac{\delta_2}{\delta_1} \tag{50}$$

Generally the range of α is between 1 and 2. The value of $\alpha = 1$ for zero acceleration, and the value of α reaches the maximum value of 2 when the slope of the $\delta - R$ curve approaches zero.

The acceleration factor α is computed individually for every degree of freedom of the system. The displacement vector obtained from the linear stiffness matrix $[k_0]$ is then multiplied by the $[\alpha]$ matrix having the above constants on its diagonals. The remaining components of $[\alpha]$ are zero. The accelerated displacement vector is then expressed as follows:

$$\{\Delta u_i'\} = [a_{i-1}]\{\Delta u_i\} \tag{51}$$

From these accelerated displacements $\{\Delta u_i'\}$, the initial stresses $\{\sigma_0\}$ are found and they are equilibrated with the forces $\{\psi_i\}$. They are then used for the next solution

$$\{\Delta \bar{u}_i\} = [k_0]^{-1}\{\psi_i\} \tag{52}$$

which results in a new set of acceleration factors. Now an estimate for the displacement increment is made in order to find the incremental stresses and total stresses.

The residual forces needed to re-establish equilibrium can now easily be evaluated

$$\{\hat{\psi}_i\} = \int_v [B]^{\mathrm{T}}\{\sigma_{0_{\mathrm{T}}}\}\mathrm{d}V - \{R_i\} \tag{53}$$

where $\{R_i\}$ represents the total external load; dV is the volume.

A new displacement now results from

$$\{\Delta u_{i+1}\} = -[k_0]^{-1}\{\hat{\psi}_i\} \tag{54}$$

In order to carry out these iterative steps, numerical integration is required. First of all the evaluation of $\{\hat{\psi}_i\}$ from the initial stresses is required, and this requires integration over the elastic–plastic region only. The value of $\{\hat{\psi}_i\}$ is computed by carrying out the integration over the entire domain of the analysis. Since these kinds of accelerated steps unbalance the equilibrium, it therefore has to be re-established by finding the residual forces $\{\hat{\psi}_i\}$. Since the state of stress produced by the accelerated displacements is not in balance with the residual forces of the previous iteration, the new residual forces $\{\hat{\psi}_i\}$ of Equation 54 must balance $\{\sigma_{\mathrm{T}}\}$ and $\{R_i\}$. Here the acceleration scheme is needed to preserve equilibrium, which will eventually make the equivalent forces over the whole region unnecessary. This is achieved by applying a uniform acceleration, i.e. the same acceleration factor $\bar{A}$ to all displacements, found by averaging the individual factors α_i

$$\bar{A} = \frac{1}{n}\sum_{i=1}^{n}\alpha_i \tag{55}$$

The force-displacement equation is then written by multiplying both sides with the scalar quantity $\bar{A}$ without disturbing the equilibrium:

$$\bar{A}\{\Delta u_i\} = [k_0]^{-1}\bar{A}\{\psi_i\} \tag{56}$$

Now to evaluate $\{\psi_{i+1}\}$, the previous values of $\{\psi_i\}$ must be multiplied by $\bar{A}$, and the previously accelerated forces from the initial stresses $\{\sigma_0\}$ must be included such that

$$\{\psi_{i+1}\} = \int_V [B]^{\mathrm{T}}\{\sigma_0\}\mathrm{d}V - (A - 1)\{\psi_{i-1}\} \tag{57}$$

Relevant computer programs for the finite element analysis

Abstracts from main program ISOPAR based on finite element analysis

PROGRAM F-ISOPAR

Three-dimensional finite element program

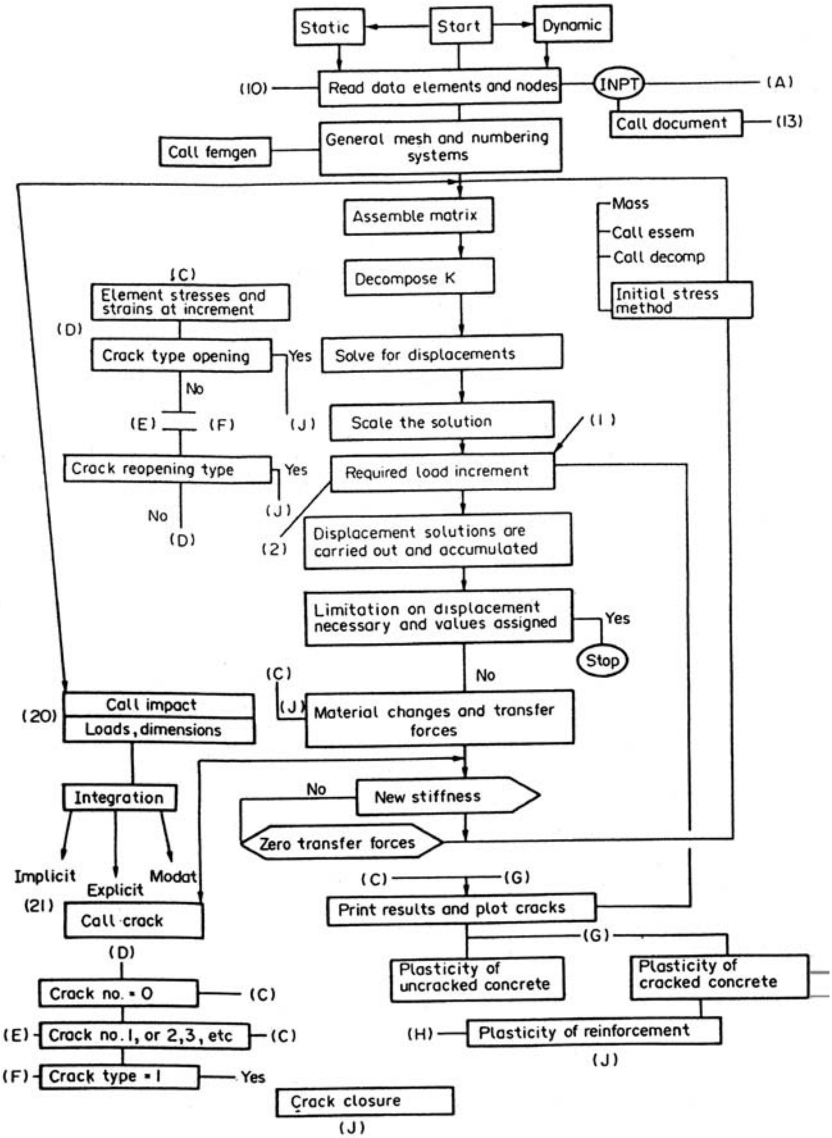

Additional References/Bibliography

1. BSI. *Safety Rules for the Construction and Installation of Escalators and Passenger Conveyors. BSEN* 115: 1995.
2. *Private Communications on Elevators*, OTIS CO. London 2001.
3. *Private Communications on Elevators*, Shindler Elevator and Escalator. Co. Vienna. Austria 2002.
4. *Private Communications on Elevators and Escalators*, Fujitec CO. Japan, 2002.
5. Corus. *Special Profiles on Elevator Guide Rail Systems*, West Bromwich, U.K. 2002.
6. Barney G.C.: *Remote Monitoring of Lifts, Escalators and Passenger Conveyors*. Int. Nat. Assn. of Elevator Engins.* 1990.
7. Strakosch G.R.: *Strakosch. Vertical Transportation-Elevators and Escalators*. Wiley and Sons 1968.
8. ASME. *Inspectors Manual for Electric Elevators.* A17.2.1, ASME 1996.
9. ASME. *Safety Codes for Elevators and Escalators.* A17.1, ASME, 1996.
10. ASME. *Check List for Inspection of Hydraulic Elevators.* A17.2.2, ASME 1998.
11. ASME. *Check List for Inspection and Test of Electric Elevators*. A17.2.1, ASME, 1994.
12. ASME. *Handbook on Safety Code for Elevators and Escalators*. A17.1, ASME, 1996.
13. Aberkrom, P.: *Results of Experimental Work on Traction Drives*. Elevator Technology 4. Proceedings of ELEVCON 92, Amsterdam, 1992.
14. Cholewa, W. and Hansel, J.: *Problem of Plastic Lining Application in Friction Drives*. Elevator Technology 4. Proceedings of ELEVCON 86, Nice, 1986.
15. de Crouy-Chanel, F.: *International Standardization in the Lift Industry*. Elevator Technology 4. Proceedings of ELEVCON 86, Nice, 1986.
16. Deimann, R.: *Experience with Rope Brakes.* Elevator Technology 4. Proceedings of ELEVCON 92, Amsterdam, 1992.
17. Distaso, C.: *Polyurethane Buffers.* Elevator Technology 3. Proceedings of ELEVCON 90, Rome, 1990.
18. Feyrer, K.: *Discard Criteria for Wire Ropes*. Elevator Technology 2. Proceedings of ELEVCON 88, Karlsruhe, 1988.
19. Franzen, C.F. and Englert, Th.: *Der Aufzugbau*. F. Vieweg & Sohn, Braunschweig, 1972.
20. Gibson, G.W.: *New Concepts in Traction Drives*. Proceedings of the International Lift Symposium, Amsterdam, 1984.
21. Gibson, G.W.: *Kinetic Energy of Passenger Elevator Door Systems.* ELEVATOR WORLD 12/1989 and 1/1990, Mobile, USA.
22. Hymans, F. and Hellborn, A.V.: Der neuzeitliche Aufzug mit *Treibscheibenatrieb.* Julius Springer, Berlin, 1927.
23. Janovský, L.: *Elevator Mechanical Design*. Ellis Horwood Ltd., Chichester, 1987.
24. Janovský, L.: *Stress Analysis in Guide Rails of Electric Elevators*. Technical University of Prague, dissertation, 1981.
25. Janovský, L.: *The Distribution of Tensile Forces in Elevator Ropes with Traction Drives and the Resultant Effect upon Wear of Sheave Grooves*. Proceedings of the International Lift Symposium, Amsterdam, 1984.
26. Janovský, L.: *Testing of Elevator Machines.* Proceedings of ELEVCON 88, Karlsruhe, 1988.
27. Janovský, L.: *Worldwide Standards for Guide Rail Calculations.* Elevator Technology 4. Proceedings of ELEVCON 92, Amsterdam, 1992.
28. Janovský, L. and Doležal. J.: *Výtahy a eskalátory.* SNTL, Prague, 1980.
29. Kamaike H., Ishii, T., Watanabe, E., Matsukura, Y.: *A Ropeless Linear Drive Elevator.* ELEVATOR WORLD 3/1991, Mobile, USA.
30. Kampers, P.: *The Best Elevator Rope.* Elevator Technology 4. Proceedings of ELEVCON 92, Amsterdam, 1992.
31. Laney, R. and McCallum, W.: *Whisperflex Compensating Cable*. Elevator Technology 4. Proceedings of ELEVCON 86, Nice, 1986.
32. Measuring Sound. Brochure of Bruel & Kjaer, Denmark, 1984.

33. Nederbragt, J.A.: *Emergency Rope Brake*. ELEVATOR WORLD 5/1985, Mobile, USA.
34. Nederbragt, J.A.: *Rope Brake as Precaution against Overspeed*. ELEVATOR WORLD 7/1989, Mobile, USA.
35. Niemann, G. and Winter, H.: *Maschinenelemente III*. Springer Verlag, Berlin, 1983.
36. Phillips, R.S.: *Electric Lifts.* Pitman Publishing, London, 1973.
37. Strakosch, G.: *Vertical Transportation: Elevators and Escalators*. 2nd Edition. John Wiley & Sons, New York, 1983.
38. Sturgeon, W.C.: *The LIM Elevator Drive*. ELEVATOR WORLD 3/1991, Mobile, USA.
39. *Terminology for Lifts, Escalators and Passenger Conveyors*. Federation Europeenne de la Manutention, Section VII, 1981.
40. *The Selection and Inspection of Elevator Ropes.* ELEVATOR WORLD Education Package, Mobile, USA.
41. Walker, H.: *The Thermal Rating of Worm Gearboxes.*
42. ANSI/AGMA 6034-A 87, *Practice for Enclosed Cylindrical Wormgear Speed Reducers and Gearmotors*, March, 1988.
43. Australian Standard AS 2759-1985, *Steel Wire Rope* – Application Guide.
44. Australian Standard AS 3569-1989, *Steel Wire Ropes*.
45. BS 5655: Part 1: 1979/EN 81: Part 1, Lifts and Service Lifts. Safety Rules for the Construction and Installation of Electric Lifts.
46. BS 5655: Part 5: 1981, Lifts and Service Lifts. Specification for Dimensions of Standard Electric Lifts Arrangements.
47. BS 5655: Part 9: 1985, Lifts and Service Lifts. *Specification for Guide Rails*.
48. ISO 4344. *Steel Wire Ropes for Lifts.*

Subject Index